MITSUBISHI ELECTRIC

INVERTER

A800-E / F800-E
ETHERNET FUNCTION MANUAL

Ethernet communication function

This manual explains the Ethernet communication specifications. For the functions not found in this manual, refer to the Instruction Manual (Detailed) of the FR-A800/FR-F800 inverter.
In addition to this manual, please read the Instruction Manual (Detailed) of the FR-A800/FR-F800 inverter carefully. Do not use this product until you have a full knowledge of the equipment, safety information and instructions.
Please forward this manual to the end user.

A800/F800

1 INTRODUCTION 2

1.1 Ethernet communication overview 2

1.2 Ethernet connector 3

1.3 Ethernet cable wiring precautions 4

1.4 Removal of the Ethernet board 5

2 PARAMETER 6

2.1 Parameter list (by parameter number) 6

2.2 Parameter list (by function group) 8

2.3 (D) Operation command and frequency command 9

2.3.1 Selection of the command source during communication operation 9

2.4 (M) Monitor display and monitor output signal 13

2.4.1 Output terminal function selection 13

2.5 (N) Operation via communication and its settings 14

2.5.1 Initial setting of operation via communication 15
2.5.2 Initial settings and specifications of Ethernet communication....20
2.5.3 MELSOFT / FA product connection....27
2.5.4 SLMP 28
2.5.5 CC-Link IE Field Network Basic....40
2.5.6 MODBUS/TCP....61
2.5.7 BACnet/IP 73

2.6 Inverter-to-inverter link function 85

3 PROTECTIVE FUNCTIONS 88

3.1 Causes and corrective actions 88

4 SPECIFICATIONS 89

4.1 Common specifications 89

4.2 Parameters (functions) and instruction codes under different control methods 93

5 Appendix 95

5.1 Instructions for CC-Link IE Field Network Basic 95

1 INTRODUCTION

1.1 Ethernet communication overview

The FR-A800-E/FR-F800-E inverter is equipped with an Ethernet board. Communication with network devices can be made via Ethernet by connecting an Ethernet cable to the Ethernet connector on the Ethernet board.

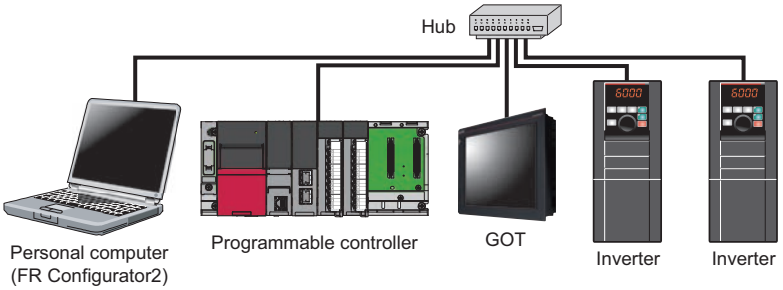

◆Precautions for Ethernet communication

- In order to protect the inverter and the system against unauthorized access by external systems via network, take security measures including firewall settings.
- Depending on the network environment, the inverter may not operate as intended due to delays or disconnection in communication. Carefully consider the conditions and safety for the inverter on site.

◆Abbreviations

Abbreviation / generic name	Description
DU	Operation panel (FR-DU08)
Operation panel	Operation panel (FR-DU08) and LCD operation panel (FR-LU08)
Parameter unit	Parameter unit (FR-PU07)
PU	Operation panel and parameter unit
Inverter	Mitsubishi Electric FR-A800-E/FR-F800-E inverter
Ethernet board	Ethernet communication board (FR-A8ETH)
Pr.	Parameter number (Number assigned to function)
SLMP	Seamless Message Protocol
iQSS	Mitsubishi Electric iQ Sensor Solution*1
TCP/IP	Transmission Control Protocol / Internet Protocol
UDP/IP	User Datagram Protocol / Internet Protocol

*1 The solution enables seamless sensor control using a programmable controller, GOT, and other devices. The iQSS contributes to the reduction in the total cost from development to maintenance of production equipment.

◆Trademarks

- Ethernet is a registered trademark of Fuji Xerox Corporation.
- MODBUS is a registered trademark of SCHNEIDER ELECTRIC USA, INC.
- BACnet is a registered trademark of the American Society of Heating, Refrigerating and Air-Conditioning Engineers (ASHRAE).

1.2 Ethernet connector

◆Ethernet communication specifications

Item	Description
Category	100BASE-TX/10BASE-T
Data transmission speed	100 Mbps (100BASE-TX) / 10 Mbps (10BASE-T)
Transmission method	Baseband
Maximum segment length	100 m between the hub and the inverter
Number of cascade connection stages	Up to 2 (100BASE-TX) / up to 4 (10BASE-T)
Interface	RJ-45
Number of interfaces available	1
IP version	IPv4

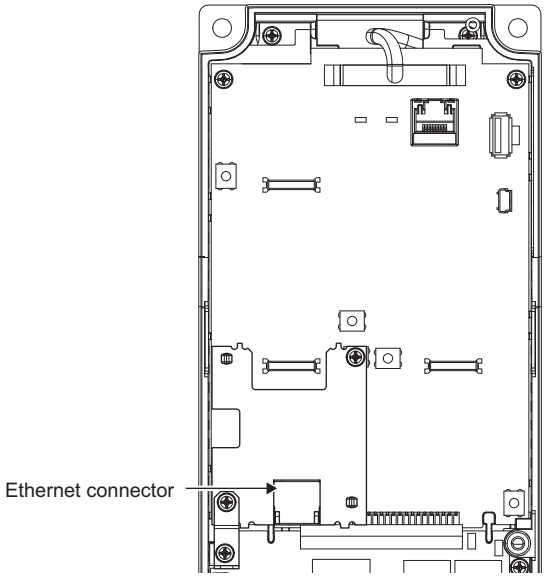

◆Connection cable

Use Ethernet cables compliant with the following standards.

Communication speed	Cable	Connector	Standard
100 Mbps	Category 5 or higher, (shielded / STP) straight cable	RJ-45 connector	100BASE-TX
10 Mbps	Category 3 or higher, (shielded / STP) straight cable		10BASE-T
	Category 3 or higher, (UTP) straight cable		

◆Hub

Use a hub that supports transmission speed of the Ethernet.

1.3 Ethernet cable wiring precautions

This section explains Ethernet cable connection and the relevant precautions.

◆Handling of the Ethernet cable

- Do not touch the conductors of the cable or the connector on the inverter. Keep the conductors free of dust or dirt. Handling the conductors with oily hands or dust/dirt adhesion to the conductors may cause transmission losses and impair normal data link operation.
- Check the Ethernet cable for the following points before use.
  - The cable is not broken.
  - The cable does not have a short circuit.
  - The connector is properly installed.
- Do not use an Ethernet cable with a broken latch. Doing so may cause the cable to come off or malfunction.
- Do not connect the Ethernet cable to the PU connector. The product could be damaged due to differences in electrical specifications.
- The maximum distance between stations is specified as 100 m. However, the maximum distance may be shorter depending on the environment. For details of the cable, contact your cable manufacturer.

◆Connecting and disconnecting of the Ethernet cable

Hold the cable connector when connecting and disconnecting the Ethernet cable. Pulling a cable connected to the inverter may damage the inverter or cable, or result in malfunction due to poor contact.

◆Network configuration

Check the network configuration before wiring, and perform correct wiring.

1.4 Removal of the Ethernet board

The option connector 2 is not available for use because the Ethernet board is installed in the initial status. The Ethernet board must be removed as follows to install a plug-in option to the option connector 2.
(However, Ethernet communication is disabled in that case.)

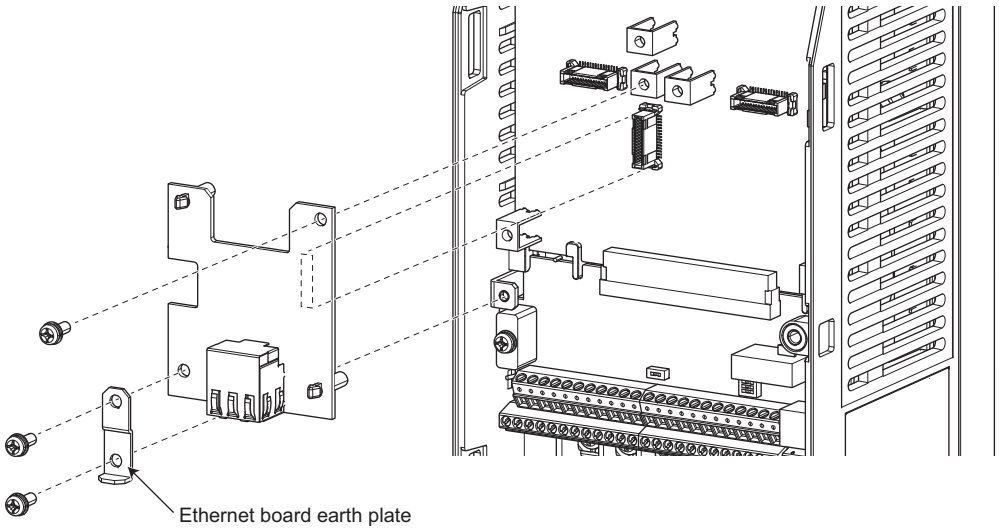

(1) Remove the inverter front cover. (For details on how to remove the front cover, refer to Chapter 2 of the inverter's Instruction Manual (Detailed).)

(2) Remove the three mounting screws to remove the Ethernet board earth plate and the Ethernet board.

NOTE

- For reinstalling the Ethernet board to the inverter, remove the plug-in option installed to the option connector 2 and install the Ethernet board and its earth plate in the reverse order.
- Remove the Ethernet board on the FR-A800-E inverter to install the FR-A8NS and FR-A8AP/FR-A8AL for the SSCNET III(/H) communication.

2 PARAMETER

2.1 Parameter list (by parameter number)

The following parameters are dedicated to Ethernet communication. Set the parameters according to application. For other parameters, refer to the Instruction Manual (Detailed) of the FR-A800/FR-F800 inverter.

Pr.	Pr. group	Name	Setting range	Minimum setting increments	Initial value		Refer to page	Customer setting
					FM	CA		
190	M400	RUN terminal function selection	242, 342*3	1	0		13	
191	M401	SU terminal function selection		1	1		13	
192	M402	IPF terminal function selection		1	2*1		13	
					9999*2		13	
193	M403	OL terminal function selection		1	3		13	
194	M404	FU terminal function selection		1	4		13	
195	M405	ABC1 terminal function selection		1	99		13	
196	M406	ABC2 terminal function selection		1	9999		13	
313	M410	DO0 output selection	242, 342*4	1	9999		13	
314	M411	DO1 output selection		1	9999		13	
315	M412	DO2 output selection		1	9999		13	
342	N001	Communication EEPROM write selection	0, 1	1	0		15	
349	—	Communication reset selection/Ready bit status selection	0, 1, 100, 101	1	0		15	
	N010	Communication reset selection	0, 1	1	0		15	
	N240	Ready bit status selection	0, 1	1	0		15	
390*6	N054*6	% setting reference frequency	1 to 590 Hz	0.01 Hz	60 Hz	50 Hz	73	
502	N013	Stop mode selection at communication error	0 to 4, 11*5, 12*5	1	0		15	
541	N100	Frequency command sign selection	0, 1	1	0		40	
544	N103	CC-Link extended setting	0, 1, 12, 14, 18, 24, 28, 100, 112, 114, 118, 128	1	0		40	
550	D012	NET mode operation command source selection	0, 1, 5, 9999	1	9999		9	
551	D013	PU mode operation command source selection	1 to 3, 5, 9999	1	9999		9	
728*6	N052*6	Device instance number (Upper 3 digits)	0 to 419 (0 to 418)	1	0		73	
729*6	N053*6	Device instance number (Lower 4 digits)	0 to 9999 (0 to 4302)	1	0		73	
779	N014	Operation frequency during communication error	0 to 590 Hz, 9999	0.01 Hz	9999		15	
804*5	D400*5	Torque command source selection	0 to 6	1	0		40	
810*5	H700*5	Torque limit input method selection	0 to 2	1	0		40	
1124	N681	Station number in inverter-to-inverter link	0 to 5, 9999	1	9999		85	
1125	N682	Number of inverters in inverter-to-inverter link system	2 to 6	1	2		85	
1424	N650	Ethernet communication network number	1 to 239	1	1		20	
1425	N651	Ethernet communication station number	1 to 120	1	1		20	
1426	N641	Link speed and duplex mode selection	0 to 4	1	0		20	
1427	N630	Ethernet function selection 1	502, 5000 to 5002, 5006 to 5008, 5010 to 5013, 9999, 45237, 47808*6, 61450	1	5001		20	
1428	N631	Ethernet function selection 2		1	45237		20	
1429	N632	Ethernet function selection 3		1	9999		20	
1431	N643	Ethernet signal loss detection function selection	0 to 3	1	0		20	
1432	N644	Ethernet communication check time interval	0 to 999.8 s, 9999	0.1 s	9999		20	
1434	N600	Ethernet IP address 1	0 to 255	1	192		20	
1435	N601	Ethernet IP address 2	0 to 255	1	168		20	
1436	N602	Ethernet IP address 3	0 to 255	1	50		20	

Pr.	Pr. group	Name	Setting range	Minimum setting increments	Initial value		Refer to page	Customer setting
					FM	CA		
1437	N603	Ethernet IP address 4	0 to 255	1	1		20	
1438	N610	Subnet mask 1	0 to 255	1	255		20	
1439	N611	Subnet mask 2	0 to 255	1	255		20	
1440	N612	Subnet mask 3	0 to 255	1	255		20	
1441	N613	Subnet mask 4	0 to 255	1	0		20	
1442	N660	Ethernet IP filter address 1	0 to 255	1	0		20	
1443	N661	Ethernet IP filter address 2	0 to 255	1	0		20	
1444	N662	Ethernet IP filter address 3	0 to 255	1	0		20	
1445	N663	Ethernet IP filter address 4	0 to 255	1	0		20	
1446	N664	Ethernet IP filter address 2 range specification	0 to 255, 9999	1	9999		20	
1447	N665	Ethernet IP filter address 3 range specification	0 to 255, 9999	1	9999		20	
1448	N666	Ethernet IP filter address 4 range specification	0 to 255, 9999	1	9999		20	
1449	N670	Ethernet command source selection IP address 1	0 to 255	1	0		20	
1450	N671	Ethernet command source selection IP address 2	0 to 255	1	0		20	
1451	N672	Ethernet command source selection IP address 3	0 to 255	1	0		20	
1452	N673	Ethernet command source selection IP address 4	0 to 255	1	0		20	
1453	N674	Ethernet command source selection IP address 3 range specification	0 to 255, 9999	1	9999		20	
1454	N675	Ethernet command source selection IP address 4 range specification	0 to 255, 9999	1	9999		20	
1455	N642	Keepalive time	1 to 7200 s	1 s	3600 s		20	

*1 The initial value is for standard models and IP55 compatible models.
*2 The initial value is for separated converter types.
*3 For the other settings, refer to the Instruction Manual (Detailed) of the FR-A800/FR-F800 inverter.
*4 The other available settings depend on the inverter. For details, refer to the description of **Pr.190 to Pr.196 (Output terminal function selection)** in the Instruction Manual (Detailed) of the FR-A800/FR-F800 inverter.
*5 The setting is available for the FR-A800-E only.
*6 The setting is available for the FR-F800-E only.

2.2 Parameter list (by function group)

◆D: Operation command and frequency command

Parameters that specify the inverter's command source, and parameters that set the motor driving frequency and torque.

Pr. group	Pr.	Name	Refer to page
D012	550	NET mode operation command source selection	9
D013	551	PU mode operation command source selection	9
D400*1	804*1	Torque command source selection	40

*1 The setting is available for the FR-A800-E only.

◆H: Protective function parameter

Parameters to protect the motor and the inverter.

Pr. group	Pr.	Name	Refer to page
H700*1	810*1	Torque limit input method selection	40

*1 The setting is available for the FR-A800-E only.

◆M: Monitor display and monitor output signal

Parameters regarding the inverter's operating status. These parameters are used to set the monitors and output signals.

Pr. group	Pr.	Name	Refer to page
M400	190	RUN terminal function selection	13
M401	191	SU terminal function selection	13
M402	192	IPF terminal function selection	13
M403	193	OL terminal function selection	13
M404	194	FU terminal function selection	13
M405	195	ABC1 terminal function selection	13
M406	196	ABC2 terminal function selection	13
M410	313	DO0 output selection	13
M411	314	DO1 output selection	13
M412	315	DO2 output selection	13

◆N: Operation via communication and its settings

Parameters for communication operation. These parameters set the communication specifications and operation.

Pr. group	Pr.	Name	Refer to page
N001	342	Communication EEPROM write selection	15
N010	349	Communication reset selection/ Ready bit status selection	15
N013	502	Stop mode selection at communication error	15
N014	779	Operation frequency during communication error	15
N052*1	728*1	Device instance number (Upper 3 digits)	73
N053*1	729*1	Device instance number (Lower 4 digits)	73
N054*1	390*1	% setting reference frequency	73
N100	541	Frequency command sign selection	40
N103	544	CC-Link extended setting	40
N240	349	Ready bit status selection	15
N600	1434	Ethernet IP address 1	20
N601	1435	Ethernet IP address 2	20
N602	1436	Ethernet IP address 3	20
N603	1437	Ethernet IP address 4	20
N610	1438	Subnet mask 1	20
N611	1439	Subnet mask 2	20
N612	1440	Subnet mask 3	20
N613	1441	Subnet mask 4	20
N630	1427	Ethernet function selection 1	20
N631	1428	Ethernet function selection 2	20
N632	1429	Ethernet function selection 3	20
N641	1426	Link speed and duplex mode selection	20
N642	1455	Keepalive time	20
N643	1431	Ethernet signal loss detection function selection	20
N644	1432	Ethernet communication check time interval	20
N650	1424	Ethernet communication network number	20
N651	1425	Ethernet communication station number	20
N660	1442	Ethernet IP filter address 1	20
N661	1443	Ethernet IP filter address 2	20
N662	1444	Ethernet IP filter address 3	20
N663	1445	Ethernet IP filter address 4	20
N664	1446	Ethernet IP filter address 2 range specification	20
N665	1447	Ethernet IP filter address 3 range specification	20
N666	1448	Ethernet IP filter address 4 range specification	20
N670	1449	Ethernet command source selection IP address 1	20
N671	1450	Ethernet command source selection IP address 2	20
N672	1451	Ethernet command source selection IP address 3	20
N673	1452	Ethernet command source selection IP address 4	20
N674	1453	Ethernet command source selection IP address 3 range specification	20
N675	1454	Ethernet command source selection IP address 4 range specification	20
N681	1124	Station number in inverter-to-inverter link	85
N682	1125	Number of inverters in inverter-to-inverter link system	85

*1 The setting is available for the FR-F800-E only.

2.3 (D) Operation command and frequency command

Purpose	Parameter to set			Refer to page
To select the command source during communication operation	Selection of the command source during communication operation	P.D012, P.D013	Pr.550, Pr.551	9
To select the torque command method in the torque control mode	Torque command source selection	P.D400	Pr.804	40

2.3.1 Selection of the command source during communication operation

When the Ethernet connector or a communication option is used, the command source in the network (NET) / PU operation mode can be selected.

Pr.	Name	Initial value	Setting range	Description
550 D012	NET mode operation command source selection	9999	0	The communication option is the command source when in the NET operation mode.
			1	For manufacturer setting. Do not set.
			5	The Ethernet connector is the command source when in the NET operation mode.
			9999	Communication option automatic recognition Normally, the Ethernet connector is the command source. When the communication option is mounted, the communication option is the command source.
551 D013	PU mode operation command source selection	9999	1	For manufacturer setting. Do not set.
			2	The PU connector is the command source when in the PU operation mode.
			3	The USB connector is the command source when in the PU operation mode.
			5	The Ethernet connector is the command source when in the PU operation mode.
			9999	USB automatic recognition Normally, the PU connector is the command source. When the USB is connected, the USB connector is the command source.

◆Selection of command source in the network (NET) operation mode (Pr.550)

- Either of the Ethernet connector or the communication option can be specified for the command source in the NET operation mode.
- For example, whether or not the communication option is mounted, set **Pr.550** = "5" to write parameters or input the start and frequency commands via the Ethernet connector in the NET operation mode.

NOTE

- In the initial setting, "9999" (communication option automatic recognition) is set for **Pr.550**. Thus, if the communication option is mounted, parameters cannot be written or the start and frequency commands cannot be sent by communications that use the Ethernet connector. (Monitoring or parameter reading can be performed.)

◆Selection of the command source of the PU operation mode (Pr.551)

- Any of the PU connector, Ethernet connector, or USB connector can be specified for the command source in the PU operation mode.
- In the PU operation mode, set **Pr.551** = "5" to write parameters or input the start and frequency commands via the Ethernet connector. Set **Pr.551** = "3 or 9999" to use the USB connector.

NOTE

- When **Pr.550** = "5" (NET operation mode, Ethernet connector) and **Pr.551** = "5" (PU operation mode, Ethernet connector), the PU operation mode has precedence.
- Changed setting values are enabled at power-ON or inverter reset.

Pr.550 setting	Pr.551 setting	Command source				Remarks
		PU connector	USB connector	Ethernet connector	Communication option	
0	2	PU operation mode	×	×	NET operation mode*1	
	3	×	PU operation mode	×	NET operation mode*1	
	5	×	×	PU operation mode	NET operation mode*1	
	9999 (initial value)	PU operation mode*2	PU operation mode*2	×	NET operation mode*1	
5	2	PU operation mode	×	NET operation mode	×	
	3	×	PU operation mode	NET operation mode	×	
	5	×	×	PU operation mode*3	×	Switching to NET operation mode disabled
	9999 (initial value)	PU operation mode*2	PU operation mode*2	NET operation mode	×	
9999 (initial value)	2	PU operation mode	×	×	NET operation mode*1	With communication option
				NET operation mode	×	Without communication option
	3	×	PU operation mode	×	NET operation mode*1	With communication option
				NET operation mode	×	Without communication option
	5	×	×	PU operation mode*3	NET operation mode*1	With communication option
					×	Without communication option
	9999 (initial value)	PU operation mode*2	PU operation mode*2	×	NET operation mode*1	With communication option
				NET operation mode	×	Without communication option

*1 If the communication option is not mounted, switching to the NET operation mode is not possible.

*2 When **Pr.551** = "9999", the priority of the PU command source is defined as follows: USB connector > PU connector.

*3 When the CC-Link IE Field Network Basic is used, the NET operation mode has precedence. However, the Ethernet connector is not used as the command source if a communication option is installed while **Pr.550** = "9999".

◆Controllability through communication

Command source	Condition (Pr.551 setting)	Item	Controllability in each operation mode					
			PU operation	External (EXT) operation	EXT/PU combined operation mode 1 (Pr.79 = 3)	EXT/PU combined operation mode 2 (Pr.79 = 4)	NET operation (when the Ethernet connector is used)*6	NET operation (when a communication option is used)*7
Control by RS-485 communication via PU connector	2 (PU connector) 9999 (automatic recognition, without USB connection)	Operation (start) command	○	×	×	○	×	
		Operation (stop) command	○	Δ*3	Δ*3	○	Δ*3	
		Running frequency	○	×	○	×	×	
		Monitor	○	○	○	○	○	
		Parameter write	○*4	×*5	○*4	○*4	×*5	
		Parameter read	○	○	○	○	○	
		Inverter reset	○	○	○	○	○	
	Other than the above	Operation (start) command	×	×	×	×	×	
		Operation (stop) command	Δ*3	Δ*3	Δ*3	Δ*3	Δ*3	
		Running frequency	×	×	×	×	×	
		Monitor	○	○	○	○	○	
		Parameter write	×*5	×*5	×*5	×*5	×*5	
		Parameter read	○	○	○	○	○	
		Inverter reset	○	○	○	○	○	
Control via USB connector	3 (USB connector) 9999 (automatic recognition, with USB connection)	Operation command (start, stop)	○	×	×	○	×	
		Running frequency	○	×	○	×	×	
		Monitor	○	○	○	○	○	
		Parameter write	○*4	×*5	○*4	○*4	×*5	
		Parameter read	○	○	○	○	○	
		Inverter reset	○	○	○	○	○	
	Other than the above	Operation command (start, stop)	×	×	×	×	×	
		Running frequency	×	×	×	×	×	
		Monitor	○	○	○	○	○	
		Parameter write	×*5	×*5	×*5	×*5	×*5	
		Parameter read	○	○	○	○	○	
		Inverter reset	○	○	○	○	○	
Control by communication via Ethernet board	5 (Ethernet board)	Operation command (start, stop)	○	×	×	○	×	
		Running frequency	○	×	○	×	×	
		Monitor	○	○	○	○	○	
		Parameter write	○*4	×*5	○*4	○*4	×*5	
		Parameter read	○	○	○	○	○	
		Inverter reset	○	○	○	○	○	
	Other than the above or when the CC-Link IE Field Network Basic is selected	Operation command (start, stop)	×	×	×	×	○*1	×
		Running frequency	×	×	×	×	○*1	×
		Monitor	○	○	○	○	○	○
		Parameter write	×*5	×*5	×*5	×*5	○*4	×*5
		Parameter read	○	○	○	○	○	○
		Inverter reset	×	×	×	×	○*2	×
communication option (via communication)	—	Operation command (start, stop)	×	×	×	×	×	○*1
		Running frequency	×	×	×	×	×	○*1
		Monitor	○	○	○	○	○	○
		Parameter write	×*5	×*5	×*5	×*5	×*5	○*4
		Parameter read	○	○	○	○	○	○
		Inverter reset	×	×	×	×	×	○*2
External terminal at the control circuit	—	Inverter reset	○	○	○	○	○	
		Operation command (start, stop)	×	○	○	×	×*1	
		Frequency setting	×	○	×	○*8	×*1	

○: Valid ×: Invalid Δ: Partially valid

(D) Operation command and frequency command

*1 The operation is as set in **Pr.338 Communication operation command source** and **Pr.339 Communication speed command source**. (Refer to the Instruction Manual (Detailed) of the FR-A800/FR-F800 inverter.)
*2 At occurrence of communication error, the inverter cannot be reset.
*3 Enabled only when stopped by the PU. "PS" is displayed on the operation panel for the PU stop. The operation is as set in **Pr.75 Reset selection/disconnected PU detection/PU stop selection**. (Refer to the Instruction Manual (Detailed) of the FR-A800/FR-F800 inverter.)
*4 Writing of some parameters may be disabled by the **Pr.77 Parameter write selection** setting and the operating condition. (Refer to the Instruction Manual (Detailed) of the FR-A800/FR-F800 inverter.)
*5 Some parameters are write-enabled independently of the operation mode and command source presence/absence. Writing is also enabled when **Pr.77** = "2". (Refer to the Instruction Manual (Detailed) of the FR-A800/FR-F800 inverter.) Parameter clear is disabled.
*6 Applicable when **Pr.550 NET mode operation command source selection** = "5" (Ethernet connector enabled), or **Pr.550 NET mode operation command source selection** = "9999" with no communication option connected
*7 Applicable when **Pr.550 NET mode operation command source selection** = "0 (communication option enabled)", or **Pr.550 NET mode operation command source selection** = "9999" with communication option connected
*8 The frequency can be set by multi-speed setting or input through terminal 4.

◆Operation at fault

Fault record	Condition (Pr.551 setting)	Operation in each operation mode at error occurrences					
		PU operation	External (EXT) operation	EXT/PU combined operation mode 1 (Pr.79 = 3)	EXT/PU combined operation mode 2 (Pr.79 = 4)	NET operation (when the Ethernet connector is used)*5	NET operation (when a communication option is used)*6
Inverter fault	—	Stop					
PU connector disconnection	2 (PU connector) 9999 (automatic recognition)	Stop/continued*1*4					
	Other than 2	Stop/continued*1					
Communication error at PU connector	2 (PU connector)	Stop/ continued*2	Continued		Stop/ continued*2	Continued	
	Other than 2	Continued					
Communication error at USB connector	3 (USB connector) 9999 (automatic recognition)	Stop/ continued*2	Continued				
	Other than 3	Continued					
Communication error at Ethernet board	5 (Ethernet board)	Stop/ continued*2	Continued		Stop/ continued*2	Continued	
	Other than 5 or when the CC-Link IE Field Network Basic is selected	Continued				Stop/continued*2	Continued
Communication error at communication option	—	Continued					Stop/continued*3

*1 Selectable with **Pr.75 Reset selection/disconnected PU detection/PU stop selection**
*2 Selectable with **Pr.122 PU communication check time interval, Pr.548 USB communication check time interval,** and **Pr.1432 Ethernet communication check time interval**
*3 The operation depends on the communication option setting.
*4 In the PU JOG operation mode, the operation always stops when the PU is disconnected. The operation at a PU disconnection fault (E.PUE) occurrence is as set in **Pr.75 Reset selection/disconnected PU detection/PU stop selection**.
*5 Applicable when **Pr.550 NET mode operation command source selection** = "5" (Ethernet connector enabled), or **Pr.550 NET mode operation command source selection** = "9999" with no communication option connected
*6 Applicable when **Pr.550 NET mode operation command source selection** = "0 (communication option enabled)", or **Pr.550 NET mode operation command source selection** = "9999" with communication option connected

2.4 (M) Monitor display and monitor output signal

Purpose	Parameter to set			Refer to page
To assign functions to the output terminals	Output terminal function assignment	P.M400 to P.M406, P.M410 to P.M412	Pr.190 to Pr.196, Pr.313 to Pr.315	13

2.4.1 Output terminal function selection

Use the following parameters to change the functions of the open collector output terminals, relay output terminals, or virtual terminals of CC-Link IE Field Network Basic.

Pr.	Name		Initial value	Initial set signal	Setting range
190 M400	RUN terminal function selection	Open collector output terminal	0	RUN (Inverter running)	Inverter-to-inverter linkup (LNK) signal: 242 (positive logic), 342 (negative logic)*3
191 M401	SU terminal function selection		1	SU (Up to frequency)	
192 M402	IPF terminal function selection		2*1	IPF (Instantaneous power failure/undervoltage)	
			9999*2	No function	
193 M403	OL terminal function selection		3	OL (Overload warning)	
194 M404	FU terminal function selection		4	FU (Output frequency detection)	
195 M405	ABC1 terminal function selection	Relay output terminal	99	ALM (Fault)	
196 M406	ABC2 terminal function selection		9999	No function	
313 M410*5	DO0 output selection		9999	No function	Inverter-to-inverter linkup (LNK) signal: 242 (positive logic), 342 (negative logic)*4
314 M411*5	DO1 output selection		9999	No function	
315 M412*5	DO2 output selection		9999	No function	

*1 The initial value is for standard models and IP55 compatible models.
*2 The initial value is for separated converter types.
*3 For the other settings, refer to the Instruction Manual (Detailed) of the FR-A800/FR-F800 inverter.
*4 The other available settings depend on the inverter. For details, refer to the description of **Pr.190 to Pr.196 (Output terminal function selection)** in the Instruction Manual (Detailed) of the FR-A800/FR-F800 inverter.
*5 The parameter is used when the CC-Link IE Field Network Basic is selected. (Refer to page 46.)

◆Inverter-to-inverter linkup (LNK) signal

- The Inverter-to-inverter linkup (LNK) signal is available to check that the master-slave communication is established. (For the details of the inverter-to-inverter link function, refer to page 85.)

Master/slave	Signal ON condition	Signal OFF condition
Master	The inverter receives a response from all the slave inverters during initial communication.	• The inverter does not receive a response from a slave in communication. • The inverter detects a signal loss.
Slave	The inverter returns a response to the master.	• The inverter does not receive any request from the master. • The inverter detects a signal loss.

- To use the LNK signal, set "242 (positive logic) or 342 (negative logic)" in any of **Pr.190 to Pr.196 (Output terminal function selection)** to assign the function to the output terminal.

NOTE

- Changing the terminal assignment using **Pr.190 to Pr.196 (Output terminal function selection)** may affect the other functions. Set parameters after confirming the function of each terminal.

2.5 (N) Operation via communication and its settings

Purpose	Parameter to set			Refer to page
To start operation via communication	Initial setting of operation via communication	P.N001, P.N010, P.N013, P.N014, P.N240	Pr.342, Pr.349, Pr.502, Pr.779	15
To communicate via Ethernet connector	Initial setting of Ethernet communication	P.N600 to P.N603, P.N610 to P.N613, P.N630 to P.N632, P.N641 to P.N644, P.N650, P.N651, P.N660 to P.N666, P.N670 to P.N675	Pr.1424 to Pr.1429, Pr.1431, Pr.1432, Pr.1434 to Pr.1455	20
	BACnet/IP	P.N052 to P.N054	Pr.390, Pr.728, Pr.729	73
	CC-Link IE Field Network Basic	P.N100, P.N103, P.D400, P.H700	Pr.541, Pr.544, Pr.804, Pr.810	40
Operation via communication using the inverter-to-inverter link function	Inverter-to-inverter link function	P.N681, P.N682	Pr.1124, Pr.1125	85

2.5.1 Initial setting of operation via communication

Set the action at fault occurrence or at writing of parameters when the inverter is performing operation via communication.

Pr.	Name	Initial value	Setting range	Description	
342 N001	Communication EEPROM write selection	0	0	Parameter values are written to the EEPROM and RAM by communication.	
			1	Parameter values are written to the RAM only by communication.	
349*3	Communication reset selection/Ready bit status selection	0	0	Enables the error reset function in any operation mode.	
			1	Enables the error reset function only in the Network operation mode.	
			100, 101	The status of Ready bit in communication data can be changed when a communication option is installed.	
N010*3	Communication reset selection	0	0	Enables the error reset function in any operation mode.	
			1	Enables the error reset function only in the Network operation mode.	
N240*3	Ready bit status selection	0	0	The status of Ready bit in communication data can be changed when a communication option is installed.	
			1		
502 N013*2	Stop mode selection at communication error	0	0	**Inverter operation when a communication error occurs**	**Inverter operation after a communication error is cleared**
				Output shutoff "E.EHR" indication*1 ALM signal output	Output stop status continues. ("E.EHR" indication*1)
			1	Output to decelerate and stop the motor "E.EHR" indication after stop*1 ALM signal output after stop	Output stop status continues. ("E.EHR" indication*1)
			2	Output to decelerate and stop the motor "E.EHR" indication after stop*1	Restart
			3	Operation continues at the frequency set in **Pr.779**.	Normal
			4	Operation continues at the frequency set in **Pr.779**. "CF" warning indication	Normal
			11*4	Deceleration stop according to the setting of **Pr.111**. "E.EHR" indication after stop*1 ALM signal output after stop	Output stop status continues. ("E.EHR" indication*1)
			12*4	Deceleration stop according to the setting of **Pr.111**. "E.EHR" indication after stop*1	Restart
779 N014	Operation frequency during communication error	9999	0 to 590 Hz	Set the frequency for the operation when a communication error occurs.	
			9999	Operation continues at the same frequency before the communication error.	

*1 If in communication by the communication option, the "E.OP1" indication is displayed.

*2 The parameter setting is valid when **Pr.1431 Ethernet signal loss detection function selection** = "3" or **Pr.1432 Ethernet communication check time interval** ≠ "9999" during Ethernet communication.

*3 The parameter is used when the CC-Link IE Field Network Basic is selected. (Refer to page 40.)

*4 The setting is available for the FR-A800-E only.

◆Communication EEPROM write selection (Pr.342)

- When parameter write is performed via the inverter PU connector, USB communication, the Ethernet connector, or a communication option, the parameters storage device setting can be switched to RAM only from both EEPROM and RAM. Use this function if parameter settings are changed frequently.
- When changing the parameter values frequently, set "1" in **Pr.342 Communication EEPROM write selection** to write them to the RAM only. The life of the EEPROM will be shorter if parameter write is performed frequently with the setting unchanged from "0 (initial value)" (EEPROM write).

NOTE

- Turning OFF the inverter's power supply clears the modified parameter settings when **Pr.342** = "1" (write to RAM only). Therefore, the parameter values at next power-ON are the values last stored in EEPROM.
- The parameter setting written in RAM cannot be checked on the operation panel. (The values displayed on the operation panel are the ones stored in EEPROM.)

◆Operation selection at a communication error (Pr.502, Pr.779)

- For communication via the Ethernet connector or a communication option, operation at a communication error can be selected. The operation is active under the Network operation mode.
- The operation at a communication error can be selected with **Pr.502** when **Pr.1431 Ethernet signal loss detection function selection** = "3" or **Pr.1432 Ethernet communication check time interval** ≠ "9999" during Ethernet communication.
- When a communication error is detected during communication via the Ethernet connector while **Pr.1431 Ethernet signal loss detection function selection** = "2 or 3", the alarm (LF) signal is output via an output terminal of the inverter. For the LF signal, set "98 (positive logic) or 198 (negative logic)" in any of **Pr.190 to Pr.196 (Output terminal function selection)** to assign the function to the output terminal. (While communication is performed with a communication option, the LF signal is output only when "3 or 4" is set in **Pr.502**.)

<table>
<tr><th rowspan="2">Fault record</th><th rowspan="2">Pr.502 setting</th><th colspan="3">At fault occurrence</th><th colspan="3">At fault removal</th></tr>
<tr><th>Operation</th><th>Indication</th><th>Fault (ALM) signal</th><th>Operation</th><th>Indication</th><th>Fault (ALM) signal</th></tr>
<tr><td rowspan="5">Communication line</td><td>0 (initial value)</td><td>Output shutoff</td><td>"E. EHR"*1</td><td>ON</td><td rowspan="2">Output stop status continues.</td><td rowspan="2">"E. EHR"*1</td><td rowspan="2">ON</td></tr>
<tr><td>1, 11</td><td rowspan="2">Output to decelerate and stop the motor</td><td rowspan="2">"E.EHR" after stop*1</td><td>ON after stop</td></tr>
<tr><td>2, 12</td><td rowspan="3">OFF</td><td>Restart*3</td><td rowspan="3">Normal</td><td rowspan="3">OFF</td></tr>
<tr><td>3</td><td>Operation continues at the frequency set in Pr.779.*2</td><td>Normal</td><td rowspan="2">Normal</td></tr>
<tr><td>4</td><td>"CF" warning</td></tr>
<tr><td rowspan="3">Communication option (when a communication option is used)</td><td>0, 3</td><td>Output shutoff</td><td>"E. 1"</td><td>ON</td><td rowspan="2">Output stop status continues.</td><td rowspan="2">"E. 1"</td><td rowspan="2">ON</td></tr>
<tr><td>1, 2, 11, 12</td><td>Output to decelerate and stop the motor</td><td>"E. 1" after stop</td><td>ON after stop</td></tr>
<tr><td>4</td><td>Operation continues at the frequency set in Pr.779.*2</td><td>"CF" warning</td><td>OFF</td><td>Operation continues at the frequency set in Pr.779.</td><td>"CF" warning</td><td>OFF</td></tr>
</table>

*1 If in communication by the communication option, the "E.OP1" indication is displayed.
*2 Under position control, the operation is continued to the target position.
*3 When the communication error is removed during deceleration, the motor re-accelerates. Under position control, the motor does not re-accelerate even when the communication error is removed during deceleration.

- The motor is decelerated to a stop according to the setting of **Pr.111 Third deceleration time** when an error occurs while **Pr.502** = "11 or 12".

Pr.502 setting	Operation to a stop at a communication error occurrence
0	Output shutoff
1 to 4	Deceleration stop according to the selected deceleration time (selectable using the RT or X9 signal)
11, 12	Deceleration stop according to the setting of **Pr.111**

- The following charts show operations when a communication line error occurs.

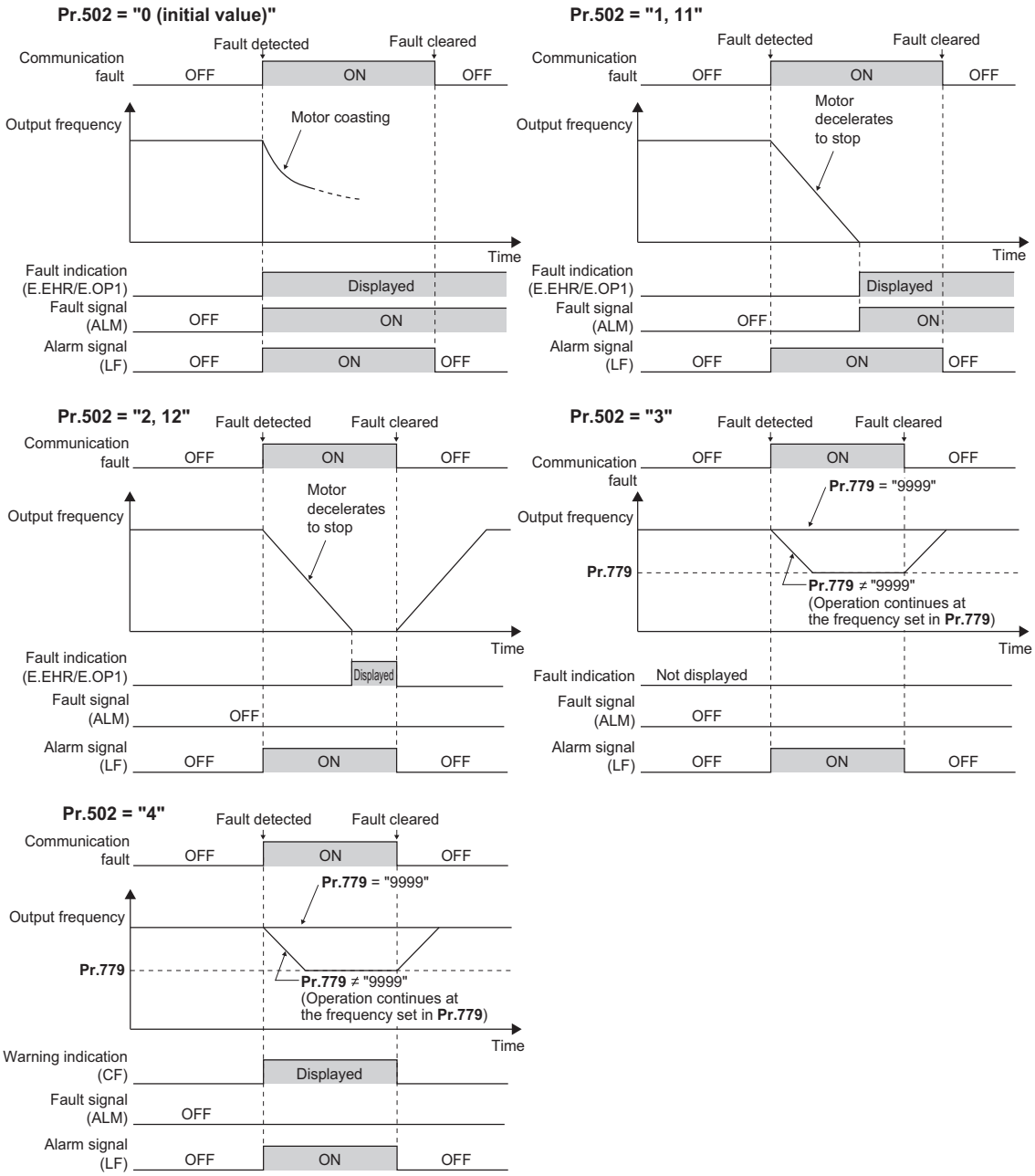

NOTE

- When the **Pr.1431** setting is changed to a value other than "3" after the operation defined by the **Pr.502** setting starts, the operation will be changed according to the **Pr.1431** setting.

(N) Operation via communication and its settings

- The following charts show operations when a communication option is used and a fault occurs.

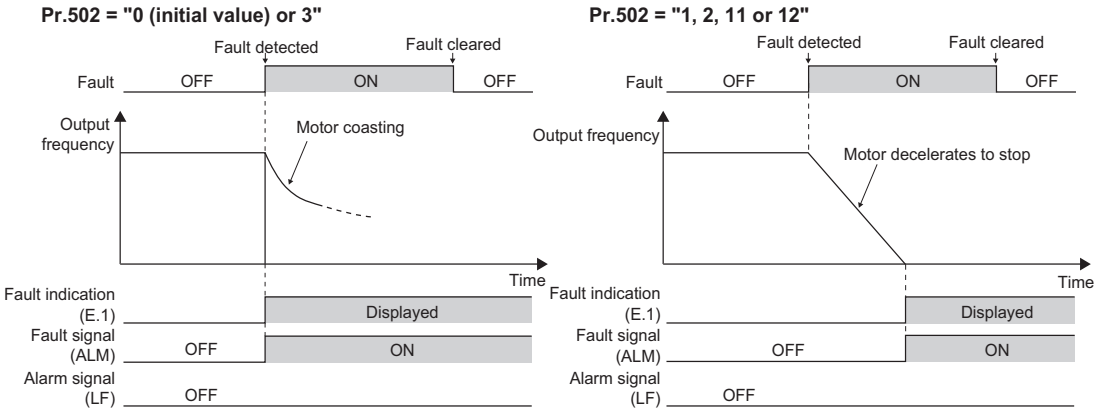

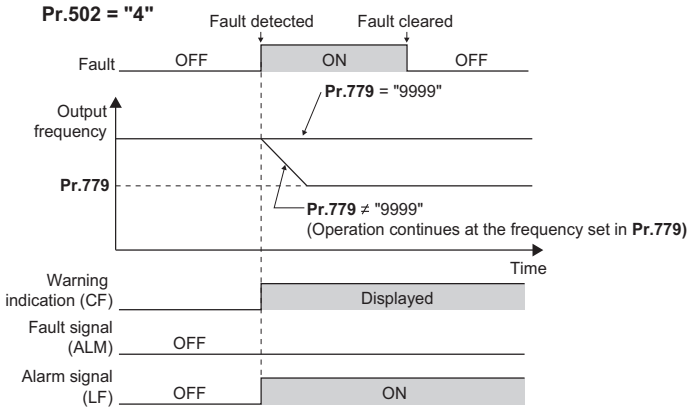

NOTE

- When a communication option is used, the protective function [E.OP1 (fault data: HA1)] is activated at error occurrences on the communication line. The protective function [E.1 (fault data: HF1)] is activated at error occurrences in the communication circuit inside the option.
- Fault output indicates the Fault (ALM) signal and an alarm bit output.
- When the fault output is set enabled, fault records are stored in the fault history. (A fault record is written to the fault history at a fault output.)
- When the fault output is not set enabled, fault record is overwritten to the fault history of the fault history temporarily but not stored.
- After the fault is removed, the fault indication goes back to normal indication on the monitor, and the fault history goes back to the previous status.
- When **Pr.502** = "1 to 4", the normal deceleration time setting (settings of **Pr.8**, **Pr.44**, and **Pr.45**, etc.) is applied as the deceleration time. Normal acceleration time setting (settings of **Pr.7** and **Pr.44**, etc.) is applied as the acceleration time for restart.
- When **Pr.502** = "2, 3, 4 or 12", the inverter operates with the start command and the speed command, which were used before the fault.
- If a communication line error occurs, then the error is removed during deceleration while **Pr.502** = "2 or 12", the motor re-accelerates from that point. (When a communication option is used, acceleration does not restart at a communication option error.)
- The **Pr.502** and **Pr.779** settings are valid when communication is performed via the Ethernet connector or a communication option.
- These parameters are valid under the Network operation mode. When performing communication via the Ethernet connector, set **Pr.551 PU mode operation command source selection** ≠ "5".
- **Pr.502** is valid for the device that has the command source under the Network operation mode. If a communication option is installed while **Pr.550** = "9999 (initial value)", an Ethernet connector communication error occurs and **Pr.502** becomes invalid.
- If the communication error setting is disabled with the settings of **Pr.502** = "3 or 4" and **Pr.1432** = "9999", the inverter does not continue its operation at the frequency set in **Pr.779** when a communication error occurs.
- If a communication error occurs while continuous operation at the frequency set in **Pr.779** is selected with **Pr.502** = "3 or 4", the inverter operates at the frequency set in **Pr.779** even though the speed command source is at the external terminals. Example) If a communication error occurs while **Pr.339** = "2" and the RL signal is input through an external terminal, the operation is continued at the frequency set in **Pr.779**.
- During position control, an error occurs even if "2 or 12" is set in **Pr.502**.

⚠ CAUTION

- **When Pr.502 = "3" and a communication line error occurs, or Pr.502 = "4" and a communication line error or a communication option fault occurs, the operation continues. When setting "3 or 4" in Pr.502, provide a safety stop countermeasure other than via communication. For example, input a signal (RES, MRS, or X92) through an external terminal or press the PU stop on the operation panel.**

◆Error reset operation selection at inverter fault (Pr.349)

- In the External operation mode or the PU operation mode, use this parameter to disable an error reset command sent through the Ethernet network (CC-Link IE Field Network Basic) or from a communication option.

Pr.349 setting	Description
0 (initial value)	Error reset is enabled independently of operation mode
1	Error reset is enabled only in the network operation mode
100, 101	The status of Ready bit in communication data can be changed when a communication option is installed. (Refer to the Instruction Manual (Detailed).)

◆Operation mode switching and communication startup mode (Pr.79, Pr.340)

- Check the following before switching the operation mode.
  - The inverter is at a stop.
  - Both the STF and STR signals are off.
  - The **Pr.79 Operation mode selection** setting is correct. (Check the setting on the operation panel of the inverter.)
- The operation mode at power ON and at restoration from instantaneous power failure can be selected. Set a value other than "0" in **Pr.340 Communication startup mode selection** to select the Network operation mode.
- After the inverter starts up in the Network operation mode, parameter write can be commanded via the network.

NOTE

- The changed value in **Pr.340** is applied after the next power-ON or inverter reset.
- The **Pr.340** setting can be changed on the operation panel in any operation mode.
- When setting a value other than "0" in **Pr.340**, make sure that the communication settings of the inverter are correct.

Parameters referred to

Pr.7 Acceleration time, Pr.8 Deceleration time, Pr.111 Third deceleration time ☞ **Instruction Manual (Detailed) of the FR-A800/FR-F800 inverter**
Pr.79 Operation mode selection ☞ **Instruction Manual (Detailed) of the FR-A800/FR-F800 inverter**
Pr.340 Communication startup mode selection ☞ **Instruction Manual (Detailed) of the FR-A800/FR-F800 inverter**
Pr.550 NET mode operation command source selection ☞ page 9
Pr.551 PU mode operation command source selection ☞ page 9
Pr.1431 Ethernet signal loss detection function selection ☞ page 20
Pr.1432 Ethernet communication check time interval ☞ page 20

2.5.2 Initial settings and specifications of Ethernet communication

Use the following parameters to perform required settings for Ethernet communication between the inverter and other devices.
To make communication between other devices and the inverter, perform the initial settings of the inverter parameters to match the communication specifications of the devices. Data communication cannot be made if the initial settings are not made or if there is any setting error.

Pr.	Name	Initial value	Setting range	Description
1434 N600*1	Ethernet IP address 1	192	0 to 255	Enter the IP address of the inverter to be connected to Ethernet.
1435 N601*1	Ethernet IP address 2	168		
1436 N602*1	Ethernet IP address 3	50		
1437 N603*1	Ethernet IP address 4	1		
1438 N610*1	Subnet mask 1	255	0 to 255	Enter the subnet mask of the network to which the inverter belongs.
1439 N611*1	Subnet mask 2	255		
1440 N612*1	Subnet mask 3	255		
1441 N613*1	Subnet mask 4	0		
1427 N630*1	Ethernet function selection 1	5001	502, 5000 to 5002, 5006 to 5008, 5010 to 5013, 9999, 45237, 47808*2, 61450	Set the application, protocol, etc.
1428 N631*1	Ethernet function selection 2	45237		
1429 N632*1	Ethernet function selection 3	9999		
1426 N641*1	Link speed and duplex mode selection	0	0 to 4	Set the communication speed and the communication mode (full-duplex/half-duplex).
1455 N642	Keepalive time	3600 s	1 to 7200 s	When no response is returned for an alive check message (KeepAlive ACK) for the time (s) set in **Pr.1455** multiplied by 4 elapsed, the connection will be forced to be closed.
1431 N643	Ethernet signal loss detection function selection	0	0	Signal loss detection disabled Set the availability of the signal loss detection and select the action when Ethernet communication is interrupted by physical factors.
			1	A warning (EHR) is output for a signal loss.
			2	A warning (EHR) and the Alarm (LF) signal are output for a signal loss
			3	A protective function (E.EHR) is activated for a signal loss.
1432 N644	Ethernet communication check time interval	9999	0	Ethernet communication is available, but the inverter trips in the NET operation mode.
			0.1 to 999.8 s	Set the interval of the communication check (signal loss detection) time for all devices with IP addresses in the range specified for Ethernet command source selection (**Pr.1449 to Pr.1454**). If a no-communication state persists for the permissible time or longer, the inverter will trip.
			9999	No communication check (signal loss detection)
1424 N650*1	Ethernet communication network number	1	1 to 239	Enter the network number.
1425 N651*1	Ethernet communication station number	1	1 to 120	Enter the station number.

Pr.	Name	Initial value	Setting range	Description
1442 N660*1	Ethernet IP filter address 1	0	0 to 255	Set the range of connectable IP addresses for the network devices. (When **Pr.1442 to Pr.1445** = "0 (initial value)", the function is invalid.)
1443 N661*1	Ethernet IP filter address 2	0		
1444 N662*1	Ethernet IP filter address 3	0		
1445 N663*1	Ethernet IP filter address 4	0		
1446 N664*1	Ethernet IP filter address 2 range specification	9999	0 to 255, 9999	
1447 N665*1	Ethernet IP filter address 3 range specification	9999		
1448 N666*1	Ethernet IP filter address 4 range specification	9999		
1449 N670*1	Ethernet command source selection IP address 1	0	0 to 255	To limit the network devices that send the operation or speed command through the Ethernet network (MODBUS/TCP, BACnet/IP or CC-Link IE Field Network Basic), set the range of IP addresses of the devices. When **Pr.1449 to Pr.1452** = "0 (initial value)", no IP address is specified for sending commands through the Ethernet network. In this case, operation through the Ethernet network (MODBUS/TCP, BACnet/IP or CC-Link IE Field Network Basic) is not available. When four or more clients attempt a connection to the inverter during MODBUS/TCP communication, the connection attempted from outside of the IP address range set for Ethernet command source selection may be forced to be closed.
1450 N671*1	Ethernet command source selection IP address 2	0		
1451 N672*1	Ethernet command source selection IP address 3	0		
1452 N673*1	Ethernet command source selection IP address 4	0		
1453 N674*1	Ethernet command source selection IP address 3 range specification	9999	0 to 255, 9999	
1454 N675*1	Ethernet command source selection IP address 4 range specification	9999		

*1 The setting is applied after an inverter reset or power-ON.
*2 The setting is available for the FR-F800-E only.

NOTE

- The monitored items and parameter settings can be read during communication with the **Pr.1432 Ethernet communication check time interval** = "0" setting, but an inverter fault occurs instantly when the operation mode is switched to the NET operation mode. When the NET operation mode is selected as the start-up operation mode, communication is performed once, then an Ethernet communication fault (E.EHR) occurs.
  To perform operation or parameter writing via communication, set **Pr.1432** to "9999" or a value larger than the communication cycle or retry time setting. (Refer to page 26.)

◆Ethernet function selection (Pr.1427 to Pr.1429)

Refer to the Instruction Manual of the device connected via Ethernet, and set **Pr.1427 to Pr.1429 Ethernet function selection 1 to 3** according to the application and protocol.

A communication socket is provided only for the selected application.

Pr.1427 to Pr.1429 setting	Application*1	Protocol*1	Number of connectable clients	Refer to page
502	MODBUS/TCP	TCP/IP	3	61
5000	MELSOFT / FA product connection	UDP/IP	No limit	27
5001 (**Pr.1427** initial value)*2				
5002*2		TCP/IP	1*3	
5006		UDP/IP	No limit	
5007		TCP/IP	1*3	
5008		UDP/IP	No limit	
5010	SLMP	UDP/IP	No limit	28
5011				
5012		TCP/IP	1*3	
5013				
45237 (**Pr.1428** setting)	iQSS (supported by FR Configurator2)	UDP/IP	No limit	—
47808*4	BACnet/IP	UDP/IP	No limit	73
61450	CC-Link IE Field Network Basic	UDP/IP	No limit	40
9999 (**Pr.1429** initial value)	Unselected			—

*1 If both application and protocol settings are identical in **Pr.1427 to Pr.1429**, the priority of the setting is defined as follows: **Pr.1427** > **Pr.1428** > **Pr.1429**.
(Example) When **Pr.1427** = "5001", **Pr.1428** = "5006", **Pr.1429** = "5013", "5001" and "5013" are valid.

*2 To connect the inverter and FR Configurator2 via the MELSOFT / FA product for Ethernet communication, set "5001 (initial value)" or "5002" according to the protocol type (UDP/IP or TCP/IP) in any of **Pr.1427 to Pr.1429**.

*3 When the inverter is connected with other equipment via a hub, and if the communication between the other equipment and the hub is interrupted and resumed, the communication between the inverter and the other equipment may not be established depending on the specifications of the hub. To re-establish communication with the other equipment, reset the inverter to forcefully close the connection. (Setting a shorter time in **Pr.1455 Keepalive time** is also effective as a preventive measure (refer to page 23).)

*4 The setting is available for the FR-F800-E only.

◆Communication speed and full-duplex/half-duplex selection (Pr.1426)

Set the communication speed and the communication mode (full-duplex/half-duplex) in **Pr.1426 Link speed and duplex mode selection**.

If the operation is not performed properly in the initial setting (**Pr.1426** = "0"), set **Pr.1426** according to the specifications of the connected hub.

Pr.1426 setting	Communication speed	Full-duplex/half-duplex system	Remarks
0 (initial value)	Automatic negotiation	Automatic negotiation	The communication speed and the communication mode (half-duplex/full-duplex) are automatically negotiated to ensure the optimum setting.
1	100 Mbps	Full-duplex	—
2	100 Mbps	Half-duplex	—
3	10 Mbps	Full-duplex	—
4	10 Mbps	Half-duplex	—

◆IP address (Pr.1434 to Pr.1437)

Enter the IP address of the inverter to be connected to Ethernet in **Pr.1434 to Pr.1437**.
(Enter the IP address assigned by the network administrator.)

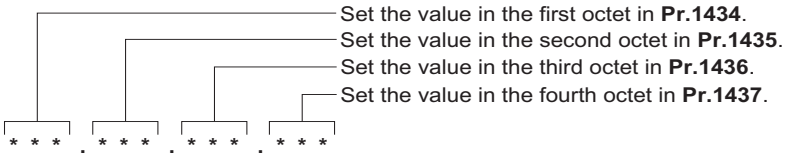

◆Subnet mask (Pr.1438 to Pr.1441)

Enter the subnet mask of the network to which the inverter belongs in **Pr.1438 to Pr.1441**.

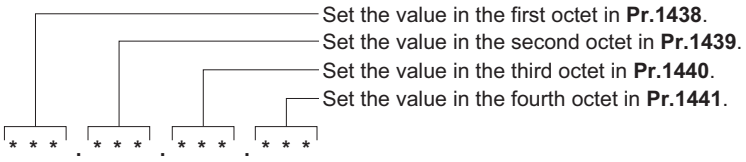

◆Keepalive time (Pr.1455)

An alive check message (KeepAlive ACK) is sent to a device if the device does not return any response within the time set in **Pr.1455 Keepalive time** while a TCP connection is established. When no response is returned after the third transmission, the connection will be forced to be closed.

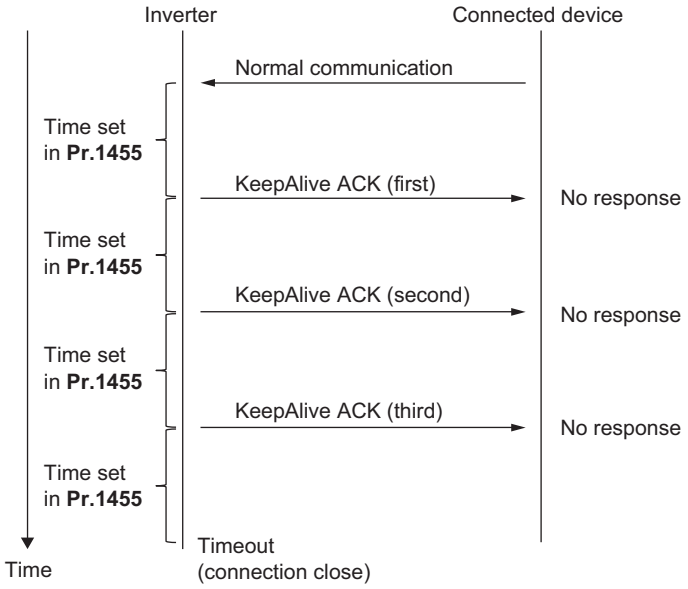

◆Ethernet IP filtering function (Pr.1442 to Pr.1448)

- Set the IP address range for connectable network devices (**Pr.1442 to Pr.1448**) to limit the connectable devices. The IP address setting range depends on the settings in **Pr.1443** and **Pr.1446**, **Pr.1444** and **Pr.1447**, and **Pr.1445** and **Pr.1448**. (Either of the settings can be larger than the other in **Pr.1443** and **Pr.1446**, **Pr.1444** and **Pr.1447**, and **Pr.1445** and **Pr.1448**.)

[Setting example 1]

	Pr.1442	Pr.1443	Pr.1444	Pr.1445
Ethernet IP address for filtering	192	168	1	100
		Pr.1446	Pr.1447	Pr.1448
Filtering range setting for the Ethernet IP address	—	9999	3	150

The range is between the values set in both parameters.

The range is between the values set in both parameters.

In this case, the IP address range in which Ethernet communication is permitted is "192.168.x (1 to 3).xxx (100 to 150)".

[Setting example 2]

	Pr.1442	Pr.1443	Pr.1444	Pr.1445
Ethernet IP address for filtering	192	168	2	100
		Pr.1446	Pr.1447	Pr.1448
Filtering range setting for the Ethernet IP address	—	9999	9999	50

The range is between the values set in both parameters.

In this case, the IP address range in which Ethernet communication is permitted is "192.168.2.xxx (50 to 100)".

- When **Pr.1442** to **Pr.1445** = "0 (initial value)", the function is invalid.
- When **Pr.1446** to **Pr.1448** = "9999 (initial value)", the range is invalid.

⚠ CAUTION

- **The Ethernet IP filtering function (Pr.1442 to Pr.1448) is provided as a means to prevent unauthorized access (with intentions such as to corrupt programs or data) by external systems, but the function does not prevent it completely. In order to protect the inverter and the system against unauthorized access by external systems, take additional security measures. Mitsubishi Electric Corporation will not take any responsibility for any problems in the inverter and the system incurred by unauthorized access.**
  The following are examples of measures to prevent unauthorized access.
  - Install a firewall.
  - Install a personal computer as a relay station, and control the relaying of transmission data using an application program.
  - Install an external device as a relay station to control access rights. (For the details of external devices used to control access rights, contact the distributors of the external devices.)

◆Ethernet IP address for command source selection (Pr.1449 to Pr.1454)

- To limit the network devices that send the operation or speed command through the Ethernet network (MODBUS/TCP, BACnet/IP or CC-Link IE Field Network Basic), set the range of IP addresses of the devices.
- When **Pr.1449 to Pr.1452** = "0 (initial value)", no IP address is specified for sending commands through the Ethernet network. In this case, operation through the Ethernet network (MODBUS/TCP, BACnet/IP or CC-Link IE Field Network Basic) is not available.
- When four or more clients attempt a connection to the inverter during MODBUS/TCP communication, the connection attempted from outside of the IP address range set for Ethernet command source selection may be forced to be closed.
- The setting range for command source selection depends on the settings in **Pr.1451** and **Pr.1453**, and **Pr.1452** and **Pr.1454**. (Either of the settings can be larger than the other in **Pr.1451** and **Pr.1453**, and **Pr.1452** and **Pr.1454**.)

[Setting example 1]

	Pr.1449	Pr.1450	Pr.1451	Pr.1452
Ethernet IP address for command source selection	192	168	1	100
			Pr.1453	Pr.1454
Command source selection range setting for the Ethernet IP address	—	—	3	150

The range is between the values set in both parameters.

The range is between the values set in both parameters.

In this case, the IP address range for command source selection via Ethernet communication is "192.168.x (1 to 3).xxx (100 to 150)".

[Setting example 2]

	Pr.1449	Pr.1450	Pr.1451	Pr.1452
Ethernet IP address for command source selection	192	168	2	100
			Pr.1453	Pr.1454
Command source selection range setting for the Ethernet IP address	—	—	9999	50

The range is between the values set in both parameters.

In this case, the IP address range in which Ethernet communication is permitted is "192.168.2.xxx (50 to 100)".

- When "9999 (initial value)" is set in **Pr.1453** and **Pr.1454**, the range is invalid.

NOTE

- When BACnet/IP is used, do not include IP addresses of other inverters in the Ethernet IP address range set for command source selection. If an IP address of any other inverter falls within the range, the protective function (E.EHR) will be activated after the time period set in **Pr.1432** after power is supplied to the inverter.

◆Ethernet signal loss detection (Pr.1431)

Use **Pr.1431** to set the operation when Ethernet communication is interrupted by physical factors including disconnection of the Ethernet board or Ethernet cable or damages on the Ethernet cable.

Pr.1431 setting	Description	Operation panel display/indicator	LF signal output
0 (initial value)	Detection disabled	—	No
1	Warning output	EHR	No
2	Warning and alarm output	EHR	Yes
3	Protective function (E.EHR)	E.EHR	Yes

◆Ethernet communication check time interval (Pr.1432)

- If a signal loss (communication stop) is detected between the inverter and all the devices with IP addresses in the range for Ethernet command source selection (**Pr.1449 to Pr.1454**) as a result of a signal loss detection, a communication error (E.EHR) occurs and the inverter trips.
- When "9999 (initial value)" is set in **Pr.1432**, the communication check (signal loss detection) will not be performed.
- The monitored items and parameter settings can be read via Ethernet when "0" is set in **Pr.1432**, but a communication error (E.EHR) occurs instantly when the operation mode is switched to the Network operation.
- A signal loss detection is made when any of 0.1 s to 999.8 s is set in **Pr.1432**. In order to enable the signal loss detection, data must be sent by connected devices at an interval equal to or less than the time set for the communication check. (The inverter makes a communication check (clearing of communication check counter) regardless of the station number setting of the data sent from the master.)
- Communication check is started at the first communication when the inverter operates in the Network operation mode and the command source is specified as communication via the Ethernet connector.

Example) When **Pr.1432** = 0.1 to 999.8 s

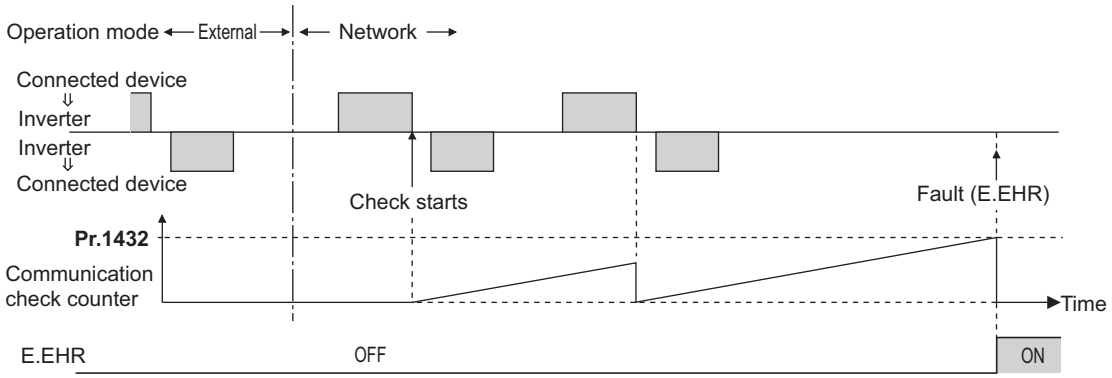

◆Ethernet communication network number (Pr.1424), Ethernet communication station number (Pr.1425)

- When the MELSOFT / FA product connection, SLMP, or iQSS is selected for Ethernet communication, enter the Ethernet communication network number in **Pr.1424** and the Ethernet communication station number in **Pr.1425**.

2.5.3 MELSOFT / FA product connection

FR Configurator2, GOT, or a relay station (programmable controller) can be connected via Ethernet.

◆Initial setting

- Set any value from "5000 to 5002, 5006 to 5008" in any of **Pr.1427 to Pr.1429 Ethernet function selection 1 to 3** to select the MELSOFT / FA product connection for the application. (For how to set the application value, refer to the Instruction Manual of the device connected via Ethernet.) (Refer to page 22.)
- Enter the Ethernet communication network number in **Pr.1424** and the Ethernet communication station number in **Pr.1425**. (Refer to page 26.)
- Enable the PLC function (**Pr.414 PLC function operation selection** ≠ "0 (initial value)") to use FR Configurator2 (Developer). (For the details of **Pr.414**, refer to the Instruction Manual (Detailed) of the FR-A800/FR-F800 inverter.)

◆System configuration

- Direct connection with FR Configrator2

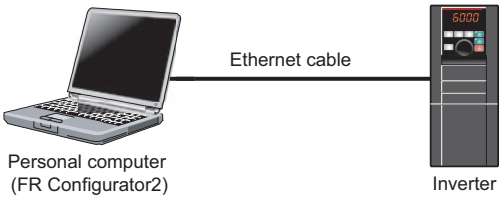

- Direct connection with GOT

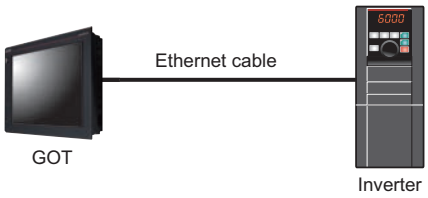

- Connection using a relay station (programmable controller)

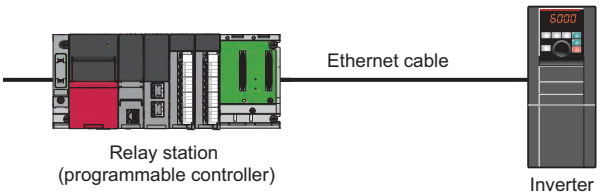

2.5.4 SLMP

SLMP is a common protocol for seamless communication between applications. Users do not have to be concerned with network layers or boundaries. SLMP communications are available among devices that can transfer messages by SLMP (programmable controllers, personal computers, HMIs and others). (For the details of the SLMP compatibility of external devices, refer to the Instruction Manual of external devices.)

◆Initial setting

- SLMP can be used when the PLC function is enabled. Set a value other than "0" in **Pr.414 PLC function operation selection**.
- To select SLMP for the application, set any value from "5010 to 5013" in any of **Pr.1427 to Pr.1429 Ethernet function selection 1 to 3**. (For how to set the application value, refer to the Instruction Manual of the device connected via Ethernet.) (Refer to page 22.)
- Enter the Ethernet communication network number in **Pr.1424** and the Ethernet communication station number in **Pr.1425**. (Refer to page 26.)

NOTE

- The FR-A800-E/FR-F800-E inverter supports binary codes only. (ASCII codes are not supported.)

◆Communication procedure

- Using TCP/IP

  The following is the communication procedure when executing SLMP communication with TCP/IP.

  With TCP/IP, connections are established when communication is executed, and whether data is received normally or not is checked to ensure reliability of data. However, the line load is high as compared to UDP/IP.

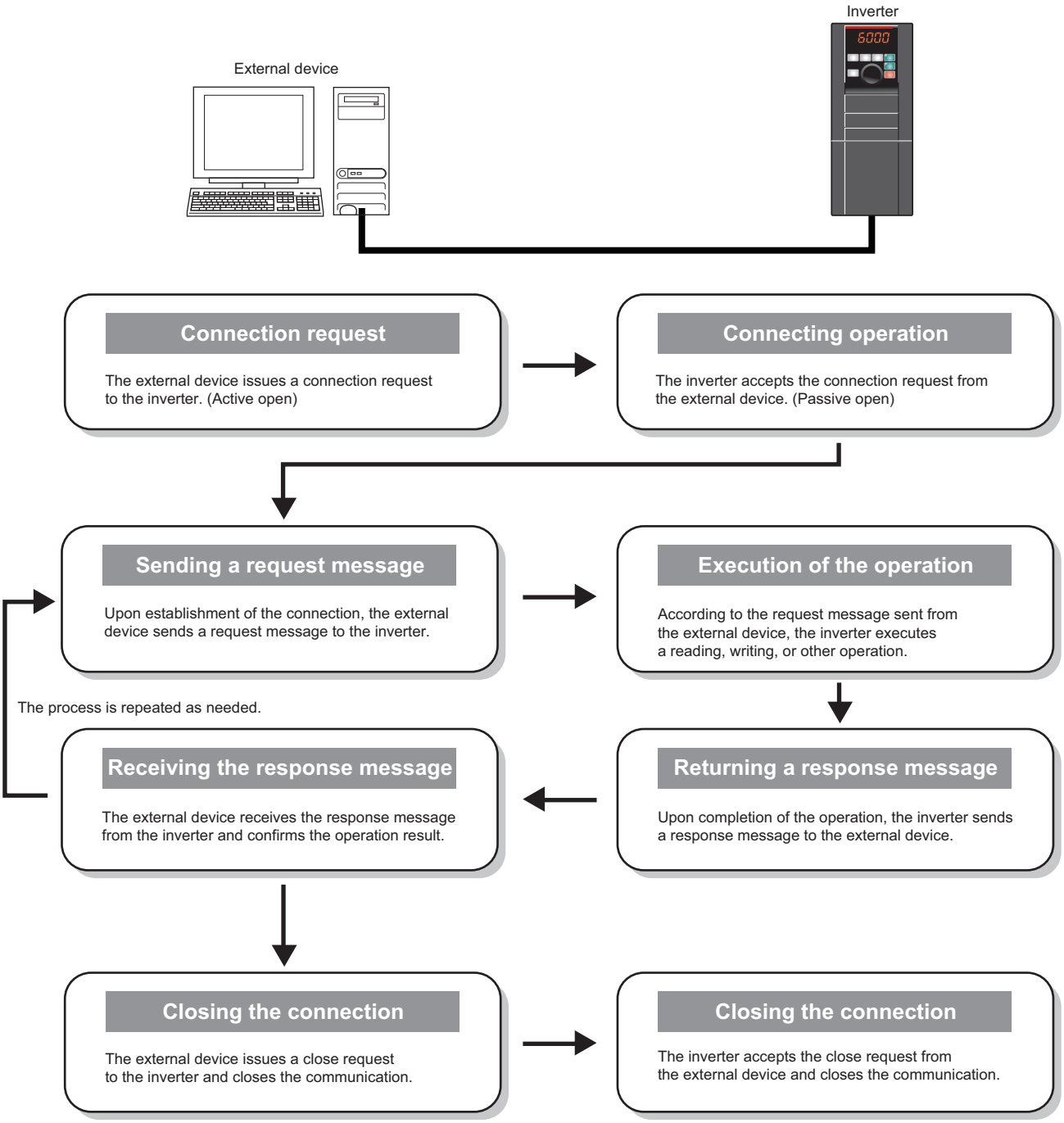

(N) Operation via communication and its settings

- Using UDP/IP

  The following is the communication procedure when executing SLMP communication with UDP/IP.

  With UDP/IP, connections are not established when communication is executed, and whether data is received normally or not is not checked. Therefore, the line load is low. However, data is less reliable as compared to TCP/IP.

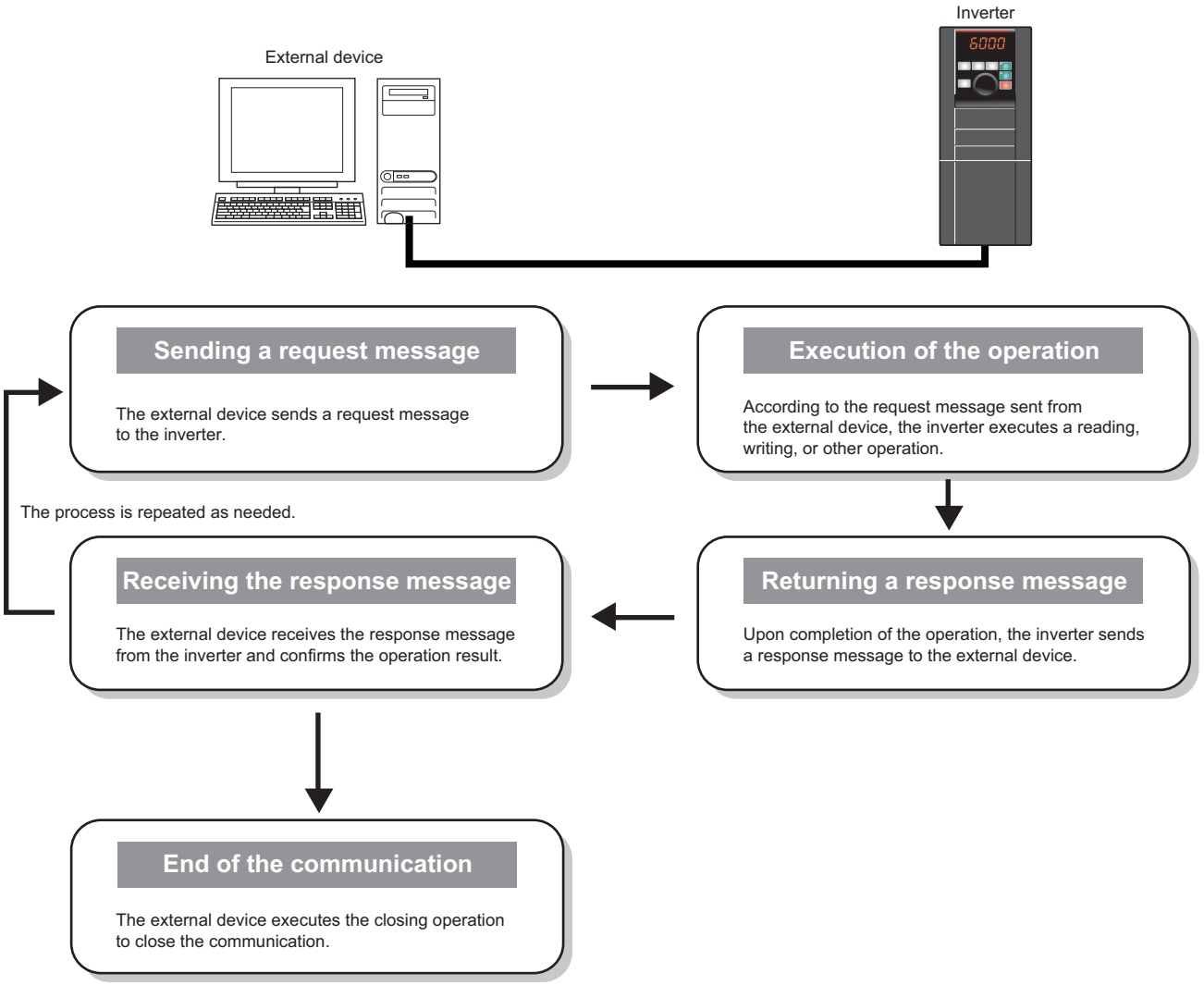

◆Message format

- Request message format

  The following is the format of a request message sent from the external device to the inverter. The request message data length is 2047 bytes at the maximum.

Header	Subheader	Destination network No.	Destination station No.	Destination unit I/O No.	Destination multidrop station No.	Request data length	Monitoring timer	Request data	Footer

- Response message format

  The following is the format of a response message sent from the inverter to the external device. The response message data length is 2048 bytes at the maximum.

• Normal completion

Header	Subheader	Destination network No.	Destination station No.	Destination unit I/O No.	Destination multidrop station No.	Response data length	End code	Response data	Footer

• Failed completion

Header	Subheader	Destination network No.	Destination station No.	Destination unit I/O No.	Destination multidrop station No.	Response data length

End code	Network No. (responding station)	Station No. (responding station)	Destination unit I/O No.	Destination multidrop station No.	Command	Subcommand	Footer

Error information

Item	Size	Endian	Description	
Header	—	—	Header for TCP/IP or UDP/IP. The header is added by the external device before transmission.	
Subheader (QnA-compatible 3E frame)	2 bytes	Big	Request: H5000 Response: HD000	
Subheader (QnA-compatible 4E frame)	6 bytes		Request: H5400 + Serial No.*1 + H0000 Response: HD400 + Serial No.*1 + H0000	
Destination network No.	1 byte	—	Specify the network No. of the access destination. Use a hexadecimal value to specify the network number. Own station: H00 Other stations: H01 to HEF (1 to 239)	The own station has a network No. of H00 and a station No. of HFF. The other stations have other values. The request data addressed to the own station is received regardless of the network No. and station No. settings. The request data addressed to the other stations is received when the **Pr.1424** and **Pr.1425** settings are the same.
Destination station No.	1 byte	—	Specify the station No. of the access destination. Use a hexadecimal value to specify the station number. Own station: HFF (when the network No. is H00) Other stations: H01 to H78 (1 to 120)	
Destination unit I/O No.	2 bytes	Little	Fixed to H03FF	
Destination multidrop station No.	1 byte	—	Fixed to H00	
Request data length	2 bytes	Little	Specify the data length from the monitoring timer to the request data in hexadecimal. Example) 24 bytes: H1800	

(N) Operation via communication and its settings

<table>
<tr><th>Item</th><th>Size</th><th>Endian</th><th>Description</th></tr>
<tr><td>Monitoring timer</td><td>2 bytes</td><td>Little</td><td>Set the waiting time until the inverter completes reading/writing after receiving a request message from the external device.
When the inverter does not return the response message within the waiting time, the response message will be discarded.
· H0000: Unlimited (until the execution is completed)
· H0001 to HFFFF (1 to 65535): Waiting time (Unit: 0.25 s)
Recommended setting
<table>
<tr><th>Access destination</th><th colspan="2">Recommended setting</th></tr>
<tr><td rowspan="3">Own station</td><td>Monitoring, operation command, frequency setting (RAM)</td><td>H1 to H40 (0.25 to 10 s)</td></tr>
<tr><td>Parameter read/write, frequency setting (EEPROM)</td><td>H1 to H40 (0.25 to 10 s)</td></tr>
<tr><td>Parameter clear / all clear</td><td>H15 to H40 (5.25 to 10 s)</td></tr>
<tr><td rowspan="3">Other station</td><td>Monitoring, operation command, frequency setting (RAM)</td><td>H2 to H40 (0.5 to 60 s)</td></tr>
<tr><td>Parameter read/write, frequency setting (EEPROM)</td><td>H2 to H40 (0.5 to 60 s)</td></tr>
<tr><td>Parameter clear / all clear</td><td>H15 to H40 (5.25 to 60 s)</td></tr>
</table></td></tr>
<tr><td>Request data</td><td>Variable</td><td>Little</td><td>Specify the command, subcommand, and data that indicate the requested operation. (Refer to page 33.)</td></tr>
<tr><td>Response data length</td><td>2 bytes</td><td>Little</td><td>The data length from the end code to the response data (when completed) or error information (when failed) is stored in hexadecimal. (Unit: byte)</td></tr>
<tr><td>End code</td><td>2 bytes</td><td>Little</td><td>The command processing result is stored. The value "0" is stored for normal completion. The error code of the access destination (refer to page 39) is stored for failed completion.</td></tr>
<tr><td>Response data</td><td>Variable</td><td>Little</td><td>When the command is completed normally, data such as the read data corresponding to the command is stored.</td></tr>
<tr><td>Error information</td><td>9 bytes</td><td>—</td><td>The network No. (responding station) (1 byte), station No. (responding station) (1 byte), destination unit I/O No. (2 bytes), and destination multidrop station No. (1 byte) of the stations which respond errors are stored for failed completion. Numbers different from those in the request message may be stored because the information on the station with error response is stored. The command (2 bytes) and the subcommand (2 bytes) being issued when an error occurred are also stored.</td></tr>
<tr><td>Footer</td><td>—</td><td>—</td><td>The footer is used for the TCP/IP and UDP/IP protocols. The footer is added by the external device before transmission.</td></tr>
</table>

*1 The serial No. is given by the external device for message recognition. If a request message with a serial No. is sent, the same serial No. will also be added on the response message. The serial No. is used when multiple request messages are sent from an external device to the same inverter.

◆Commands

- The following table lists the commands and subcommands. (When the inverter receives a command other than listed in the following table, it returns an error code (HC059).)

Category	Operation		Command	Subcommand	Description	Refer to page
Device memory	Batch read	In bit units	H0401	H0001	The inverter reads the value in bit devices (with consecutive device numbers) in 1-bit units.	36
		In word units	H0401	H0001	The inverter reads the value in bit devices (with consecutive device numbers) in 16-bit units.	
				H0000	The inverter reads the value in word devices (with consecutive device numbers) in 1-word units.	
	Batch write	In bit units	H1401	H0001	The inverter writes the value to bit devices (with consecutive device numbers) in 1-bit units.	36
		In word units	H1401	H0001	The inverter writes the value to bit devices (with consecutive device numbers) in 16-bit units.	
				H0000	The inverter writes the value to word devices (with consecutive device numbers) in 1-word units.	
	Read random	In word units	H0403	H0001	The inverter reads the value in the devices with the specified numbers. The devices with non-consecutive numbers can be specified. The value is read from the bit devices in 16-bit or 32-bit units.	37
				H0000	The inverter reads the value in the devices with the specified numbers. The devices with non-consecutive numbers can be specified. The value is read from the word devices in 1-word or 2-word units.	
	Write random	In bit units	H1402	H0001	The inverter writes the value to the bit devices with the specified device numbers (each bit has a device number). The devices with non-consecutive numbers can be specified.	38
		In word units	H1402	H0001	The inverter writes the value to the bit devices with the specified device numbers (each set of 16 bits has a device number). The devices with non-consecutive numbers can be specified.	
				H0000	The inverter writes the value to the word devices with the specified device numbers (each word or each set of two words has a device number). The devices with non-consecutive numbers can be specified.	
Programmable controller CPU	Remote run		H1001	H0000	The external device executes the remote RUN to the inverter.	39
	Remote stop		H1002	H0000	The external device executes the remote STOP to the inverter.	39
	CPU (inverter) model name read		H0101	H0000	The external device reads the model name and model code of the inverter.	39

◆Device

- The following table lists the device codes and the range available for each command.

Device		Type	Device code	Range*1
Special relay (SM)		Bit	H91	Refer to the FR-A800/FR-F800 PLC Function Programming Manual.
Special register (SD)		Word	HA9	*2
Input (X)		Bit	H9C	H0 to H7F (hexadecimal)
Output (Y)		Bit	H9D	H0 to H7F (hexadecimal)
Internal relay (M)		Bit	H90	0 to 127 (decimal)
Data register (D)		Word	HA8	0 to 255 (decimal)
Timer (T)	Contact (TS)	Bit	HC1	0 to 15 (decimal)
	Coil (TC)		HC0	
	Current value (TN)	Word	HC2	
Retentive timer (ST)	Contact (STS)	Bit	HC7	0 (Initial value. Up to 16 retentive timers can be used by PLC parameter assignment.)
	Coil (STC)		HC6	
	Current value (STN)	Word	HC8	
Counter (C)	Contact (CS)	Bit	HC4	0 to 15 (decimal)
	Coil (CC)		HC3	
	Current value (CN)	Word	HC5	

*1 If write/read is requested from/to any devices outside the range, the error code H4031 is returned. (Refer to page 39.)

*2 When the word unit is specified for special relay devices, the first device No. must be a number in the special relay list (refer to the PLC Function Programming Manual for the details). Otherwise, the data is not read/written correctly.

◆Data specified in the command

- Device code
  A one byte numerical value is sent.

- Device No. (first device No.) specification
  The device No. is specified for reading/writing data.
  When consecutive devices are specified, the first device No. is specified. The device No. is specified in decimal or hexadecimal depending on the device type.
  A three byte numerical value is sent from the lower byte to the upper byte. If the device No. is a decimal value, convert it to a hexadecimal value.
  (Example) Device No. of Internal relay M63 / Input X20

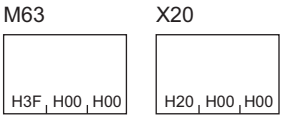

  Internal relay M63 has a decimal device No. Convert the decimal value to a hexadecimal value H00003F. The value is sent in the order 3F, 00, and 00. The device No. of Input X20 is regarded as H000020 and sent in the order 20, 00, and 00.

- Specification of the number of devices
  The number of devices is specified for reading/writing data.
  A two byte numerical value is sent from the lower byte to the upper byte.
  (Example) Number of devices: 5 / 20

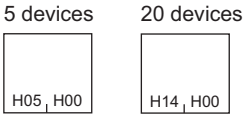

- Specification of the number of devices for bit access
  The number of devices is specified for reading/writing data in bit units. The number is used in the Write random command (refer to page 38).
  (Example) Number of devices: 5 / 20

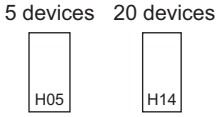

- Read data / write data

  The value read from the device is stored for reading. The value to be written to the device is stored for writing.

  The data is arranged differently between reading/writing in bit units (subcommand: H0001) and reading/writing in word units (subcommand: H0000).

  - In bit units (subcommand: H0001)

    Each device is specified in 4 bits. The data is sent from the upper bit for the device with the first device No. and the subsequent devices in order. The ON state is denoted as 1 and the OFF state is denoted as 0.

    (Example) ON/OFF state of five devices starting from M10

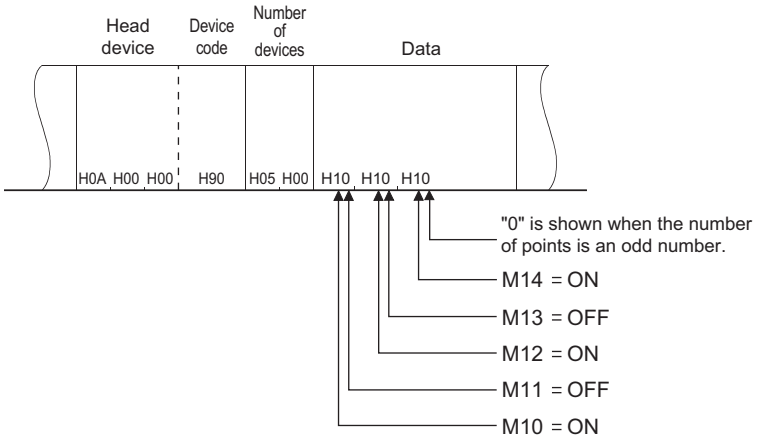

  - In word units (subcommand: H0000)

    When bit devices are used as word data, each device is specified in one bit. The data is stored from the lower byte (bit 0 to bit 7) to the upper byte (bit 8 to bit 15).

    (Example) ON/OFF state of 32 devices starting from M16

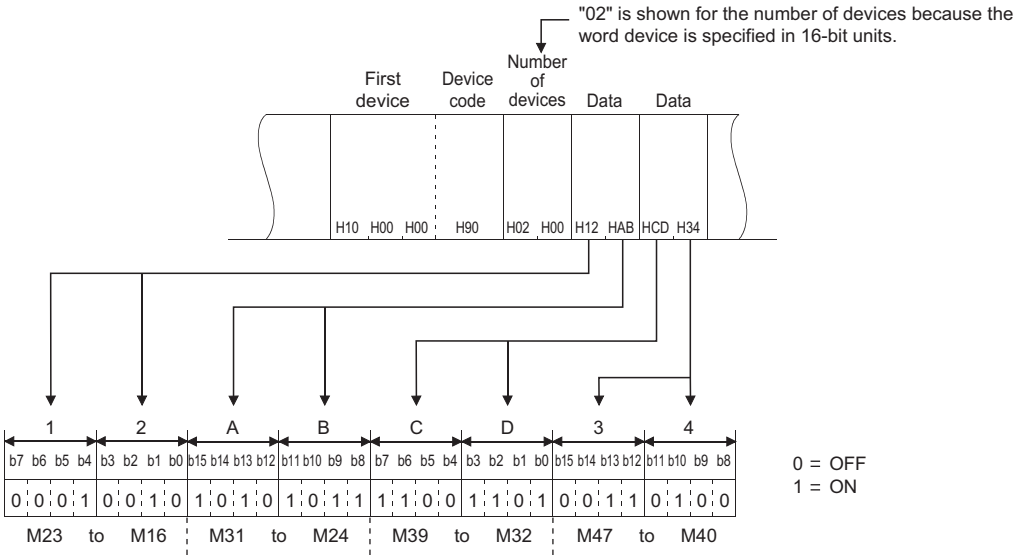

    When word devices are used, one word is specified in 16 bits as follows. The data is stored from the lower byte (bit 0 to bit 7) to the upper byte (bit 8 to bit 15).

    The user should switch the values in the upper and lower bytes in the response data for reading.

    The user should switch the write values in the upper and lower bytes to store them in the request data for writing.

(Example) Data stored in D50/D51

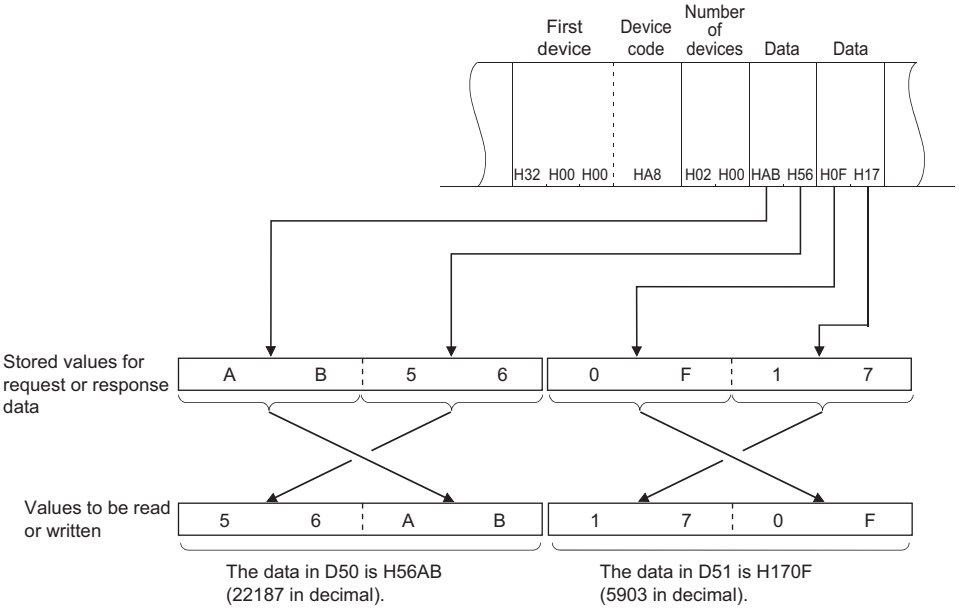

◆Details of commands

- Batch read

  The inverter reads the value in the specified devices.

  - Request data

H01 H04	Subcommand	First device No.	Device code	Number of devices

Item	Description
Subcommand	Specify the unit (bit/word) for reading.
First device No.	Specify the number of the first device. (Refer to page 34.)
Device code	Specify the type of the target devices. (Refer to page 33.)
Number of devices	Specify the number of target devices.

  - Response data

    The value read from the device is stored in hexadecimal.

- Batch write

  The inverter writes the value to the specified devices.

  - Request data

H01 H14	Subcommand	First device No.	Device code	Number of devices	Write data

Item	Description
Subcommand	Specify the unit (bit/word) for writing.
First device No.	Specify the number of the first device. (Refer to page 34.)
Device code	Specify the type of the target devices. (Refer to page 33.)
Number of devices	Specify the number of target devices.
Writing data	Specify the value to be written to all the devices specified by the Number of devices in the request data.

  - Response data

    None

- Read random

  The inverter reads the value in the devices with the specified numbers. The devices with non-consecutive numbers can be specified.

  - Request data

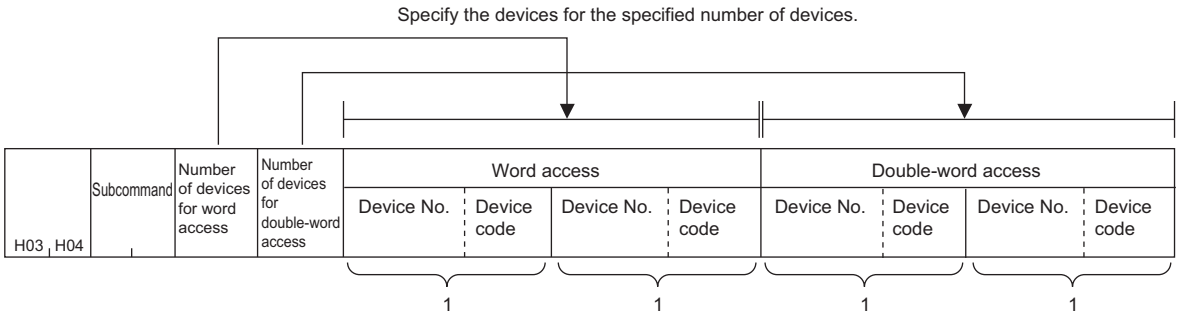

Item	Description
Subcommand	Specify the unit (bit/word) for reading.
Number of devices for word access	Specify the number of devices for one-word access. (bit device: 16 bits, word device: one word)
Number of devices for double-word access	Specify the number of devices for two-word access. (bit device: 32 bits, word device: two words)
Word access	Specify the devices according to the number set in the request data for word access. It is not necessary to specify the devices when "0" is set.
Double-word access	Specify the devices according to the number set in the request data for double word access. It is not necessary to specify the devices when "0" is set.
Device No.	Specify the number of the devices. (Refer to page 34.)
Device code	Specify the type of the target devices. (Refer to page 33.)

  - Response data

    The value read from the device is stored in hexadecimal.

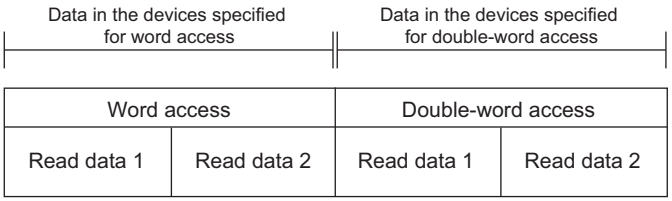

(N) Operation via communication and its settings

- Write random

  The inverter writes the value in the devices with the specified numbers. The devices with non-consecutive numbers can be specified.

  - Request data

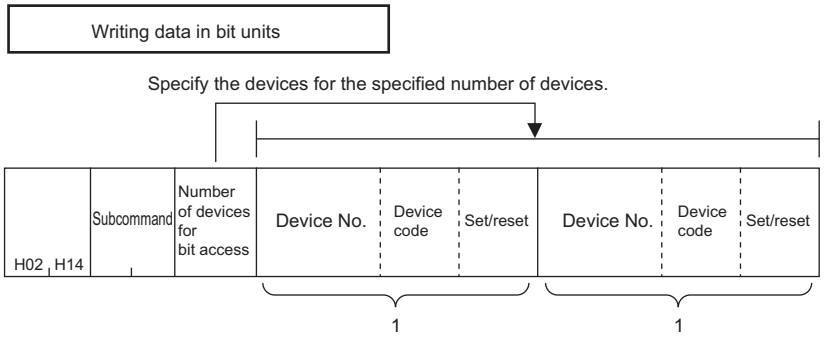

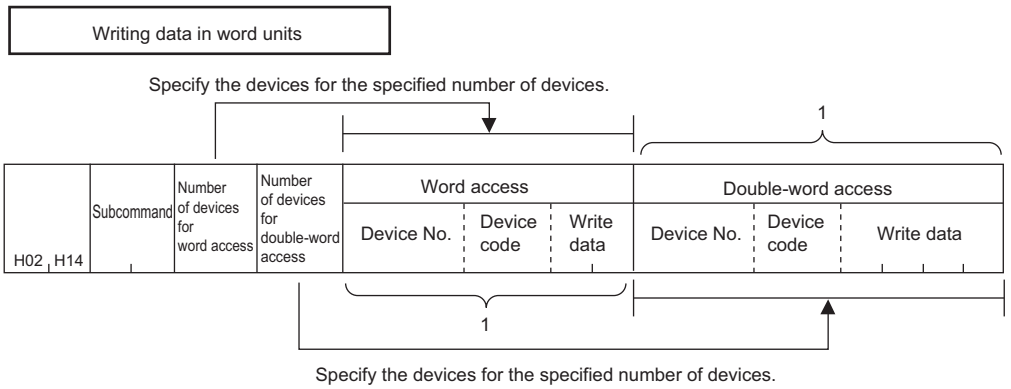

Item	Description
Subcommand	Specify the unit (bit/word) for writing.
Number of devices for bit access	Specify the number of target devices.
Number of devices for word access	
Number of devices for double-word access	
Word access	Specify the devices according to the number set in the request data for word access. It is not necessary to specify the devices when "0" is set.
Double-word access	Specify the devices according to the number set in the request data for double word access. It is not necessary to specify the devices when "0" is set.
Device No.	Specify the number of the devices. (Refer to page 34.)
Device code	Specify the type of the target devices. (Refer to page 33.)
Set/reset	Specify ON/OFF of the bit devices.

Data to write		Remarks
ON	OFF	
H01	H00	Either of the one byte numerical values is sent.

  - Response data

    None

- Remote RUN

  The external device executes the remote RUN to the inverter.

  - Request data

H01 H10	H00 H00	Mode	Clear mode	H00

Item	Description	
Mode	Forced execution of the remote RUN is not allowed.	H0100
	Forced execution of the remote RUN is allowed.	H0300
Clear mode	Devices are not cleared (initialized).	H00
	Devices are cleared.	H01, H02

  - Response data

    None

- Remote STOP

  The external device executes the remote STOP to the inverter.

  - Request data

H02 H10	H00 H00	H01 H00

  - Response data

    None

- CPU (inverter) model name read

  The external device reads the model name and model code of the inverter.

  - Request data

H01 H01	H00 H00

  - Response data

Model	Model code

Item	Description
Model	The inverter model is stored. Up to 16 characters can be stored. If the model name is shorter than 16 characters, a space (H20) is stored instead of a character. (Example) FR-A800-E inverter: FR-A800-E
Model code	Fixed to H054E

◆Error code

When the end code is other than "0" (failed completion), one of the error codes shown in the following table will be stored.

Error code	Fault definition
H4031	The device outside of the range is specified.
H4080	Request data fault
H4A01	The network with the No. set in the routing parameter does not exist. (The destination network No., destination station No., or destination unit I/O No. is different from that of the target inverter.)
HC059	The command or subcommand is specified incorrectly. Or, an unspecified command is received.
HC05B	The inverter cannot read/write data from/to the specified device.
HC05C	The request message has an error.
HC060	The requested operation has an error. Example) Data is specified incorrectly for the bit device.
HC061	The request data length is inconsistent with the number of data.
HCEE1	The request message size exceeds the allowable range.
HCEE2	The response message size exceeds the allowable range.

2.5.5 CC-Link IE Field Network Basic

The CC-Link IE Field Network Basic enables CC-Link IE communication using the general-purpose Ethernet-based technology. The CC-Link IE Field Network Basic is suited to small-scale equipment for which high-speed control is not necessary, and can coexist with the standard Ethernet TCP/IP (HTTP, FTP, etc.).

Pr.	Name	Initial value	Setting range	Description
541 **N100**	**Frequency command sign selection**	0	0	Frequency command without sign
			1	Frequency command with sign
544 **N103**∗1	**CC-Link extended setting**	0	0, 1, 12, 14, 18, 24, 28, 100, 112, 114, 118, 128	The function of the remote registers can be extended when the CC-Link IE Field Network Basic is used.
804 **D400**∗2	**Torque command source selection**	0	0 to 6	In the torque control mode, the torque command source can be selected.
810 **H700**∗2	**Torque limit input method selection**	0	0 to 2	The torque limit input method can be selected.

∗1 The setting is applied after an inverter reset or power-ON.
∗2 The setting is available for the FR-A800-E only.

◆Communication specifications

Item		Description
Transmission speed		100 Mbps
Communication method		UDP/IP
Connectable units		Master: 1 Slave: up to 64
Topology		Star
Number of occupied stations		Occupies one station
Maximum number of links per station	RX	64 (8 bytes)
	RY	64 (8 bytes)
	RWr	32 (64 bytes)
	RWw	32 (64 bytes)
Reference response time∗1		Within 15 ms

∗1 The reference response time is the period from when the inverter receives a command from the master until the inverter returns the response to the master.

◆Initial setting

- To select the CC-Link IE Field Network Basic for the application, set "61450" in any of **Pr.1427 to Pr.1429 Ethernet function selection 1 to 3**. (Refer to page 22.)
- To limit the network devices that send the command through the Ethernet network (CC-Link IE Field Network Basic), set the range of IP addresses (**Pr.1449 to Pr.1454**). (Refer to page 25.)
- Use **Pr.1432 Ethernet communication check time interval** to set the interval of the check time (for signal loss detection) for all devices with IP addresses in the range specified for Ethernet command source selection (**Pr.1449 to Pr.1454**). (Refer to page 26.)

NOTE

- To use the CC-Link IE Field Network Basic, do not install the FR-A8NC to the inverter. (Doing so disables communication through the CC-Link IE Field Network Basic.)
- When the CC-Link IE Field Network Basic is used, a communication error (E.EHR) occurs regardless of the **Pr.1432 Ethernet communication check time interval** setting in the following cases: the data addressed to the own station is not received for the predetermined timeout period or longer, or the status bit of the cyclic transmission addressed to the own station turns OFF (when the master gives a command to stop the cyclic transmission). (For the details of the timeout period, status bit of the cyclic transmission, and command to stop the cyclic transmission, refer to the Instruction Manual of the master controller which supports the CC-Link IE Field Network Basic.)

◆CC-Link extended setting (Pr.544)

- Use this parameter to select the function of the remote registers for the CC-Link IE Field Network Basic.

Pr.544 setting	Description		Refer to page
0 (initial setting)	Compatible with CC-Link Ver.1		42
1	Compatible with CC-Link Ver.1		43
12	Compatible with the double setting of CC-Link Ver.2		43
14	Compatible with the quadruple setting of CC-Link Ver.2		43
18	Compatible with the octuple setting of CC-Link Ver.2		44
24	Compatible with the quadruple setting of CC-Link Ver.2		43
28	Compatible with the octuple setting of CC-Link Ver.2		44
100	Compatible with CC-Link Ver.1	PLC function	—*1
112	Compatible with the double setting of CC-Link Ver.2		
114	Compatible with the quadruple setting of CC-Link Ver.2		
118	Compatible with the octuple setting of CC-Link Ver.2		
128	Compatible with the octuple setting of CC-Link Ver.2		

*1 Refer to the PLC function programming manual.

◆Frequency command with sign (Pr.541)

- The start command (forward/reverse rotation) can be inverted by adding a plus or minus sign to the value of the frequency command sent through the CC-Link IE Field Network Basic.
- The **Pr.541 Frequency command sign selection** setting is applied to the frequency command from RWw1. (Refer to page 47.)

Speed setting using Pr.37 and Pr.144	Pr.541 setting	Sign	Setting range	Actual frequency command
Not used	0	Not used	0 to 59000	0 to 590.00 Hz
	1	With	-32768 to 32767 (two's complement)	-327.68 to 327.67 Hz
With	0	Not used	0 to 65535	It depends on **Pr.37, Pr.144, Pr.811***1 (in 1 or 0.1 increments)
	1	With	-32768 to 32767 (two's complement)	

*1 **Pr.811** is only available for the FR-A800-E.

- Relationship between the start command and sign (**Pr.541**="1")

Start command	Sign of the frequency command	Actual run command
Forward rotation	+	Forward rotation
	-	Reverse rotation
Reverse rotation	+	Reverse rotation
	-	Forward rotation

NOTE

- When **Pr.541** = 1 (with sign)
  - When EEPROM write is specified with the RYE, write mode error (error code H01) will occur.
  - When concurrent execution of both RYD and RYE is enabled (when a value other than 0 is set in **Pr.544**) and both RYD and RYE are turned on, RYD has precedence.
  - When power is turned on (inverter reset), the initial setting status of the sign bit is "positive" and the set frequency is "0 Hz". (The motor does not operate at the frequency set before turning OFF the power (inverter reset).)
  - When set frequency is written with the instruction code of HED and HEE, the sign of the frequency command is not changed.
- Setting **Pr.811 Set resolution switchover** ="1 or 11" changes the increment from 1 r/min to 0.1 r/min.

◆I/O signal list

◆When Pr.544 = "0" (compatible with CC-Link Ver.1)

• Remote I/O

Device No.*6	Signal	Refer to page
RYn0	Forward rotation command*3	45
RYn1	Reverse rotation command*3	45
RYn2	High-speed operation command (terminal RH function)*1	45
RYn3	Middle-speed operation command (terminal RM function)*1	45
RYn4	Low-speed operation command (terminal RL function)*1	45
RYn5	Jog operation command (terminal Jog function)*1	45
RYn6	Second function selection (terminal RT function)*1	45
RYn7	Current input selection (terminal AU function)*1	45
RYn8	Selection of automatic restart after instantaneous power failure (terminal CS function)*1, *2	45
RYn9	Output stop (terminal MRS function)*1	45
RYnA	Start self-holding selection (terminal STOP function)*1	45
RYnB	Reset (terminal RES function)*1	45
RYnC	Monitor command	45
RYnD	Frequency setting command (RAM)	45
RYnE	Frequency setting command (RAM, EEPROM)	45
RYnF	Instruction code execution request	45
RY(n+1)0 to RY(n+1)7	Reserved	—
RY(n+1)8	Not used (initial data process completion flag)	—
RY(n+1)9	Not used (initial data process request flag)	—
RY(n+1)A	Error reset request flag	45
RY(n+1)B to RY(n+1)F	Reserved	—

Device No.*6	Signal	Refer to page
RXn0	Forward running	46
RXn1	Reverse running	46
RXn2	Running (terminal RUN function)*4	46
RXn3	Up to frequency (terminal SU function)*4	46
RXn4	Overload alarm (terminal OL function)*4	46
RXn5	Instantaneous power failure (terminal IPF function)*4	46
RXn6	Frequency detection (terminal FU function)*4	46
RXn7	Error (terminal ABC1 function)*4	46
RXn8	— (terminal ABC2 function)*4	46
RXn9	**Pr.313** assignment function (DO0)*5	46
RXnA	**Pr.314** assignment function (DO1)*5	46
RXnB	**Pr.315** assignment function (DO2)*5	46
RXnC	Monitoring	46
RXnD	Frequency setting completion (RAM)	46
RXnE	Frequency setting completion (RAM, EEPROM)	46
RXnF	Instruction code execution completion	46
RX(n+1)0 to RX(n+1)7	Reserved	—
RX(n+1)8	Not used (initial data process request flag)	—
RX(n+1)9	Not used (initial data process completion flag)	—
RX(n+1)A	Error status flag	46
RX(n+1)B	Remote station ready	46
RX(n+1)C to RX(n+1)F	Reserved	—

*1 These signals are set in the initial status. Using **Pr.180 to Pr.189**, you can change input signal functions. Refer to the Instruction Manual (Detailed) of the FR-A800/FR-F800 inverter for details of **Pr.180 to Pr.189**.
*2 For the FR-F800-E, no function is assigned in the initial setting.
*3 The signals are fixed. They cannot be changed using parameters.
*4 These signals are set in the initial status. Using **Pr.190 to Pr.196**, you can change output signal functions. Refer to the Instruction Manual (Detailed) of the FR-A800/FR-F800 inverter for details of **Pr.190 to Pr.196**.
*5 Output signal can be assigned using **Pr.313 to Pr.315**. The setting range depends on the inverter. For details, refer to the description of **Pr.190 to Pr.196 (Output terminal function selection)** in the Instruction Manual (Detailed) of the FR-A800/FR-F800 inverter.
*6 "n" indicates a value determined according to the station number setting.

• Remote register

Address*9	Description		Refer to page
	Upper 8 bits	Lower 8 bits	
RWwn	Monitor code 2	Monitor code 1	47
RWwn+1	Set frequency (0.01 Hz increments) / torque command*8		47
RWwn+2	H00 (arbitrary)*7	Instruction code	47
RWwn+3	Write data		47

Address*9	Description	Refer to page
RWrn	First monitor value	48
RWrn+1	Second monitor value	48
RWrn+2	Reply code	48
RWrn+3	Read data	48

*7 The above 8 bit is always H00 even if a value other than H00 is set.
*8 For the FR-A800-E, when **Pr.804=**"3 or 5" during torque control under Real sensorless vector control or vector control, a torque command value is set in RWwn+1.
*9 "n" indicates a value determined according to the station number setting.

◆When Pr.544 = "1" (compatible with CC-Link Ver.1)

- Remote I/O

  Same as when **Pr.544** = 0 (Refer to page 42.)
- Remote register

Address*2	Description		Refer to page
	Upper 8 bits	Lower 8 bits	
RWwn	Monitor code 2	Monitor code 1	47
RWwn+1	Set frequency (0.01 Hz increments) / torque command*1		47
RWwn+2	Link parameter extended setting	Instruction code	47
RWwn+3	Write data		47

Address*2	Description		Refer to page
	Upper 8 bits	Lower 8 bits	
RWrn	First monitor value		48
RWrn+1	Second monitor value		48
RWrn+2	Reply code 2	Reply code 1	48
RWrn+3	Read data		48

*1 For the FR-A800-E, when **Pr.804**="3 or 5" during torque control under Real sensorless vector control or vector control, a torque command value is set in RWwn+1.

*2 "n" indicates a value determined according to the station number setting.

◆When Pr.544 = "12" (Compatible with the double setting of CC-Link Ver.2)

- Remote I/O

  Same as when **Pr.544** = 0 (Refer to page 42.)
- Remote register

Address*2	Description		Refer to page
	Upper 8 bits	Lower 8 bits	
RWwn	Monitor code 2	Monitor code 1	47
RWwn+1	Set frequency (0.01 Hz increments) / torque command*1		47
RWwn+2	Link parameter extended setting	Instruction code	47
RWwn+3	Write data		47
RWwn+4	Monitor code 3		47
RWwn+5	Monitor code 4		47
RWwn+6	Monitor code 5		47
RWwn+7	Monitor code 6		47

Address*2	Description		Refer to page
	Upper 8 bits	Lower 8 bits	
RWrn	First monitor value		48
RWrn+1	Second monitor value		48
RWrn+2	Reply code 2	Reply code 1	48
RWrn+3	Read data		48
RWrn+4	Third monitor value		48
RWrn+5	Fourth monitor value		48
RWrn+6	Fifth monitor value		48
RWrn+7	Sixth monitor value		48

*1 For the FR-A800-E, when **Pr.804**="3 or 5" during torque control under Real sensorless vector control or vector control, a torque command value is set in RWwn+1.

*2 "n" indicates a value determined according to the station number setting.

◆When Pr.544 = "14 or 24" (compatible with the quadruple setting of CC-Link Ver.2)

- Remote I/O

  Same as when **Pr.544** = 0 (Refer to page 42.)
- Remote register

Address*4	Description		Refer to page
	Upper 8 bits	Lower 8 bits	
RWwn	Monitor code 2	Monitor code 1	47
RWwn+1	Set frequency (0.01 Hz increments)		47
RWwn+2	Link parameter extended setting	Instruction code	47
RWwn+3	Write data		47
RWwn+4	Monitor code 3		47
RWwn+5	Monitor code 4		47
RWwn+6	Monitor code 5		47
RWwn+7	Monitor code 6		47
RWwn+8	Fault history No.	H00	47
RWwn+9	PID set point (0.01% increments)*1		47
RWwn+A	PID measured value (0.01% increments)*1		47
RWwn+B	PID deviation (0.01% increments)*1		47
RWwn+C	Torque command or torque limit*2 / Torque command or torque limit (1st quadrant)*3		47, 52

Address*4	Description		Refer to page
	Upper 8 bits	Lower 8 bits	
RWrn	First monitor value		48
RWrn+1	Second monitor value		48
RWrn+2	Reply code 2	Reply code 1	48
RWrn+3	Read data		48
RWrn+4	Third monitor value		48
RWrn+5	Fourth monitor value		48
RWrn+6	Fifth monitor value		48
RWrn+7	Sixth monitor value		48
RWrn+8	Fault history No.	Fault data	48
RWrn+9	Fault record (output frequency)		48
RWrn+A	Fault record (output current)		48
RWrn+B	Fault record (output voltage)		48
RWrn+C	Fault record (energization time)		48

(N) Operation via communication and its settings

Address*4	Description		Refer to page
	Upper 8 bits	Lower 8 bits	
RWwn+D	H00 (Free)*2 / Torque limit (2nd quadrant)*3		47
RWwn+E	H00 (Free)*2 / Torque limit (3rd quadrant)*3		47
RWwn+F	H00 (Free)*2 / Torque limit (4th quadrant)*3		47

Address*4	Description		Refer to page
	Upper 8 bits	Lower 8 bits	
RWrn+D	H00 (Free)		—
RWrn+E			
RWrn+F			

*1 Valid when **Pr.128**="50, 51, 60, or 61".
*2 Applicable when **Pr.544**="14".
*3 Applicable when **Pr.544**="24".
*4 "n" indicates a value determined according to the station number setting.

◆When Pr.544 = "18 or 28" (compatible with the octuple setting of CC-Link Ver.2)

- Remote I/O

  Same as when **Pr.544** = 0 (Refer to page 42.)

- Remote register

Address*4	Description		Refer to page
	Upper 8 bits	Lower 8 bits	
RWwn	Monitor code 2	Monitor code 1	47
RWwn+1	Set frequency (0.01 Hz increments)		47
RWwn+2	Link parameter extended setting	Instruction code	47
RWwn+3	Write data		47
RWwn+4	Monitor code 3		47
RWwn+5	Monitor code 4		47
RWwn+6	Monitor code 5		47
RWwn+7	Monitor code 6		47
RWwn+8	Fault history No.	H00	47
RWwn+9	PID set point (0.01% increments)*1		47
RWwn+A	PID measured value (0.01% increments)*1		47
RWwn+B	PID deviation (0.01% increments)*1		47
RWwn+C	Torque command or torque limit*2 / Torque command or torque limit (1st quadrant)*3		47, 52
RWwn+D	H00 (Free)*2 / Torque limit (2nd quadrant)*3		47
RWwn+E	H00 (Free)*2 / Torque limit (3rd quadrant)*3		47
RWwn+F	H00 (Free)*2 / Torque limit (4th quadrant)*3		47
RWwn+10	Link parameter extended setting	Instruction code	48
RWwn+11	Write data		48
RWwn+12	Link parameter extended setting	Instruction code	48
RWwn+13	Write data		48
RWwn+14	Link parameter extended setting	Instruction code	48
RWwn+15	Write data		48
RWwn+16	Link parameter extended setting	Instruction code	48
RWwn+17	Write data		48
RWwn+18	Link parameter extended setting	Instruction code	48
RWwn+19	Write data		48
RWwn+1A	H00 (Free)		—
RWwn+1B			
RWwn+1C			
RWwn+1D			
RWwn+1E			
RWwn+1F			

Address*4	Description		Refer to page
	Upper 8 bits	Lower 8 bits	
RWrn	First monitor value		48
RWrn+1	Second monitor value		48
RWrn+2	Reply code 2	Reply code 1	48
RWrn+3	Read data		48
RWrn+4	Third monitor value		48
RWrn+5	Fourth monitor value		48
RWrn+6	Fifth monitor value		48
RWrn+7	Sixth monitor value		48
RWrn+8	Fault history No.	Fault data	48
RWrn+9	Fault record (output frequency)		48
RWrn+A	Fault record (output current)		48
RWrn+B	Fault record (output voltage)		48
RWrn+C	Fault record (energization time)		48
RWrn+D	H00 (Free)		—
RWrn+E			
RWrn+F			
RWrn+10	Reply code		48
RWrn+11	Read data		48
RWrn+12	Reply code		48
RWrn+13	Read data		48
RWrn+14	Reply code		48
RWrn+15	Read data		48
RWrn+16	Reply code		48
RWrn+17	Read data		48
RWrn+18	Reply code		48
RWrn+19	Read data		48
RWrn+1A	H00 (Free)		—
RWrn+1B			
RWrn+1C			
RWrn+1D			
RWrn+1E			
RWrn+1F			

*1 Valid when **Pr.128**="50, 51, 60, or 61".
*2 Applicable when **Pr.544**="18".
*3 Applicable when **Pr.544**="28".
*4 "n" indicates a value determined according to the station number setting.

◆Details of input and output signals

The following device No. are those for station 1. For stations 2 and later, the device No. are different. (Refer to the master module manual for correspondence between the device No. and station number)

◆Output signals (master module to inverter)

The output signals from the master module are indicated. (Input signals to inverter)

Device No.	Signal	Description	
RY0	Forward rotation command*3	0: Stop command 1: Forward rotation start	When "1" is set, a start command is input to the inverter. When "1" is set in RY0 and RY1, a stop command is input.
RY1	Reverse rotation command*3	0: Stop command 1: Reverse rotation start	
RY2	High-speed operation command (terminal RH function)*1	Functions assigned to terminals RH, RM, RL, JOG, RT, AU, CS, MRS, STOP, and RES are activated.	
RY3	Middle-speed operation command (terminal RM function)*1		
RY4	Low-speed operation command (terminal RL function)*1		
RY5	Jog operation command (terminal Jog function)*1		
RY6	Second function selection (terminal RT function)*1		
RY7	Current input selection (terminal AU function)*1		
RY8	Selection of automatic restart after instantaneous power failure (terminal CS function)*1, *2		
RY9	Output stop (terminal MRS function)*1		
RYA	Start self-holding selection (terminal STOP function)*1		
RYB	Reset (RES terminal function)*1		
RYC	Monitor command	When "1" is set in RYC, the monitored value is set in the remote register RWr0, 1, 4 to 7, and "1" is set in the monitoring (RXC). While "1" is set in RYC, the monitored data is always updated.	
RYD*5	Frequency setting command / torque command*6 (RAM)	When "1" is set in RYD, the set frequency/torque command (RWw1) is written to RAM of the inverter.*4 After the writing completes, "1" is set in the frequency setting / torque command completion (RXD). Under Real sensorless vector control, vector control, and PM sensorless vector control, the following value is also written to RAM at the same time. • During torque control*8: Torque command value • During speed control / position control: Torque limit value	
RYE*5	Frequency setting command / torque command*6 (RAM, EEPROM)	When "1" is set in RYE, the set frequency/torque command (RWw1) is written to RAM and EEPROM of the inverter. After the writing completes, "1" is set in the frequency setting / torque command completion (RXE). Under Real sensorless vector control, vector control, and PM sensorless vector control, the following value is also written to RAM and EEPROM at the same time. • During torque control*8: Torque command value • During speed control / position control: Torque limit value (**Pr.544** ≠ "24 or 28") To change the frequency consecutively, be sure to write data to the inverter RAM.	
RYF*5	Instruction code execution request	When "1" is set in RYF, processes corresponding to the instruction codes set to RWw2, 10, 12, 14, 16 and 18 are executed. "1" is set in the instruction code execution request (RXF) after completion of instruction codes. When an instruction code execution error occurs, a value other than "0" is set in the reply code (RWr2, 10, 12, 14, 16, 18).	
RY1A	Error reset request flag	When "1" is set in RY1A at an inverter fault, the inverter is reset, then "0" is set in the error status flag (RX1A).*7	

*1 Signal names are initial values. Using **Pr.180 to Pr.189**, you can change input signal functions. Note that some of signals do not accept a command from the network according to the **Pr.338** and **Pr.339** settings. For example, the RES signal (the function assigned to terminal RES) in RYB cannot be controlled via network. Refer to the Instruction Manual (Detailed) of the FR-A800/FR-F800 inverter for details of **Pr.180 to Pr.189**, **Pr.338**, and **Pr.339**.

*2 For the FR-F800-E, no function is assigned in the initial setting.

*3 The signals are fixed. They cannot be changed using parameters.

*4 While "1" is set in the frequency setting command (RYD), the set frequency (RWw1) is always applied.

*5 If "1" is set in these registers at the same time while **Pr.544** = "0," only one of these is executed.

*6 The torque command / torque limit setting is available only for the FR-A800-E.

*7 Refer to page 19 for operation conditions of inverter reset.

*8 Torque control cannot be performed with a PM motor.

◆Input signals (inverter to master module)

The input signals to the master module are indicated. (Output signals from inverter)

Device No.	Signal	Description
RX0	Forward running	0: Other than forward running (during stop or reverse rotation) 1: Forward running
RX1	Reverse running	0: Other than reverse running (during stop or forward rotation) 1: Reverse running
RX2	Running (terminal RUN function)*1	Functions assigned to terminals RUN, SU, OL, IPF, FU, ABC1 and ABC2 activate.
RX3	Up to frequency (terminal SU function)*1	
RX4	Overload alarm (terminal OL function)*1	
RX5	Instantaneous power failure (terminal IPF function)*1	
RX6	Frequency detection (terminal FU function)*1	
RX7	Fault (terminal ABC1 function)*1	
RX8	— (terminal ABC2 function)*1	
RX9	— (DO0 function)*2	Functions assigned to **Pr.313 to Pr.315** are activated.
RXA	— (DO1 function)*2	
RXB	— (DO2 function)*2	
RXC	Monitoring	After "1" is set in the monitor command (RYC), and the monitored value is set in the remote register Rwr0, 1, 4 to 7, "1" is set in this signal. When "0" is set in the monitor command (RYC), "0" is set in this signal.
RXD	Frequency setting completion/torque command setting completion (RAM)*3	After "1" is set in the frequency setting command/torque command (RYD) and the frequency setting command/torque command is written to the inverter RAM, "1" is set in this signal. When "0" is set in the frequency setting command/torque command (RYD), "0" is set in this signal.
RXE	Frequency setting completion/torque command setting completion (RAM, EEPROM)*3	After "1" is set in the frequency setting command/torque command (RYE) and the frequency setting command/torque command is written to the inverter RAM and EEPROM, "1" is set in this signal. When "0" is set in the frequency setting command/torque command (RYE), "0" is set in this signal.
RXF	Instruction code execution completion	After "1" is set in the instruction code execution request (RYF) and the processes corresponding to the instruction codes (RWw2, 10, 12, 14, 16 and 18) are executed, "1" is set in this signal. When "0" is set in the instruction code execution request (RYF), "0" is set in this signal.
RX1A	Error status flag	When an inverter error occurs (protective function is activated), "1" is set in this signal.
RX1B	Remote station ready	When the inverter goes into the ready status upon completion of initial setting after power-on or hardware reset, "1" is set in this signal. When an inverter error occurs (protective function is activated), "0" is set in this signal. The signal is used as an interlock signal during the write to/read from the master module.

*1 Signal names are initial values. Using **Pr.190 to Pr.196**, you can change output signal functions.
Refer to the Instruction Manual (Detailed) of the FR-A800/FR-F800 inverter for details of **Pr.190 to Pr.196**.

*2 Signals are not assigned in the initial setting. Use **Pr.313 to Pr.315** to assign signals to the devices RX9 to RXB. The setting range depends on the inverter. For details, refer to the description of **Pr.190 to Pr.196 (Output terminal function selection)** in the Instruction Manual (Detailed) of the FR-A800/FR-F800 inverter.

*3 The torque command setting is available only for the FR-A800-E.

◆Details of remote register

◆Remote register (master module to inverter)

- Remote register definition

Device No.	Signal	Description
RWw0	Monitor code1, 2	Set the monitor code to be referenced (Refer to page 51). When "1" is set in RYC, data of specified monitored items will be stored in RWr0, RWr1.
RWw1	Set frequency*1, *2	Specify the set frequency or speed (machine speed). At this time, whether to write to RAM or EEPROM is decided with the RYD and RYE settings. After setting the set frequency in this register, set "1" in RYD or RYE to write the frequency. After writing of frequency is completed, "1" is set in RXD or RXE in response to the input command. The setting range is 0 to 590.00 Hz (0.01 Hz increments). Write "59000" when setting 590.00 Hz.
	Torque command value*4	When performing torque control under Real sensorless vector control or vector control with **Pr.544 CC-Link extended setting** = 0, 1, 12, and **Pr.804 Torque command source selection** = 3, 5, specify torque command value. The value is written to the inverter either by RYD or RYE. **Pr.805 Torque command value (RAM)** and **Pr.806 Torque command value (RAM, EEPROM)** are also updated at the same time. The setting range and setting increments depend on the **Pr.804** setting. (Refer to page 52.)
RWw2	Link parameter extended setting/ Instruction code	Set the instruction code for execution of operation mode rewrite, parameter read/write, error reference, error clear, etc. (Refer to page 49.) Set "1" in RYF to execute the corresponding instruction after completing the register setting. "1" is set in RXF after completing the execution of the instruction. When a value other than "0 (100)" is set in **Pr.544**, upper eight bits are link parameter extended setting. Example) When reading **Pr.160**, instruction code is H0200.
RWw3	Write data	Set the data specified by the RWw2 instruction code. (When required) Set "1" in RYF after setting RWw2 and this register. Set "0" when the write code is not required.
RWw4	Monitor code 3	Set the monitor code to be monitored. By setting "1" in RYC after setting, the specified monitored data is stored in RWr4 to 7.
RWw5	Monitor code 4	
RWw6	Monitor code 5	
RWw7	Monitor code 6	
RWw8	Fault history No.	Set how many fault records in past to be read. Back to eight fault records in past can be read. (lower 8 bits is H00) Upper 8 bits: H00 (latest fault) to H07 (eight faults in past) When H08 to HFF is set to the lower 8 bits, the fault record becomes an undetermined value.
RWw9	PID set point*3	Set the PID set point Setting range: "0 to 100.00%" • Input a value 100 times greater than the value to be set For example, input "10000" when setting 100.00%. • Refer to the Instruction Manual (Detailed) of the FR-A800/FR-F800 inverter for details of PID control.
RWwA	PID measured value*3	Set the PID measured value Setting range: "0 to 100.00%"
RWwB	PID deviation*3	Set the PID deviation. Setting range: "-100.00% to 100.00%"
RWwC	Torque command value*4	When **Pr.544** = "14, 18, 24, or 28" and **Pr.804** = "3 or 5" during torque control (Real sensorless vector control / vector control), torque command values can be specified. The value is written to the inverter by RYD or RYE. **Pr.805** and **Pr.806** are also updated at the same time. The setting range and the setting increment depend on the **Pr.804** setting. If the data outside the range is set, the previous setting is retained.
	Torque limit value*4	When **Pr.544** = "14 or 18", **Pr.804** = "3 or 5", and **Pr.810 Torque limit input method selection** = "2" during speed control or position control (Real sensorless vector control / vector control / PM sensorless vector control), torque limit values can be specified. The value is written to the inverter by RYD or RYE. **Pr.805** and **Pr.806** are also updated at the same time. The setting range and the setting increment depend on the **Pr.804** setting (absolute value). If the data outside the range is set, the previous setting is retained.
RWwC, RWwD, RWwE, RWwF	Torque limit level (1st quadrant to 4th quadrant)*4	When **Pr.544** = "24 or 28" and **Pr.810** = "2" during speed control or position control (Real sensorless vector control / vector control / PM sensorless vector control), torque limit values can be specified for each of the 1st to the 4th quadrants. (Setting range: 0 to 40000 (0 to 400%), setting increment: 0.01%) The value is written to the inverter by RYD. (EEPROM write by RYE is disabled.) When "HFFFF" is set in RWwD to RWwF, the RWwC setting is applied to the operation in the target quadrant. When a value within the setting range of **Pr.805** or **Pr.806** is entered in RWwC while **Pr.804** = "3 or 5", the **Pr.805**/**Pr.806** setting is updated. If the data outside the range is set, the previous setting is retained.

(N) Operation via communication and its settings

Device No.	Signal	Description
RWw10, RWw12, RWw14, RWw16, RWw18	Link parameter extended setting/ Instruction code	Set the instruction code (Refer to page 49.) for execution of operation mode rewrite, parameter read/write, error reference, error clear, etc. The instructions are executed in the following order by setting "1" in RYF after completing the register setting: RWw2, 10, 12, 14, 16, then 18. After completing the execution up to RWw18, "1" is set in RXF. Set HFFFF to disable an instruction by RWw10 to 18. (RWw2 is always executed.) The first 8 bits are link parameter extended setting. Example) When reading **Pr.160**, instruction code is H0200.
RWw11, RWw13, RWw15, RWw17, RWw19	Write data	Set the data specified by the instruction code of RWw10, 12, 14, 16, and 18. (when required) RWw10 and 11, 12 and 13, 14 and 15, 16 and 17, and 18 and 19 correspond each other. Set "1" in RYF after setting the instruction codes (RWw10, 12, 14, 16, and 18) and the corresponding register. Set "0" when the write code is not required.

*1 The display can be changed to rotations per minute according to the **Pr.37**, **Pr.144**, and **Pr.811** settings. (**Pr.811** is only available for the FR-A800-E.) For details, refer to the Instruction Manual (Detailed) of the FR-A800/FR-F800 inverter.

*2 When **Pr.541 Frequency command sign selection** = 1, the setting value has either + or -. When the setting value is negative, the command is inversed from starting command.
Setting range: -327.68 Hz to 327.67 Hz (-327.68 to 327.67) 0.01 Hz increments
For details refer to page 41.

*3 When **Pr.128** = "50, 51, 60, 61", they are valid. If the data outside the range is set, the previous setting is retained.
Refer to the Instruction Manual (Detailed) of the FR-A800/FR-F800 inverter for details of **Pr.128**.

*4 The setting is available only for the FR-A800-E.

◆Remote register (inverter to master module)

- Remote register definition

Device No.	Signal	Description
RWr0	First monitor value	When "1" is set in RYC, the specified monitored data is set to the lower 8 bits of the monitor code (RWw0).
RWr1	Second monitor value (Output frequency*1)	When "0" is set to the upper 8 bits of the monitor code (RWw0), the current output frequency is always set. When a value other than "0" is set to the upper 8 bits of the monitor code (RWw0) while "1" is set in RYC, the monitor data specified by the upper 8 bits of the monitor code (RWw0) is set.
RWr2	Reply code (when **Pr.544** = 0)	When "1" is set in RYD or RYE, the reply code for the frequency setting command is set. When "1" is set in RYF, the reply code corresponding to the instruction code RWw2 is set. The value "0" is set for a normal reply and any digit other than "0" is set for data fault, mode error, etc. (Refer to page 49.)
	Reply code 1 (when **Pr.544** ≠ 0)	Lower 8 bits of RWr2 When "1" is set in RYD or RYE, the reply code for the frequency setting command (torque command / torque limit) is set. (Refer to page 49.)
	Reply code 2 (when **Pr.544** ≠ 0)	Upper 8 bits of RWr2 When "1" is set in RYF, the reply code corresponding to the instruction code RWw2 is set. (Refer to page 49.)
RWr3	Read data	For a normal reply, the reply data to the instruction specified by the instruction code is set.
RWr4	Third monitor value	When "1" is set in RYC, the monitored data specified by the monitor code (RWw4 to 7) is saved.
RWr5	Fourth monitor value	
RWr6	Fifth monitor value	
RWr7	Sixth monitor value	
RWr8	Fault record (fault data)	The fault data of fault history No. specified by RWw8 is stored in the lower 8 bits. Fault history No. specified is echo backed to the upper 8 bits.
RWr9	Fault record (output frequency)	Output frequency of the fault history No. specified in RWw8 is stored.
RWrA	Fault record (output current)	Output current of the fault history No. specified in RWw8 is stored.
RWrB	Fault record (output voltage)	Output voltage of the fault history No. specified in RWw8 is stored.
RWrC	Fault record (energization time)	Energization time of the fault history No. specified in RWw8 is stored.
RWr10 to RWr19	Reply code	When "1" is set in RYF, the reply codes corresponding to the instruction code RWw10, 12, 14, 16, and 18 are set. The value "0" is set for a normal reply and other than "0" is set for data fault, mode error, etc. (Refer to page 49.)
	Read data	For a normal reply, the reply data to the instruction specified by the instruction code is set.

*1 When position control is selected for the FR-A800-E, the number of pulses is monitored when **Pr.430** ≠ "9999".

- Reply code definition

  The reply to the instruction execution is set to RWr2, 10, 12, 14, 16, 18.

  When executing the frequency setting (RYD, RYE) or instruction code execution (RYF), check the reply code (RWr2) in the remote register after execution.

	Data	Item	Alarm definition	Remarks
Reply code	H0000	Normal	No error (normal completion of instruction code execution)	• Reply code to RWr2 when **Pr.544** = 0 • Reply code to RWw10, 12, 14, 16, and 18 when **Pr.544** = 18
	H0001	Write mode error	Parameter write was attempted during operation other than a stop in the network operation mode.	
	H0002	Parameter selection error	Unregistered code number was set.	
	H0003	Setting range error	Set data is outside the permissible data range.	
Reply code 1*1	H00	Normal	No error (normal completion of instruction code execution)	Reply code to RWr2 when **Pr.544** ≠ 0
	H01	Write mode error	Parameter write was attempted during operation other than a stop in the network operation mode.	
	H03	Frequency command / torque command / torque limit setting range error	The value outside the range is set.	
Reply code 2	H00	Normal	No error (normal completion of instruction code execution)	
	H01	Write mode error	Parameter write was attempted during operation other than a stop in the network operation mode.	
	H02	Parameter selection error	Unregistered code number was set.	
	H03	Setting range error	Set data is outside the permissible data range.	

*1 The contents of the reply code 1 are changed when torque commands are given or the torque is limited from the FR-A800-E (when **Pr.544**="14, 18, 24, or 28").
The upper 4 bits of the reply code 1 are used as the reply code to the torque command / torque limit, and the lower 4 bits are used as the reply code to the frequency command.

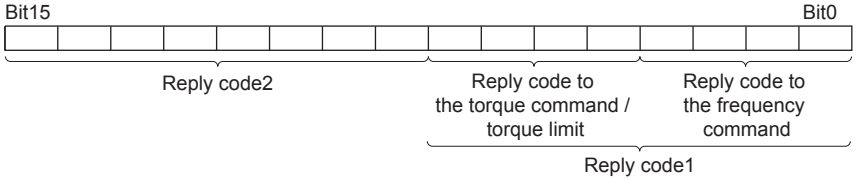

Example) The error code is H0030 when the torque command value is outside the setting range.

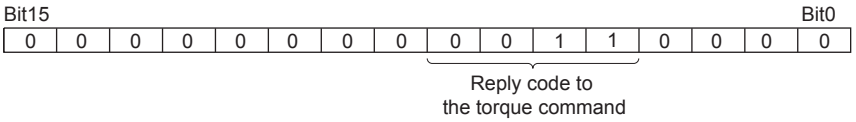

◆Instruction codes

Set the instruction code using a remote register (RWw) (Refer to page 47.)

The definition read by the instruction code is stored in the remote register (RWr). (Refer to page 48.)

Item		Read/ write	Instruction code	Description
Operation mode		Read	H7B	H0000: Network operation mode H0001: External operation mode, External JOG operation mode H0002: PU operation mode, External/PU combined operation mode 1 and 2, PUJOG operation mode
		Write	HFB	H0000: Network operation mode H0001: External operation mode H0002: PU operation mode (**Pr.79** = "6")
Monitor	Output frequency/ speed*1, *2	Read	H6F	H0000 to HFFFF Output frequency: Increments 0.01 Hz (The display can be changed to the rotations per minute using **Pr.37**, **Pr.144** and **Pr.811***6. (Refer to the Instruction Manual (Detailed) of the FR-A800/FR-F800 inverter.))
	Output current	Read	H70	H0000 to HFFFF Output current (hexadecimal): Increments 0.01 A / 0.1 A*4
	Output voltage	Read	H71	H0000 to HFFFF Output voltage (hexadecimal): Increments 0.1 V
	Special monitor	Read	H72	H0000 to HFFFF: Check the data of the monitor selected by the instruction code HF3.
	Special monitor selection No.	Read	H73	H01 to HFF: Monitor selection data Refer to monitor code. (Refer to page 51.)
		Write	HF3*3	

(N) Operation via communication and its settings

<table>
<tr><th colspan="2">Item</th><th>Read/ write</th><th>Instruction code</th><th>Description</th></tr>
<tr><td>Monitor</td><td>Fault history</td><td>Read</td><td>H74 to H77</td><td>H0000 to HFFFF: Last two fault records
 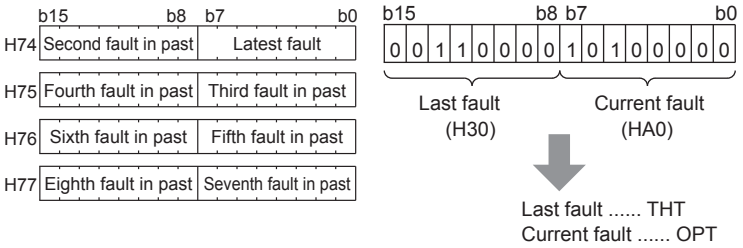

For the data codes or details of fault records, refer to the Instruction Manual (Detailed) of the FR-A800/FR-F800 inverter.</td></tr>
<tr><td colspan="2">Set frequency (RAM)</td><td rowspan="2">Read</td><td>H6D</td><td rowspan="2">Read the set frequency/speed from the RAM or EEPROM.
H0000 to HE678: Set frequency in 0.01 Hz increments
(The display can be changed to the rotations per minute using Pr.37, Pr.144 and Pr.811*6. (Refer to the Instruction Manual (Detailed) of the FR-A800/FR-F800 inverter.))
• For the FR-A800-E, when Pr.544="0, 1, or 12" and Pr.804="3 or 5" during torque control under Real sensorless vector control or vector control, torque command values are read. The setting range depends on Pr.804.</td></tr>
<tr><td colspan="2">Set frequency (EEPROM)</td><td>H6E</td></tr>
<tr><td colspan="2">Set frequency (RAM)*5</td><td>Write</td><td>HED</td><td rowspan="2">Write the set frequency/speed into the RAM or EEPROM.
H0000 to HE678 (0 to 590.00 Hz): frequency in 0.01 Hz increments
(The display can be changed to the rotations per minute using Pr.37, Pr.144 and Pr.811*6. (Refer to the Instruction Manual (Detailed) of the FR-A800/FR-F800 inverter.))
• To change the set frequency consecutively, write data to the inverter RAM. (Instruction code: HED)
• For the FR-A800-E, when Pr.544="0, 1, or 12" and Pr.804="3 or 5" under torque control under Real sensorless vector control or vector control, torque commands are given.
The setting range depends on Pr.804.</td></tr>
<tr><td colspan="2">Set frequency (RAM and EEPROM)*5</td><td>Write</td><td>HEE</td></tr>
<tr><td colspan="2" rowspan="2">Parameter</td><td>Read</td><td>H00 to H63</td><td rowspan="2">• Refer to the instruction code in the Instruction Manual (Detailed) of the FR-A800/FR-F800 inverter to read and write as required.
Write to Pr.77 and Pr.79 is disabled.
When setting Pr.100 and later, set link parameter extended setting.
• Set 65520 (HFFF0) as a parameter value "8888" and 65535 (HFFFF) as "9999".
• When changing the parameter values frequently, set "1" in Pr.342 to write them to the RAM. (Refer to page 15.)</td></tr>
<tr><td>Write</td><td>H80 to HE3</td></tr>
<tr><td colspan="2">Fault history batch clear</td><td>Write</td><td>HF4</td><td>H9696: Clears the fault history as a batch.</td></tr>
<tr><td colspan="2">All parameter clear</td><td>Write</td><td>HFC</td><td>All parameters return to the initial values.
Whether to clear communication parameters or not can be selected according to data. (○: Clear, ×: Not clear)
Refer to the Instruction Manual (Detailed) of the FR-A800/FR-F800 inverter for parameter clear, all clear, and communication parameters.
<table>
<tr><th>Clear type</th><th>Data</th><th>Communication Pr.</th></tr>
<tr><td rowspan="2">Parameter clear</td><td>H9696</td><td>○</td></tr>
<tr><td>H5A5A</td><td>×*7</td></tr>
<tr><td rowspan="2">All parameter clear</td><td>H9966</td><td>○</td></tr>
<tr><td>H55AA</td><td>×*7</td></tr>
</table>
When clear is executed for H9696 or H9966, communication-related parameter settings also return to the initial values. When resuming operation, set the parameters again. Executing clear will clear the instruction code HEC, HF3, and HFF settings.</td></tr>
<tr><td colspan="2">Inverter reset</td><td>Write</td><td>HFD</td><td>H9696: Resets the inverter.</td></tr>
<tr><td colspan="2" rowspan="2">Link parameter extended setting*8</td><td>Read</td><td>H7F</td><td rowspan="2">Parameter settings are changed according to the instruction code settings.
Refer to the Instruction Manual (Detailed) of the FR-A800/FR-F800 inverter for instruction code (extended) settings.</td></tr>
<tr><td>Write</td><td>HFF</td></tr>
<tr><td colspan="2" rowspan="2">Second parameter changing*9</td><td>Read</td><td>H6C</td><td rowspan="2">Read or write of bias and gain parameters (instruction codes H5E to H61 and HDE to HE1 with the link parameter extended setting = "1", H11 to H23 and H91 to HA3 with the link parameter extended setting = "9").
H00: Frequency*10
H01: Analog value set in parameters
H02: Analog value input from the terminal</td></tr>
<tr><td>Write</td><td>HEC</td></tr>
</table>

*1 When "100" is set in **Pr.52 Operation panel main monitor selection**, frequency setting is monitored during a stop and output frequency is monitored during running.
*2 When position control is selected for the FR-A800-E, the number of pulses is monitored when **Pr.430** ≠ "9999".
*3 Write data is in hexadecimal, and only last two digits are valid. (The upper two digits are ignored.)
*4 Differs according to capacities.
*5 Setting from the remote register (RWw1) is also available.
*6 **Pr.811** is only available for the FR-A800-E.
*7 Turning OFF the power supply while clearing parameters with H5A5A or H55AA sets back the communication parameter settings to the initial settings.
*8 Setting is valid only when **Pr.544** = "0". When **Pr.544** ≠ "0", set using RWw2 or RWw10, 12, 14, 16, or 18. (Refer to page 47.)
*9 Reading or writing is available when the link parameter extended setting = "1 or 9".
*10 Gain frequencies can be written using **Pr.125** (instruction code H99) and **Pr.126** (instruction code H9A) also.

NOTE

- When the 32-bit parameter setting or monitor description are read and the read value exceeds HFFFF, the reply data will be HFFFF.

◆Monitor codes

Information about the inverter can be monitored by setting the special monitor selection No. of the instruction code and monitor code using the remote registers, RWw0 and RWw4 to 7.

- For the monitor code (RWw0), select the first monitor description (RWr0) from the lower 8 bits and the second monitor description (RWr1) from the upper 8 bits.
  (Example) When output current is selected for the first monitor (RWr0) and running speed is selected for the second monitor (RWr1) → monitor code (RWw0) is H0602
- When **Pr.544** = "12, 14, or 18", descriptions of monitor codes 3 (RWw4) to 6 (RWw7) can be selected.

Monitor code	Second monitor description (the first 8 bits)	First, third to sixth monitor description (the last 8 bits)	Increments
H00	Output frequency	No monitoring (monitor value is 0)	0.01 Hz
H01	Output frequency		0.01 Hz
H02	Output current		0.01 A/0.1 A
H03	Output voltage		0.1 V
. . .	. . .		. . .

NOTE

- The monitor codes from H01 and up and their contents are the same as those of the RS-485 communication dedicated monitor.
  For the details of the monitor code and monitor description, refer to the section of the monitor display in the Instruction Manual (Detailed) of the FR-A800/FR-F800 inverter.
- When the remote registers RWw0 and RWw4 to 7 are used for monitoring, H00 (output frequency), H01 (output frequency), and H05 (set frequency) always indicate the frequency regardless of the settings of **Pr.37**, **Pr.144**, and **Pr.811**. (**Pr.811** is only available for the FR-A800-E.)

◆Torque command / torque limit using the CC-Link IE Field Network Basic (only for the FR-A800-E)

Torque commands can be given or the torque can be limited on the CC-Link IE Field Network Basic under Real sensorless vector control, Vector control, or PM sensorless vector control. The value is used to limit the torque during speed control or position control, and to give a torque command during torque control. To limit the torque, set **Pr.810 Torque limit input method selection** ="2". The torque command / torque limit setting method can be selected using **Pr.804 Torque command source selection**. (Torque control cannot be performed with a PM motor.)

Pr.	Name	Initial value	Setting range	Description
804	Torque command source selection	0	0	Torque command by terminal 1 analog input
			1	Torque command / torque limit using the CC-Link IE Field Network Basic • Torque command / torque limit (-400% to 400%) by the parameter setting (**Pr.805** or **Pr.806**)*1, *2
			2	Torque command by the pulse train input (FR-A8AL)
			3	Torque command / torque limit using the CC-Link IE Field Network Basic • Torque command / torque limit (-400% to 400%) by the parameter setting (**Pr.805** or **Pr.806**)*1, *2 • Setting is available using the remote register RWw1 or RWwC. (-400% to 400%)*2
			4	Torque command by 16 bit digital input (FR-A8AX)
			5	Torque command / torque limit using the CC-Link IE Field Network Basic • Torque command / torque limit (-327.68% to 327.67%) by the parameter setting (**Pr.805** or **Pr.806**)*1, *2 • Setting is available using the remote register RWw1 or RWwC. (-327.68% to 327.67%)*2
			6	Torque command / torque limit using the CC-Link IE Field Network Basic • Torque command / torque limit (-327.68% to 327.67%) by the parameter setting (**Pr.805** or **Pr.806**)*1, *2
810	Torque limit input method selection	0	0	Internal torque limit (torque limited by parameter settings)
			1	External torque limit (torque limited by terminals 1 and 4)
			2	Internal torque limit 2 (torque limit using the CC-Link IE Field Network Basic)

*1 Can also be set from operation panel or parameter unit.
*2 When a negative value is set as the torque limit, the torque is limited by the absolute value.

◆List of I/O devices whose function is changed according to the parameter settings and the control method

Pr.544 setting	I/O device	V/F control / Advanced magnetic flux vector control	Real sensorless vector control / vector control / PM sensorless vector control	
			Speed control / position control	Torque control*4
—	RYD	Frequency setting command (RAM)	Frequency setting / torque limit command (RAM)	Torque command (RAM)
—	RYE	Frequency setting command (RAM, EEPROM)	Frequency setting / torque limit command (RAM, EEPROM)	Torque command (RAM, EEPROM)
—	RXD	Frequency setting completion (RAM)	Frequency setting / torque limit completion (RAM)	Torque command completion (RAM)
—	RXE	Frequency setting completion (RAM, EEPROM)	Frequency setting / torque limit completion (RAM, EEPROM)	Torque command completion (RAM, EEPROM)
0, 1, 12	RWw1	Set frequency	Set frequency	Torque command*1
14, 18, 24, 28				—
0, 1, 12	RWwC	—	—	—
14, 18			Torque limit*1, *2	Torque command*1
24, 28			Torque limit (1st quadrant)*2, *3	Torque command*1
24, 28	RWwD to RWwF	—	Torque limit (2nd quadrant to 4th quadrant)*2, *3	—

*1 **Pr.804** ="3 or 5" must be set.
*2 **Pr.810** = "2" must be set.
*3 RYE is disabled.
*4 Torque control cannot be performed with a PM motor.

◆Torque command setting method and parameter for speed limit

Pr.804 setting	Pr.544 setting	Torque command setting method (Any method below can be chosen)	Parameter for speed limit
3, 5	0, 1, 12	• Set the torque command value in RWwn+1, and "1" in RYD or RYE. • Set the instruction code HED or HEE in RWwn+2, the torque command value in RWwn+3, and "1" in RYF. (Torque command value can be read by the instruction code H6D and H6E.) • Set H08 in the link parameter extended setting (HFF), the instruction code H85 or H86 in RWwn+2, the torque command value in RWwn+3, and "1" in RYF. (write to **Pr.805** or **Pr.806**)	**Pr.808**, **Pr.809**
	14, 18, 24, 28	• Set the torque command value in RWwn+C, and "1" in RYD or RYE. • Set H08 in the link parameter extended setting (HFF), the instruction code H85 or H86 in RWwn+2, the torque command value in RWwn+3, and "1" in RYF. (write to **Pr.805** or **Pr.806**)	**Pr.807**
1, 6	0, 1, 12, 14, 18, 24, 28	Set H08 in the link parameter extended setting (HFF), the instruction code H85 or H86 in RWwn+2, the torque command value in RWwn+3, and "1" in RYF. (write to **Pr.805** or **Pr.806**)	
0, 4	—	Torque command using the CC-Link IE Field Network Basic is not available.	

◆Torque limit setting method

Pr.804 setting	Pr.810 setting	Pr.544 setting	Torque limit setting method (Any method below can be chosen)
3, 5	2	14, 18	• Set the torque limit value in RWwn+C, and "1" in RYD or RYE. • Set H08 in the link parameter extended setting (HFF), the instruction code H85 or H86 in RWwn+2, the torque limit value in RWwn+3, and "1" in RYF. (write to **Pr.805** or **Pr.806**)
		24, 28	• Set the torque limit value individually for each of the four quadrants in RWwn+C to RWwn+F, and set "1" in RYD. (EEPROM write by RYE is disabled.) • Set H08 in the link parameter extended setting (HFF), the instruction code H85 or H86 in RWwn+2, the torque limit value in RWwn+3, and "1" in RYF. (write to **Pr.805** or **Pr.806**)
1, 6		0, 1, 12, 14, 18, 24, 28	Set H08 in the link parameter extended setting (HFF), the instruction code H85 or H86 in RWwn+2, the torque limit value in RWwn+3, and "1" in RYF. (write to **Pr.805** or **Pr.806**)

◆Relationship between the Pr.804 setting, the setting range, and the actual torque command / torque limit (when setting is made using the CC-Link IE Field Network Basic)

Pr.804 setting	Setting range	Actual torque command	Actual torque limit
1, 3	600 to 1400 (1% increments)*1	-400 to 400%	0 to 400%
5, 6	-32768 to 32767 (two's complement)*1	-327.68 to 327.67%	0 to 327.67%

*1 The torque limit setting is defined as an absolute value.

◆Programming examples

This chapter provides programming examples which control the inverter with sequence programs.

Item	Program example	Refer to page
Reading the inverter status	Reading the inverter status from the buffer memory of the master station	55
Setting the operation mode	Selecting the network operation mode	56
Setting the operation commands	Commanding the forward rotation and middle speed signals	56
Setting the monitoring function	Monitoring the output frequency	57
Reading a parameter value	Reading the value of **Pr.7 Acceleration time**	57
Writing a parameter value	Setting "3.0 s" in **Pr.7 Acceleration time**	58
Setting the running frequency (running speed)	Setting to 50.00 Hz	58
Reading the fault records	Reading the inverter faults	59
Inverter reset	Perform inverter reset at an inverter alarm occurrence.	59

- System configuration example (when the MELSEC iQ-R series programmable controller is used)

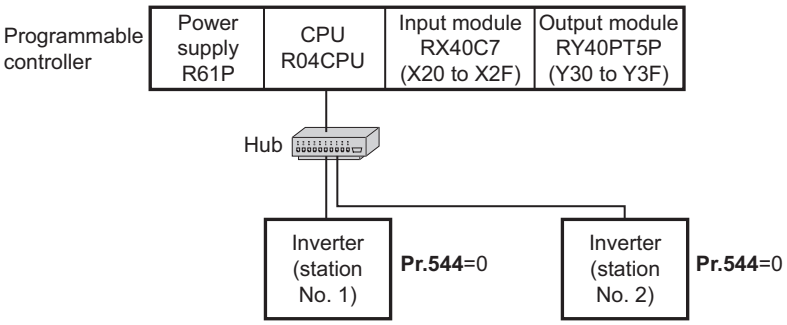

- Network parameter setting of the master station

  Network parameters are set as below.

Item	Setting conditions
Start I/O No.	0000
Type	Master
All connect count	2
Remote input (RX)	X1000
Remote output (RY)	Y1000
Remote register (RWr)	W0

Item	Setting conditions
Remote register (RWw)	W100
Retry count	3

- The relation between the device of the programmable controller CPU and remote I/O (RX, RY) of the remote device station is as follows: The devices used actually are indicated in shaded regions.

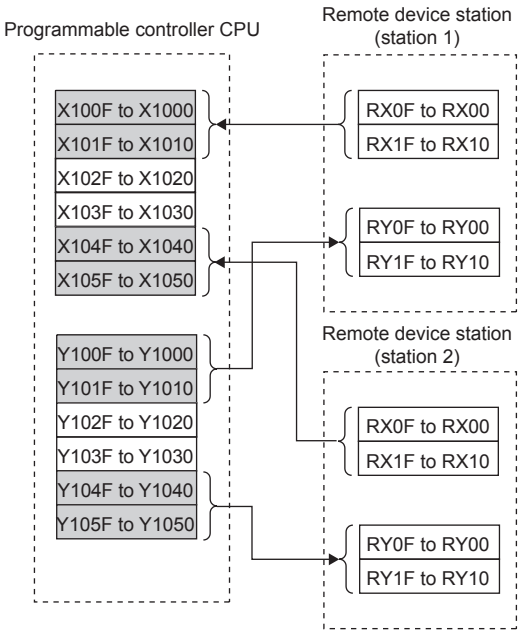

- The relation between the device of the programmable controller CPU and remote register (RWw, RWr) of the remote device station is as follows: The devices used actually are indicated in shaded regions.

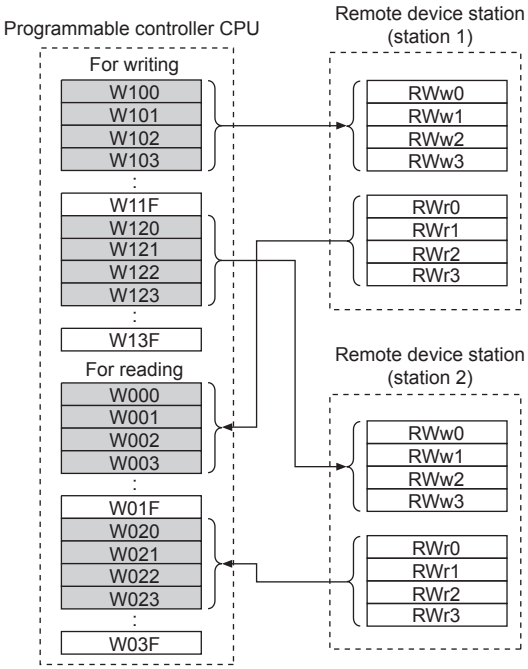

◆Program example for reading the inverter status

The following program turns on Y00 of the output unit when station 1 inverter is running

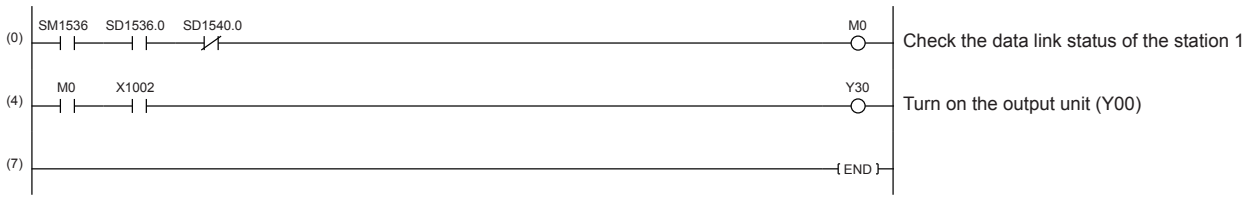

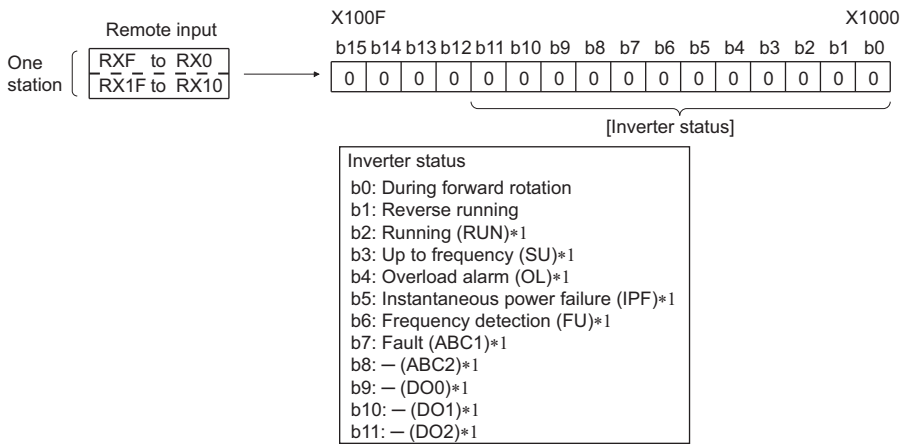

*1 These signals are initial values. You can change output signals using **Pr.190 to Pr.196**, **Pr.313 to Pr.315 (Output terminal function selection)**.

◆Program example for setting the operation mode

The following explains a program to write various data to the inverter.

The following explains a program to change the operation mode of station 1 inverter to network operation.

- Operation mode write code: HFB (hexadecimal)
- Network operation set data: H0000 (hexadecimal) (Refer to page 49.)
- The reply code at the time of instruction code execution is set to D2. (Refer to page 49.)

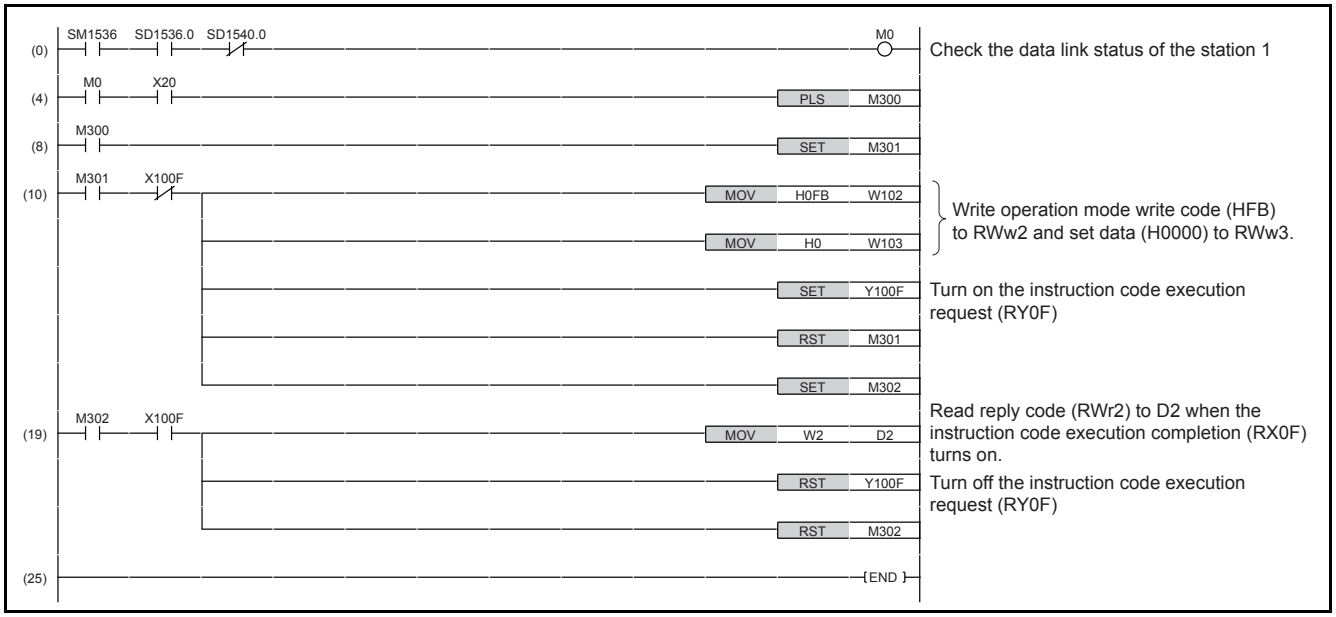

◆Program example for setting the operation commands

The following program gives a forward command and middle speed command to station 1 inverter

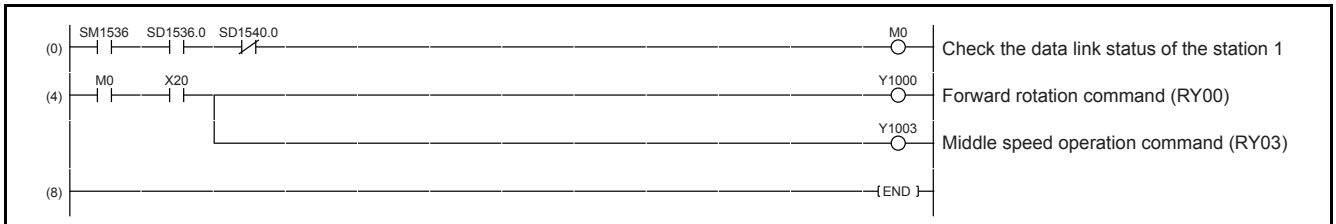

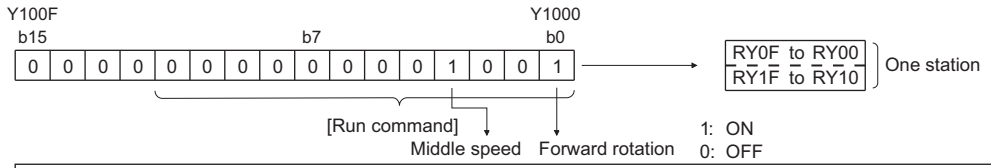

Run command	
b0 : Forward rotation command	b6 : Second function selection (RT)*1
b1 : Reverse rotation command	b7 : Terminal 4 input selection (AU)*1
b2 : High-speed operation command (RH)*1	b8 : Selection of automatic restart after instantaneous power failure (CS)*1, *2
b3 : Middle-speed operation command (RM)*1	b9 : Output stop (MRS)*1
b4 : Low-speed operation command (RL)*1	b10 : Start self-holding selection (STOP)*1
b5 : Jog operation selection (JOG)*1	b11 : Inverter reset (RES)*1

*1 These signals are initial values. You can change input signals using **Pr.180 to Pr.189 (Input terminal function selection)**.
Note that some of the signals do not receive a command from the programmable controller depending on the setting.
(Refer to the Instruction Manual (Detailed) of the FR-A800/FR-F800 inverter for details.)

*2 For the FR-F800-E, no function is assigned in the initial setting.

◆Program example for monitoring the output frequency

The following explains a program to read monitor functions of the inverter.

The following program reads the output frequency of station 1 inverter to D1.
Output frequency read code: H0001 (hexadecimal)
Refer to page 51 for the monitor codes.
(Example) The output frequency of 60Hz is indicated as H1770 (6000).

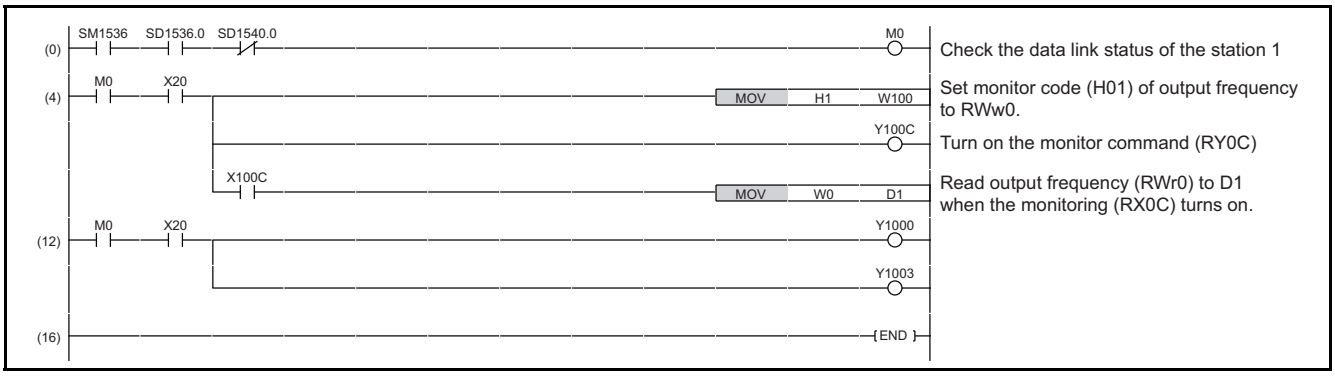

◆Program example for parameter reading

The following program reads **Pr.7 Acceleration time** of station 1 inverter to D1.

- **Pr.7 Acceleration time** reading instruction code: H07 (hexadecimal)
- Refer to the Instruction Manual (Detailed) of the FR-A800/FR-F800 inverter for details of the parameter instruction codes.
- The reply code at the time of instruction code execution is set to D2. (Refer to page 49.)

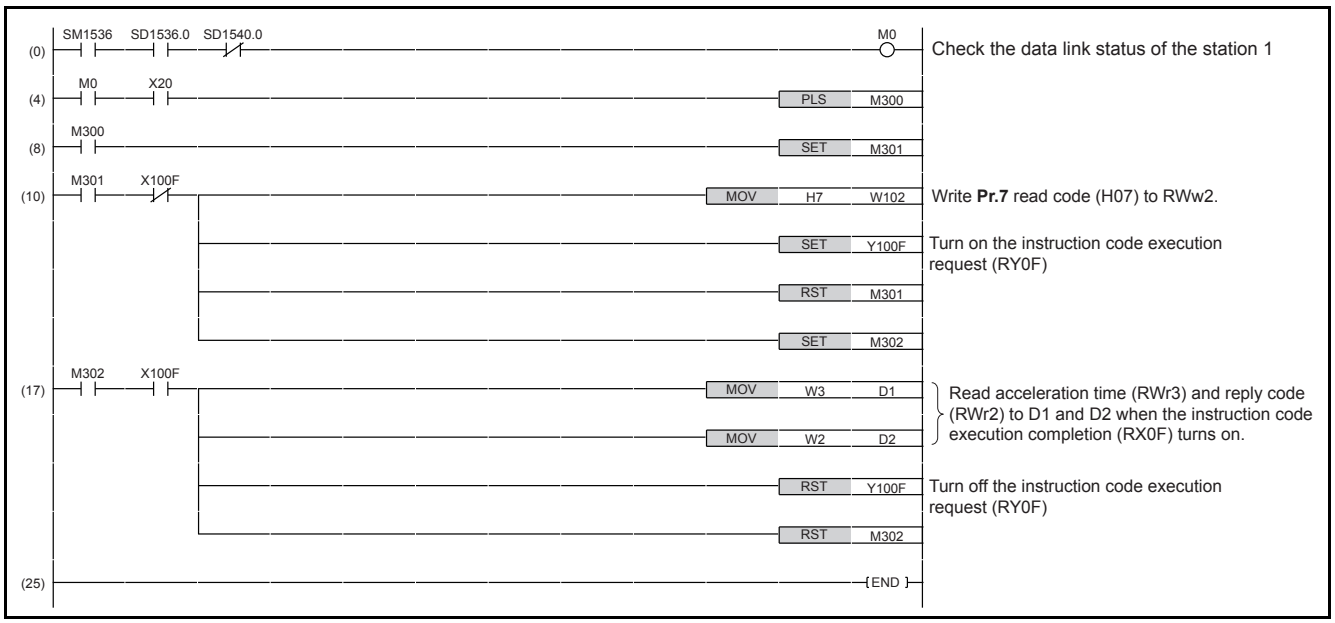

NOTE

- For parameters having numbers 100 and later, change their link parameter extended settings (set them to other than H00). Refer to the Instruction Manual (Detailed) of the FR-A800/FR-F800 inverter for details.

◆Program example for parameter writing

The following program changes the setting of **Pr.7 Acceleration time** of station 1 inverter to 3.0 s.

- Acceleration time writing instruction code: H87 (hexadecimal)
- Acceleration time set data: K30 (decimal)

For the parameter instruction codes, refer to the Instruction Manual (Detailed) of the FR-A800/FR-F800 inverter.

The reply code at the time of instruction code execution is set to D2. (Refer to page 49.)

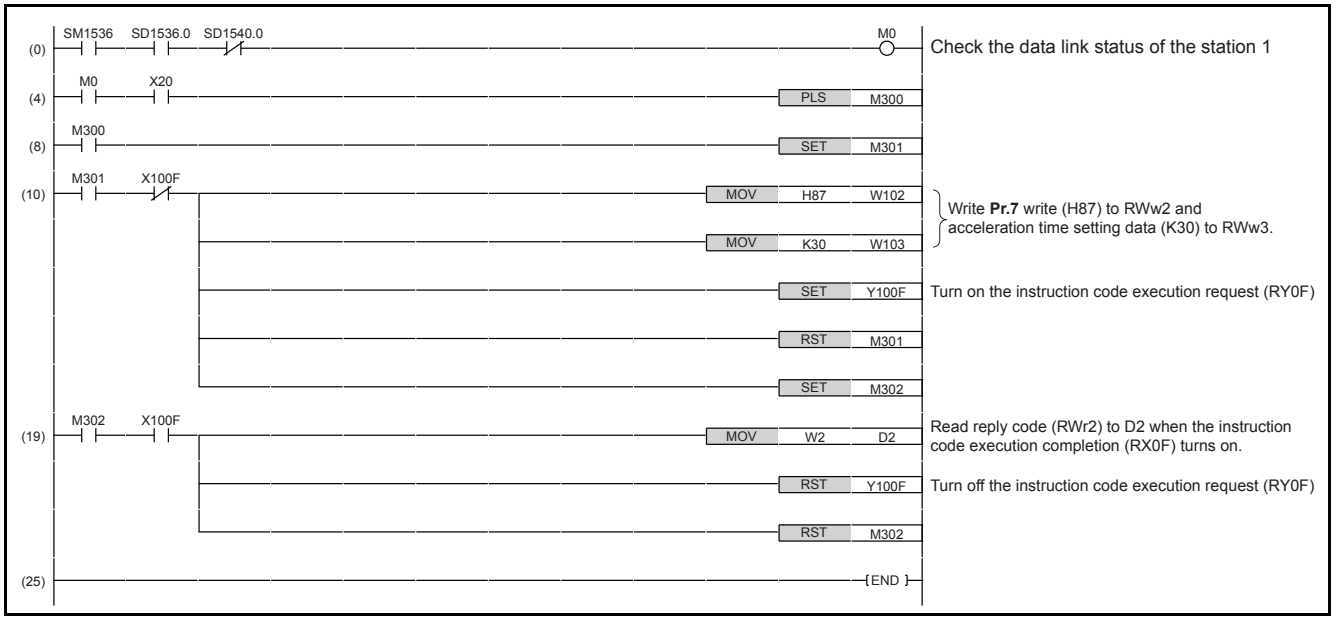

NOTE

- For parameters having numbers 100 and later, change their link parameter extended settings (set them to other than H00). Refer to the parameter list of the Instruction Manual (Detailed) of the FR-A800/FR-F800 inverter for settings.
- For other functions, refer to the instruction codes. (Refer to page 49.)

◆Program example for setting the running frequency

- The following program example changes the running frequency of station 1 inverter to 50.00 Hz
  Set frequency: K5000 decimal
  The reply code at the time of instruction code execution is set to D2. (Refer to page 49.)

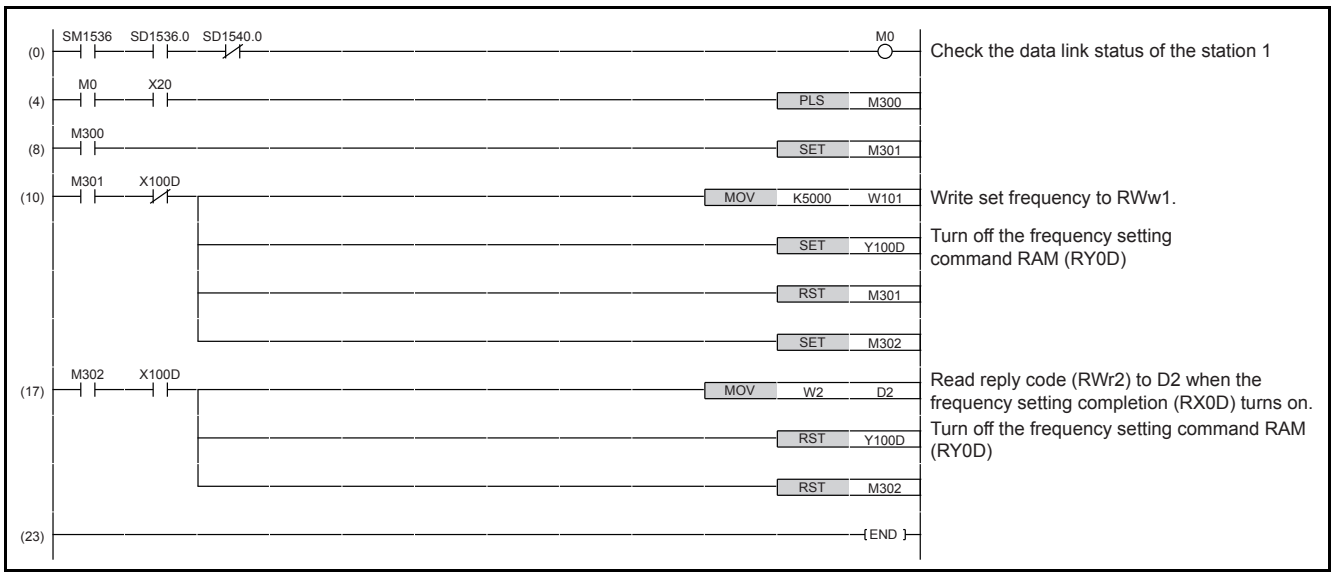

- To continuously change the running frequency from the programmable controller
  When the frequency (speed) setting completion (example: X100D) switches on, make sure that the reply code in the remote register is 0000H and change the set data (example: W101) continuously.

- Program example for writing data to EEPROM

  Modify the program on page 58 as follows:

  Frequency setting command Y100D → Y100E

  Frequency setting completion X100D → X100E

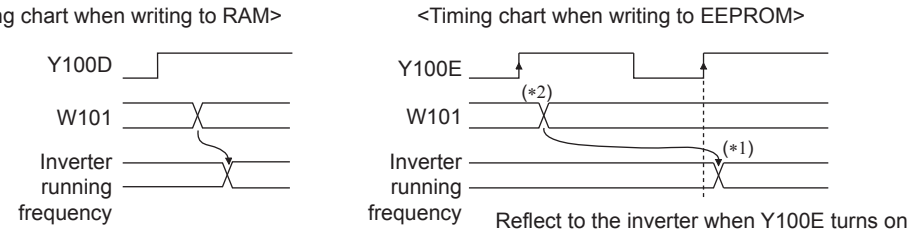

*1 For EEPROM, write is made only once when Y100E is switched on.

*2 If the set data is changed with Y100E on, it is not reflected on the inverter.

◆Program example for fault record reading

The following program reads fault records of station 1 inverter to D1.

- Fault history No. 1, No. 2 reading instruction code: H74 (hexadecimal)

For the error codes, refer to the Instruction Manual (Detailed) of the FR-A800/FR-F800 inverter.

The reply code at the time of instruction code execution is set to D2. (Refer to page 49.)

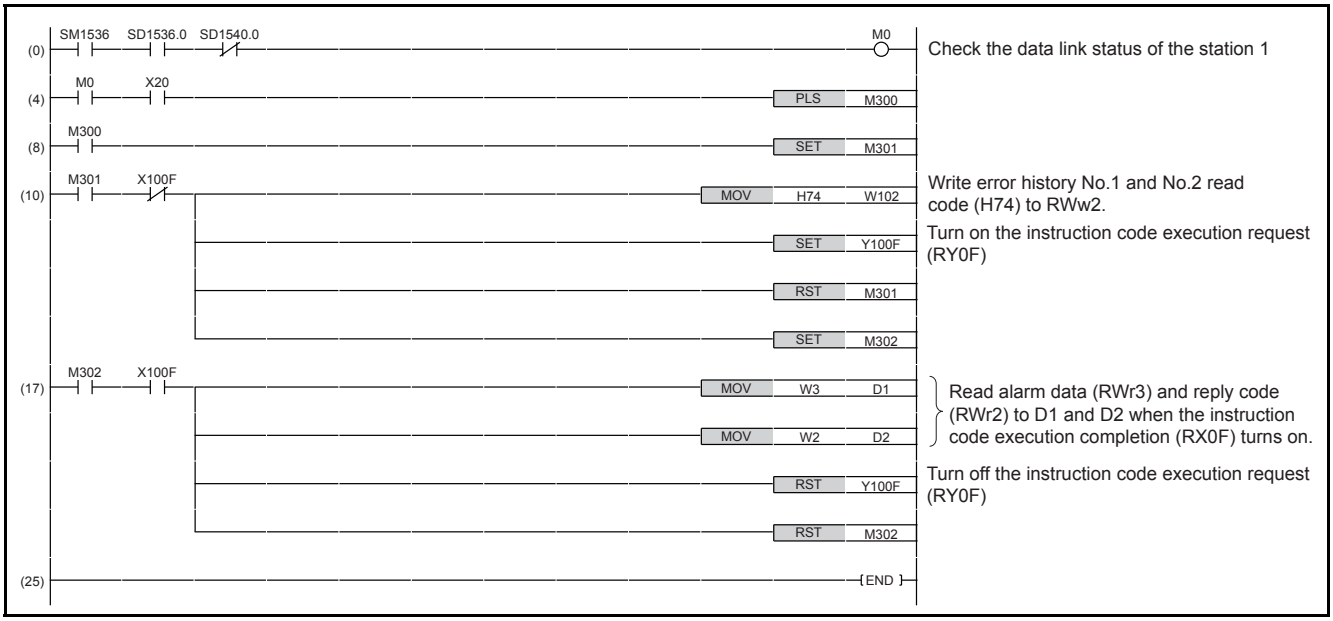

◆Program example for resetting the inverter at inverter error

The following is a program example for resetting station 1 inverter.

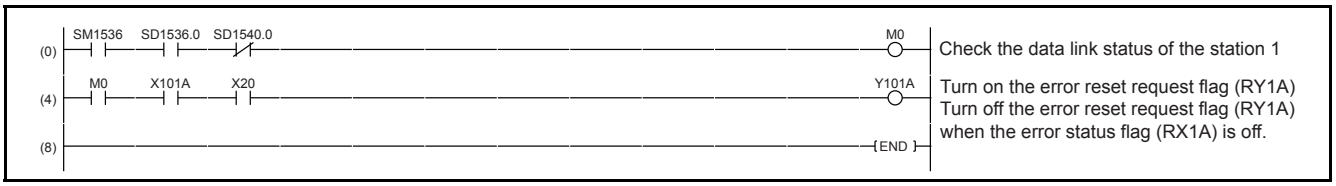

NOTE

- The above inverter reset using RY1A may be made only when an inverter error occurs. When **Pr.349 Communication reset selection/Ready bit status selection** = "0 or 100", inverter reset is available independently of the operation mode.
- When using the instruction code execution request (RYF) with the instruction code (HFD) and data (H9696) to reset the inverter, set a value other than "0" in **Pr.340 Communication startup mode selection** or change the operation mode to the network operation mode. (For the program example, refer to page 56.)
- Refer to page 19 for operation conditions of inverter reset.

◆Instructions

◆Operating and handling instructions

- The inverter only accepts the commands from the programmable controller during operation using the CC-Link IE Field Network Basic.
  The run command from external and parameter unit is ignored.
- If multiple inverters have the same station number, the communication cannot be performed properly.
- The inverter protective function (E.EHR) is activated if data communication stops for more than the time set in **Pr.1432 Ethernet communication check time interval** due to a fault such as a programmable controller fault or a break in the Ethernet cable, during operation through the CC-Link IE Field Network Basic.
- If the programmable controller (master station) is reset during operation through the CC-Link IE Field Network Basic or if the programmable controller is powered off, data communication stops and the inverter protective function (E.EHR) is activated.
  To reset the programmable controller (master station), switch the operation mode to the external operation once, then reset the programmable controller.
- When **Pr.340** = "0 (initial value)", any inverter whose main power is restored is reset to return to the external operation mode. To resume the network operation, therefore, set the operation mode to the network operation using the programmable controller program.
  Set a value other than "0" in **Pr.340** to start in the network operation mode after inverter reset. (For the details of **Pr.340**, refer to the Instruction Manual (Detailed) of the FR-A800/FR-F800 inverter.)

◆Troubleshooting

Description	Check point
Operation mode does not switch to the network operation mode	Check that the Ethernet cable is installed correctly. (Check for a fault such as a contact fault or break in the cable.)
	Check that the inverter is in the External operation mode.
	Check that the operation mode switching program is running.
	Check that the operation mode switching program has been written correctly.
Inverter does not start in the Network operation mode	Check that the inverter starting program is running.
	Check that the inverter starting program has been written correctly.
	Check that **Pr.338 Communication operation command source** is not set to external.

Parameters referred to

Pr.37 Speed display, Pr.144 Speed setting switchover ☞ **Instruction Manual (Detailed) of the FR-A800/FR-F800 inverter**
Pr.811 Set resolution switchover ☞ **Instruction Manual (Detailed) of the FR-A800 inverter**

2.5.6 MODBUS/TCP

The MODBUS/TCP protocol allows transmission of MODBUS messages via Ethernet communication.

◆Communication specifications

- The communication specifications are given below.

Item		Description
Communication protocol		MODBUS/TCP protocol
Conforming standard		Open MODBUS/TCP specification
Waiting time setting		Not used
Maximum number of connections		3
Slave function (server)	Number of simultaneously acceptable request messages	1

◆Initial setting

- To select MODBUS/TCP for the application, set "502" in any of **Pr.1427 to Pr.1429 Ethernet function selection 1 to 3**. (Refer to page 22.)
- To limit the network devices that send the operation or speed command through the Ethernet network (MODBUS/TCP), set the range of IP addresses (**Pr.1449 to Pr.1454**). (Refer to page 25.)
- Set the interval of the communication check (signal loss detection) time in **Pr.1432 Ethernet communication check time interval** for all devices with IP addresses in the range specified for Ethernet command source selection (**Pr.1449 to Pr.1454**). (Refer to page 26.)

◆Message format

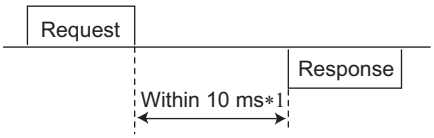

*1 The chart shows the performance when the inverter is connected to a master on a 1:1 basis. (It takes 10 ms or more for parameter clear, all parameter clear, or accessing multiple registers.)

- Query
  A message is sent to the slave (the inverter) having the address specified by the master.

- Normal response
  After the query from the master is received, the slave executes the request function, and returns the corresponding normal response to the master.

- Error response
  When an invalid function code, address or data is received by the slave, the error response is returned to the master. This response is appended with an error code that indicates the reason why the request from the master could not be executed.
  This response cannot be returned for errors, detected by the hardware, frame error and header check error.

◆Message frame (protocol)

- Communication method

  Basically, the master sends a query message (inquiry), and slaves return a response message (response). At normal communication, the transaction identifier, protocol identifier, and function code are copied as they are, and at erroneous communication (illegal function code or data code), bit 7 (H80) of the function code is turned ON, and the error code is set at data bytes.

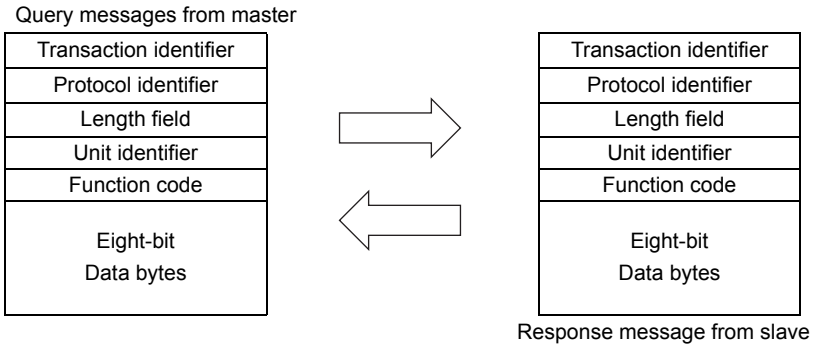

  Message frames comprise the six message fields shown in the figures above.

- Details of protocol

  The following table explains the six message fields.

Transaction identifier	Protocol identifier	Length field	Unit identifier	Function	Data
2 × 8 bits	2 × 8 bits	2 × 8 bits	8 bits	8 bits	n × 8 bits

Message field	Description
Transaction identifier	The master adds the data for the purpose of transaction control. The same data is returned in the response from the slave.
Protocol identifier	Fixed to 0. (When the slave receives data other than 0, it does not send the response message.) 0 is returned in the response from the slave.
Length field	The data length from the unit identifier to the data is stored in byte.
Unit identifier	Fixed to 255
Function code	1 to 255 can be set in single byte length (8 bits) for the function code. The master sets the function to be sent to the slave as the request, and the slave performs the requested operation. "Function code list" summarizes the supported function codes. An error response is generated when a function code other than "Function code list" is set. At a response from the slave, the function code set by the master is returned in the case of a normal response. At an error response, H80 and the function code are returned.
Data	The format changes according the function code. (Refer to page 64.) The data, for example, includes the byte count, number of bytes, and accessing content of holding registers.

◆Function code list

Function name	Read/write	Code	Outline	Message format Refer to page
Read holding register	Read	H03	The data of the holding registers is read. The various data of the inverter can be read from MODBUS registers. System environmental variable (Refer to page 70.) Real time monitor (Refer to the Instruction Manual (Detailed) of the FR-A800/FR-F800 inverter.) Fault history (Refer to page 72.) Model information monitor (Refer to page 72.) Inverter parameters (Refer to page 71.)	page 64
Preset single register	Write	H06	Data is written to a holding register. Data can be written to MODBUS registers to output instructions to the inverter or set parameters. System environmental variable (Refer to page 70.) Inverter parameters (Refer to page 71.)	page 65
Diagnostics	Read	H08	Functions are diagnosed. (communication check only) A communication check can be made since the query message is sent and the query message is returned as it is as the return message (subfunction code H00 function). Subfunction code H00 (Return query data)	page 66
Preset multiple registers	Write	H10	Data is written to multiple consecutive holding registers. Data can be written to consecutive multiple MODBUS registers to output instructions to the inverter or set parameters. System environmental variable (Refer to page 70.) Inverter parameters (Refer to page 71.)	page 67
Read holding register access log	Read	H46	The number of registers that were successfully accessed by the previous communication is read. Queries by function codes H03 and H10 are supported. The number and start address of holding registers successfully accessed by the previous communication are returned. "0" is returned for both the number and start address for queries other than function code H03 and H10. When the connection is closed, the data in the log is cleared.	page 68

◆Read holding register (reading data of holding registers) (H03 or 03)

• Query message

a. Transaction identifier		b. Protocol identifier		c. Length field		d. Unit identifier	e. Function	f. Starting address		g. No. of points	
H (8 bits)	L (8 bits)	H (8 bits)	L (8 bits)	H (8 bits)	L (8 bits)	(8 bits)	H03 (8 bits)	H (8 bits)	L (8 bits)	H (8 bits)	L (8 bits)

• Normal response (Response message)

a. Transaction identifier		b. Protocol identifier		c. Length field		d. Unit identifier	e. Function	h. Byte count	i. Data		
H (8 bits)	L (8 bits)	H (8 bits)	L (8 bits)	H (8 bits)	L (8 bits)	(8 bits)	H03 (8 bits)	(8 bits)	H (8 bits)	L (8 bits)	... (n × 16 bits)

• Query message setting

Message		Description
a	Transaction identifier	The master adds the data for the purpose of transaction control. The same data is returned in the response from the slave.
b	Protocol Identifier	Fixed to 0. (When the slave receives data other than 0, it does not send the response message.) 0 is returned in the response from the slave.
c	Length field	The data length from the unit identifier to the data is stored in byte.
d	Unit identifier	Fixed to 255
e	Function	Set H03.
f	Starting address	Set the holding register address from which to start reading the data. Starting address = start register address (decimal) - 40001 For example, when start register address 0001 is set, the data of holding register address 40002 is read.
g	No. of points	Set the number of holding registers for reading data. Data can be read from up to 125 registers.

• Content of normal response

Message		Description
h	Byte count	The setting range is H02 to HFA (2 to 250). Twice the number of reads specified by (g) is set.
i	Data	The amount of data specified by (g) is set. Read data is output Hi bytes first followed by Lo bytes, and is arranged as follows: data of start address, data of start address+1, data of start address+2, and so forth.

Example) Read the register values of 41004 **(Pr.4)** to 41006 **(Pr.6)** from the inverter.

Query message

Transaction identifier		Protocol identifier		Length field		Unit identifier	Function	Starting address		No. of points	
*1	*1	H00 (8 bits)	H00 (8 bits)	H00 (8 bits)	H06 (8 bits)	HFF (8 bits)	H03 (8 bits)	H03 (8 bits)	HEB (8 bits)	H00 (8 bits)	H03 (8 bits)

*1 A given value is set.

Normal response (Response message)

Transaction identifier		Protocol identifier		Length field		Unit identifier	Function	Byte count	Data					
*2	*2	H00 (8 bits)	H00 (8 bits)	H00 (8 bits)	H09 (8 bits)	HFF (8 bits)	H03 (8 bits)	H06 (8 bits)	H17 (8 bits)	H70 (8 bits)	H0B (8 bits)	HB8 (8 bits)	H03 (8 bits)	HE8 (8 bits)

*2 The values are the same as those in the query message.

Read value

Register 41004 **(Pr.4)**: H1770 (60.00 Hz)

Register 41005 **(Pr.5)**: H0BB8 (30.00 Hz)

Register 41006 **(Pr.6)**: H03E8 (10.00 Hz)

◆Preset single register (writing data to holding registers) (H06 or 06)

- The content of the system environmental variables and inverter parameters (refer to MODBUS register on page 70) assigned to the holding register area can be written.
- Query message

a. Transaction identifier		b. Protocol identifier		c. Length field		d. Unit identifier	e. Function	f. Register address		g. Preset data	
H (8 bits)	L (8 bits)	H (8 bits)	L (8 bits)	H (8 bits)	L (8 bits)	(8 bits)	H06 (8 bits)	H (8 bits)	L (8 bits)	H (8 bits)	L (8 bits)

- Normal response (Response message)

a. Transaction identifier		b. Protocol identifier		c. Length field		d. Unit identifier	e. Function	f. Register address		g. Preset data	
H (8 bits)	L (8 bits)	H (8 bits)	L (8 bits)	H (8 bits)	L (8 bits)	(8 bits)	H06 (8 bits)	H (8 bits)	L (8 bits)	H (8 bits)	L (8 bits)

- Query message setting

Message		Description
a	Transaction identifier	The master adds the data for the purpose of transaction control. The same data is returned in the response from the slave.
b	Protocol identifier	Fixed to 0. (When the slave receives data other than 0, it does not send the response message.) 0 is returned in the response from the slave.
c	Length field	The data length from the unit identifier to the data is stored in byte.
d	Unit identifier	Fixed to 255
e	Function	Set H06.
f	Register address	Set the holding register address to write data to. Register address = holding register address (decimal) - 40001 For example, when register address 0001 is set, data is written to holding register address 40002.
g	Preset data	Set the data to write to the holding register. Write data is fixed at 2 bytes.

- Content of normal response

  With a normal response, the contents in the response are the same as those in (a) to (g) of the query message.

Example) Write 60 Hz (H1770) to register 40014 (running frequency RAM) in the inverter.

Query message

Transaction identifier		Protocol identifier		Length field		Unit identifier	Function	Register address		Preset data	
*1	*1	H00 (8 bits)	H00 (8 bits)	H00 (8 bits)	H06 (8 bits)	HFF (8 bits)	H06 (8 bits)	H00 (8 bits)	H0D (8 bits)	H17 (8 bits)	H70 (8 bits)

*1 A given value is set.

Normal response (Response message)

The same data as those in the query message

◆Diagnostics (diagnosis of functions) (H08 or 08)

- A communication check can be made since the query message is sent and the query message is returned as it is as the return message (subfunction code H00 function).
  Subfunction code H00 (Return query data)
- Query message

a. Transaction identifier		b. Protocol identifier		c. Length field		d. Unit identifier	e. Function	f. Subfunction		g. Data	
H (8 bits)	L (8 bits)	H (8 bits)	L (8 bits)	H (8 bits)	L (8 bits)	(8 bits)	H08 (8 bits)	H00 (8 bits)	H00 (8 bits)	H (8 bits)	L (8 bits)

- Normal response (Response message)

a. Transaction identifier		b. Protocol identifier		c. Length field		d. Unit identifier	e. Function	f. Subfunction		g. Data	
H (8 bits)	L (8 bits)	H (8 bits)	L (8 bits)	H (8 bits)	L (8 bits)	(8 bits)	H08 (8 bits)	H00 (8 bits)	H00 (8 bits)	H (8 bits)	L (8 bits)

- Query message setting

Message		Description
a	Transaction identifier	The master adds the data for the purpose of transaction control. The same data is returned in the response from the slave.
b	Protocol identifier	Fixed to 0. (When the slave receives data other than 0, it does not send the response message.) 0 is returned in the response from the slave.
c	Length field	The data length from the unit identifier to the data is stored in byte.
d	Unit identifier	Fixed to 255
e	Function	Set H08.
f	Subfunction	Set H0000.
g	Data	Any data 2 bytes long can be set. The setting range is H0000 to HFFFF.

- Content of normal response
  With a normal response, the contents in the response are the same as those in (a) to (g) of the query message.

◆Preset multiple registers (writing data to multiple holding registers) (H10 or 16)

- Data can be written to multiple holding registers.
- Query message

a. Transaction identifier		b. Protocol identifier		c. Length field		d. Unit identifier	e. Function	f. Starting address		g. No. of Points		h. Byte count	i. Data		
H (8 bits)	L (8 bits)	H (8 bits)	L (8 bits)	H (8 bits)	L (8 bits)	(8 bits)	H10 (8 bits)	H (8 bits)	L (8 bits)	H (8 bits)	L (8 bits)	(8 bits)	H (8 bits)	L (8 bits)	... (n × 2 × 8 bits)

- Normal response (Response message)

a. Transaction identifier		b. Protocol identifier		c. Length field		d. Unit identifier	e. Function	f. Starting address		g. No. of Points	
H (8 bits)	L (8 bits)	H (8 bits)	L (8 bits)	H (8 bits)	L (8 bits)	(8 bits)	H10 (8 bits)	H (8 bits)	L (8 bits)	H (8 bits)	L (8 bits)

- Query message setting

Message		Description
a	Transaction identifier	The master adds the data for the purpose of transaction control. The same data is returned in the response from the slave.
b	Protocol identifier	Fixed to 0. (When the slave receives data other than 0, it does not send the response message.) 0 is returned in the response from the slave.
c	Length field	The data length from the unit identifier to the data is stored in byte.
d	Unit identifier	Fixed to 255
e	Function	Set H10.
f	Starting address	Set the holding register address from which to start writing the data. Starting address = start register address (decimal) - 40001 For example, when start register address 0001 is set, the data of holding register address 40002 is read.
g	No. of Points	Set the number of holding registers for writing data. Data can be written to up to 125 registers.
h	Byte count	The setting range is H02 to HFA (2 to 250). Set the value set in (g) multiplied by 2.
i	Data	The amount of data specified by (g) is set. Write data is output Hi bytes first followed by Lo bytes, and is arranged as follows: data of start address, data of start address+1, data of start address+2, and so forth.

- Content of normal response

  With a normal response, the contents in the response are the same as those in (a) to (g) of the query message.

Example) Write 0.5 s (H05) to register 41007 **(Pr.7)** and 1 s (H0A) to register 41008 **(Pr.8)** in the inverter.

Query message

Transaction identifier		Protocol identifier		Length field		Unit identifier	Function	Starting address		No. of points		Byte count	Data			
*1	*1	H00 (8 bits)	H00 (8 bits)	H00 (8 bits)	H0B (8 bits)	HFF (8 bits)	H10 (8 bits)	H03 (8 bits)	HEE (8 bits)	H00 (8 bits)	H02 (8 bits)	H04 (8 bits)	H00 (8 bits)	H05 (8 bits)	H00 (8 bits)	H0A (8 bits)

*1 A given value is set.

Normal response (Response message)

Transaction identifier		Protocol identifier		Length field		Unit identifier	Function	Starting address		No. of points	
*2	*2	H00 (8 bits)	H00 (8 bits)	H00 (8 bits)	H06 (8 bits)	HFF (8 bits)	H10 (8 bits)	H03 (8 bits)	HEE (8 bits)	H00 (8 bits)	H02 (8 bits)

*2 The values are the same as those in the query message.

◆Read holding register access log (H46 or 70)

- Queries by function codes H03 and H10 are supported.
  The number and start address of holding registers successfully accessed by the previous communication are returned.
  "0" is returned for both the number and start address for queries other than the function codes above.
- Query message

a. Transaction identifier		b. Protocol identifier		c. Length field		d. Unit identifier	e. Function
H (8 bits)	L (8 bits)	H (8 bits)	L (8 bits)	H (8 bits)	L (8 bits)	(8 bits)	H46 (8 bits)

- Normal response (Response message)

a. Transaction identifier		b. Protocol identifier		c. Length field		d. Unit identifier	e. Function	f. Starting address		g. No. of points	
H (8 bits)	L (8 bits)	H (8 bits)	L (8 bits)	H (8 bits)	L (8 bits)	(8 bits)	H46 (8 bits)	H (8 bits)	L (8 bits)	H (8 bits)	L (8 bits)

- Query message setting

Message		Description
a	Transaction identifier	The master adds the data for the purpose of transaction control. The same data is returned in the response from the slave.
b	Protocol identifier	Fixed to 0. (When the slave receives data other than 0, it does not send the response message.) 0 is returned in the response from the slave.
c	Length field	The data length from the unit identifier to the data is stored in byte.
d	Unit identifier	Fixed to 255
e	Function	Set H46.

- Content of normal response

Message		Description
f	Starting address	The start address of the holding register that was successfully accessed is returned. Starting address = start register address (decimal) - 40001 For example, when start address 0001 is returned, the holding register address that was successfully accessed is 40002.
g	No. of points	The number of holding registers that were successfully accessed is returned.

Example) Read the successful register start address and the number of successful accesses from the inverter.

Query message

Transaction identifier		Protocol identifier		Length field		Unit identifier	Function
*1	*1	H00 (8 bits)	H00 (8 bits)	H00 (8 bits)	H02 (8 bits)	HFF (8 bits)	H46 (8 bits)

*1 A given value is set.

Normal response (Response message)

Transaction identifier		Protocol identifier		Length field		Unit identifier	Function	Starting address		No. of points	
*2	*2	H00 (8 bits)	H00 (8 bits)	H00 (8 bits)	H06 (8 bits)	HFF (8 bits)	H10 (8 bits)	H03 (8 bits)	HEE (8 bits)	H00 (8 bits)	H02 (8 bits)

*2 The values are the same as those in the query message.

Two successful reads of start address 41007 **(Pr.7)** are returned.

◆Error response

- An error response is returned if the query message received from the master contains an illegal function, address or data. No response is returned for parity, overrun, framing, and busy errors.
- Error response (Response message)

a. Transaction identifier		b. Protocol identifier		c. Length field		d. Unit identifier	e. Function	f. Exception code
H (8 bits)	L (8 bits)	H (8 bits)	L (8 bits)	H (8 bits)	L (8 bits)	(8 bits)	H80 + Function (8 bits)	(8 bits)

Message		Description
a	Transaction identifier	The master adds the data for the purpose of transaction control. The same data is returned in the response from the slave.
b	Protocol identifier	Fixed to 0. (When the slave receives data other than 0, it does not send the response message.) 0 is returned in the response from the slave.
c	Length field	The data length from the unit identifier to the data is stored in byte.
d	Unit identifier	Fixed to 255
e	Function	The function code requested by the master + H80 is set.
f	Exception code	The codes in the following table are set.

- Error code list

Code	Error item	Error description
01	ILLEGAL FUNCTION	The query message from the master has a function code that cannot be handled by the slave.
02	ILLEGAL DATA ADDRESS*1	The query message from the master has a register address that cannot be handled by the slave. (No parameter, parameter cannot be read, parameter cannot be written)
03	ILLEGAL DATA VALUE	The query message from the master has data that cannot be handled by the slave. (Out of parameter write range, a mode is specified, other error)
06	SLAVE DEVICE BUSY	The request message cannot be processed because the slave is executing another operation.

*1 An error response is not returned in the following cases:
・Function code H03 (reading data of holding registers)
When the number of registers is specified as one or more and there are one or more holding registers from which data can be read
・Function code H10 (writing data to multiple holding registers)
When the number of registers is specified as one or more and there are one or more holding registers to which data can be written
In other words, when function code H03 or H10 is used and multiple holding registers are accessed, an error response is not returned even if a nonexistent holding register or holding register that cannot be read or written from/to is accessed.

NOTE

- An error response is returned if none of the accessed holding registers exist. When an accessed holding register does not exist, the read value is 0 and the written data is invalid.

◆MODBUS register

- The following shows the MODBUS registers for system environment variables (read/write), real time monitor items (read), parameters (read/write), fault history data (read/write), and model information monitor items (read).
- System environment variables

Register	Definition	Read/write	Remarks
40002	Inverter reset	Write	Any value
40003	Parameter clear	Write	Set H965A.
40004	All parameter clear	Write	Set H99AA.
40006	Parameter clear*1	Write	Set H5A96.
40007	All parameter clear*1	Write	Set HAA99.
40009	Inverter status / control input command*2	Read/write	Refer to the following.
40010	Operation mode / inverter setting*3	Read/write	Refer to the following.
40014	Running frequency (RAM value)	Read/write	The frequency indication can be changed to the indication in rotations per minute according to the **Pr.37**, **Pr.144**, and **Pr.811***4 settings. (Refer to the Instruction Manual (Detailed) of the FR-A800/FR-F800 inverter.)
40015	Running frequency (EEPROM value)	Write	

*1 Settings in the communication parameters are not cleared.
*2 The data is written as a control input command for writing.
The data is read as the inverter status for reading.
*3 The data is written as an operation mode setting for writing.
The data is read as the operation mode status for reading.
*4 The **Pr.811** setting is available only for the FR-A800-E inverter.

[Inverter status / control input command]

Bit	Definition	
	Control input command	Inverter status
0	Stop command	RUN (Inverter running)*7
1	Forward rotation command	During forward rotation
2	Reverse rotation command	During reverse rotation
3	RH (High-speed command)*5	SU (Up to frequency)*7
4	RM (Middle-speed operation command)*5	OL (Overload)*7
5	RL (Low-speed operation command)*5	IPF (Instantaneous power failure)*7*8
6	JOG (JOG operation)*5	FU (Frequency detection)*7
7	RT (Second function selection)*5	ABC1 (Fault)*7
8	AU (Current input selection)*5	ABC2 (—)*7
9	CS (Automatic restart after instantaneous power failure)*5	Safety monitor output
10	MRS (Output stop)*5*6	0
11	STP (STOP) (Start self-holding)*5	0
12	RES (Inverter reset)*5	0
13	0	0
14	0	0
15	0	Fault occurrence

*5 The signal within parentheses ( ) is the initial status. The input signal function can be changed using **Pr.180 to Pr.189 (Input terminal function selection)**. JOG operation/automatic restart after instantaneous power failure/start self-holding selection/reset cannot be controlled over a network, so in the initial status bit6, bit9, bit11, and bit12 are invalid. To use bit6, bit9, bit11, and bit12, change the signal by **Pr.185**, **Pr.186**, **Pr.188**, or **Pr.189**.
For details of **Pr.180 to Pr.189**, refer to the Instruction Manual (Detailed) of the FR-A800/FR-F800 inverter.
*6 The inverter run enable signal is in the initial status for the separated converter type.
*7 The signal within parentheses ( ) is the initial status. The output signal function can be changed using **Pr.190 to Pr.196 (Output terminal function selection)**.
For details of **Pr.190 to Pr.196**, refer to the Instruction Manual (Detailed) of the FR-A800/FR-F800 inverter.
*8 No function is assigned in the initial status for the separated converter type.

[Operation mode / inverter setting]

Mode	Read value	Write value
EXT	H0000	H0010*9
PU	H0001	H0011*9
EXT JOG	H0002	—
PU JOG	H0003	—
NET	H0004	H0014
PU + EXT	H0005	—

*9 Writing is available depending on the **Pr.79 and Pr.340** settings. For details, refer to the Instruction Manual (Detailed) of the FR-A800/FR-F800 inverter.
The restrictions depending on the operation mode changes according to the computer link specifications.

- Real time monitor

  For the details of the register numbers and the monitor items for the real time monitor, refer to the description of **Pr.52** in the Instruction Manual (Detailed) of the FR-A800/FR-F800 inverter.
- Parameters

Pr.	Register	Parameter name	Read/write	Remarks
0 to 999	41000 to 41999	Refer to the Instruction Manual (Detailed) of the FR-A800/FR-F800 inverter for parameter names.	Read/write	The parameter number +41000 is the register number.
C2 (902)	41902	Terminal 2 frequency setting bias (frequency)	Read/write	
C3 (902)	42092	Terminal 2 frequency setting bias (analog value)	Read/write	Analog value (%) set to **C3 (902)**
	43902	Terminal 2 frequency setting bias (terminal analog value)	Read	Analog value (%) of the voltage (current) applied to terminal 2
125 (903)	41903	Terminal 2 frequency setting gain (frequency)	Read/write	
C4 (903)	42093	Terminal 2 frequency setting gain (analog value)	Read/write	Analog value (%) set to **C4 (903)**
	43903	Terminal 2 frequency setting gain (terminal analog value)	Read	Analog value (%) of the voltage (current) applied to terminal 2
C5 (904)	41904	Terminal 4 frequency setting bias (frequency)	Read/write	
C6 (904)	42094	Terminal 4 frequency setting bias (analog value)	Read/write	Analog value (%) set to **C6 (904)**
	43904	Terminal 4 frequency setting bias (terminal analog value)	Read	Analog value (%) of the current (voltage) applied to terminal 4
126 (905)	41905	Terminal 4 frequency setting gain (frequency)	Read/write	
C7 (905)	42095	Terminal 4 frequency setting gain (analog value)	Read/write	Analog value (%) set to **C7 (905)**
	43905	Terminal 4 frequency setting gain (terminal analog value)	Read	Analog value (%) of the current (voltage) applied to terminal 4
C12 (917)	41917	Terminal 1 bias frequency (speed)	Read/write	
C13 (917)	42107	Terminal 1 bias (speed)	Read/write	Analog value (%) set to **C13 (917)**
	43917	Terminal 1 bias (speed) (terminal analog value)	Read	Analog value (%) of the voltage applied to terminal 1
C14 (918)	41918	Terminal 1 gain frequency (speed)	Read/write	
C15 (918)	42108	Terminal 1 gain (speed)	Read/write	Analog value (%) set to **C15 (918)**
	43918	Terminal 1 gain (speed) (terminal analog value)	Read	Analog value (%) of the voltage applied to terminal 1
C16 (919)	41919	Terminal 1 bias command (torque/ magnetic flux)	Read/write	
C17 (919)	42109	Terminal 1 bias (torque/magnetic flux)	Read/write	Analog value (%) set to **C17 (919)**
	43919	Terminal 1 bias (torque/magnetic flux) (terminal analog value)	Read	Analog value (%) of the voltage applied to terminal 1
C18 (920)	41920	Terminal 1 gain command (torque/ magnetic flux)	Read/write	
C19 (920)	42110	Terminal 1 gain (torque/magnetic flux)	Read/write	Analog value (%) set to **C19 (920)**
	43920	Terminal 1 gain (torque/magnetic flux) (terminal analog value)	Read	Analog value (%) of the voltage applied to terminal 1
C29 (925)	42115	Motor temperature detection calibration (analog input)	Read/write	
	43925	Motor temperature detection calibration (analog input) (terminal analog value)	Read	Analog value (%) between terminals TH1 and TH2 of the FR-A8AZ
C30 (926)	41926	Terminal 6 bias frequency (speed)	Read/write	
C31 (926)	42116	Terminal 6 bias (speed)	Read/write	Analog value (%) set to **C31 (926)**
	43926	Terminal 6 bias (speed) (terminal analog value)	Read	Analog value (%) of the voltage applied to terminal 6 of the FR-A8AZ
C32 (927)	41927	Terminal 6 gain frequency (speed)	Read/write	
C33 (927)	42117	Terminal 6 gain (speed)	Read/write	Analog value (%) set to **C33 (927)**
	43927	Terminal 6 gain (speed) (terminal analog value)	Read	Analog value (%) of the voltage applied to terminal 6 of the FR-A8AZ
C34 (928)	41928	Terminal 6 bias command (torque)	Read/write	

(N) Operation via communication and its settings

Pr.	Register	Parameter name	Read/write	Remarks
C35 (928)	42118	Terminal 6 bias (torque)	Read/write	Analog value (%) set to **C35 (928)**
	43928	Terminal 6 bias (torque) (terminal analog value)	Read	Analog value (%) of the voltage applied to terminal 6 of the FR-A8AZ
C36 (929)	41929	Terminal 6 gain command (torque)	Read/write	
C37 (929)	42119	Terminal 6 gain (torque)	Read/write	Analog value (%) set to **C37 (929)**
	43929	Terminal 6 gain (torque) (terminal analog value)	Read	Analog value (%) of the voltage applied to terminal 6 of the FR-A8AZ
C8 (930)	41930	Current output bias signal	Read/write	
C9 (930)	42120	Current output bias current	Read/write	Analog value (%) set to **C9 (930)**
C10 (931)	41931	Current output gain signal	Read/write	
C11 (931)	42121	Current output gain current	Read/write	Analog value (%) set to **C11 (931)**
C38 (932)	41932	Terminal 4 bias command (torque/ magnetic flux)	Read/write	
C39 (932)	42122	Terminal 4 bias (torque/magnetic flux)	Read/write	Analog value (%) set to **C39 (932)**
	43932	Terminal 4 bias (torque/magnetic flux) (terminal analog value)	Read	Analog value (%) of the current (voltage) applied to terminal 4
C40 (933)	41933	Terminal 4 gain command (torque/ magnetic flux)	Read/write	
C41 (933)	42123	Terminal 4 gain (torque/magnetic flux)	Read/write	Analog value (%) set to **C41 (933)**
	43933	Terminal 4 gain (torque/magnetic flux) (terminal analog value)	Read	Analog value (%) of the current (voltage) applied to terminal 4
C42 (934)	41934	PID display bias coefficient	Read/write	
C43 (934)	42124	PID display bias analog value	Read/write	Analog value (%) set to **C43 (934)**
	43934	PID display bias analog value (terminal analog value)	Read	Analog value (%) of the current (voltage) applied to terminal 4
C44 (935)	41935	PID display gain coefficient	Read/write	
C45 (935)	42125	PID display gain analog value	Read/write	Analog value (%) set to **C45 (935)**
	43935	PID display gain analog value (terminal analog value)	Read	Analog value (%) of the current (voltage) applied to terminal 4
1000 to 1999	45000 to 45359	Refer to the Instruction Manual (Detailed) of the FR-A800/FR-F800 inverter for parameter names.	Read/write	The parameter number + 44000 is the register number.

- Fault history

Register	Definition	Read/write	Remarks
40501	Fault history 1	Read/write	Being 2 bytes in length, the data is stored as H00○○. Refer to the lowest 1 byte for the error code. (Refer to the list of fault displays in the Instruction Manual (Detailed) of the FR-A800 inverter for error codes.) Performing write using the register 40501 batch-clears the fault history. Set any value as data.
40502	Fault history 2	Read	
40503	Fault history 3	Read	
40504	Fault history 4	Read	
40505	Fault history 5	Read	
40506	Fault history 6	Read	
40507	Fault history 7	Read	
40508	Fault history 8	Read	

- Model information monitor

Register	Definition	Read/write	Remarks
44001	Inverter type (1st and 2nd characters)	Read	The inverter type can be read in ASCII code. H20 (blank code) is set for blank area. Example) For the "FR-A840-E1 (FM type)", H46, H52, H2D, H41, H38, H34, H30, H2D, H45, H31, H20...H20
44002	Inverter type (3rd and 4th characters)	Read	
44003	Inverter type (5th and 6th characters)	Read	
44004	Inverter type (7th and 8th characters)	Read	
44005	Inverter type (9th and 10th characters)	Read	
44006	Inverter type (11th and 12th characters)	Read	
44007	Inverter type (13th and 14th characters)	Read	
44008	Inverter type (15th and 16th characters)	Read	
44009	Inverter type (17th and 18th characters)	Read	
44010	Inverter type (19th and 20th characters)	Read	
44011	Capacity (1st and 2nd characters)	Read	The capacity in the inverter model can be read in ASCII code. Data is read in increments of 0.1 kW, and rounds down to 0.01 kW increments. H20 (blank code) is set for blank area. Example) 0.75K..." 7" (H20, H20, H20, H20, H20, H37)
44012	Capacity (3rd and 4th characters)	Read	
44013	Capacity (5th and 6th characters)	Read	

NOTE

- When a 32-bit parameter setting or monitor item is read and the value to be read exceeds HFFFF, HFFFF is returned.

2.5.7 BACnet/IP

Using BACnet/IP protocol, communication operation and parameter setting are available via the Ethernet connector on the inverter.
(Only FR-F800-E inverters support BACnet/IP.)

Pr.	Name	Initial value		Setting range	Description
		FM	CA		
390 **N054**	**% setting reference frequency**	60 Hz	50 Hz	1 to 590 Hz	Set a reference frequency of the set frequency.
728 **N052**	**Device instance number (Upper 3 digits)**	0		0 to 419 (0 to 418)	Device identifier When the figure obtained by combining the **Pr.728** and **Pr.729** settings is not within "0 to 4194302", the setting is out of range. (When **Pr.728** = "419", the setting range of **Pr.729** is "0 to 4302". When **Pr.729** = "4303" or more, the setting range of **Pr.728** is "0 to 418".)
729 **N053**	**Device instance number (Lower 4 digits)**	0		0 to 9999 (0 to 4302)	

◆Communication specifications

- The specifications conform to the BACnet standard of the Ethernet physical medium.

Item	Description
Physical medium	Ethernet (ISO 8802-3)
Supported property of BACnet standard object type	Refer to page 75.
Supported BIBBs (Annex K)	Refer to page 83.
BACnet standardized device profile (Annex L)	Refer to page 83.
Segmentation	Not supported
Device address binding	Not supported

NOTE

- This product is classified as a BACnet Application Specific Controller (B-ASC).

◆Initial setting

- To select the BACnet/IP for the application, set "47808" in any of **Pr.1427 to Pr.1429 Ethernet function selection 1 to 3**. (Refer to page 22.)
- To limit the network devices that send the command through the Ethernet network (BACnet/IP), set the range of IP addresses (**Pr.1449 to Pr.1454**). (When BACnet/IP is used, do not include IP addresses of other inverters in the Ethernet IP address range set for command source selection.) (Refer to page 25.)
- Use **Pr.1432 Ethernet communication check time interval** to set the interval of the check time (for signal loss detection) for all devices with IP addresses in the range specified for Ethernet command source selection (**Pr.1449 to Pr.1454**). (Refer to page 26.)

◆Parameters for monitoring (Pr.52, Pr.54, Pr.158, Pr.774 to Pr.776, Pr.992, and Pr.1027 to Pr.1034)

- The following items related to BACnet/IP can be monitored.

Parameter setting for monitor item	Description
83*1	BACnet valid APDU counter (The count of valid APDU detection is displayed.)*2
85*3	Terminal FM/CA output level (Same item as Analog Output 0 of the BACnet object)
86*4	Terminal AM output level (Same item as Analog Output 1 of the BACnet object)

*1 The setting is available in any of **Pr.52, Pr.774 to Pr.776, Pr.992,** and **Pr.1027 to Pr.1034**.
*2 When the count exceeds "9999", the monitor value is reset to "0".
*3 The setting is available only in **Pr.54** (terminal FM/CA).
*4 The setting is available only in **Pr.158** (terminal AM).

NOTE

- When "81, 82, or 84" is set in any of the parameters for monitoring while BACnet/IP is selected, the monitor value is fixed to "0".
- For the description of other settings, refer to the FR-F800 Instruction Manual (Detailed).

◆% setting reference frequency (Pr.390)

- Set a reference frequency of the set frequency. The setting value of **Pr.390 % setting reference frequency** is 100% reference. The ratio of the frequency command is converted to the set frequency in the following formula.
  Set frequency = **% setting reference frequency** × Speed scale (Refer to page 77.)

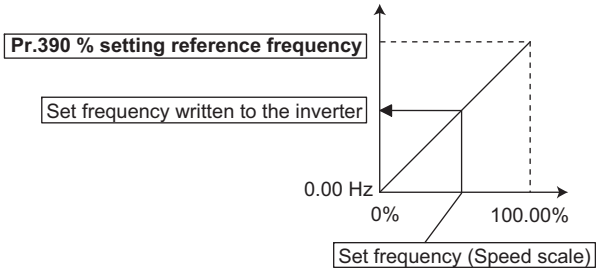

NOTE

- The % setting reference frequency cannot be set at less than the minimum frequency resolution of the inverter.
- The set frequency is written to RAM.
- The set frequency is applied at the writing of Speed scale. (The set frequency is not applied at the setting of **Pr.390**.)

◆Supported property of BACnet standard object type

R: Read only, W: Read/Write (Commandable values not supported), C: Read/Write (Commandable values supported)

Property	Object support condition						
	Analog Input	Analog Output	Analog Value	Binary Input	Binary Output	Binary Value	Device
APDU Timeout							R
Application Software Version							R
Database Revision							R
Device Address Binding							R
Event State	R	R	R	R	R	R	
Firmware Revision							R
Max APDU Length Accepted							R
Max Info Frames							W
Max Master							W
Model Name							R
Number of APDU Retries							R
Object Identifier	R	R	R	R	R	R	R
Object List							R
Object Name	R	R	R	R	R	R	R
Object Type	R	R	R	R	R	R	R
Out Of Service	R	R	R	R	R	R	
Polarity				R	R		
Present Value	R	C	C*1	R	C	C*1	
Priority Array		R	R*2		R	R*2	
Protocol Object Types Supported							R
Protocol Revision							R
Protocol Services Supported							R
Protocol Version							R
Relinquish Default		R	R*2		R	R*2	
Segmentation Supported							R
Status Flags	R	R	R	R	R	R	
System Status							R
Unit	R	R	R				
Vendor Identifier							R
Vendor Name							R

*1 This property is commandable for some instances of this object. Otherwise it is read/write.
*2 This property is supported only for instances of this object where the Present Value property is commandable.

◆Supported BACnet object

• ANALOG INPUT

Object identifier	Object name	Present value access type*1	Description	Unit
0	Terminal 1	R	Represents actual input voltage of terminal 1. (The range varies depending on the **Pr.73** and **Pr.267** settings. -10 to +10 V (-100% to +100%), -5 to +5 V (-100% to +100%))	percent (98)
1	Terminal 2	R	Represents actual input voltage (or input current) of terminal 2. (The range varies depending on the **Pr.73** and **Pr.267** settings. 0 to 10 V (0% to 100%), 0 to 5 V (0% to 100%), 0 to 20 mA (0% to 100%))	percent (98)
2	Terminal 4	R	Represents actual input voltage (or input current) of terminal 4. (The range varies depending on the **Pr.73** and **Pr.267** settings. 2 to 10 V (0% to 100%), 1 to 5 V (0% to 100%), 4 to 20 mA (0% to 100%))	percent (98)

*1 R: Read only, W: Read/Write (Commandable values not supported), C: Read/Write (Commandable values supported)

• ANALOG OUTPUT

Object identifier	Object name	Present value access type*1	Description	Unit
0	Terminal FM (CA)	C	Controls actual output current level of terminal FM/CA. Control is available when **Pr.54 FM/CA terminal function selection**="85"*2. (Setting range: 0 to 200%)	percent (98)
1	Terminal AM	C	Controls actual output voltage level of terminal AM. Control is available when **Pr.158 AM terminal function selection**="86"*2. (Setting range: -200 to 200%)	percent (98)

*1 R: Read only, W: Read/Write (Commandable values not supported), C: Read/Write (Commandable values supported)
Values written to the objects that support the commandable values are stored in the Priority Array, even when "Write Access Denied" is returned due to inconsistency of the writing requirements such as the operating mode, on condition that the values are written within the setting range.

*2 Available regardless of the operation mode, operation command source, and speed command source.

• ANALOG VALUE

Object identifier	Object name	Present value access type*1	Description	Unit
1	Output frequency	R	Represents the output frequency monitor.	hertz (27)
2	Output current	R	Represents the output current monitor.	amperes (3)
3	Output voltage	R	Represents the output voltage monitor.	volts (5)
6	Running speed	R	Represents the running speed monitor.	revolution-per-minute (104)
8	Converter output voltage	R	Represents the converter output voltage monitor.	volts (5)
14	Output power	R	Represents the output power monitor.	kilowatts (48)
17	Load meter	R	Represents the load meter monitor.	percent (98)
20	Cumulative energization time	R	Represents the cumulative energization time monitor.	hours (71)
23	Actual operation time	R	Represents the actual operation time monitor.	hours (71)

Object identifier	Object name	Present value access type*1	Description	Unit
25	Cumulative power	R	Represents the cumulative power monitor.	kilowatt-hours (19)
52	PID set point	R	Represents the PID set point monitor.	no-units (95)
54	PID deviation	R	Represents the PID deviation monitor. (Minus display is available with reference to 0%, in 0.1% increment.)	no-units (95)
67	PID measured value 2	R	Represents the PID measured value 2 monitor.	no-units (95)
92	Second PID set point	R	Represents the second PID set point monitor.	no-units (95)
94	Second PID deviation	R	Represents the second PID deviation monitor. (Minus display is available with reference to 0%, in 0.1% increment.)	no-units (95)
95	Second PID measured value 2	R	Represents the second PID measured value 2 monitor.	no-units (95)
200	Alarm history 1	R	Represents the fault history 1 (the latest fault) monitor.	no-units (95)
201	Alarm history 2	R	Represents the fault history 2 (second fault in past) monitor.	no-units (95)
202	Alarm history 3	R	Represents the fault history 3 (third fault in past) monitor.	no-units (95)
203	Alarm history 4	R	Represents the fault history 4 (fourth fault in past) monitor.	no-units (95)
300	Speed scale *2	C	Controls the ratio of the frequency command. (Setting range: 0.00 to 100.00) (Refer to page 74.)	percent (98)
310	PID set point CMD *2	C	Set the PID action set point. This object is the set point during PID operation if **Pr.128** = "60 or 61". (Setting range: 0.00 to 100.00)*3	no-units (95)
311	PID measured value CMD *2	C	Set the PID measured value. This object is the measured value during PID operation if **Pr.128** = "60 or 61". (Setting range: 0.00 to 100.00)*3	no-units (95)
312	PID deviation CMD *2	C	Set the PID deviation. (0.01 increment) This object is the deviation during PID operation if **Pr.128** = "50 or 51". (Setting range: -100.00 to 100.00)	percent (98)
320	Second PID set point CMD	C	Set the second PID action set point. This object is the set point during PID operation if **Pr.753** = "60 or 61". (Setting range: 0.00 to 100.00)*3	no-units (95)
321	Second PID measured value CMD	C	Set the second PID measured value. This object is the measured value during PID operation if **Pr.753** = "60 or 61". (Setting range: 0.00 to 100.00)*3	no-units (95)
322	Second PID deviation CMD	C	Set the second PID deviation. (0.01 increment) This object is the deviation during PID operation if **Pr.753** = "50 or 51". (Setting range: -100.00 to 100.00)	percent (98)
398	Mailbox parameter	W	Access to the properties which are not defined as objects are available. (Refer to page 80.)	no-units (95)
399	Mailbox value	W		no-units (95)
10007	Acceleration time	W	Set **Pr.7 Acceleration time**.	seconds (73)
10008	Deceleration time	W	Set **Pr.8 Deceleration time**.	seconds (73)

*1 R: Read only, W: Read/Write (Commandable values not supported), C: Read/Write (Commandable values supported)
Values written to the objects that support the commandable values are stored in the Priority Array, even when "Write Access Denied" is returned due to inconsistency of the writing requirements such as the operating mode, on condition that the values are written within the setting range.

*2 If communication speed command source is other than NET, the setting value can be written, but not to be applied.

*3 When both **C42 (Pr.1136) and C44 (Pr.1138)** ≠ "9999", the setting range is from the smaller coefficient to the larger coefficient of **C42 (Pr.1136) and C44 (Pr.1138)**. Depending on the setting, the writing value and the reading value may not be the same at the minimum digit.

(N) Operation via communication and its settings

• BINARY INPUT

Object identifier	Object name	Present value access type*1	Description (0: Inactive, 1: Active)
0	Terminal STF	R	Represents actual input of terminal STF.
1	Terminal STR	R	Represents actual input of terminal STR.
2	Terminal AU	R	Represents actual input of terminal AU.
3	Terminal RT	R	Represents actual input of terminal RT.
4	Terminal RL	R	Represents actual input of terminal RL.
5	Terminal RM	R	Represents actual input of terminal RM.
6	Terminal RH	R	Represents actual input of terminal RH.
7	Terminal JOG	R	Represents actual input of terminal JOG.
8	Terminal MRS	R	Represents actual input of terminal MRS.
9	Terminal STOP	R	Represents actual input of terminal STOP.
10	Terminal RES	R	Represents actual input of terminal RES.
11	Terminal CS	R	Represents actual input of terminal CS.
100	Terminal RUN	R	Represents actual output of terminal RUN.
101	Terminal SU	R	Represents actual output of terminal SU.
102	Terminal IPF	R	Represents actual output of terminal IPF.
103	Terminal OL	R	Represents actual output of terminal OL.
104	Terminal FU	R	Represents actual output of terminal FU.
105	Terminal ABC1	R	Represents actual output of terminal ABC1.
106	Terminal ABC2	R	Represents actual output of terminal ABC2.
107	Terminal SO	R	Represents actual output of terminal SO.

*1 R: Read only, W: Read/Write (Commandable values not supported), C: Read/Write (Commandable values supported)

• BINARY OUTPUT

Object identifier	Object name	Present value access type*1	Description (0: Inactive, 1: Active)
0	Terminal RUN CMD	C	Represents actual output of terminal RUN. Available when **Pr.190 RUN terminal function selection** = "82 or 182".*2
1	Terminal SU CMD	C	Controls actual output of terminal SU. Available when **Pr.191 SU terminal function selection** = "82 or 182".*2
2	Terminal IPF CMD	C	Controls actual output of terminal IPF. Available when **Pr.192 IPF terminal function selection** = "82 or 182".*2
3	Terminal OL CMD	C	Controls actual output of terminal OL. Available when **Pr.193 OL terminal function selection** = "82 or 182".*2
4	Terminal FU CMD	C	Controls actual output of terminal FU. Available when **Pr.194 FU terminal function selection** = "82 or 182".*2
5	Terminal ABC1 CMD	C	Controls actual output of terminal ABC1. Available when **Pr.195 ABC1 terminal function selection** = "82 or 182".*2
6	Terminal ABC2 CMD	C	Controls actual output of terminal ABC2. Available when **Pr.196 ABC2 terminal function selection** = "82 or 182".*2

*1 R: Read only, W: Read/Write (Commandable values not supported), C: Read/Write (Commandable values supported)
Values written to the objects that support the commandable values are stored in the Priority Array, even when "Write Access Denied" is returned due to inconsistency of the writing requirements such as the operating mode, on condition that the values are written within the setting range.

*2 Available regardless of the operation mode, operation command source, and speed command source.

• BINARY VALUE

Object identifier	Object name	Present value access type*1	Description
0	Inverter running	R	Represents inverter running (RUN) signal status.
11	Inverter operation ready	R	Represents inverter operation ready (RY) signal status.
98	Alarm output	R	Represents alarm output (LF) signal status.
99	Fault output	R	Represents fault output (ALM) signal status.
200	Inverter running reverse	R	Represents inverter reverse running status.
300	Control input instruction AU	C	Controls the function assigned to terminal AU. Setting 1 in this object turns ON the signal assigned to **Pr.184 AU terminal function selection**.
301	Control input instruction RT	C	Controls the function assigned to terminal RT. Setting 1 in this object turns ON the signal assigned to **Pr.183 RT terminal function selection**.
302	Control input instruction RL	C	Controls the function assigned to terminal RL. Setting 1 in this object turns ON the signal assigned to **Pr.180 RL terminal function selection**.
303	Control input instruction RM	C	Controls the function assigned to terminal RM. Setting 1 in this object turns ON the signal assigned to **Pr.181 RM terminal function selection**.
304	Control input instruction RH	C	Controls the function assigned to terminal RH. Setting 1 in this object turns ON the signal assigned to **Pr.182 RH terminal function selection**.
305	Control input instruction JOG *2	C	Controls the function assigned to terminal JOG. Setting 1 in this object turns ON the signal assigned to **Pr.185 JOG terminal function selection**.
306	Control input instruction MRS	C	Controls the function assigned to terminal MRS. Setting 1 in this object turns ON the signal assigned to **Pr.187 MRS terminal function selection**.
307	Control input instruction STOP *2	C	Controls the function assigned to terminal STOP. Setting 1 in this object turns ON the signal assigned to **Pr.188 STOP terminal function selection**.
308	Control input instruction RES *2	C	Controls the function assigned to terminal RES. Setting 1 in this object turns ON the signal assigned to **Pr.189 RES terminal function selection**.
309	Control input instruction CS *2	C	Controls the function assigned to terminal CS. Setting 1 in this object turns ON the signal assigned to **Pr.186 CS terminal function selection**.
400	Run/Stop	C	Controls the start/stop command. The start command is written after the Speed scale is applied. *3 1: Start 0: Stop
401	Forward/Reverse	C	Controls the forward/reverse rotation. *3 1: Reverse rotation 0: Forward rotation
402	Fault reset	C	Clears fault output status. (Release of an inverter fault without inverter reset is available.)

*1 R: Read only, W: Read/Write (Commandable values not supported), C: Read/Write (Commandable values supported)
Values written to the objects that support the commandable values are stored in the Priority Array, even when "Write Access Denied" is returned due to inconsistency of the writing requirements such as the operating mode, on condition that the values are written within the setting range.

*2 The following signals cannot be controlled by the network: JOG operation, selection of automatic restart after instantaneous power failure, start self-holding, and reset. Therefore control input instruction JOG, STOP, RES, and CS are invalid in the initial status. To use the control input instruction JOG, STOP, RES, and CS, change the signals with **Pr.185, Pr.186, Pr.188, and Pr.189 (Input terminal function selection)**. (Reset is available with ReinitializeDevice.)

*3 If communication operation command source is other than NET, the setting value can be written, but not to be applied.

◆Mailbox parameter / Mailbox value (BACnet registers)

- Access to the properties which are not defined as objects are available by using "Mailbox parameter" and "Mailbox value".
- To read a property, write the register of the intended property to "Mailbox parameter", and then read "Mailbox value". To write a property, write the register of the intended property to "Mailbox parameter", and then write a value to "Mailbox value".
- System environment variables

Register	Definition	Read/ write	Remarks
40010	Operation mode / inverter setting	Read/write	For write, set data as the operation mode setting. For read, data is read as the operation mode status.

<Operation mode / inverter setting>

Mode	Read value	Write value
EXT	H0000	H0010 *1
PU	H0001	H0011 *1
EXT JOG	H0002	—
PU JOG	H0003	—
NET	H0004	H0014
PU + EXT	H0005	—

*1 Writing is available depending on the **Pr.79** and **Pr.340** settings. For the details, refer to the Instruction Manual (Detailed) of the FR-F800 inverter.
Restrictions in each operation mode conform with the computer link specification.

- Real time monitor
  The register numbers and the monitor items are the same as those of the MODBUS RTU real time monitor. Refer to the MODBUS RTU real time monitor on the Instruction Manual (Detailed) of the FR-F800 inverter.
- Parameter

Pr.	Register	Parameter name	Read/ write	Remarks
0 to 999	41000 to 41999	—	Read/write	The parameter number + 41000 is the register number.
C2 (902)	41902	Terminal 2 frequency setting bias (frequency)	Read/write	
C3 (902)	42092	Terminal 2 frequency setting bias (analog value)	Read/write	Analog value (%) set to **C3 (902)**
	43902	Terminal 2 frequency setting bias (terminal analog value)	Read	Analog value (%) of the voltage (current) applied to the terminal 2
125 (903)	41903	Terminal 2 frequency setting gain (frequency)	Read/write	
C4 (903)	42093	Terminal 2 frequency setting gain (analog value)	Read/write	Analog value (%) set to **C4 (903)**
	43903	Terminal 2 frequency setting gain (terminal analog value)	Read	Analog value (%) of the voltage (current) applied to the terminal 2
C5 (904)	41904	Terminal 4 frequency setting bias (frequency)	Read/write	
C6 (904)	42094	Terminal 4 frequency setting bias (analog value)	Read/write	Analog value (%) set to **C6 (904)**
	43904	Terminal 4 frequency setting bias (terminal analog value)	Read	Analog value (%) of the current (voltage) applied to the terminal 4
126 (905)	41905	Terminal 4 frequency setting gain (frequency)	Read/write	
C7 (905)	42095	Terminal 4 frequency setting gain (analog value)	Read/write	Analog value (%) set to **C7 (905)**
	43905	Terminal 4 frequency setting gain (terminal analog value)	Read	Analog value (%) of the current (voltage) applied to the terminal 4
C12 (917)	41917	Terminal 1 bias frequency (speed)	Read/write	
C13 (917)	42107	Terminal 1 bias (speed)	Read/write	Analog value (%) set to **C13 (917)**
	43917	Terminal 1 bias (speed) (terminal analog value)	Read	Analog value (%) of the voltage applied to the terminal 1

Pr.	Register	Parameter name	Read/ write	Remarks
C14 (918)	41918	Terminal 1 gain frequency (speed)	Read/write	
C15 (918)	42108	Terminal 1 gain (speed)	Read/write	Analog value (%) set to **C15 (918)**
	43918	Terminal 1 gain (speed) (terminal analog value)	Read	Analog value (%) of the voltage applied to the terminal 1
C16 (919)	41919	Terminal 1 bias command (torque)	Read/write	
C17 (919)	42109	Terminal 1 bias (torque)	Read/write	Analog value (%) set to **C17 (919)**
	43919	Terminal 1 bias (torque) (terminal analog value)	Read	Analog value (%) of the voltage applied to the terminal 1
C18 (920)	41920	Terminal 1 gain command (torque)	Read/write	
C19 (920)	42110	Terminal 1 gain (torque)	Read/write	Analog value (%) set to **C19 (920)**
	43920	Terminal 1 gain (torque) (terminal analog value)	Read	Analog value (%) of the voltage applied to the terminal 1
C8 (930)	41930	Current output bias signal	Read/write	
C9 (930)	42120	Current output bias current	Read/write	Analog value (%) set to **C9 (930)**
C10 (931)	41931	Current output gain signal	Read/write	
C11 (931)	42121	Current output gain current	Read/write	Analog value (%) set to **C11 (931)**
C38 (932)	41932	Terminal 4 bias command (torque)	Read/write	
C39 (932)	42122	Terminal 4 bias (torque)	Read/write	Analog value (%) set to **C39 (932)**
	43932	Terminal 4 bias (torque) (terminal analog value)	Read	Analog value (%) of the current (voltage) applied to the terminal 4
C40 (933)	41933	Terminal 4 gain command (torque)	Read/write	
C41 (933)	42123	Terminal 4 gain (torque)	Read/write	Analog value (%) set to **C41 (933)**
	43933	Terminal 4 gain (torque) (terminal analog value)	Read	Analog value (%) of the current (voltage) applied to the terminal 4
C42 (934)	41934	PID display bias coefficient	Read/write	
C43 (934)	42124	PID display bias analog value	Read/write	Analog value (%) set to **C43 (934)**
	43934	PID display bias analog value (terminal analog value)	Read	Analog value (%) of the current (voltage) applied to the terminal 4
C44 (935)	41935	PID display gain coefficient	Read/write	
C45 (935)	42125	PID display gain analog value	Read/write	Analog value (%) set to **C45 (935)**
	43935	PID display gain analog value (terminal analog value)	Read	Analog value (%) of the current (voltage) applied to the terminal 4
1000 to 1999	45000 to 45999	—	Read/write	The parameter number + 44000 is the register number.

(N) Operation via communication and its settings

- Fault history

Register	Definition	Read/write	Remarks
40501	Fault history 1	Read/write	Being 2 bytes in length, the data is stored as "H00○○". Refer to the lowest 1 byte for the error code. Performing write using the register 40501 batch-clears the fault history. Set any value as data.
40502	Fault history 2	Read	
40503	Fault history 3	Read	
40504	Fault history 4	Read	
40505	Fault history 5	Read	
40506	Fault history 6	Read	
40507	Fault history 7	Read	
40508	Fault history 8	Read	

- Product profile

Register	Definition	Read/write	Remarks
44001	Inverter type (1st and 2nd characters)	Read	Reading inverter type in ASCII code. "H20" (blank code) is set for blank area. Example) For the "FR-F840-E1 (FM type)", H46, H52, H2D, H46, H38, H34, H30, H2D, H45, H31, H20...H20
44002	Inverter type (3rd and 4th characters)	Read	
44003	Inverter type (5th and 6th characters)	Read	
44004	Inverter type (7th and 8th characters)	Read	
44005	Inverter type (9th and 10th characters)	Read	
44006	Inverter type (11th and 12th characters)	Read	
44007	Inverter type (13th and 14th characters)	Read	
44008	Inverter type (15th and 16th characters)	Read	
44009	Inverter type (17th and 18th characters)	Read	
44010	Inverter type (19th and 20th characters)	Read	
44011	Capacity (1st and 2nd characters)	Read	Reading inverter capacity in ASCII code. Data is read in increments of 0.1 kW, and rounds down to 0.01 kW increments. "H20" (blank code) is set for blank area. Example) 0.75K..." 7" (H20, H20, H20, H20, H20, H37)
44012	Capacity (3rd and 4th characters)	Read	
44013	Capacity (5th and 6th characters)	Read	

NOTE

- When a 32-bit parameter setting or monitor item is read and the value to be read exceeds HFFFF, HFFFF is returned.

◆ANNEX A - PROTOCOL IMPLEMENTATION CONFORMANCE STATEMENT (NORMATIVE)

(This annex is part of this Standard and is required for its use.)

BACnet Protocol Implementation Conformance Statement

Date: 4th April 2017
Vendor Name: Mitsubishi Electric Corporation
Product Name: Inverter
Product Model Number: FR-F820-E1, FR-F820-E2, FR-F840-E1, FR-F840-E2, FR-F842-E1, FR-F842-E2, FR-F846-E1, FR-F846-E2
Application Software Version: 8463K
Firmware Revision: 1.00
BACnet Protocol Revision: 4

Product Description:

_____
_____
_____

BACnet Standardized Device Profile (Annex L):

☐ BACnet Operator Workstation (B-OWS)
☐ BACnet Building Controller (B-BC)
☐ BACnet Advanced Application Controller (B-AAC)
☒ BACnet Application Specific Controller (B-ASC)
☐ BACnet Smart Sensor (B-SS)
☐ BACnet Smart Actuator (B-SA)

List all BACnet Interoperability Building Blocks Supported (Annex K):

DS-RP-B, DS-WP-B, DM-DDB-B, DM-DOB-B, DM-DCC-B , DM-RD-B

Segmentation Capability:

☐ Segmented requests supported Window Size _____
☐ Segmented responses supported Window Size _____

(N) Operation via communication and its settings

Standard Object Types Supported:

An object type is supported if it may be present in the device. For each standard Object Type supported provide the following data:

1) Whether objects of this type are dynamically creatable using the CreateObject service
2) Whether objects of this type are dynamically deletable using the DeleteObject service
3) List of the optional properties supported
4) List of all properties that are writable where not otherwise required by this standard
5) List of all properties that are conditionally writable where not otherwise required by this standard
6) List of proprietary properties and for each its property identifier, datatype, and meaning
7) List of any property range restrictions

Dynamic object creation and deletion is not supported.

To check the object types supported by the FR-F800-E, refer to page 76.

Data Link Layer Options:

☒ BACnet/IP, (Annex J)
☐ BACnet/IP, (Annex J), Foreign Device
☐ ISO 8802-3, Ethernet (Clause 7)
☐ ANSI/ATA 878.1, 2.5 Mb. ARCNET (Clause 8)
☐ ANSI/ATA 878.1, RS-485 ARCNET (Clause 8), baud rate(s)_____
☐ MS/TP master (Clause 9), baud rate(s): _____
☐ MS/TP slave (Clause 9), baud rate(s): _____
☐ Point-To-Point, EIA 232 (Clause 10), baud rate(s):_____
☐ Point-To-Point, modem, (Clause 10), baud rate(s): _____
☐ LonTalk, (Clause 11), medium: _____
☐ Other: _____

Device Address Binding:

Is static device binding supported? (This is currently necessary for two-way communication with MS/TP slaves and certain other devices.) ☐ Yes ☒ No

Networking Options:

☐ Router, Clause 6 - List all routing configurations, e.g., ARCNET-Ethernet, Ethernet-MS/TP, etc.
☐ Annex H, BACnet Tunneling Router over IP
☐ BACnet/IP Broadcast Management Device (BBMD)
Does the BBMD support registrations by Foreign Devices? ☐ Yes ☐ No

Character Sets Supported:

Indicating support for multiple character sets does not imply that they can all be supported simultaneously.

☒ ANSI X3.4 ☐ IBM™/Microsoft™ DBCS ☐ ISO 8859-1
☐ ISO 10646 (UCS-2) ☐ ISO 10646 (UCS-4) ☐ JIS C 6226

If this product is a communication gateway, describe the types of non-BACnet equipment/ networks(s) that the gateway supports:

_____
_____
_____

2.6 Inverter-to-inverter link function

The inverter-to-inverter link function enables communication between multiple inverters connected by Ethernet in a small-scale system by using the I/O devices and special registers of the PLC function.
The inverter-to-inverter link function is enabled by simply setting **Pr.1124 Station number in inverter-to-inverter link** and **Pr.1125 Number of inverters in inverter-to-inverter link system**.

Pr.	Name	Initial value	Setting range	Description
1124 N681∗1	**Station number in inverter-to-inverter link**	9999	0 to 5	Set the station number for the inverter-to-inverter link function.
			9999	Inverter-to-inverter link function disabled
1125 N682∗1	**Number of inverters in inverter-to-inverter link system**	2	2 to 6	Set the total number of inverters used for the inverter-to-inverter link function.

∗1 The setting is applied after an inverter reset or power-ON.

◆Communication specifications

Item		Description
Transmission speed		100 Mbps (Do not use the function at 10 Mbps.)
Connectable units		Master: 1 Slave: up to 5
Topology		Star
Maximum number of links per station	Output device	16 (2 bytes)
	Special register	8 (16 bytes)

◆Setting procedure

1 **Set a value other than "0" in Pr.414 PLC function operation selection to enable the PLC function.**

2 **To set the inverter as the master, set "0" in Pr.1124 Station number in inverter-to-inverter link, and to set the inverter as a slave, select a station number from 1 to 5 and set the number in Pr.1124.**

3 **Set the total number of inverters used for the inverter-to-inverter link function in Pr.1125 Number of inverters in inverter-to-inverter link system. For example, set "3" in Pr.1125 when two slave inverters and the master inverter are used.**

4 **Use FR Configurator2 to write sequence programs to the master inverter.**

NOTE

- Use different station numbers for different devices. (If different devices have the same station number, the communication cannot be performed properly.
- Set consecutive numbers for the station numbers. (Do not skip any numbers like 1, 2, then 4.)
- When **Pr.1124** is set to a value equal to or larger than the value set in **Pr.1125**, normal communication is not available.
- Use the Inverter-to-inverter linkup (LNK) signal to check that the master-slave communication is established. (For the details of the LNK signal, refer to page 13.)
- To detect the interruption of the inverter-to-inverter link communication and activate the protective function, set **Pr.997 Fault initiation** in advance, and create and execute a sequence program to activate the protective function by the input of the signal loss detection signal from the external sensor.
- For the details of the PLC function, refer to the PLC Function Programming Manual and the Instruction Manual of FR Configurator2.
- For the details of FR Configurator2, refer to the Instruction Manual of FR Configurator2.

◆System configuration

The following shows the system configuration for using the inverter-to-inverter link function. The master inverter can communicate with the slave inverters through one or two hubs (refer to the description of **Pr.1124** for the master/slave setting).

(Communication using the inverter-to-inverter function is not available for the inverters directly connected to the router.)

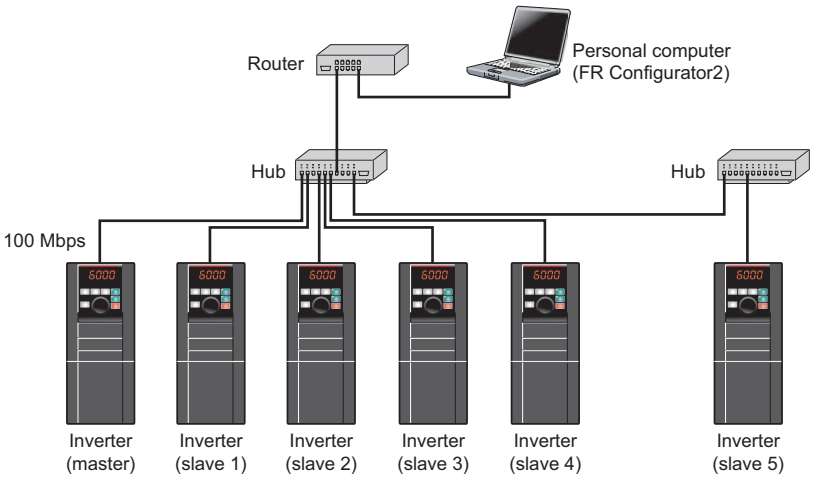

◆Device map

The following shows the I/O devices and special registers used for the inverter-to-inverter link function. (For the details of the other I/O devices and special registers, refer to the PLC Function Programming Manual.)

◆I/O device map (master)

Device No.	Name	Device No.	Name
X40 to X4F	Inverter-to-inverter link input (from slave 1 to master)	Y40 to Y4F	Inverter-to-inverter link output (from master to slave 1)
X50 to X5F	Inverter-to-inverter link input (from slave 2 to master)	Y50 to Y5F	Inverter-to-inverter link output (from master to slave 2)
X60 to X6F	Inverter-to-inverter link input (from slave 3 to master)	Y60 to Y6F	Inverter-to-inverter link output (from master to slave 3)
X70 to X7F	Inverter-to-inverter link input (from slave 4 to master)	Y70 to Y7F	Inverter-to-inverter link output (from master to slave 4)
X80 to X8F	Inverter-to-inverter link input (from slave 5 to master)	Y80 to Y8F	Inverter-to-inverter link output (from master to slave 5)

◆I/O device map (slave)

Device No.	Name	Device No.	Name
X40 to X4F	Inverter-to-inverter link input (from master to slave)	Y40 to Y4F	Inverter-to-inverter link output (from slave to master)

◆Special register (common)

Device No.	Name	Description
SD1460	Station number in inverter-to-inverter link	The station number in the inverter-to-inverter link is stored. b15 b8 b7 b0 Reserved (H00) | Station No. Value / Station No. H00 Master H01 Slave 1 H02 Slave 2 H03 Slave 3 H04 Slave 4 H05 Slave 5 HFF Function disabled

<table>
<tr><th>Device No.</th><th>Name</th><th>Description</th></tr>
<tr><td>SD1461</td><td>Communication status of inverter-to-inverter link</td><td>The communication status of the slaves in the inverter-to-inverter link is stored.
(In the slave inverter, only its own communication status is indicated.)
b15 b5 b4 b0
<table><tr><th>Bit</th><th>Target station</th><th>Description</th></tr><tr><td>0</td><td>Slave 1</td><td rowspan="5">0: The link is not established.
1: The link is established.</td></tr><tr><td>1</td><td>Slave 2</td></tr><tr><td>2</td><td>Slave 3</td></tr><tr><td>3</td><td>Slave 4</td></tr><tr><td>4</td><td>Slave 5</td></tr></table></td></tr>
</table>

◆Special register (master)

Device No.	Name	Description
SD1470 to SD1477	Inverter-to-inverter link receive data 1 to 8 (slave 1)	Data 1 to 8 received from slave 1
SD1478 to SD1485	Inverter-to-inverter link send data 1 to 8 (slave 1)	Data 1 to 8 sent to slave 1
SD1486 to SD1493	Inverter-to-inverter link receive data 1 to 8 (slave 2)	Data 1 to 8 received from slave 2
SD1494 to SD1501	Inverter-to-inverter link send data 1 to 8 (slave 2)	Data 1 to 8 sent to slave 2
SD1502 to SD1509	Inverter-to-inverter link receive data 1 to 8 (slave 3)	Data 1 to 8 received from slave 3
SD1510 to SD1517	Inverter-to-inverter link send data 1 to 8 (slave 3)	Data 1 to 8 sent to slave 3
SD1518 to SD1525	Inverter-to-inverter link receive data 1 to 8 (slave 4)	Data 1 to 8 received from slave 4
SD1526 to SD1533	Inverter-to-inverter link send data 1 to 8 (slave 4)	Data 1 to 8 sent to slave 4
SD1534 to SD1541	Inverter-to-inverter link receive data 1 to 8 (slave 5)	Data 1 to 8 received from slave 5
SD1542 to SD1549	Inverter-to-inverter link send data 1 to 8 (slave 5)	Data 1 to 8 sent to slave 5

◆Special register (slave)

Device No.	Name	Description
SD1470 to SD1477	Inverter-to-inverter link receive data 1 to 8 (master)	Receive data 1 to 8 from master
SD1478 to SD1485	Inverter-to-inverter link send data 1 to 8 (master)	Send data 1 to 8 to master
SD1486 to SD1549	For manufacturer setting. Do not set.	

◆Troubleshooting

Condition	Possible cause	Countermeasure
Communication is not established.	The same station number is assigned to multiple inverters.	Set **Pr.1124** correctly.
	The station numbers are not consecutive.	Set **Pr.1124** so that the station numbers are consecutive.
	The specified number of inverters in the system is not correct. (**Pr.1124** is set to a value equal to or larger than the value set in **Pr.1125**.)	Set **Pr.1125** correctly.
	The connection is half-duplex.	Use full-duplex connection. (When **Pr.1426 Link speed and duplex mode selection** = "0 (initial value)", check that the hub and the Ethernet cable are compatible with full-duplex connection.)
	The inverter is not reset after **Pr.1124** and **Pr.1125** are set.	Reset the inverter.
A command sent by the master is not applied to a slave.	The PLC function is disabled.	Set a value other than "0" in **Pr.414** to enable the PLC function.

3 PROTECTIVE FUNCTIONS

3.1 Causes and corrective actions

◆Warning

Output is not shut off when a protective function is activated.

Operation panel indication	EHR	EHR	FR-LU08 indication	Fault
Name	Ethernet communication fault			
Description	Appears when Ethernet communication is interrupted by physical factors while **Pr.1431 Ethernet signal loss detection function selection** = "1 or 2".			
Check point	• Check that the Ethernet board is installed onto the connector securely. • Check for a break in the Ethernet cable.			
Corrective action	• Connect the Ethernet board securely. • Check that the Ethernet cable is correctly connected to the Ethernet connector. Check that the Ethernet cable is not broken.			

◆Fault

When a protective function is activated, the inverter trips and a fault signal is output.

Operation panel indication	E.EHR	E. EHR	FR-LU08 indication	Fault
Name	Ethernet communication fault (Data code: 231 (HE7))*1			
Description	• Appears when Ethernet communication is interrupted by physical factors while **Pr.1431 Ethernet signal loss detection function selection** = "3". • The inverter trips when Ethernet communication is cut off for the time set in **Pr.1432 Ethernet communication check time interval** or longer between the inverter and all devices with the IP addresses in the range specified for the Ethernet command source selection (**Pr.1449 to Pr.1454**). • Stops the inverter output when excessive noise occurs around the inverter. • When the CC-Link IE Field Network Basic is used, the inverter output is shut off when the data addressed to the own station is not received for the predetermined timeout period or longer, or when the status bit of the cyclic transmission addressed to the own station turns OFF (when the master controller gives a command to stop the cyclic transmission). (For the details of the timeout period, status bit of the cyclic transmission, and command to stop the cyclic transmission, refer to the Instruction Manual of the master controller which supports the CC-Link IE Field Network Basic.) • If an IP address of any other inverter falls within the IP address range set for command source selection while BACnet/IP is used, the inverter output will be shut off after the time period set in **Pr.1432** after power is supplied to the inverter.			
Check point	• Check that the Ethernet board is installed onto the connector securely. • Check for a break in the Ethernet cable. • Check that the **Pr.1432** setting is not too short. • Check for excessive noise around the inverter. • When the CC-Link IE Field Network Basic is used, check that the timeout period set in the master is not shorter than the period during which the inverter does not receive the data addressed to the own station. • When the CC-Link IE Field Network Basic is used, check that the status bit of the cyclic transmission addressed to the own station is not OFF. • When BACnet/IP is used, check that IP addresses of other inverters are not included in the Ethernet IP address range set for command source selection.			
Corrective action	• Connect the Ethernet board securely. • Check that the Ethernet cable is correctly connected to the Ethernet connector. Check that the Ethernet cable is not broken. • Set a larger value in **Pr.1432**. • When excessive noise occurs around the inverter, change the communication setting of the master. (The noise may be reduced by setting a shorter timeout period or increasing the number of retries in the communication setting of the master.) • When the CC-Link IE Field Network Basic is used, set a timeout period longer than the period during which the inverter does not receive the data addressed to the own station. • When the CC-Link IE Field Network Basic is used, turn ON the status bit of the cyclic transmission addressed to the own station. • When BACnet/IP is used, do not include IP addresses of other inverters in the Ethernet IP address range set for command source selection.			

*1 The data code is used for checking the fault detail via communication or for setting **Pr.997 Fault initiation**. (Refer to the Instruction Manual (Detailed) of the FR-A800/FR-F800 inverter.)

4 SPECIFICATIONS

4.1 Common specifications

◆FR-A800-E

Control specifications	Control method		Soft-PWM control, high carrier frequency PWM control (selectable among V/F control, Advanced magnetic flux vector control, Real sensorless vector control), Optimum excitation control, vector control*1, and PM sensorless vector control
	Output frequency range		0.2 to 590 Hz (The upper-limit frequency is 400 Hz under Advanced magnetic flux vector control, Real sensorless vector control, vector control*1, and PM sensorless vector control.)
	Frequency setting resolution	Analog input	0.015 Hz/60 Hz (0 to 10 V/12 bits for terminals 2 and 4) 0.03 Hz/60 Hz (0 to 5 V/11 bits or 0 to 20 mA/approx. 11 bits for terminals 2 and 4, 0 to ±10 V/12 bits for terminal 1) 0.06 Hz/60 Hz (0 to ±5 V/11 bits for terminal 1)
		Digital input	0.01 Hz
	Frequency accuracy	Analog input	Within ±0.2% of the max. output frequency (25°C ± 10°C)
		Digital input	Within 0.01% of the set output frequency
	Voltage/frequency characteristics		Base frequency can be set from 0 to 590 Hz. Constant-torque/variable-torque pattern or adjustable 5 points V/F can be selected.
	Starting torque*2		SLD Rating: 120% 0.3 Hz, LD Rating: 150% 0.3 Hz, ND Rating: 200% 0.3 Hz*3, HD Rating: 250% 0.3 Hz*3 (Real sensorless vector control, vector control*1)
	Torque boost		Manual torque boost
	Acceleration/deceleration time setting		0 to 3600 s (acceleration and deceleration can be set individually), linear or S-pattern acceleration/deceleration mode, backlash countermeasures acceleration/deceleration can be selected.
	DC injection brake (induction motor)		Operation frequency (0 to 120 Hz), operation time (0 to 10 s), operation voltage (0 to 30%) variable
	Stall prevention operation level		Activation range of stall prevention operation (SLD rating: 0 to 120%, LD rating: 0 to 150%, ND rating: 0 to 220%, HD rating: 0 to 280%). Whether to use the stall prevention or not can be selected. (V/F control, Advanced magnetic flux vector control)
	Torque limit level		Torque limit value can be set (0 to 400% variable). (Real sensorless vector control, vector control*1, PM sensorless vector control)
Operation specifications	Frequency setting signal	Analog input	Terminals 2 and 4: 0 to 10 V, 0 to 5 V, 4 to 20 mA (0 to 20 mA) are available. Terminal 1: -10 to +10 V, -5 to +5 V are available.
		Digital input	Input using the setting dial of the operation panel or parameter unit Four-digit BCD or 16-bit binary (when used with option FR-A8AX)
	Start signal		Forward and reverse rotation or start signal automatic self-holding input (3-wire input) can be selected.
	Input signals (twelve terminals)		Low-speed operation command, Middle-speed operation command, High-speed operation command, Second function selection, Terminal 4 input selection, Jog operation selection, Selection of automatic restart after instantaneous power failure, flying start, Output stop, Start self-holding selection, Forward rotation command, Reverse rotation command, Inverter reset The input signal can be changed using **Pr.178 to Pr.189 (Input terminal function selection)**.
		Pulse train input	100 k pulses/s
	Operational functions		Maximum and minimum frequency settings, multi-speed operation, acceleration/deceleration pattern, thermal protection, DC injection brake, starting frequency, JOG operation, output stop (MRS), stall prevention, regeneration avoidance, increased magnetic excitation deceleration, DC feeding*4, frequency jump, rotation display, automatic restart after instantaneous power failure, electronic bypass sequence, remote setting, automatic acceleration/deceleration, retry function, carrier frequency selection, fast-response current limit, forward/reverse rotation prevention, operation mode selection, slip compensation, droop control, load torque high-speed frequency control, speed smoothing control, traverse, auto tuning, applied motor selection, gain tuning, RS-485 communication, Ethernet communication, PID control, PID pre-charge function, easy dancer control, cooling fan operation selection, stop selection (deceleration stop/coasting), power-failure deceleration stop function, stop-on-contact control, PLC function, life diagnosis, maintenance timer, current average monitor, multiple rating, orientation control*1, speed control, torque control, position control, pre-excitation, torque limit, test run, 24 V power supply input for control circuit, safety stop function, anti-sway control
	Output signal	Open collector output (five terminals) Relay output (two terminals)	Inverter running, Up to frequency, Instantaneous power failure/undervoltage*4, Overload warning, Output frequency detection, Fault The output signal can be changed using **Pr.190 to Pr.196 (Output terminal function selection)**. Fault codes of the inverter can be output (4 bits) from the open collector.
		Pulse train output (FM type)	50 k pulses/s
Indication	For meter	Pulse train output (FM type)	Max. 2.4 kHz: one terminal (output frequency) The monitored item can be changed using **Pr.54 FM/CA terminal function selection.**
		Current output (CA type)	Max. 20 mADC: one terminal (output frequency) The monitored item can be changed using **Pr.54 FM/CA terminal function selection.**
		Voltage output	Max. 10 VDC: one terminal (output frequency) The monitored item can be changed using **Pr.158 AM terminal function selection.**
	Operation panel (FR-DU08)	Operating status	Output frequency, Output current, Output voltage, Frequency setting value The monitored item can be changed using **Pr.52 Operation panel main monitor selection**.
		Fault record	A fault record is displayed when a fault occurs. Past 8 fault records and the conditions immediately before the fault (output voltage/current/frequency/cumulative energization time/year/month/date/time) are saved.

Common specifications

Protective/ warning function	Protective function	Overcurrent trip during acceleration, Overcurrent trip during constant speed, Overcurrent trip during deceleration or stop, Regenerative overvoltage trip during acceleration, Regenerative overvoltage trip during constant speed, Regenerative overvoltage trip during deceleration or stop, Inverter overload trip, Motor overload trip, Heat sink overheat, Instantaneous power failure*4, Undervoltage*4, Input phase loss*4*5, Stall prevention stop, Loss of synchronism detection*5, Brake transistor alarm detection*6, Output side earth (ground) fault overcurrent, Output short circuit, Output phase loss, External thermal relay operation*5, PTC thermistor operation*5, Option fault, Communication option fault, Parameter storage device fault, PU disconnection, Retry count excess*5, CPU fault, Operation panel power supply short circuit, 24 VDC power fault, Abnormal output current detection*5, Inrush current limit circuit fault*4, Ethernet communication fault*5, Analog input fault, USB communication fault, Safety circuit fault, Overspeed occurrence*5, Speed deviation excess detection*1*5, Signal loss detection*1*5, Excessive position fault*1*5, Brake sequence fault*5, Encoder phase fault*1*5, 4 mA input fault*5, Pre-charge fault*5, PID signal fault*5, Option fault, Opposite rotation deceleration fault*5, Internal circuit fault, Abnormal internal temperature*7, Magnetic pole position unknown*1, External fault during output operation*5
	Warning function	Fan alarm, Stall prevention (overcurrent), Stall prevention (overvoltage), Regenerative brake pre-alarm*5*6, Electronic thermal relay function pre-alarm, PU stop, Speed limit indication*5, Parameter copy, Safety stop, Maintenance timer 1 to 3*5, USB host error, Home position return setting error*5, Home position return uncompleted*5, Home position return parameter setting error*5, Operation panel lock*5, Password locked*5, Parameter write error, Copy operation error, 24 V external power supply operation, Internal fan alarm*7, Continuous operation during communication fault, Load fault warning, Ethernet communication fault
Environment	Surrounding air temperature	-10°C to +50°C (non-freezing) (LD, ND, HD ratings) -10°C to +40°C (non-freezing) (SLD rating, IP55 compatible model)
	Surrounding air humidity	95% RH or less (non-condensing) (With circuit board coating (conforming to IEC 60721-3-3 3C2/3S2), IP55 compatible model) 90% RH or less (non-condensing) (Without circuit board coating)
	Storage temperature*8	-20°C to +65°C
	Atmosphere	Indoors (without corrosive gas, flammable gas, oil mist, dust and dirt, etc.)
	Altitude/vibration	2500 m or lower*9, 5.9 m/s^2*10 or less at 10 to 55 Hz (directions of X, Y, Z axes)

*1 Available only when a vector control compatible option is installed.
*2 For PM sensorless vector control, refer to the Instruction Manual (Detailed) of the FR-A800 inverter.
*3 In the initial setting of the FR-A820-00340(5.5K) or higher and the FR-A840-00170(5.5K) or higher, it is limited to 150% by the torque limit level.
*4 Enabled only for standard models and IP55 compatible models.
*5 This protective function is not available in the initial status.
*6 Enabled only for standard models.
*7 Available for the IP55 compatible model only.
*8 Temperature applicable for a short time, e.g. in transit.
*9 For the installation at an altitude above 1000 m, consider a 3% reduction in the rated current per altitude increase of 500 m.
*10 2.9 m/s^2 or less for the FR-A840-04320(160K) or higher.

◆FR-F800-E

Control specifications	Control method		Soft-PWM control, high carrier frequency PWM control (selectable among V/F control (Optimum excitation control), Advanced magnetic flux vector control (Advanced optimum excitation control) and PM motor control)
	Output frequency range		0.2 to 590 Hz (The upper-limit frequency is 400 Hz under Advanced magnetic flux vector control, and PM motor control.)
	Frequency setting resolution	Analog input	0.015 Hz/60 Hz (terminal 2, 4: 0 to 10 V/12 bits) 0.03 Hz/60 Hz (0 to 5 V/11 bits or 0 to 20 mA/approx. 11 bits for terminals 2 and 4, 0 to ±10 V/12 bits for terminal 1) 0.06 Hz/60 Hz (0 to ±5 V/11 bits for terminal 1)
		Digital input	0.01 Hz
	Frequency accuracy	Analog input	Within ±0.2% of the max. output frequency (25°C ±10°C)
		Digital input	Within 0.01% of the set output frequency
	Voltage/frequency characteristics		Base frequency can be set from 0 to 590 Hz. Constant-torque/variable-torque pattern or adjustable 5 points V/F can be selected.
	Starting torque	Induction motor	120% 0.5 Hz (Advanced magnetic flux vector control)
		IPM motor	50%
	Torque boost		Manual torque boost
	Acceleration/deceleration time setting		0 to 3600 s (acceleration and deceleration can be set individually), linear or S-pattern acceleration/deceleration mode, backlash countermeasures acceleration/deceleration can be selected.
	DC injection brake (induction motor)		Operation frequency (0 to 120 Hz), operation time (0 to 10 s), operation voltage (0 to 30%) variable
	Stall prevention operation level		Activation range of stall prevention operation (SLD rating: 0 to 120%, LD rating: 0 to 150%). Whether to use the stall prevention or not can be selected. (V/F control, Advanced magnetic flux vector control)
Operation specifications	Frequency setting signal	Analog input	Terminals 2 and 4: 0 to 10 V, 0 to 5 V, 4 to 20 mA (0 to 20 mA) are available. Terminal 1: -10 to +10 V, -5 to 5 V are available.
		Digital input	Input using the setting dial of the operation panel or the parameter unit Four-digit BCD or 16-bit binary (when used with option FR-A8AX)
	Start signal		Forward and reverse rotation or start signal automatic self-holding input (3-wire input) can be selected.
	Input signals (twelve terminals)		Low-speed operation command, Middle-speed operation command, High-speed operation command, Second function selection, Terminal 4 input selection, Jog operation selection, Output stop, Start self-holding selection, Forward rotation command, Reverse rotation command, Inverter reset The input signal can be changed using **Pr.178 to Pr.189 (Input terminal function selection)**.
	Pulse train input		100 k pulses/s
	Operational functions		Maximum and minimum frequency settings, multi-speed operation, acceleration/deceleration pattern, thermal protection, DC injection brake, starting frequency, JOG operation, output stop (MRS), stall prevention, regeneration avoidance, increased magnetic excitation deceleration, DC feeding*1, frequency jump, rotation display, automatic restart after instantaneous power failure, electronic bypass sequence, remote setting, retry function, carrier frequency selection, fast-response current limit, forward/reverse rotation prevention, operation mode selection, slip compensation, speed smoothing control, traverse, auto tuning, applied motor selection, RS-485 communication, Ethernet communication, PID control, PID pre-charge function, cooling fan operation selection, stop selection (deceleration stop/coasting), power-failure deceleration stop function, PLC function, life diagnosis, maintenance timer, current average monitor, multiple rating, test run, 24 V power supply input for control circuit, safety stop function, self power management, BACnet communication, PID gain tuning, cleaning, load characteristics storage, emergency drive*1
	Output signal Open collector output (five terminals) Relay output (two terminals)		Inverter running, Up to frequency, Instantaneous power failure/undervoltage*1, Overload warning, Output frequency detection, Fault The output signal can be changed using **Pr.190 to Pr.196 (Output terminal function selection)**. Fault codes of the inverter can be output (4 bits) from the open collector.
	Pulse train output		50 k pulses/s
Indication	For meter	Pulse train output (FM type)	Max. 2.4 kHz: one terminal (output frequency) The monitored item can be changed using **Pr.54 FM/CA terminal function selection**.
		Current output (CA type)	Max. 20 mADC: one terminal (output frequency) The monitored item can be changed using **Pr.54 FM/CA terminal function selection**.
		Voltage output	Max. 10 VDC: one terminal (output frequency) The monitored item can be changed using **Pr.158 AM terminal function selection**.
	Operation panel (FR-DU08)	Operating status	Output frequency, output current, output voltage, frequency setting value The monitored item can be changed using **Pr.52 Operation panel main monitor selection**.
		Fault record	Fault record is displayed when a fault occurs. Past 8 fault records and the conditions immediately before the fault (output voltage/current/frequency/cumulative energization time/year/month/date/time) are saved.
Protective/ warning function		Protective function	Overcurrent trip during acceleration, Overcurrent trip during constant speed, Overcurrent trip during deceleration or stop, Regenerative overvoltage trip during acceleration, Regenerative overvoltage trip during constant speed, Regenerative overvoltage trip during deceleration or stop, Inverter overload trip (electronic thermal relay function), Motor overload trip (electronic thermal relay function), Heat sink overheat, Instantaneous power failure*1, Undervoltage*1, Input phase loss*1*2, Stall prevention stop, Loss of synchronism detection*2, Upper limit fault detection, Lower limit fault detection, Brake transistor alarm detection*1, Output side earth (ground) fault overcurrent, Output short circuit, Output phase loss, External thermal relay operation*2, PTC thermistor operation*2, Option fault, Communication option fault, Parameter storage device fault, PU disconnection, Retry count excess*2, CPU fault, Operation panel power supply short circuit, 24 VDC power fault, Abnormal output current detection*2, Inrush current limit circuit fault*1, Ethernet communication fault*2, Analog input fault, USB communication fault, Safety circuit fault, Overspeed occurrence*2, 4 mA input fault*2, Pre-charge fault*2, PID signal fault*2, Internal circuit fault, User definition error in the PLC function, Abnormal internal temperature*3
		Warning function	Fan alarm, Stall prevention (overcurrent), Stall prevention (overvoltage), Regenerative brake pre-alarm*1*2, Electronic thermal relay function pre-alarm, PU stop, Parameter copy, Safety stop, Maintenance timer 1 to 3*2, USB host error, Operation panel lock*2, Password locked*2, Parameter write error, Copy operation error, 24 V external power supply operation, Load fault warning, Emergency drive in operation*1, Continuous operation during communication fault, Internal fan alarm*3, Ethernet communication fault

Common specifications

Environment	**Surrounding air temperature**	-10°C to +50°C (non-freezing) (LD rating) -10°C to +40°C (non-freezing) (SLD rating, IP55 compatible models)
	Surrounding air humidity	With circuit board coating (conforming to IEC 60721-3-3 3C2/3S2): 95% RH or less (non-condensing) Without circuit board coating: 90% RH or less (non-condensing)
	Storage temperature∗4	-20°C to +65°C
	Atmosphere	Indoors (without corrosive gas, flammable gas, oil mist, dust and dirt, etc.)
	Altitude/vibration	2500 m or lower∗5, 5.9 m/s^2 or less∗6 at 10 to 55 Hz (directions of X, Y, Z axes)

∗1 Available only for the standard model.

∗2 This protective function is not available in the initial status.

∗3 Available only for the IP55 compatible model.

∗4 Temperature applicable for a short time, e.g. in transit.

∗5 For the installation at an altitude above 1000 m, consider a 3% reduction in the rated current per altitude increase of 500 m.

∗6 2.9 m/s^2 or less for the FR-F840-04320(185K) or higher.

4.2 Parameters (functions) and instruction codes under different control methods

The following table shows the Ethernet communication parameters, the corresponding instruction codes, and the availability of the parameters by control method.

For information on the instruction codes and availability of other parameters by control method, refer to the Instruction Manual (Detailed) of the FR-A800/FR-F800 inverter.

Pr.	Name	Instruction code*1			Control method*2									Parameter		
							Vector			Sensorless		PM				
		Read	Write	Extended	V/F	Magnetic flux	Speed control *6	Torque control *6	Position control *6	Speed control *6	Torque control *6	Speed control	Position control *5, *6	Copy*3	Clear*3	All clear*3
1124	Station number in inverter-to-inverter link	18	98	B	○	○	○	○	○	○	○	○	○	○	○*4	○*4
1125	Number of inverters in inverter-to-inverter link system	19	99	B	○	○	○	○	○	○	○	○	○	○	○*4	○*4
1424	Ethernet communication network number	18	98	E	○	○	○	○	○	○	○	○	○	○	○*4	○*4
1425	Ethernet communication station number	19	99	E	○	○	○	○	○	○	○	○	○	○	○*4	○*4
1426	Link speed and duplex mode selection	1A	9A	E	○	○	○	○	○	○	○	○	○	○	○*4	○*4
1427	Ethernet function selection 1	1B	9B	E	○	○	○	○	○	○	○	○	○	○	○*4	○*4
1428	Ethernet function selection 2	1C	9C	E	○	○	○	○	○	○	○	○	○	○	○*4	○*4
1429	Ethernet function selection 3	1D	9D	E	○	○	○	○	○	○	○	○	○	○	○*4	○*4
1431	Ethernet signal loss detection function selection	1F	9F	E	○	○	○	○	○	○	○	○	○	○	○*4	○*4
1432	Ethernet communication check time interval	20	A0	E	○	○	○	○	○	○	○	○	○	○	○*4	○*4
1434	Ethernet IP address 1	22	A2	E	○	○	○	○	○	○	○	○	○	×	○*4	○*4
1435	Ethernet IP address 2	23	A3	E	○	○	○	○	○	○	○	○	○	×	○*4	○*4
1436	Ethernet IP address 3	24	A4	E	○	○	○	○	○	○	○	○	○	×	○*4	○*4
1437	Ethernet IP address 4	25	A5	E	○	○	○	○	○	○	○	○	○	×	○*4	○*4
1438	Subnet mask 1	26	A6	E	○	○	○	○	○	○	○	○	○	○	○*4	○*4
1439	Subnet mask 2	27	A7	E	○	○	○	○	○	○	○	○	○	○	○*4	○*4
1440	Subnet mask 3	28	A8	E	○	○	○	○	○	○	○	○	○	○	○*4	○*4
1441	Subnet mask 4	29	A9	E	○	○	○	○	○	○	○	○	○	○	○*4	○*4
1442	Ethernet IP filter address 1	2A	AA	E	○	○	○	○	○	○	○	○	○	○	○*4	○*4
1443	Ethernet IP filter address 2	2B	AB	E	○	○	○	○	○	○	○	○	○	○	○*4	○*4
1444	Ethernet IP filter address 3	2C	AC	E	○	○	○	○	○	○	○	○	○	○	○*4	○*4
1445	Ethernet IP filter address 4	2D	AD	E	○	○	○	○	○	○	○	○	○	○	○*4	○*4
1446	Ethernet IP filter address 2 range specification	2E	AE	E	○	○	○	○	○	○	○	○	○	○	○*4	○*4
1447	Ethernet IP filter address 3 range specification	2F	AF	E	○	○	○	○	○	○	○	○	○	○	○*4	○*4
1448	Ethernet IP filter address 4 range specification	30	B0	E	○	○	○	○	○	○	○	○	○	○	○*4	○*4
1449	Ethernet command source selection IP address 1	31	B1	E	○	○	○	○	○	○	○	○	○	○	○*4	○*4
1450	Ethernet command source selection IP address 2	32	B2	E	○	○	○	○	○	○	○	○	○	○	○*4	○*4
1451	Ethernet command source selection IP address 3	33	B3	E	○	○	○	○	○	○	○	○	○	○	○*4	○*4
1452	Ethernet command source selection IP address 4	34	B4	E	○	○	○	○	○	○	○	○	○	○	○*4	○*4
1453	Ethernet command source selection IP address 3 range specification	35	B5	E	○	○	○	○	○	○	○	○	○	○	○*4	○*4
1454	Ethernet command source selection IP address 4 range specification	36	B6	E	○	○	○	○	○	○	○	○	○	○	○*4	○*4
1455	Keepalive time	37	B7	E	○	○	○	○	○	○	○	○	○	○	○*4	○*4

*1 Instruction codes are used to read or write parameters through the Ethernet network (MODBUS/TCP or CC-Link IE Field Network Basic). (Refer to page 61 for the details of the MODBUS/TCP, and page 40 for the details of the CC-Link IE Field Network Basic.)

*2 Function availability under each control method is as follows:
○: Available
× : Not available

*3 For "parameter copy", "parameter clear", and "all parameter clear", "○" indicates the function is available, and "×" indicates the function is not available.

*4 Communication parameters that are not cleared by Parameter clear (All parameter clear) through the Ethernet network (MODBUS/TCP or CC-Link IE Field Network Basic). (Refer to page 61 for the details of the MODBUS/TCP, and page 40 for the details of the CC-Link IE Field Network Basic.)

*5 Position control is enabled when an MM-CF IPM motor is used with the low-speed range high-torque characteristic enabled (**Pr.788 Low speed range torque characteristic selection** = "9999" (initial value)).

*6 FR-A800-E only

5 Appendix

5.1 Instructions for CC-Link IE Field Network Basic

When only CC-Link IE Field Network Basic is selected for the application, group numbers can be set.

Pr.	Name	Initial value	Setting value	Applications
1427 N630	Ethernet function selection 1	5001	61450	CC-Link IE Field Network Basic
1428 N631	Ethernet function selection 2	45237	9999	Unselected
1429 N632	Ethernet function selection 3	9999	9999	Unselected

◆Group number setting

- Set a group number to each slave station to divide slave stations into groups and perform cyclic transmission by the group. By grouping the slaves by their reference response times, cyclic transmission can be performed smoothly regardless of the differences of the reference response times. (Refer to the CC-Link IE Field Network Basic Reference Manual (SH-081684ENG) for the details.)

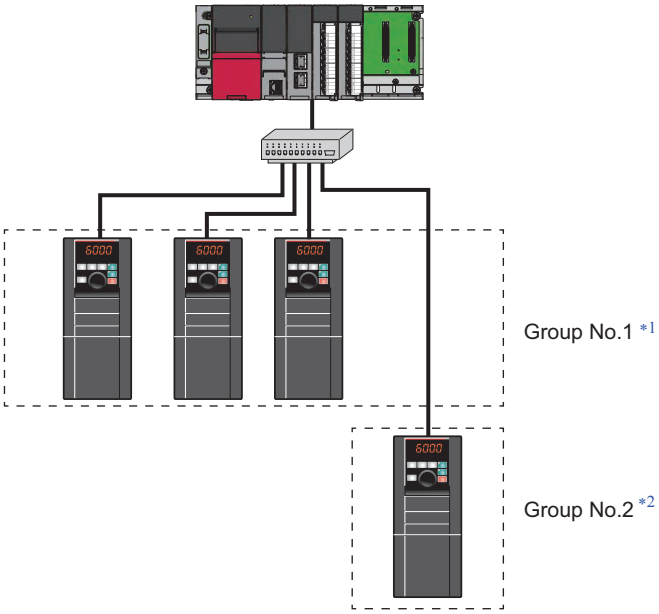

*1 The number of occupied stations for one group is up to 16.
*2 Up to four groups can be organized.

REVISIONS

*The manual number is given on the bottom left of the back cover.

Revision Date	*Manual Number	Revision
May 2016	IB(NA)-0600628ENG-A	First edition
Nov. 2016	IB(NA)-0600628ENG-B	Addition • FR-F800-E • CC-Link IE Field Network Basic • Inverter-to-inverter link function
Mar. 2019	IB(NA)-0600628ENG-C	Addition • BACnet/IP

MITSUBISHI ELECTRIC CORPORATION
HEAD OFFICE: TOKYO BUILDING 2-7-3, MARUNOUCHI, CHIYODA-KU, TOKYO 100-8310, JAPAN

IB(NA)-0600628ENG-C(1903)MEE Printed in Japan

Specifications subject to change without notice.