MITSUBISHI ELECTRIC

INVERTER
FR-A800
FR-A806 (IP55/UL Type 12 SPECIFICATIONS)
INSTRUCTION MANUAL (HARDWARE)

High functionality and high performance

FR-A846-00023(0.4K) to 03610(132K)

INTRODUCTION 1

INSTALLATION AND WIRING 2

PRECAUTIONS FOR USE OF THE INVERTER 3

PROTECTIVE FUNCTIONS 4

PRECAUTIONS FOR MAINTENANCE AND INSPECTION 5

SPECIFICATIONS 6

Thank you for choosing this Mitsubishi Electric inverter.
This Instruction Manual describes handling and cautions about the hardware, such as installation and wiring, for the FR-A806 (IP55/UL Type 12 specification product) that are different from the FR-A800.
Information about the software, such as basic operations and parameters, is described in the Instruction Manual (Detailed) in the CD-ROM enclosed with the product.
In addition to this manual, please read the manuals in the enclosed CD-ROM carefully. Do not use this product until you have a full knowledge of the equipment, safety information and instructions.
Please forward this Instruction Manual to the end user.

Safety Instructions

Do not attempt to install, operate, maintain or inspect this product until you have read through this Instruction Manual (Detailed) and supplementary documents carefully and can use the equipment correctly. Do not use this product until you have a full knowledge of this product mechanism, safety information and instructions.
Installation, operation, maintenance and inspection must be performed by qualified personnel. Here, an expert means a person who meets all the conditions below.

- A person who took a proper engineering training. Such training may be available at your local Mitsubishi Electric office. Contact your local sales office for schedules and locations.
- A person who can access operating manuals for the protective devices (e.g. light curtain) connected to the safety control system. A person who has read and familiarized himself/herself with the manuals.

In this Instruction Manual (Detailed), the safety instruction levels are classified into "WARNING" and "CAUTION"

⚠WARNING	Incorrect handling may cause hazardous conditions, resulting in death or severe injury.
⚠CAUTION	Incorrect handling may cause hazardous conditions, resulting in medium or slight injury, or may cause only material damage.

The ⚠CAUTION level may even lead to a serious consequence according to conditions. Both instruction levels must be followed because these are important to personal safety.

◆ Electric Shock Prevention

⚠WARNING

- Do not remove the front cover or the wiring cover while the power of this product is ON, and do not run this product with the front cover or the wiring cover removed as the exposed high voltage terminals or the charging part of the circuitry can be touched. Otherwise you may get an electric shock.
- Even if power is OFF, do not remove the front cover except for wiring or periodic inspection. You may accidentally touch the charged inverter circuits and get an electric shock.
- Before wiring or inspection, LED indication of the operation panel must be switched OFF. Any person who is involved in wiring or inspection shall wait for at least 10 minutes after the power supply has been switched OFF and check that there are no residual voltage using a tester or the like. The capacitor is charged with high voltage for some time after power OFF, and it is dangerous.
- This product must be earthed (grounded). Earthing (grounding) must conform to the requirements of national and local safety regulations and electrical code (NEC section 250, IEC 61140 class 1 and other applicable standards). A neutral-point earthed (grounded) power supply in compliance with EN standard must be used.
- Any person who is involved in wiring or inspection of this product shall be fully competent to do the work.
- This product body must be installed before wiring. Otherwise you may get an electric shock or be injured.
- Do not touch the setting dial or keys with wed hands. Doing so may cause an electric shock.
- Do not subject the cables to scratches, excessive stress, heavy loads or pinching. Doing so may cause an electric shock.
- Do not change the cooling fan while power is ON as it is dangerous to change the cooling fan while power is ON.
- Do not touch the printed circuit board or handle the cables with wet hands. Doing so may cause an electric shock.
- Never touch the motor terminals, etc. right after powering OFF as the DC voltage is applied to the motor for 1 second at powering OFF if the main circuit capacitor is measured. Doing so may cause an electric shock.
- Before wiring or inspection for a PM motor, confirm that the PM motor is stopped as a PM motor is a synchronous motor with high-performance magnets embedded inside and high-voltage is generated at the motor terminals while the motor is running even after the power of this product is turned OFF. In an application, such as fan and blower, that the motor may be driven by the load, connect a low-voltage manual contactor at this product output side and keep it open during wiring and inspection of this product. Otherwise you may get an electric shock.

◆ Fire Prevention

⚠CAUTION

- Inverter must be installed on a nonflammable wall without holes (so that its components cannot be touched from behind). Mounting it to or near flammable material may cause a fire.
- If the inverter becomes faulty, the inverter power must be switched OFF. A continuous flow of large current may cause a fire.
- Resistors cannot be used. Do not connect a resistor directly to the DC terminals P/+ and N/-. Doing so could cause a fire.
- Be sure to perform daily and periodic inspections as specified in the Instruction Manual. There is a possibility of explosion, damage, or fire if this product is used without inspection.

◆ Injury Prevention

⚠CAUTION

- The voltage applied to each terminal must be the ones specified in the Instruction Manual. Otherwise an explosion or damage may occur.
- The cables must be connected to the correct terminals. Otherwise an explosion or damage may occur.
- The polarity (+ and -) must be correct. Otherwise an explosion or damage may occur.
- While power is ON or for some time after power-OFF, do not touch the inverter as it will be extremely hot. Touching these devices may cause burns.

◆ Additional Instructions

The following instructions must be also followed. If the product is handled incorrectly, it may cause unexpected fault, an injury, or an electric shock.

⚠ CAUTION

Transportation and installation

- To prevent injury, wear cut-resistant gloves when opening packaging with sharp tools.
- Use proper lifting techniques or a trolley when carrying products. Failure to do so may lead to injuries.
- Do not stand or rest heavy objects on the product.
- Do not stack the boxes containing inverters higher than the number recommended.
- When carrying the inverter, do not hold it by the front cover; it may fall off or fail.
- During installation, caution must be taken not to drop the inverter as doing so may cause injuries.
- The product must be installed on a surface that withstands the weight of the inverter.
- Do not install the product on a hot surface.
- Ensure the mounting orientation of this product is correct.
- Ensure this product is mounted securely in its enclosure.
- Do not install or operate the inverter if it is damaged or has parts missing.
- Foreign conductive objects must be prevented from entering the inverter. That includes screws and metal fragments or other flammable substance such as oil.
- As the inverter is a precision instrument, do not drop or subject it to impact.
- The ambient temperature must be between -10 and +40°C (non-freezing). Otherwise the inverter may be damaged.
- The ambient humidity must be 95% RH or less (non-condensing). Otherwise the inverter may be damaged. (Refer to page 18 for details.)
- The storage temperature (applicable for a short time, e.g. during transit) must be between -20 and +65°C. Otherwise the inverter may be damaged.
- The inverter must be used indoors (without corrosive gas, flammable gas, oil mist, dust and dirt etc.) Otherwise the inverter may be damaged.
- Do not use this product at an altitude above 2500 m. Vibration should not exceed 5.9 m/s^2 *1 at 10 to 55 Hz in X, Y and Z directions. Otherwise the inverter may be damaged. (For installation at an altitude above 1000 m, consider a 3% reduction in the rated current per 500 m increase in altitude.)
- If halogens (including fluorine, chlorine, bromine, and iodine) contained in fumigants for wood packages enter this product, the product may be damaged. Prevent the entry of fumigant residuals or use an alternative method such as heat disinfection. Note that sterilization or disinfection of wood packages should be performed before packing the product.

Wiring

- Do not install a power factor correction capacitor, surge absorber, or radio noise filter on the output side of this product. These devices may overheat or burn out.
- The output terminals (terminals U, V, and W) must be connected to a motor correctly. Otherwise the motor will rotate inversely.
- PM motor terminals (U, V, W) hold high-voltage while the PM motor is running even after the power is turned OFF. Before wiring, the PM motor must be confirmed to be stopped. Otherwise you may get an electric shock.
- Never connect a PM motor to a commercial power supply. Connecting a commercial power supply to the input terminals (U, V, W) of a PM motor will burn it out. The PM motor must be connected with the output terminals (U, V, W) of the inverter.

Test operation

- Before starting operation, each parameter must be confirmed and adjusted. Failure to do so may cause some machines to make unexpected motions.

*1 2.9 m/s^2 or less for the FR-A846-01800(55K) or higher.

⚠ WARNING

Usage

- Stay away from the equipment when the retry function is set as it will restart suddenly after a trip.
- STOP RESET Since pressing a key may not stop output depending on the function setting status, separate circuit and switch that make an emergency stop (power OFF, mechanical brake operation for emergency stop, etc.) must be provided.
- OFF status of the start signal must be confirmed before resetting the inverter fault. Resetting inverter fault with the start signal ON restarts the motor suddenly.
- Do not use a PM motor for an application where the PM motor is driven by its load and runs at a speed higher than the maximum motor speed.
- Use this inverter only with three-phase induction motors or with a PM motor. Connection of any other electrical equipment to the inverter output may damage the equipment.
- Performing pre-excitation (LX signal and X13 signal) under torque control (Real sensorless vector control) may start the motor running at a low speed even when the start command (STF or STR) is not input The motor may run also at a low speed when the speed limit value = 0 with a start command input. It must be confirmed that the motor running will not cause any safety problems before performing pre-excitation.
- Do not modify the equipment.
- Do not perform parts removal which is not instructed in this manual. Doing so may lead to fault or damage of the product.

⚠ CAUTION

Usage

- The electronic thermal relay function does not guarantee protection of the motor from overheating. It is recommended to install both an external thermal and PTC thermistor for overheat protection.
- Do not repeatedly start or stop this product with a magnetic contactor on its input side. Doing so may shorten the life of this product.
- The effect of electromagnetic interference must be reduced by using a noise filter or by other means. Otherwise nearby electronic equipment may be affected.
- Appropriate precautions must be taken to suppress harmonics. Otherwise power supply harmonics from the inverter may heat/damage the power factor correction capacitor and generator.
- When driving a 400 V class motor with this product, the motor must be an insulation-enhanced motor or measures must be taken to suppress surge voltage. Otherwise surge voltage, which is attributed to the length and thickness of wire, may occur at the motor terminals, causing the motor insulation to deteriorate.
- When parameter clear or all parameter clear is performed, the required parameters must be set again before starting operations because all parameters return to their initial values.
- The inverter can be easily set for high-speed operation. Before changing its setting, the performances of the motor and machine must be fully examined.
- This product's brake function cannot be used as a mechanical brake. Use a separate device instead.
- Perform an inspection and test operation of this product if it has been stored for a long period of time.
- Static electricity in your body must be discharged before you touch the product.
- Only one PM motor can be connected to an inverter.
- A PM motor must be used under PM sensorless vector control. Do not use a synchronous motor, induction motor, or synchronous induction motor.
- Do not connect a PM motor in the induction motor control settings (initial settings). Do not use an induction motor in the PM sensorless vector control settings. It will cause a failure.
- In the system with a PM motor, the inverter power must be turned ON before closing the contacts of the contactor at the output side.

⚠ CAUTION

Emergency stop

- **A safety backup such as an emergency brake must be provided for devices or equipment in a system to prevent hazardous conditions in case of failure of this product or an external device controlling this product.**
- **If the breaker installed on the input side of this product trips, check for wiring faults (short circuits etc.) and damage to internal parts of this product. The cause of the trip must be identified and removed before turning ON the power of the breaker.**
- **When a protective function activates, take an appropriate corrective action, then reset the inverter, and resume the operation.**

Maintenance, inspection and parts replacement

- **Do not carry out a megger (insulation resistance) test on the control circuit of the inverter. It will cause failure.**

Disposal

- **The inverter must be treated as industrial waste.**

⚠ CAUTION

Waterproof and dustproof performances

- **The inverter is rated with an IPX5*1 waterproof rating and an IP5X*2 dustproof rating when the operation panel (FR-DU08-01), the front cover, the wiring cover, and the cable glands are securely fixed with screws.**
- **The items enclosed with the inverter such as the Instruction Manual or CD are not rated with the IPX5 waterproof or IP5X dustproof ratings.**
- **Although the inverter is rated with the IPX5 waterproof and IP5X dustproof ratings, it is not intended for use in water. Also, the ratings do not guarantee protection of the inverter from needless submersion in water or being washed under strong running water such as a shower.**
- **Do not pour or apply the following liquids over the inverter: water containing soap, detergent, or bath additives; sea water; swimming pool water; warm water; boiling water; etc.**
- **The inverter is intended for indoor*4 installation and not for outdoor installation. Avoid places where the inverter is subjected to direct sunlight, rain, sleet, snow, or freezing temperatures.**
- **If the operation panel (FR-DU08-01) is not installed, if the screws of the operation panel are not tightened, or if the operation panel is damaged or deformed, the IPX5 waterproof performance and the IP5X dustproof performance are impaired. If any abnormalities are found on the operation panel, ask for an inspection and repair.**
- **If the screws of the front cover or the wiring cover are not tightened, if any foreign matter (hair, sand grain, fiber, etc.) is stuck between the inverter and the gasket, if the gasket is damaged, or if the front cover or the wiring cover is damaged or deformed, the IPX5 waterproof performance and the IP5X dustproof performance are impaired. If any abnormalities are found on the front cover, wiring cover, or the gasket of the inverter, ask for an inspection and repair.**
- **Cable glands are important components to maintain the waterproof and dustproof performances. Be sure to use cable glands of the recommended size and shape or equivalent. The standard protective bushes cannot sufficiently maintain the IPX5 waterproof performance and the IP5X dustproof performance.**
- **If a cable gland is damaged or deformed, the IPX5 waterproof performance and the IP5X dustproof performance are impaired. If any abnormalities are found on the cable glands, ask the manufacturer of the cable glands for an inspection and repair.**
- **To maintain the waterproof and dustproof performances of the inverter, daily and periodic inspections are recommended regardless of the presence or absence of abnormalities.**

*1 IPX5 refers to protection of the inverter functions against water jets from any direction when about 12.5-liter water*3 is injected from a nozzle with an inside diameter of 6.3 mm from the distance of about 3 m for at least 3 minutes.

*2 IP5X refers to protection of the inverter functions and maintenance of safety when the inverter is put into a stirring device containing dust of 75 μm or smaller in diameter, stirred for 8 hours, and then removed from the device.

*3 Water here refers to fresh water at room temperature (5 to 35°C).

*4 Indoor here refers to the environments that are not affected by climate conditions.

General instruction

- **Many of the diagrams and drawings in the Instruction Manual show the product without a cover or partially open for explanation. Never operate the product in this manner. The cover must be always reinstalled and the instruction in the Instruction Manual must be followed when operating the product. For more details on the PM motor, refer to the Instruction Manual of the PM motor.**

Application of caution labels

Caution labels are used to ensure safety during use of Mitsubishi Electric inverters.

Apply the following labels to the inverter if the "retry function" and/or "automatic restart after instantaneous power failure" have been enabled.

- For the retry function

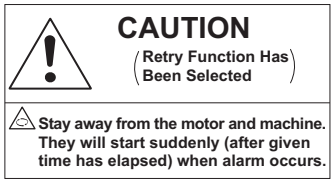

- For automatic restart after instantaneous power failure

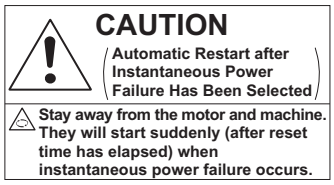

Application of motor control labels

Apply the following labels to the inverter to avoid connecting motors not intended for a particular motor control setting.

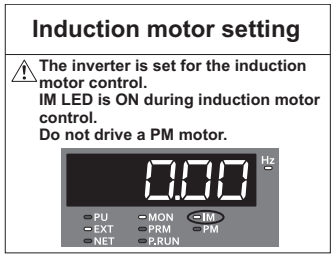

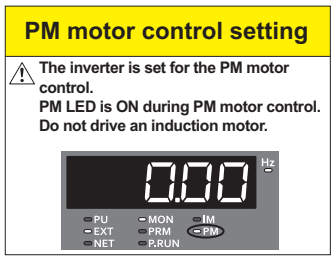

1 INTRODUCTION 7

1.1 Product checking and accessories 8

1.2 Component names 9

1.3 About the related manuals 10

2 INSTALLATION AND WIRING 11

2.1 Peripheral devices 12

2.1.1 Inverter and peripheral devices 12
2.1.2 Peripheral devices 14

2.2 Removal and reinstallation of the front cover 15

2.3 Installation of the inverter 18

2.3.1 Inverter installation environment 18
2.3.2 Amount of heat generated by the inverter 20
2.3.3 Inverter installation 21

2.4 Terminal connection diagrams 22

2.5 Main circuit terminals 26

2.5.1 Details on the main circuit terminals 26
2.5.2 Terminal layout of the main circuit terminals, wiring of power supply and the motor 26
2.5.3 Wiring method 27
2.5.4 Applicable cables and the wiring length 31
2.5.5 Earthing (grounding) precautions 33

2.6 Control circuit 34

2.6.1 Details on the control circuit terminals 34
2.6.2 Control logic (sink/source) change 38
2.6.3 Wiring of control circuit 40
2.6.4 Wiring precautions 42
2.6.5 When supplying 24 V external power to the control circuit 43
2.6.6 Safety stop function 45

2.7 Operation panel (FR-DU08-01) 47

2.7.1 Differences with the FR-DU08 47
2.7.2 Components of the operation panel (FR-DU08-01) 48
2.7.3 Basic operation of the operation panel 49

2.8 Communication connectors and terminals 50

2.8.1 PU connector 50
2.8.2 USB connector 51
2.8.3 RS-485 terminal block 53

2.9 Connection of motor with encoder (vector control) 54

2.10 Parameter settings for a motor with encoder 60

2.11 Connection of stand-alone option units 63

2.11.1 Connection of the brake unit (FR-BU2) 63

2.11.2 Connection of the brake unit (FR-BU) 65
2.11.3 Connection of the brake unit (BU type)....66
2.11.4 Connection of the high power factor converter (FR-HC2) 67
2.11.5 Connection of the multifunction regeneration converter (FR-XC)....68
2.11.6 Connection of the power regeneration common converter (FR-CV) 72
2.11.7 Connection of the power regeneration converter (MT-RC)....73

3 PRECAUTIONS FOR USE OF THE INVERTER 75

3.1 Electro-magnetic interference (EMI) and leakage currents 76

3.1.1 Leakage currents and countermeasures 76
3.1.2 Countermeasures against inverter-generated EMI....78
3.1.3 Built-in EMC filter 80

3.2 Power supply harmonics 82

3.2.1 Power supply harmonics....82
3.2.2 Harmonic suppression guidelines in Japan 83

3.3 Installation of a reactor 85

3.4 Power-OFF and magnetic contactor (MC) 86

3.5 Countermeasures against deterioration of the 400 V class motor insulation 87

3.6 Checklist before starting operation 88

3.7 Failsafe system which uses the inverter 90

4 PROTECTIVE FUNCTIONS 93

4.1 Inverter fault and alarm indications 94

4.2 Reset method for the protective functions 94

4.3 Fault history and the list of fault displays 95

5 PRECAUTIONS FOR MAINTENANCE AND INSPECTION 97

5.1 Inspection item 98

5.1.1 Daily inspection....98
5.1.2 Periodic inspection....98
5.1.3 Daily and periodic inspection 99
5.1.4 Checking the inverter and converter modules 101
5.1.5 Cleaning....101
5.1.6 Replacement of parts....102
5.1.7 Removal and reinstallation of the control circuit terminal block 121

5.2 Measurement of main circuit voltages, currents, and powers 123

5.2.1 Measurement of powers 125
5.2.2 Measurement of voltages 125

5.2.3 Measurement of currents 125
5.2.4 Measurement of inverter input power factor 125
5.2.5 Measurement of converter output voltage (across terminals P and N) 125
5.2.6 Measurement of inverter output frequency 125
5.2.7 Insulation resistance test using megger 126
5.2.8 Pressure test 126

6 SPECIFICATIONS 127

6.1 Inverter rating 128

6.2 Common specifications 129

6.3 Inverter outline dimension drawings 131

APPENDIX 135

Appendix 1 Differences and compatibility with the FR-A840 136
Appendix 2 Instructions for compliance with the EU Directives 137
Appendix 3 Instructions for UL and cUL 141
Appendix 4 Instructions for EAC 143
Appendix 5 Restricted Use of Hazardous Substances in Electronic and Electrical Products 144
Appendix 6 Referenced Standard (Requirement of Chinese standardized law) 144

1 INTRODUCTION

This contents described in this chapter must be read before using this product.
Always read the instructions before using the equipment.

1.1 Product checking and accessories.....8
1.2 Component names.....9
1.3 About the related manuals.....10

<Abbreviations>

Operation panel	Operation panel (FR-DU08-01) and LCD operation panel (FR-LU08-01)
Parameter unit	Parameter unit (FR-PU07)
DU	Operation panel (FR-DU08-01)
PU	Operation panel (FR-DU08-01) and parameter unit (FR-PU07)
Inverter	Mitsubishi Electric inverter FR-A800 series (IP55 compatible model)
Vector control compatible option	FR-A8AP/FR-A8AL/FR-A8APA/FR-A8APR/FR-A8APS (plug-in option), FR-A8TP (control terminal option)
Pr.	Parameter number (Number assigned to function)
PU operation	Operation using the PU (operation panel / parameter unit)
External operation	Operation using the control circuit signals
Combined operation	Combined operation using the PU (operation panel / parameter unit) and External operation
Mitsubishi Electric standard motor	SF-JR
Mitsubishi Electric constant-torque motor	SF-HRCA
Vector control dedicated motor	SF-V5RU
Mitsubishi Electric IPM motor	MM-CF

<Trademarks>

- MODBUS is a registered trademark of SCHNEIDER ELECTRIC USA, INC.
- Other company and product names herein are the trademarks and registered trademarks of their respective owners.

<Notes on descriptions in this Instruction Manual>

- Connection diagrams in this Instruction Manual suppose that the control logic of the input terminal is the sink logic, unless otherwise specified. (For the control logic, refer to page 38.)

Harmonic Suppression Guidelines
All the models of the inverters used by specific consumers are covered by "the Harmonic Suppression Guidelines for Consumers Who Receive High Voltage or Special High Voltage". (For details, refer to page 83.)

1.1 Product checking and accessories

Unpack the product and check the rating plate and the capacity plate of the inverter to ensure that the model agrees with the order and the product is intact.

● Inverter model

Symbol	Voltage class
4	400 V class

Symbol	Structure, functionality
6	IP55 compatible model

Symbol	Description
00023 to 03610	Inverter rated current (SLD rated current of the A800 standard model) (A)
0.4K to 132K	Inverter ND rated capacity (kW)

Symbol	Type*1
1	FM
2	CA

F R - A 8 4 6 - 00250 - 1 - 60 C3

Symbol	Circuit board coating*2	Plated conductor
60	With	Without
06	With	With

Symbol	EMC filter
C2	Built-in C2 filter
C3	Built-in C3 filter

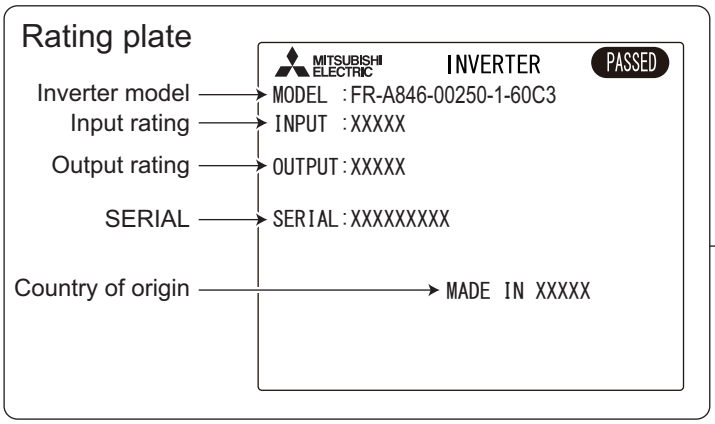

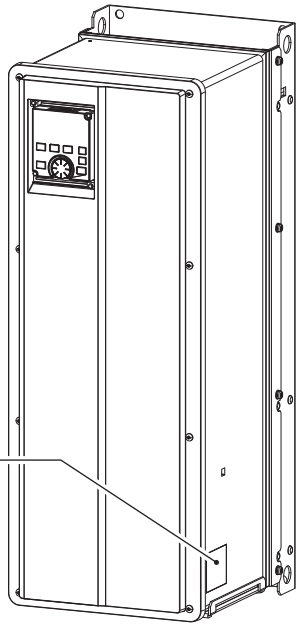

*1 Specification differs by the type. Major differences are shown in the table below.

Type	Monitor output	Initial setting			
		Built-in EMC filter	Control logic	Rated frequency	Pr.19 Base frequency voltage
FM (terminal FM equipped model)	Terminal FM (pulse train output) Terminal AM (analog voltage output (0 to ±10 VDC))	Built-in C2 filter: ON, Built-in C3 filter: OFF	Sink logic	60 Hz	9999 (same as the power supply voltage)
CA (terminal CA equipped model)	Terminal CA (analog current output (0 to 20 mADC)) Terminal AM (analog voltage output (0 to ±10 VDC))	ON	Source logic	50 Hz	8888 (95% of the power supply voltage)

*2 Conforming to IEC 60721-3-3 3C2/3S2

NOTE

- In this Instruction Manual, the inverter model name consists of the applicable motor capacity and the rated current value (SLD rated current value of the A800 standard model).
  (Example) FR-A846-00250(7.5K)

● How to read the SERIAL number

Rating plate example

□	○	○	○○○○○○
Symbol	Year	Month	Control number

SERIAL

The SERIAL consists of one symbol, two characters indicating the production year and month, and six characters indicating the control number. The last digit of the production year is indicated as the Year, and the Month is indicated by 1 to 9, X (October), Y (November), or Z (December).

1.2 Component names

Component names are shown below. (Example: FR-A846-00250(7.5K))

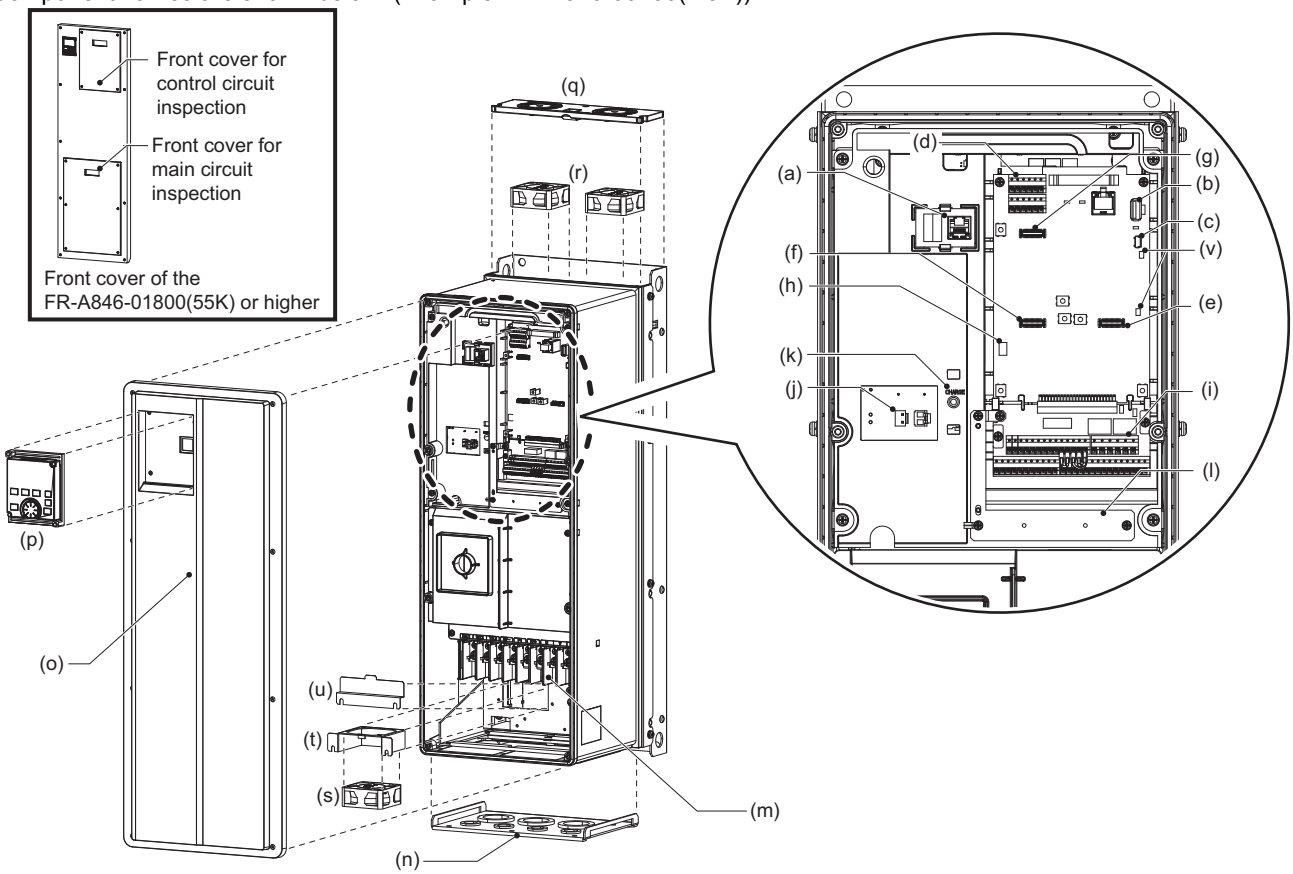

Symbol	Name	Description	Refer to page
(a)	PU connector	Connects the operation panel or the parameter unit. This connector also enables the RS-485 communication.	50
(b)	USB A connector	Connects a USB memory device.	51
(c)	USB mini B connector	Connects a personal computer and enables communication with FR Configurator 2.	51
(d)	RS-485 terminals	Enables RS-485, MODBUS RTU communication.	53
(e)	Plug-in option connector 1	Connects a plug-in option or a communication option.	Instruction Manual of the option
(f)	Plug-in option connector 2		
(g)	Plug-in option connector 3		
(h)	Voltage/current input switch	Selects between voltage and current for the terminal 2 and 4 inputs.	*1
(i)	Control circuit terminal block	Connects cables for the control circuit.	34
(j)	EMC filter ON/OFF connector	Turns ON/OFF the EMC filter.	80
(k)	Charge lamp	Stays ON while the power is supplied to the main circuit.	26
(l)	Metal fitting for earthing (grounding)	Earths (grounds) the shielded wires of the encoder cable, etc.	59
(m)	Main circuit terminal block	Connects cables for the main circuit.	26
(n)	Wiring cover	Remove the protective bushes to connect cables. (FR-A846-00470(18.5K) or lower)	15
(o)	Front cover	Remove this cover for the installation of the product, installation of a plug-in (communication) option, RS-485 terminal wiring, switching of the voltage/current input switch, etc. For the FR-A846-01800(55K) or higher, the front cover for the control circuit inspection and the front cover for the main circuit inspection can be individually removed.	15
(p)	Operation panel (FR-DU08-01)	Operates and monitors the inverter.	48
(q)	Fan cover	Remove this cover for replacement of the cooling fan. (FR-A846-00250(7.5K) or higher)	103
(r)	Cooling fan	Cools the inverter. (FR-A846-00250(7.5K) or higher)	103
(s)	Internal fan	Cools the inverter.	109
(t)	Bracket	Fixes the internal fan.	109
(u)	Protective cover	Protects the fan to avoid contacting the wiring. (FR-A846-00250(7.5K) to 00470(18.5K))	110
(v)	Switches (SW3 and SW4) for manufacturer setting	Do not change the initial setting (OFF OFF ON).	—

*1 Refer to the Instruction Manual (Detailed)

1.3 About the related manuals

The manuals related to FR-A806 are shown below.

Manual name	Manual number
FR-A800 Instruction Manual (Detailed)	IB-0600503ENG
FR Configurator 2 Instruction Manual	IB-0600516ENG
FR-A800/F800 PLC function programming manual	IB-0600492ENG
Safety stop function instruction manual	BCN-A23228-001

2 INSTALLATION AND WIRING

This chapter explains the "INSTALLATION" and the "WIRING" of this product.
Always read the instructions before using the equipment.

2.1 Peripheral devices 12
2.2 Removal and reinstallation of the front cover 15
2.3 Installation of the inverter 18
2.4 Terminal connection diagrams 22
2.5 Main circuit terminals 26
2.6 Control circuit 34
2.7 Operation panel (FR-DU08-01) 47
2.8 Communication connectors and terminals 50
2.9 Connection of motor with encoder (vector control) 54
2.10 Parameter settings for a motor with encoder 60
2.11 Connection of stand-alone option units 63

2.1 Peripheral devices

2.1.1 Inverter and peripheral devices

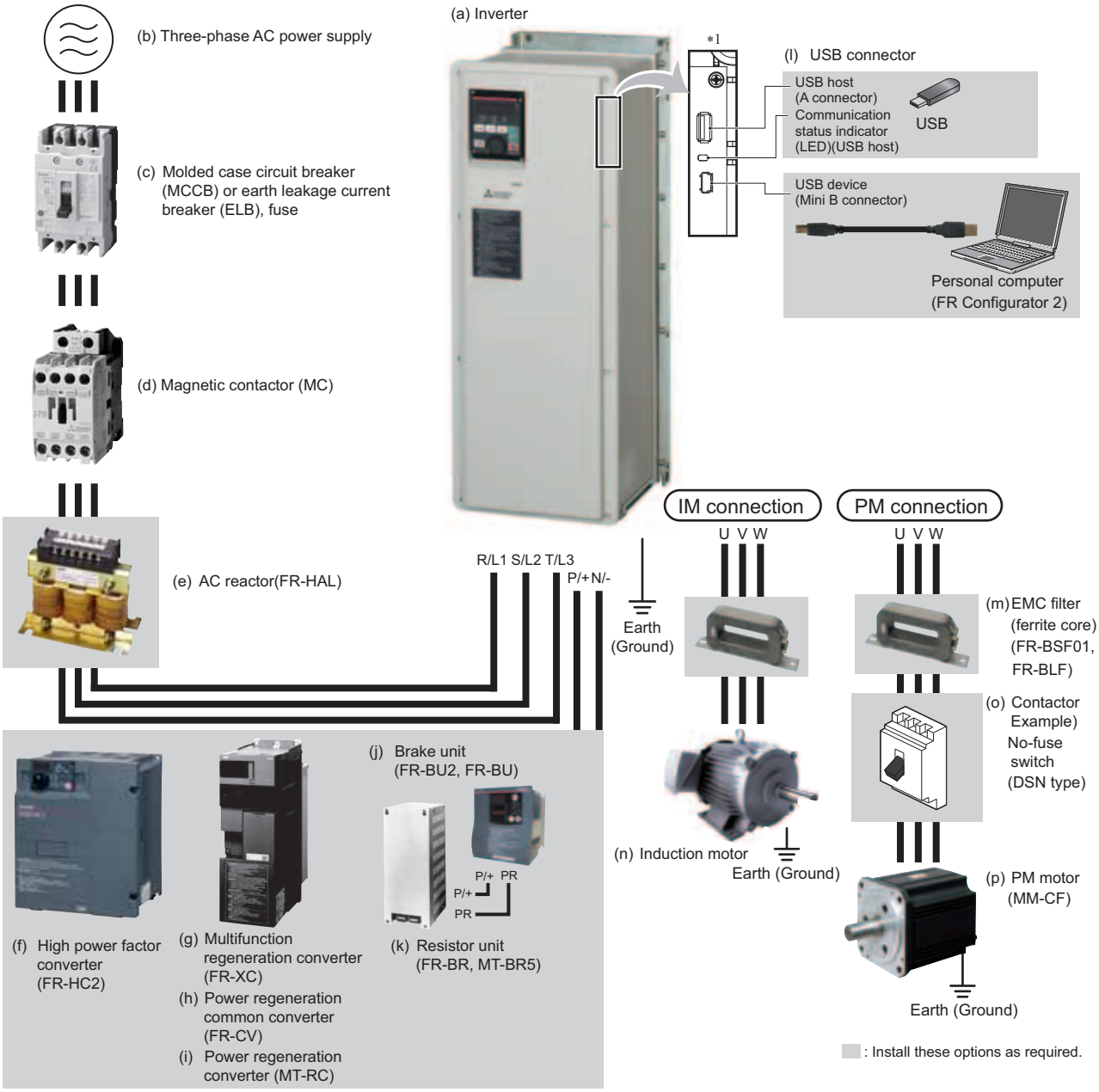

*1 The figure shows the area when the front cover is removed.

NOTE

- To prevent an electric shock, always earth (ground) the motor and inverter.
- Do not install a power factor correction capacitor or surge suppressor or capacitor type filter on the inverter's output side. Doing so will cause the inverter to trip or the capacitor and surge suppressor to be damaged. If any of the above devices is connected, immediately remove it. When installing a molded case circuit breaker on the output side of the inverter, contact the manufacturer of the molded case circuit breaker.
- Electromagnetic wave interference
  The input/output (main circuit) of the inverter includes high frequency components, which may interfere with the communication devices (such as AM radios) used near the inverter. In this case, activating the EMC filter may minimize interference. (Refer to page 80.)
- For details of options and peripheral devices, refer to the respective Instruction Manual.
- A PM motor cannot be driven by the commercial power supply.
- A PM motor is a motor with permanent magnets embedded inside. High voltage is generated at the motor terminals while the motor is running. Before closing the contactor at the output side, make sure that the inverter power is ON and the motor is stopped.

Symbol	Name	Overview	Refer to page
(a)	Inverter (FR-A806)	The life of the inverter is influenced by the ambient temperature. The ambient temperature should be as low as possible within the permissible range. Incorrect wiring may lead to damage of the inverter. The control signal lines must be kept fully away from the main circuit lines to protect them from noise. The built-in EMC filter can reduce the noise. In this inverter, a DC reactor and common mode choke are built in to suppress harmonics and to improve the power factor.	18 22 80
(b)	Three-phase AC power supply	Must be within the permissible power supply specifications of the inverter.	128
(c)	Molded case circuit breaker (MCCB), earth leakage circuit breaker (ELB), or fuse	Must be selected carefully since an inrush current flows in the inverter at power ON.	14
(d)	Magnetic contactor (MC)	Install this to ensure safety. Do not use this to start and stop the inverter. Doing so will shorten the life of the inverter.	86
(e)	AC reactor (FR-HAL)	Install this to suppress harmonics and to improve the power factor. An AC reactor (FR-HAL) (option) is required when installing the inverter near a large power supply system (1000 kVA or more). Under such condition, the inverter may be damaged if you do not use a reactor. Select a reactor according to the applied motor capacity.	85
(f)	High power factor converter (FR-HC2)	Suppresses the power supply harmonics significantly. Install this as required.	67
(g)	Multifunction regeneration converter (FR-XC)*1	Provides a large braking capability. Install this as required.	68
(h)	Power regeneration common converter (FR-CV)*1		72
(i)	Power regeneration converter (MT-RC)*1		73
(j)	Brake unit (FR-BU2, FR-BU, BU)*1	Allows the inverter to provide the optimal regenerative braking capability. Install this as required.	63
(k)	Resistor unit (FR-BR, MT-BR5)*1		
(l)	USB connection	A USB (Ver. 1.1) cable connects the inverter with a personal computer. A USB memory device enables parameter copies and the trace function.	51
(m)	Noise filter (FR-BSF01, FR-BLF)	Install this to reduce the electromagnetic noise generated from the inverter. The noise filter is effective in the range from about 0.5 MHz to 5 MHz. A wire should be wound four turns at maximum.	78
(n)	Induction motor	Connect a squirrel-cage induction motor.	—
(o)	Contactor Example) No-fuse switch (DSN type)	Connect this for an application where a PM motor is driven by the load even while the inverter power is OFF. Do not open or close the contactor while the inverter is running (outputting).	—
(p)	PM motor	When PM sensorless vector control is selected, a PM motor can be driven.	—

*1 For stand-alone option selection, refer to the Instruction Manual of each option.

2.1.2 Peripheral devices

Check the model of the inverter you purchased. Appropriate peripheral devices must be selected according to the capacity. Refer to the table below to prepare appropriate peripheral devices.

Motor output (kW)	Applicable inverter model *1	Molded case circuit breaker (MCCB) *1*2 or earth leakage circuit breaker (ELB) (NF, NV type)	Input-side magnetic contactor *1*3
0.4	FR-A846-00023(0.4K)	5 A	S-T10
0.75	FR-A846-00038(0.75K)	5 A	S-T10
1.5	FR-A846-00052(1.5K)	10 A	S-T10
2.2	FR-A846-00083(2.2K)	10 A	S-T10
3.7	FR-A846-00126(3.7K)	15 A	S-T10
5.5	FR-A846-00170(5.5K)	20 A	S-T12
7.5	FR-A846-00250(7.5K)	30 A	S-T21
11	FR-A846-00310(11K)	40 A	S-T21
15	FR-A846-00380(15K)	50 A	S-T21
18.5	FR-A846-00470(18.5K)	60 A	S-T35
22	FR-A846-00620(22K)	75 A	S-T35
30	FR-A846-00770(30K)	100 A	S-T50
37	FR-A846-00930(37K)	100 A	S-T50
45	FR-A846-01160(45K)	125 A	S-T65
55	FR-A846-01800(55K)	150 A	S-T100
75	FR-A846-02160(75K)	200 A	S-T100
90	FR-A846-02600(90K)	225 A	S-N150
110	FR-A846-03250(110K)	225 A	S-N180
132	FR-A846-03610(132K)	350 A	S-N220

*1 Assumes the use of a Mitsubishi Electric 4-pole standard motor with the power supply voltage of 400 VAC 50 Hz.

*2 Select an MCCB according to the power supply capacity.
Install one MCCB per inverter.
For the use in the United States or Canada, refer to page 141, and select the appropriate fuse.

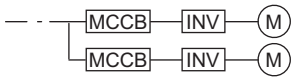

*3 Magnetic contactor is selected based on the AC-1 class. The electrical durability of magnetic contactor is 500,000 times. When the magnetic contactor is used for emergency stops during motor driving, the electrical durability is 25 times.
If using an MC for emergency stop during motor driving, select an MC regarding the inverter input side current as JEM 1038-AC-3 class rated current. When providing an MC on the inverter output side for switching to commercial power supply during general-purpose motor operation, select an MC regarding the rated motor current as JEM 1038-AC-3 class rated current.

NOTE

- When the inverter capacity is larger than the motor capacity, select an MCCB and a magnetic contactor according to the inverter model, and select cables and reactors according to the motor output.
- When the breaker on the inverter's input side trips, check for the wiring fault (short circuit), damage to internal parts of the inverter etc. The cause of the trip must be identified and removed before turning ON the power of the breaker.

2.2 Removal and reinstallation of the front cover

◆Removal of the front cover

- Remove the front cover installation screws to remove the front cover. (For the FR-A846-00620(22K) to 01160(45K), remove the operation panel before removing the front cover.)

Inverter	Screw type	Screw size	Screwdriver size
FR-A846-00470(18.5K) or lower	Hexalobular screw	M4	T20
FR-A846-00620(22K) or higher		M5	T25

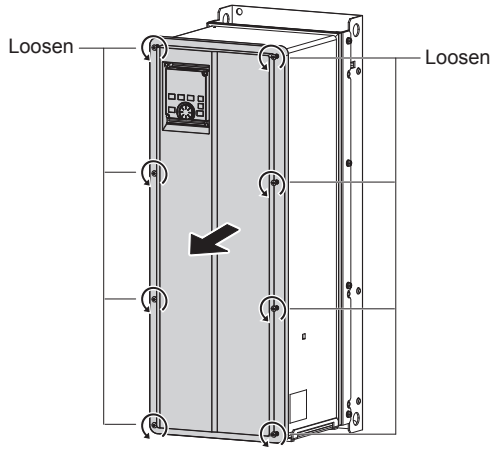

◆Reinstallation of the front cover

- Fix the front cover with the front cover installation screws. (For the FR-A846-00620(22K) to 01160(45K), install the front cover while the operation panel is removed.)

Inverter	Tightening torque
FR-A846-00470(18.5K) or lower	1.4 to 1.9 N·m
FR-A846-00620(22K) or higher	2.8 to 3.6 N·m

Tighten the front cover installation screws in the numerical order in the figure shown below.

FR-A846-00023(0.4K) to 00170(5.5K), FR-A846-00620(22K) to 01160(45K)	FR-A846-00250(7.5K) to 00470(18.5K)	FR-A846-01800(55K) to 03610(132K)
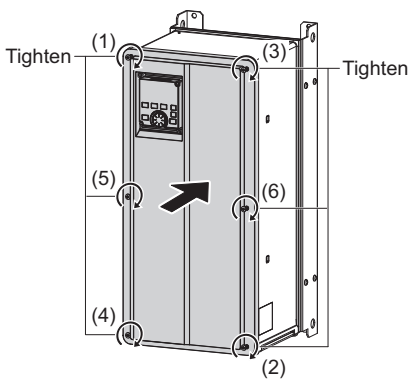	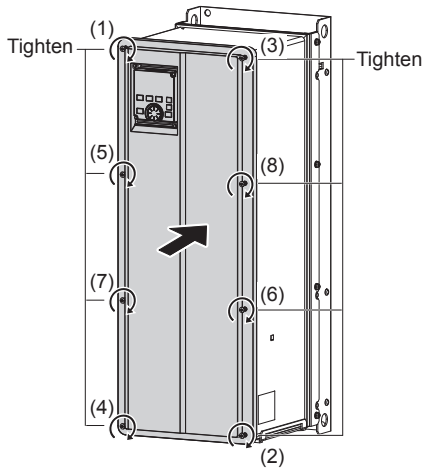	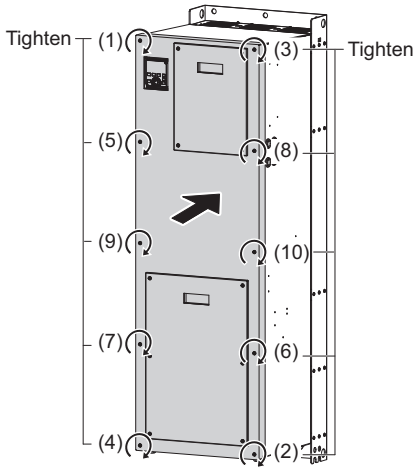

◆Removal of the front cover for control circuit inspection and the front cover for main circuit inspection (FR-A846-01800(55K) or higher)

- Remove the installation screws to remove the front cover for control circuit inspection and/or the front cover for main circuit inspection.

Front cover	Screw type	Screw size	Screwdriver size
For control circuit inspection	Hexalobular screw	M5	T25
For main circuit inspection			

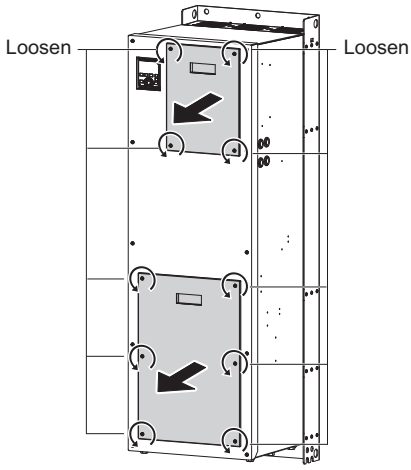

◆Installation of the front cover for control circuit inspection and the front cover for main circuit inspection (FR-A846-01800(55K) or higher)

- Fix the covers with the installation screws.

Front cover	Tightening torque
For control circuit inspection	2.8 to 3.6 N·m
For main circuit inspection	

To install the front cover for control circuit inspection and/or the front cover for main circuit inspection, tighten the installation screws in the numerical order in the figure shown below.

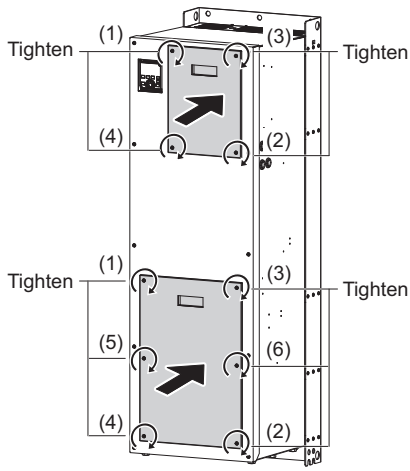

NOTE

- When installing the front cover for the FR-A846-00470(18.5K) or lower, fit the connector of the operation panel securely along the guides of the PU connector. Otherwise, the operation panel connection connector or the PU connector may be damaged.
- For the FR-A846-00620(22K) to 03610(132K), before removing/installing the front cover, always remove the operation panel. Otherwise, the operation panel connection connector or the PU connector may be damaged.
- When removing/installing the front cover of the FR-A846-00620(22K) to 01160(45K), always hold the front cover at the flange sections. Otherwise, the front cover may fall off, resulting in damage or injuries.

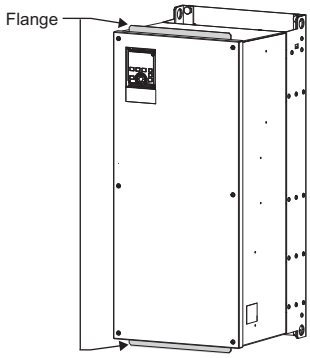

- Before installing the front cover, check the waterproof gasket to make sure that it is not damaged. If it is damaged, contact the nearest Mitsubishi FA center.
- Securely install the front cover to fit the waterproof gasket closely. Do not let the waterproof gasket get stuck between the front cover edge and the inverter. Otherwise, water may get into the inverter. Also, do not let any foreign matter get stuck between the waterproof gasket and the front cover.
- Keep the waterproof gasket of the inverter clean. Otherwise, water may get into the inverter. If there is any dirt on the gasket, make sure to remove it.
- Fully make sure that the front cover is installed securely. Always tighten the mounting screws of the front cover.

2.3 Installation of the inverter

An inverter unit uses many semiconductor devices. To ensure higher reliability and long period of operation, operate the inverter in the ambient environment that completely satisfies the equipment specifications.

2.3.1 Inverter installation environment

The following table lists the standard specifications of the inverter installation environment. Using the inverter in an environment that does not satisfy the conditions deteriorates the performance, shortens the life, and causes a failure. Refer to the following points, and take adequate measures.

◆Standard environmental specifications of the inverter

Item	Description	
Ambient temperature	-10 to +40°C (non-freezing)	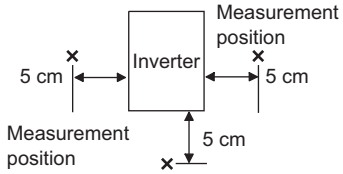
Ambient humidity	95% RH or less (non-condensing)	
Storage temperature	-20 to +65°C*1	
Atmosphere	Indoors (free from corrosive gas, flammable gas, oil mist, dust and dirt)	
Altitude	Maximum 2500 m*2	
Vibration	5.9 m/s^2*3 or less at 10 to 55 Hz (in X, Y, and Z directions)	

*1 Temperature applicable for a short time, e.g. in transit.
*2 For installation at an altitude above 1000 m, consider a 3% reduction in the rated current per 500 m increase in altitude.
*3 2.9 m/s^2 or less for the FR-A846-01800(55K) or higher.

◆Temperature

The permissible ambient temperature of the inverter is between -10°C and +40°C. Always operate the inverter within this temperature range. Operation outside this range will considerably shorten the service lives of the semiconductors, parts, capacitors and others. Take the following measures to keep the ambient temperature of the inverter within the specified range.

(a) Measures against high temperature
- Ventilate the room.
- Install the inverter in an air-conditioned electric chamber.
- Block direct sunlight.
- Provide a shield or similar plate to avoid direct exposure to the radiated heat and wind of a heat source.
- Ventilate the area around the inverter well.

(b) Measures against low temperature
- Provide a heater around the inverter.
- Do not power OFF the inverter. (Keep the start signal of the inverter OFF.)

(c) Sudden temperature changes
- Select an installation place where temperature does not change suddenly.
- Avoid installing the inverter near the air outlet of an air conditioner.
- If temperature changes are caused by opening/closing of a door, install the inverter away from the door.

NOTE
- For the amount of heat generated by the inverter unit, refer to page 20.

◆Humidity

Operate the inverter within the ambient air humidity of usually 45 to 90%. Too high humidity will pose problems of reduced insulation and metal corrosion. On the other hand, too low humidity may cause a spatial electrical breakdown.
The insulation distance defined in JEM 1103 "Control Equipment Insulator" is humidity of 45 to 85%.
(a) Measures against high humidity
- Provide dry air into the room from outside.
- Use a dehumidifier.

(b) Measures against low humidity
Air with proper humidity can be blown into the room from outside. Also when installing or inspecting the unit, discharge your body (static electricity) beforehand, and keep your body away from the parts and patterns.
(c) Measures against condensation
Condensation may occur if frequent operation stops change the in-room temperature suddenly or if the outside air temperature changes suddenly.
Condensation causes such faults as reduced insulation and corrosion.
- Take the measures against high humidity in (a).
- Do not power OFF the inverter. (Keep the start signal of the inverter OFF.)

◆Dust, dirt, oil mist

Dust and dirt will cause faults such as poor contacts, reduction in insulation and cooling effect due to accumulation of moisture-absorbed dust and dirt, and equipment internal temperature rise due to a clogged ventilation filter in the room where the equipment is installed. In an atmosphere where conductive powder floats, dust and dirt will cause such faults as malfunction, deteriorated insulation and short circuit in a short time.
Since oil mist will cause similar conditions, it is necessary to take adequate measures.

Countermeasure
- Purge air.
  Pump clean air from outside to make the in-enclosure air pressure higher than the outside air pressure.

◆Corrosive gas, salt damage

If the inverter is exposed to corrosive gas or to salt near a beach, the printed board patterns and parts will corrode or the relays and switches will result in poor contact.
In such a place, take the countermeasures described in "Dust, dirt, oil mist" above.

◆Explosive, flammable gases

As the inverter is non-explosion proof, it must be contained in an explosion-proof enclosure. In places where explosion may be caused by explosive gas, dust or dirt, an enclosure cannot be used unless it structurally complies with the guidelines and has passed the specified tests. This makes the enclosure itself expensive (including the test charges). The best way is to avoid installation in such places and install the inverter in a non-hazardous place.

◆High altitude

Use the inverter at an altitude of within 2500 m. For use at an altitude above 1000 m, consider a 3% reduction in the rated current per 500 m increase in altitude.
If it is used at a higher place, it is likely that thin air will reduce the cooling effect and low air pressure will deteriorate dielectric strength.

◆Vibration, impact

The vibration resistance of the inverter is up to 5.9 m/s^2 (2.9 m/s^2 or less for the FR-A846-01800(55K) or higher) at 10 to 55 Hz frequency and 1 mm amplitude for the directions of X, Y, Z axes. Applying vibration and impacts for a long time may loosen the structures and cause poor contacts of connectors, even if those vibration and impacts are within the specified values. Especially when impacts are applied repeatedly, caution must be taken because such impacts may break the installation feet.

Countermeasure
- Strengthen the structure to prevent the installation surface from resonance.
- Install the inverter away from the sources of the vibration.

2.3.2 Amount of heat generated by the inverter

◆Installing the heat sink inside the enclosure

When the heat sink is installed inside the enclosure, the amount of heat generated by the inverter unit is shown in the following tables.

Inverter FR-A846-[]	Amount of heat generated (W)	
	LD	ND
00023(0.4K)	50	40
00038(0.75K)	70	55
00052(1.5K)	80	70
00083(2.2K)	120	100
00126(3.7K)	160	130
00170(5.5K)	230	170
00250(7.5K)	325	230
00310(11K)	370	295
00380(15K)	440	400
00470(18.5K)	530	460
00620(22K)	700	545
00770(30K)	840	705
00930(37K)	1060	880
01160(45K)	1260	1060
01800(55K)	1750	1300
02160(75K)	2210	1800
02600(90K)	2700	2250
03250(110K)	2900	2400
03610(132K)	3700	2900

NOTE

- The amount of heat generated shown assumes that the output current is the inverter rated current, and the carrier frequency is 2 kHz.

2.3.3 Inverter installation

◆Inverter placement

- Install the inverter on a strong flat surface securely with screws.

Fix six positions for the FR-A846-01800(55K) or higher.

- Leave enough clearances and take cooling measures.
- Avoid places where the inverter is subjected to direct sunlight, high temperature and high humidity.
- Install the inverter on a nonflammable wall surface.
- For heat dissipation and maintenance, keep clearance between the inverter and the other devices. The clearance below the inverter is required as a wiring space, and the clearance above the inverter is required as a heat dissipation space.
- When designing or building an enclosure for the inverter, carefully consider influencing factors such as heat generation of the contained devices and the operating environment.

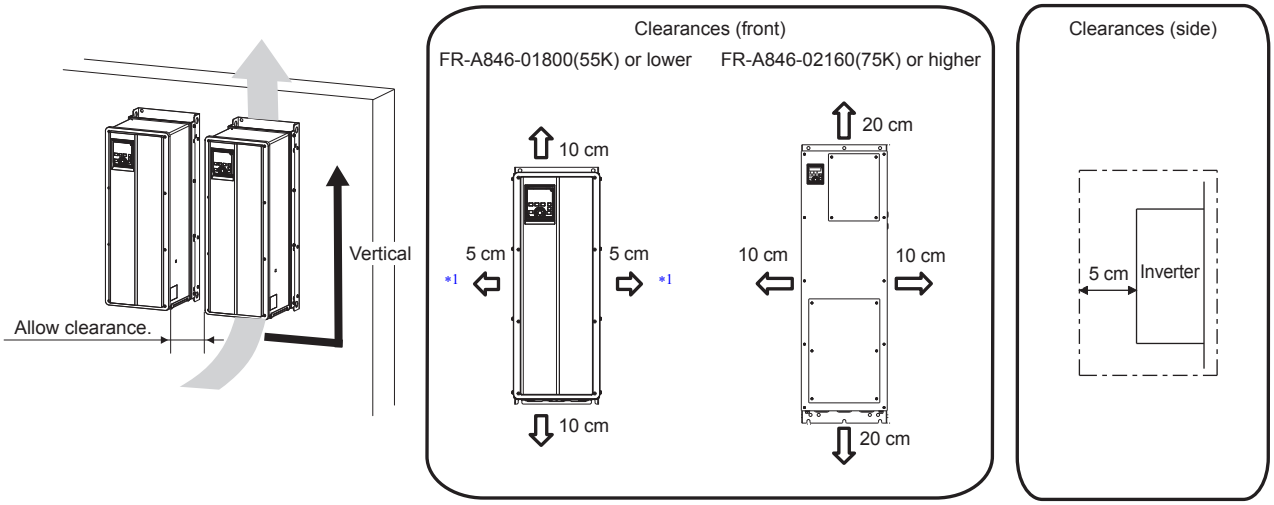

*1 For the FR-A846-00126(3.7K) or lower, allow 1 cm or more clearance.

◆ Installation orientation of the inverter

Install the inverter on a wall as specified. Do not mount it horizontally or in any other way.

◆Above the inverter

Heat is blown up from inside the inverter by the small fan built in the unit. Any equipment placed above the inverter should be heat resistant.

2.4 Terminal connection diagrams

◆FM type

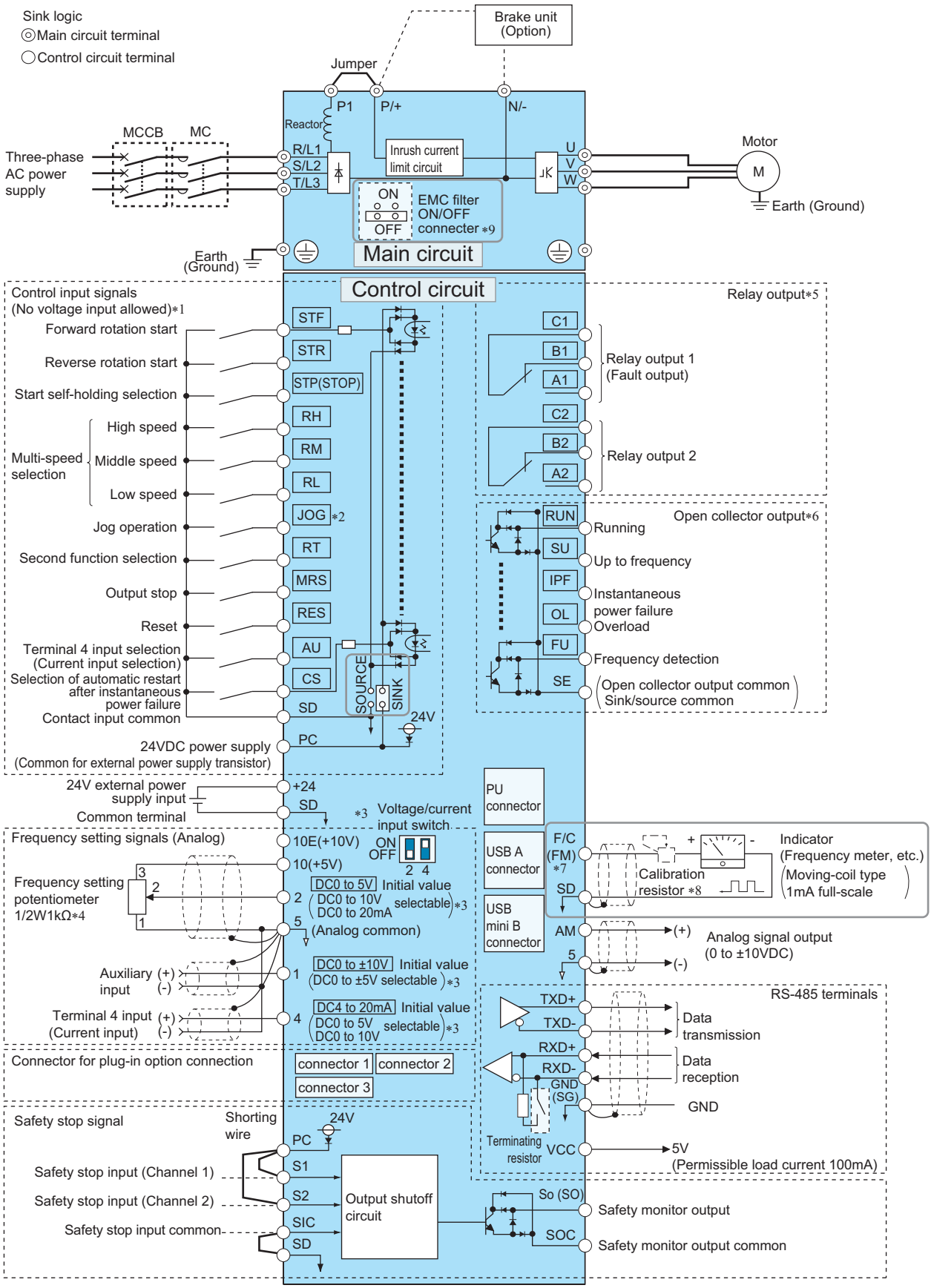

*1 The function of these terminals can be changed with the input terminal assignment **(Pr.178 to Pr.189)**. (Refer to the Instruction Manual (Detailed).)

*2 Terminal JOG is also used as a pulse train input terminal. Use **Pr.291** to choose JOG or pulse.

*3 Terminal input specifications can be changed by analog input specification switchover **(Pr.73, Pr.267)**. To input a voltage, set the voltage/current input switch OFF. To input a current, set the voltage/current input switch ON. Terminals 10 and 2 are also used as a PTC input terminal. **(Pr.561)** (Refer to the Instruction Manual (Detailed).)

*4 It is recommended to use 2 W 1 kΩ when the frequency setting signal is changed frequently.

*5 The function of these terminals can be changed with the output terminal assignment **(Pr.195, Pr.196)**. (Refer to the Instruction Manual (Detailed).)

*6 The function of these terminals can be changed with the output terminal assignment **(Pr.190 to Pr.194)**. (Refer to the Instruction Manual (Detailed).)

*7 The terminal FM can be used to output pulse trains as open collector output by setting **Pr.291**.

*8 Not required when calibrating the scale with the operation panel.

*9 Do not change the initially set ON (enabled) position of the EMC filter ON/OFF connector in the case of the inverter with a built-in C2 filter. The Class C2 compatibility condition is not satisfied with the EMC filter OFF. The FR-A846-00250(7.5K)-C2 to FR-A846-00470(18.5K)-C2 are not provided with the EMC filter ON/OFF connector. The EMC filter is always ON.

NOTE

- To prevent a malfunction due to noise, keep the signal cables 10 cm or more away from the power cables. Also, separate the main circuit cables at the input side from the main circuit cables at the output side.
- After wiring, wire offcuts must not be left in the inverter.
  Wire offcuts can cause an alarm, failure or malfunction. Always keep the inverter clean.
  When drilling mounting holes in a wall or the side of the enclosure etc., take caution not to allow chips and other foreign matters to enter the inverter.
- Set the voltage/current input switch correctly. Incorrect setting may cause a fault, failure or malfunction.

◆CA type

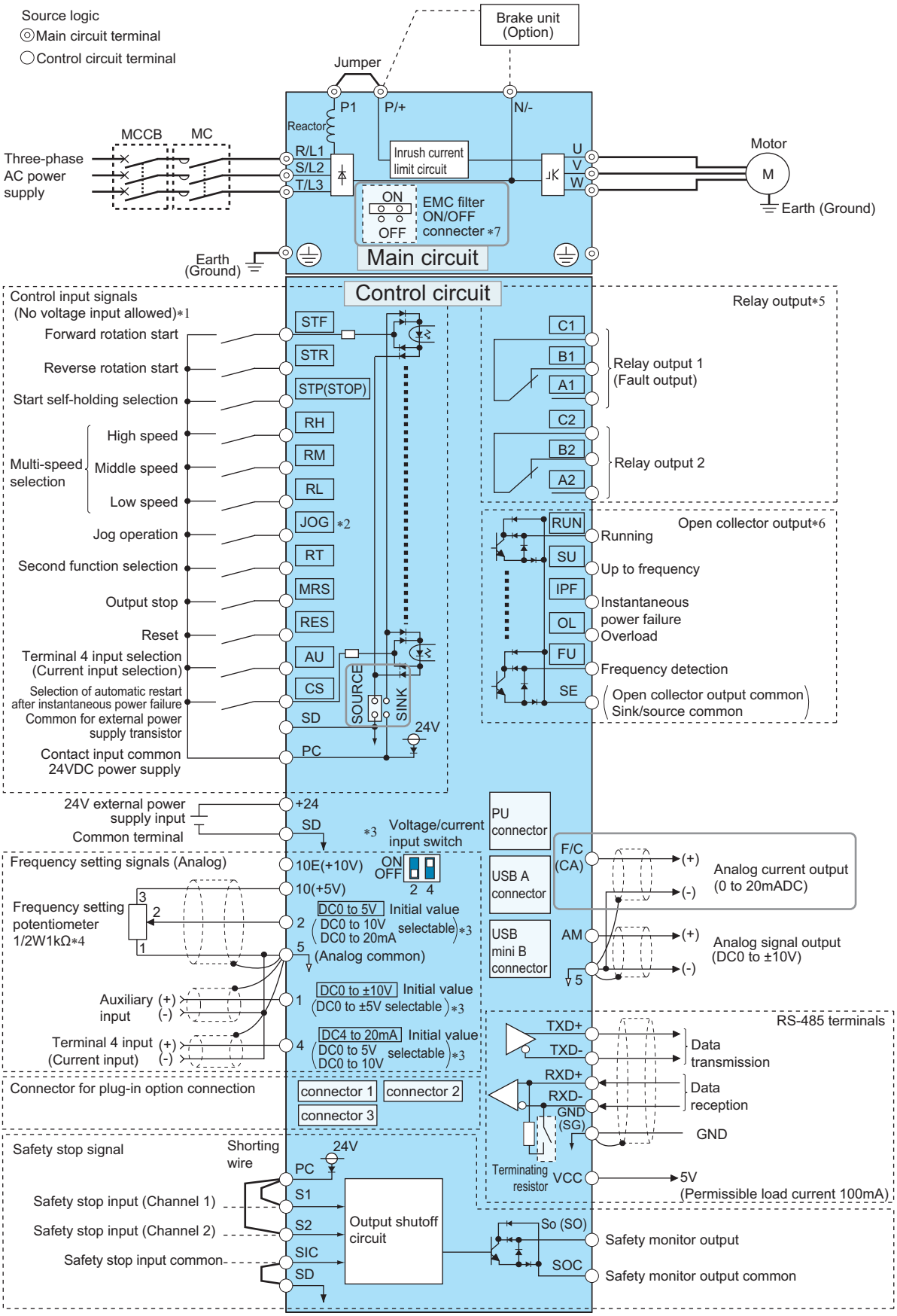
Source logic
◎Main circuit terminal
○Control circuit terminal
Brake unit (Option)
Jumper
P1
P/+
N/-
Reactor
MCCB
MC
Three-phase AC power supply
R/L1
S/L2
T/L3
Inrush current limit circuit
U
V
W
Motor
M
Earth (Ground)
ON
OFF
EMC filter ON/OFF connecter *7
Main circuit
Earth (Ground)
Control circuit
Control input signals (No voltage input allowed)*1
Forward rotation start
Reverse rotation start
Start self-holding selection
Multi-speed selection
High speed
Middle speed
Low speed
Jog operation
Second function selection
Output stop
Reset
Terminal 4 input selection (Current input selection)
Selection of automatic restart after instantaneous power failure
Common for external power supply transistor
Contact input common 24VDC power supply
STF
STR
STP(STOP)
RH
RM
RL
JOG *2
RT
MRS
RES
AU
CS
SD
PC
SOURCE
SINK
24V
Relay output*5
C1
B1
A1
Relay output 1 (Fault output)
C2
B2
A2
Relay output 2
Open collector output*6
RUN
Running
SU
Up to frequency
IPF
Instantaneous power failure
OL
Overload
FU
Frequency detection
SE
Open collector output common Sink/source common
24V external power supply input
Common terminal
+24
SD
*3 Voltage/current input switch
ON
OFF
2 4
PU connector
USB A connector
USB mini B connector
F/C (CA)
(+)
(-)
Analog current output (0 to 20mADC)
AM
5
Analog signal output (DC0 to ±10V)
Frequency setting signals (Analog)
10E(+10V)
10(+5V)
Frequency setting potentiometer 1/2W1kΩ*4
DC0 to 5V
Initial value
DC0 to 10V
DC0 to 20mA
selectable *3
(Analog common)
DC0 to ±10V
Initial value
(DC0 to ±5V selectable *3
Auxiliary input
Terminal 4 input (Current input)
DC4 to 20mA
Initial value
DC0 to 5V
DC0 to 10V
selectable *3
RS-485 terminals
TXD+
TXD-
Data transmission
RXD+
RXD-
Data reception
GND (SG)
GND
Terminating resistor
VCC
5V (Permissible load current 100mA)
Connector for plug-in option connection
connector 1
connector 2
connector 3
Safety stop signal
Shorting wire
24V
PC
S1
S2
SIC
SD
Safety stop input (Channel 1)
Safety stop input (Channel 2)
Safety stop input common
Output shutoff circuit
So (SO)
SOC
Safety monitor output
Safety monitor output common

*1 The function of these terminals can be changed with the input terminal assignment **(Pr.178 to Pr.189)**. (Refer to the Instruction Manual (Detailed).)

*2 Terminal JOG is also used as a pulse train input terminal. Use **Pr.291** to choose JOG or pulse.

*3 Terminal input specifications can be changed by analog input specification switchover **(Pr.73, Pr.267)**. To input a voltage, set the voltage/current input switch OFF. To input a current, set the voltage/current input switch ON. Terminals 10 and 2 are also used as a PTC input terminal. **(Pr.561)** (Refer to the Instruction Manual (Detailed).)

*4 It is recommended to use 2 W 1 kΩ when the frequency setting signal is changed frequently.

*5 The function of these terminals can be changed with the output terminal assignment **(Pr.195, Pr.196)**. (Refer to the Instruction Manual (Detailed).)

*6 The function of these terminals can be changed with the output terminal assignment **(Pr.190 to Pr.194)**. (Refer to the Instruction Manual (Detailed).)

*7 Do not change the initially set ON (enabled) position of the EMC filter ON/OFF connector in the case of the inverter with a built-in C2 filter. The Class C2 compatibility condition is not satisfied with the EMC filter OFF. The FR-A846-00250(7.5K)-C2 to FR-A846-00470(18.5K)-C2 are not provided with the EMC filter ON/OFF connector. The EMC filter is always ON.

NOTE

- To prevent a malfunction due to noise, keep the signal cables 10 cm or more away from the power cables. Also, separate the main circuit cables at the input side from the main circuit cables at the output side.
- After wiring, wire offcuts must not be left in the inverter.
  Wire offcuts can cause an alarm, failure or malfunction. Always keep the inverter clean.
  When drilling mounting holes in a wall or the side of the enclosure etc., take caution not to allow chips and other foreign matters to enter the inverter.
- Set the voltage/current input switch correctly. Incorrect setting may cause a fault, failure or malfunction.

2.5 Main circuit terminals

2.5.1 Details on the main circuit terminals

Terminal symbol	Terminal name	Terminal function description	Refer to page
R/L1, S/L2, T/L3	AC power input	Connect these terminals to the commercial power supply. Do not connect anything to these terminals when using the high power factor converter (FR-HC2), multifunction regeneration converter (FR-XC)*1, or the power regeneration common converter (FR-CV).	—
U, V, W	Inverter output	Connect these terminals to a three-phase squirrel cage motor or a PM motor.	—
P/+, N/-	Brake unit connection	Connect the brake unit (FR-BU2, FR-BU, BU), power regeneration common converter (FR-CV), power regeneration converter (MT-RC), high power factor converter (FR-HC2), multifunction regeneration converter (FR-XC), or DC power supply (under DC feeding mode).	63
P/+, P1	—	Do not remove the jumper across terminals P/+ and P1 except for connecting the power regeneration common converter (FR-CV), multifunction regeneration converter (FR-XC)*1, or the high power factor converter (FR-HC2).	—
⏚	Earth (ground)	For earthing (grounding) the inverter chassis. This must be earthed (grounded).	33

*1 Available when used in the common bus regeneration mode

2.5.2 Terminal layout of the main circuit terminals, wiring of power supply and the motor

FR-A846-00023(0.4K) to FR-A846-00170(5.5K)

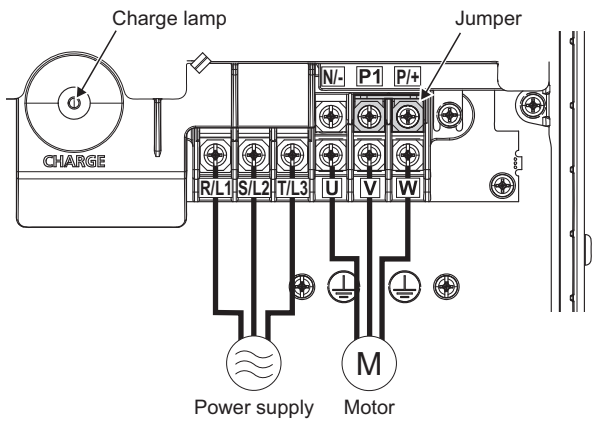

FR-A846-00250(7.5K) to FR-A846-00470(18.5K)

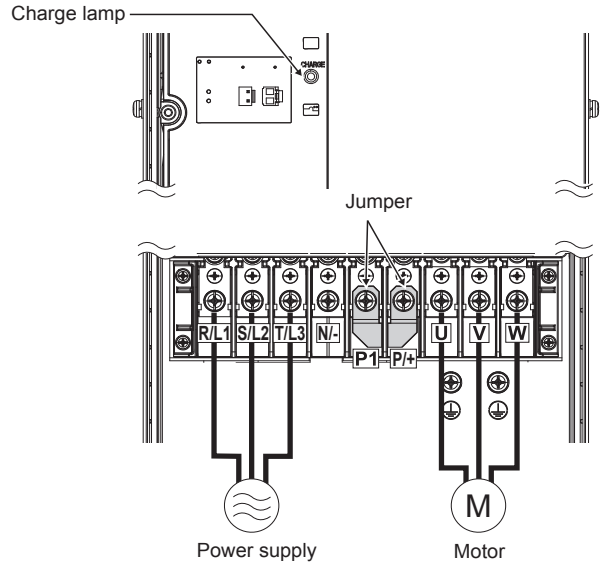

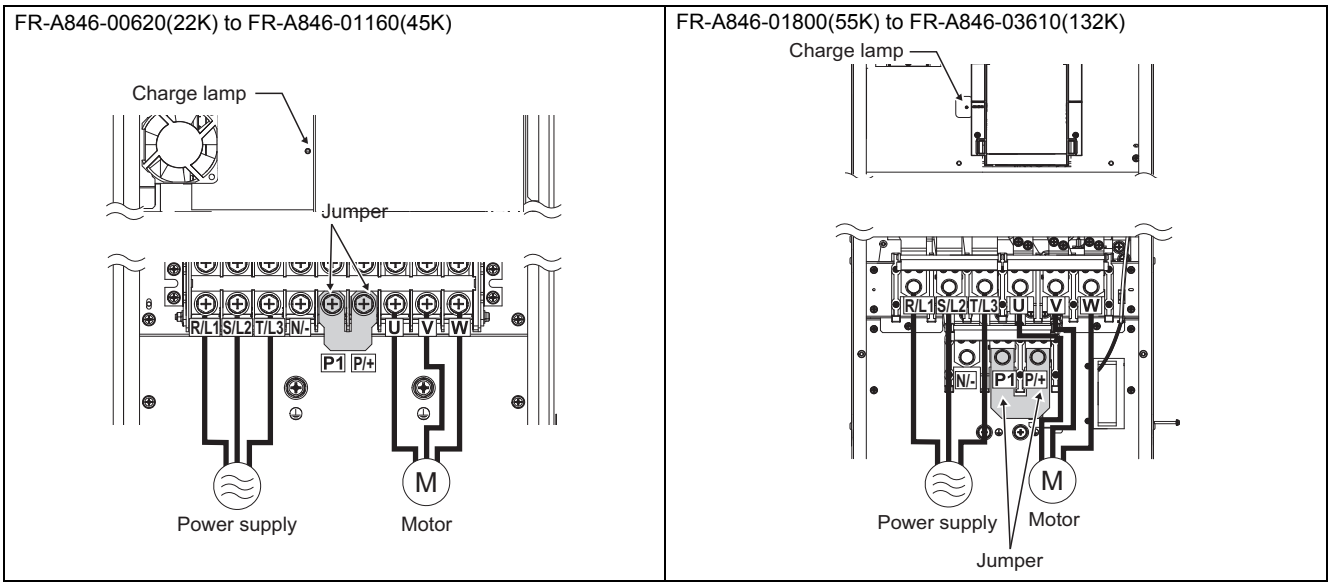

NOTE

- Make sure the power cables are connected to the R/L1, S/L2, and T/L3. (Phase need not be matched.) Never connect the power cable to the U, V, and W of the inverter. Doing so will damage the inverter.
- Connect the motor to U, V, and W. The phase need to be matched.

2.5.3 Wiring method

(1) Remove the front cover of the inverter. (Refer to page 15)

(2) For the FR-A846-00470(18.5K) or lower, remove the wiring cover installation screws (hexalobular screws, screw size: M5, screwdriver size: T25, tightening torque: 2.8 to 3.6 N·m) to remove the wiring cover.

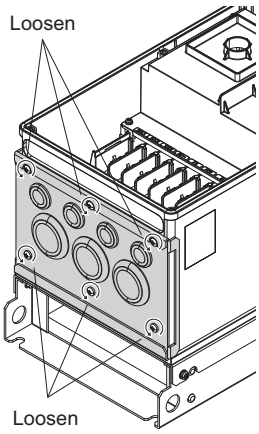

Example of the FR-A846-00250(7.5K)

(3) For the FR-A846-00470(18.5K) or lower, remove the protective bushes from the wiring cover.
For the FR-A846-00620(22K) to FR-A846-01160(45K), remove the protective bushes from the bottom of the inverter.
For the FR-A846-01800(55K) or higher, remove the protective bushes from the bottom and the side of the inverter.
(Do not remove the protective bushes from the holes that are not used for wiring of cables.)

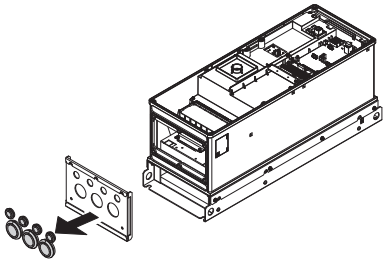

FR-A846-00023(0.4K) to FR-A846-00470(18.5K)

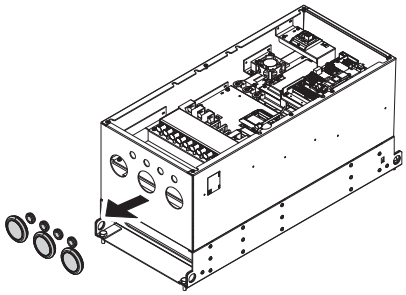

FR-A846-00620(22K) to FR-A846-01160(45K)

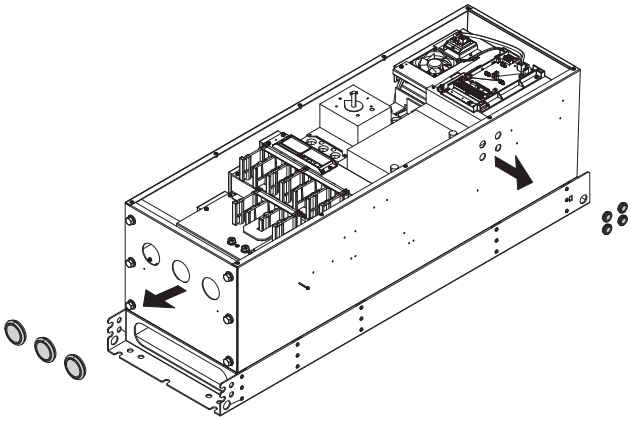

FR-A846-01800(55K) to FR-A846-03610(132K)

NOTE

- For the FR-A846-01800(55K) or higher, do not remove the screws on the bottom of the inverter. The IPX5 waterproof performance may be impaired.

(4) Fix the cables using a cable gland and a nut, according to the diameter of the holes.
For the details such as hole diameters and recommended cable glands, refer to the following table.

FR-A846-00023(0.4K) to 00170(5.5K)

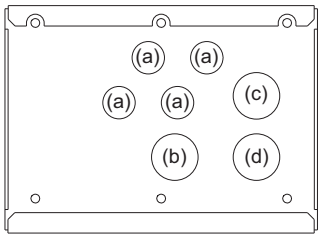

FR-A846-00250(7.5K) to 00470(18.5K)

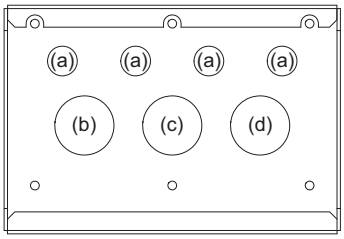

FR-A846-00620(22K) to 01160(45K)

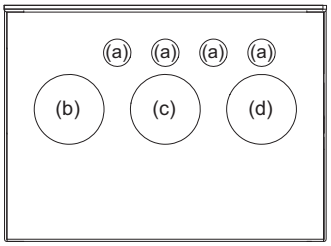

FR-A846-01800(55K) to 03610(132K)

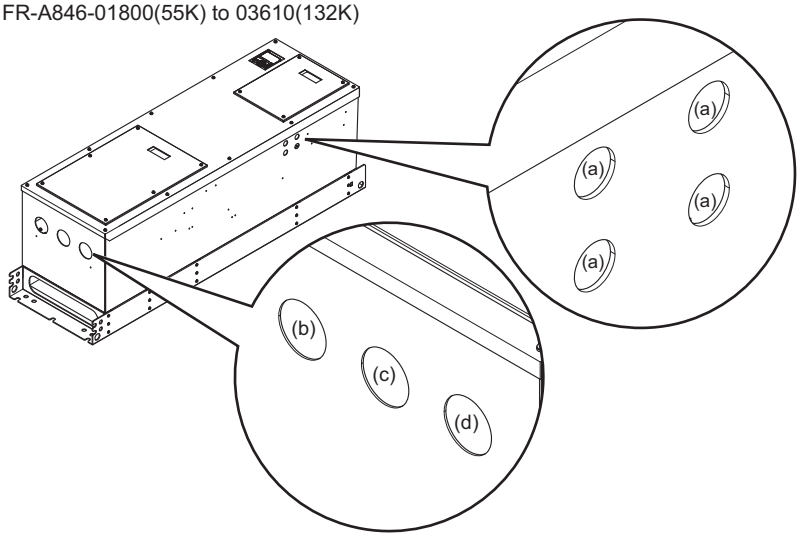

Inverter capacity	Symbol	Recommended layout example	Hole diameter (mm)	Recommended cable gland (Manufactured by LAPP KABEL)	Recommended nut (Manufactured by LAPP KABEL)
FR-A846-00023(0.4K) to 00170(5.5K)	(a)	Control circuit wiring	20.3	SKINTOP MS-SC-M20 53112630 *1 SKINTOP MS-M20 53112020 *2	SKINDICHT SM-M20 52103020
	(b)	AC power input wiring	32.3	SKINTOP MS-SC-M32 53112650 *1 SKINTOP MS-M32 BRUSH 53112677 *1 SKINTOP MS-M32 53112040 *2	SKINDICHT SM-M32 52103040
	(c)	Brake unit connection wiring			
	(d)	Inverter output wiring			
FR-A846-00250(7.5K) to 00470(18.5K)	(a)	Control circuit wiring	20.3	SKINTOP MS-SC-M20 53112630 *1 SKINTOP MS-M20 53112020 *2	SKINDICHT SM-M20 52103020
	(b)	AC power input wiring	40.4	SKINTOP MS-SC-M40 53112660 *1 SKINTOP MS-M40 BRUSH 53112678 *1 SKINTOP MS-M40 53112050 *2	SKINDICHT SM-M40 52103050
	(c)	Brake unit connection wiring			
	(d)	Inverter output wiring			
FR-A846-00620(22K) to 02600(90K)	(a)	Control circuit wiring	20.3	SKINTOP MS-SC-M20 53112630 *1 SKINTOP MS-M20 53112020 *2	SKINDICHT SM-M20 52103020
	(b)	AC power input wiring	63	SKINTOP MS-M63 BRUSH 53112680 *1 SKINTOP MS-M63 53112070 *2	SKINDICHT SM-M63 52103070
	(c)	Brake unit connection wiring			
	(d)	Inverter output wiring			
FR-A846-03250(110K), 03610(132K)	(a)	Control circuit wiring	20.3	SKINTOP MS-SC-M20 53112630 *1 SKINTOP MS-M20 53112020 *2	SKINDICHT SM-M20 52103020
	(b)	AC power input wiring	63	SKINTOP MS-M63 BRUSH PLUS 53112681 *1 SKINTOP MS-M63 PLUS 53112080 *2	SKINDICHT SM-M63 52103070
	(c)	Brake unit connection wiring			
	(d)	Inverter output wiring			

*1 EMC-compliant cable gland
*2 General-purpose cable gland

(5) For the FR-A846-00470(18.5K) or lower, install the wiring cover.

(6) Connect cables to the terminals of the inverter.

(7) Install the front cover to the inverter. (Refer to page 15)

⚠ CAUTION

- **Always use a waterproof cable gland (IP55 or higher) for the hole from which the protective bush is removed because water may get into the inverter.**

2.5.4 Applicable cables and the wiring length

Select a recommended cable size to ensure that the voltage drop will be 2% or less.
If the wiring distance is long between the inverter and motor, the voltage drop in the main circuit wires will cause the motor torque to decrease especially at a low speed.
The following table indicates inverter/cable combinations for a wiring length of 20 m.

- 400 V class (440 V input power supply (with 150% rated current for one minute))

Applicable inverter model FR-A846-[ ]	Terminal screw size*4	Tightening torque N·m	Crimping terminal		Cable gauge								
					HIV cables, etc. (mm^2)*1				AWG/MCM*2		PVC cables, etc. (mm^2)*3		
			R/L1, S/L2, T/L3	U, V, W	R/L1, S/L2, T/L3	U, V, W	P/+	Earthing (grounding) cable	R/L1, S/L2, T/L3	U, V, W	R/L1, S/L2, T/L3	U, V, W	Earthing (grounding) cable
00023(0.4K) to 00126(3.7K)	M4	1.5	2-4	2-4	2	2	2	2	14	14	2.5	2.5	2.5
00170(5.5K)	M4	1.5	2-4	2-4	2	2	3.5	3.5	12	14	2.5	2.5	4
00250(7.5K)	M6	4.4	5.5-6	5.5-6	3.5	3.5	3.5	3.5	12	12	4	4	4
00310(11K)	M6	4.4	5.5-6	5.5-6	5.5	5.5	5.5	5.5	10	10	6	6	10
00380(15K)	M6	4.4	5.5-6	5.5-6	5.5	5.5	8	5.5	10	10	6	6	10
00470(18.5K)	M6	4.4	8-6	8-6	8	8	14	8	8	8	10	10	16
00620(22K)	M6	4.4	14-6	14-6	14	14	22	14	6	6	16	16	16
00770(30K)	M6	4.4	22-6	22-6	22	22	22	14	4	4	25	25	16
00930(37K)	M8	7.8	22-8	22-8	22	22	22	14	4	4	25	25	16
01160(45K)	M8	7.8	38-8	38-8	38	38	38	22	2	2	50	50	25
01800(55K)	M10	14.7	60-10	60-10	60	60	60	22	1/0	1/0	50	50	25
02160(75K)	M10	14.7	60-10	60-10	60	60	60	22	1/0	1/0	50	50	25
02600(90K)	M10	14.7	60-10	60-10	60	60	80	22	3/0	3/0	50	50	25
03250(110K)	M10	14.7	80-10	80-10	80	80	80	38	3/0	3/0	70	70	35
03610(132K)	M10	14.7	100-10	100-10	100	100	100	38	4/0	4/0	95	95	50

*1 For the FR-A846-01800(55K) or lower, it is the gauge of a cable with the continuous maximum permissible temperature of 75°C (HIV cable (600 V grade heat-resistant PVC insulated wire), etc.). It assumes a surrounding air temperature of 50°C or lower and the wiring distance of 20 m or shorter.
For the FR-A846-02160(75K) or higher, it is the gauge of the cable with the continuous maximum permissible temperature of 90°C or higher. (LMFC (heat resistant flexible cross-linked polyethylene insulated cable), etc.). It assumes a surrounding air temperature of 50°C or lower.

*2 For the FR-A846-01160(45K) or lower, it is the gauge of a cable with the continuous maximum permissible temperature of 75°C (THHW cable). It assumes a surrounding air temperature of 40°C or lower and the wiring distance of 20 m or shorter.
For the FR-A846-01800(55K) or higher, it is the gauge of a cable with the continuous maximum permissible temperature of 90°C (THHN cable). It assumes a surrounding air temperature of 40°C or lower. (For the use in the United States or Canada, refer to page 141.)

*3 For the FR-A846-01160(45K) or lower, it is the gauge of a cable with the continuous maximum permissible temperature of 70°C (PVC cable). It assumes a surrounding air temperature of 40°C or lower and the wiring distance of 20 m or shorter.
For the FR-A846-01800(55K) or higher, it is the gauge of a cable with the continuous maximum permissible temperature of 90°C (XLPE cable). It assumes a surrounding air temperature of 40°C or lower. (Selection example for use mainly in Europe.)

*4 The terminal screw size indicates the size of terminal screw for R/L1, S/L2, T/L3, U, V, W, P/+, N/-, P1, and a screw for earthing (grounding).

The line voltage drop can be calculated by the following formula:

$$\text{Line voltage drop [V]} = \frac{\sqrt{3} \times \text{wire resistance [m}\Omega\text{/m]} \times \text{wiring distance [m]} \times \text{current [A]}}{1000}$$

Use a larger diameter cable when the wiring distance is long or when it is desired to decrease the voltage drop (torque reduction) in the low speed range.

NOTE

- Tighten the terminal screw to the specified torque.
  A screw that has been tightened too loosely can cause a short circuit or malfunction.
  A screw that has been tightened too tightly can cause a short circuit or malfunction due to the unit breakage.
- Use crimping terminals with insulation sleeves to wire the power supply and motor.

◆Total wiring length

◆With induction motor

Connect one or more general-purpose motors within the total wiring length shown in the following table. (The wiring length should be 100 m or less under vector control.)

Pr.72 setting (carrier frequency)	FR-A846-00023(0.4K)	FR-A846-00038(0.75K)	FR-A846-00052(1.5K) or higher
2 (2 kHz) or lower	300 m	500 m	500 m
3 (3 kHz) or higher	200 m	300 m	500 m

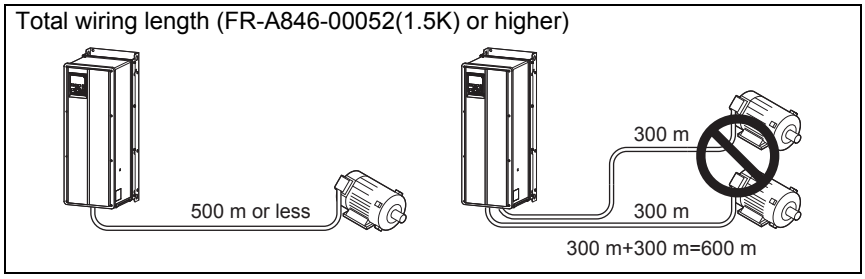

When driving a 400 V class motor by the inverter, surge voltages attributable to the wiring constants may occur at the motor terminals, deteriorating the insulation of the motor. In this case, take one of the following measures.

- Use a "400 V class inverter-driven insulation-enhanced motor" and set **Pr.72 PWM frequency selection** according to the wiring length.

Wiring length 50 m or shorter	Wiring length 50 m to 100 m	Wiring length longer than 100 m
15 (14.5 kHz) or lower	9 (9 kHz) or lower	4 (4 kHz) or lower

- For the FR-A846-01800(55K) or lower, connect a surge voltage suppression filter (FR-ASF-H/FR-BMF-H) at the output side of the inverter. For the FR-A846-02160(75K) or higher, connect a sine wave filter (MT-BSL/BSC) at the output side of the inverter.

◆With PM motor

The wiring length should be 100 m or shorter when connecting a PM motor.

Use one PM motor for one inverter. Multiple PM motors cannot be connected to an inverter.

When the wiring length exceeds 50 m for a 400 V class motor driven by an inverter under PM sensorless vector control, set "9" (6 kHz) or less in **Pr.72 PWM frequency selection**.

NOTE

- Especially for long-distance wiring or wiring with shielded cables, the inverter may be affected by a charging current caused by stray capacitances of the wiring, leading to an activation of the overcurrent protection, malfunction of the fast-response current limit operation, or even to an inverter failure. It may also cause a malfunction or fault of the equipment connected ON the inverter output side. Stray capacitances of the wiring differ by the installation condition, use the total wiring length in the table above as reference values. If the fast-response current limit function malfunctions, disable this function. (Refer to **Pr.156 Stall prevention operation selection** on the Instruction Manual (Detailed).)
- A surge voltage suppression filter (FR-ASF-H/FR-BMF-H) can be used under V/F control and Advanced magnetic flux vector control. A sine wave filter (MT-BSL/BSC) can be used under V/F control. Do not use the filters under different control methods.
- For the details of **Pr.72 PWM frequency selection**, refer to the Instruction Manual (Detailed).
- Refer to page 87 to drive a 400 V class motor by an inverter.
- The carrier frequency is limited during PM sensorless vector control. (Refer to the Instruction Manual (Detailed).)

2.5.5 Earthing (grounding) precautions

Always earth (ground) the motor and inverter.

◆Purpose of earthing (grounding)

Generally, an electrical apparatus has an earth (ground) terminal, which must be connected to the ground before use.
An electrical circuit is usually insulated by an insulating material and encased. However, it is impossible to manufacture an insulating material that can shut off a leakage current completely, and actually, a slight current flows into the case. The purpose of earthing (grounding) the case of an electrical apparatus is to prevent operators from getting an electric shock from this leakage current when touching it.
To avoid the influence of external noises, this earthing (grounding) is important to audio equipment, sensors, computers and other apparatuses that handle low-level signals or operate very fast.

◆Earthing (grounding) methods and earthing (grounding) work

As described previously, earthing (grounding) is roughly classified into an electrical shock prevention type and a noise-influenced malfunction prevention type. Therefore, these two types should be clearly distinguished, and the following work must be done to prevent the leakage current having the inverter's high frequency components from entering the malfunction prevention type earthing (grounding):

- Whenever possible, use the independent earthing (grounding) for the inverter.
  If independent earthing (grounding) (I) is not available, use (II) common earthing (grounding) in the figure below where the inverter is connected with the other equipment at an earthing (grounding) point. Do not use the other equipment's earthing (grounding) cable to earth (ground) the inverter as shown in (III).
  A leakage current containing many high frequency components flows into the earthing (grounding) cables of the inverter and peripheral devices. Because of this, the inverter must be earthed (grounded) separately from EMI-sensitive devices.
  In a high building, it may be effective to use the EMI prevention type earthing (grounding) connecting to an iron structure frame, and electric shock prevention type earthing (grounding) with the independent earthing (grounding) together.
- This inverter must be earthed (grounded). Earthing (Grounding) must conform to the requirements of national and local safety regulations and electrical codes. (NEC section 250, IEC 61140 class 1 and other applicable standards).
  A neutral-point earthed (grounded) power supply in compliance with EN standard must be used.
- Use the thickest possible earthing (grounding) cable. The earthing (grounding) cable should be the size indicated in the table on page 31.
- The earthing (grounding) point should be as close as possible to the inverter, and the earth (ground) wire length should be as short as possible.
- Run the earthing (grounding) cable as far away as possible from the I/O wiring of equipment sensitive to noises and run them in parallel in the minimum distance.

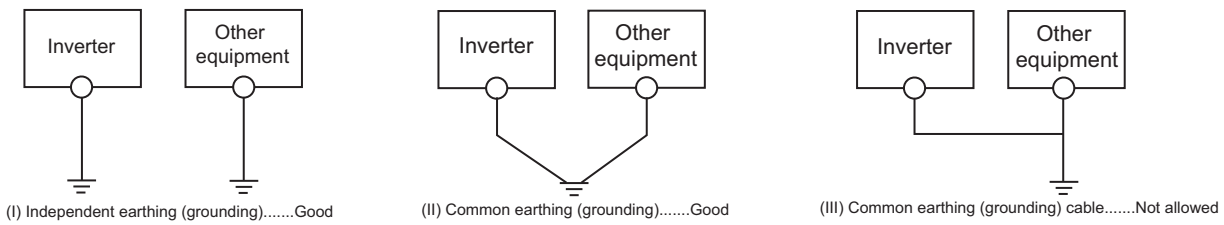

NOTE

- To be compliant with the EU Directive (Low Voltage Directive), refer to page 137.

2.6 Control circuit

2.6.1 Details on the control circuit terminals

Input signal function of the terminals in [ ] can be selected by setting **Pr.178 to Pr.196 (I/O terminal function selection)**. For the details of the control circuit terminal function selection, refer to the Instruction Manual (Detailed).

◆Input signal

Type	Terminal symbol	Terminal name	Terminal function description		Rated specification
Contact input	STF	Forward rotation start	Turn ON the STF signal to start forward rotation and turn it OFF to stop.	When the STF and STR signals are turned ON simultaneously, the stop command is given.	Input resistance 4.7 kΩ Voltage when contacts are open: 21 to 27 VDC When contacts are short-circuited: 4 to 6 mADC
	STR	Reverse rotation start	Turn ON the STR signal to start reverse rotation and turn it OFF to stop.		
	STP (STOP)	Start self-holding selection	Turn ON the STP (STOP) signal to self-hold the start signal.		
	RH, RM, RL	Multi-speed selection	Multi-speed can be selected according to the combination of RH, RM and RL signals.		
	JOG	Jog mode selection	Turn ON the JOG signal to enable JOG operation (initial setting) and turn ON the start signal (STF or STR) to start JOG operation.		
		Pulse train input	Terminal JOG is also used as a pulse train input terminal. To use as a pulse train input terminal, change the **Pr.291** setting. (maximum input pulse: 100k pulses/s)		Input resistance 2 kΩ When contacts are short-circuited: 8 to 13 mADC
	RT	Second function selection	Turn ON the RT signal to enable the second function. When the second function such as "second torque boost" and "second V/F (base frequency)" is set, turning ON the RT signal enables the selected function.		Input resistance 4.7 kΩ Voltage when contacts are open: 21 to 27 VDC When contacts are short-circuited: 4 to 6 mADC
	MRS	Output stop	Turn ON the MRS signal (20 ms or more) to stop the inverter output. Use this signal to shut off the inverter output when stopping the motor with an electromagnetic brake.		
	RES	Reset	Use this signal to reset a fault output provided when a protective function is activated. Turn ON the RES signal for 0.1 s or longer, then turn it OFF. In the initial setting, reset is set always-enabled. Setting **Pr.75** makes reset possible only after the occurrence of an inverter fault. The inverter will restart about 1 s after reset.		
	AU	Terminal 4 input selection	The terminal 4 function is available only when the AU signal is turned ON. Turning the AU signal ON makes terminal 2 invalid.		
	CS	Selection of automatic restart after instantaneous power failure	When the CS signal is left ON, the inverter restarts automatically at power restoration. Note that restart setting is necessary for this operation. In the initial setting, a restart is disabled.		
	SD	Contact input common (sink)*2	Common terminal for the contact input terminal (sink logic), terminal FM.		—
		External transistor common (source)*3	Connect this terminal to the power supply common terminal of a transistor output (open collector output) device, such as a programmable controller, in the source logic to avoid malfunction by undesirable current.		
		24 VDC power supply common	Common terminal for the 24 VDC power supply (terminal PC, terminal +24) Isolated from terminals 5 and SE.		
	PC	External transistor common (sink)*2	Connect this terminal to the power supply common terminal of a transistor output (open collector output) device, such as a programmable controller, in the sink logic to avoid malfunction by undesirable currents. (Refer to page 39.)		Power supply voltage range 19.2 to 28.8 VDC Permissible load current 100 mA
		Contact input common (source)*3	Common terminal for contact input terminal (source logic). (Refer to page 39.)		
		24 VDC power supply	Can be used as a 24 VDC 0.1 A power supply.		

Type	Terminal symbol	Terminal name	Terminal function description	Rated specification
Frequency setting	10E	Frequency setting power supply	When connecting the frequency setting potentiometer at an initial status, connect it to the terminal 10. Change the input specifications of the terminal 2 using **Pr.73** when connecting it to the terminal 10E.	10 VDC ±0.4 V Permissible load current 10 mA
	10			5 VDC ±0.5 V Permissible load current 10 mA
	2	Frequency setting (voltage)	Inputting 0 to 5 VDC (or 0 to 10 V, 0 to 20 mA) provides the maximum output frequency at 5 V (10 V, 20 mA) and makes input and output proportional. Use **Pr.73** to switch among input 0 to 5 VDC (initial setting), 0 to 10 VDC, and 0 to 20 mA. Set the voltage/current input switch in the ON position to select current input (0 to 20 mA). *1	When voltage is input: Input resistance 10 kΩ ±1 kΩ Maximum permissible voltage 20 VDC When current is input: Input resistance 245 Ω ±5 Ω Permissible maximum current 30 mA 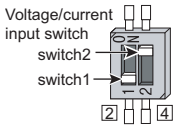
	4	Frequency setting (current)	Inputting 4 to 20 mADC (or 0 to 5 V, 0 to 10 V) provides the maximum output frequency at 20 mA and makes input and output proportional. This input signal is valid only when the AU signal is ON (terminal 2 input is invalid). Use **Pr.267** to switch among input 4 to 20 mA (initial setting), 0 to 5 VDC, and 0 to 10 VDC. Set the voltage/current input switch in the OFF position to select voltage input (0 to 5 V/0 to 10 V). *1 Use **Pr.858** to switch terminal functions.	
	1	Frequency setting auxiliary	Inputting 0 to ±5 VDC or 0 to ±10 VDC adds this signal to terminal 2 or 4 frequency setting signal. Use Pr.73 to switch between input 0 to ±5 VDC and 0 to ±10 VDC (initial setting). Use **Pr.868** to switch terminal functions.	Input resistance 10 kΩ ±1 kΩ Permissible maximum voltage ±20 VDC
	5	Frequency setting common	Common terminal for frequency setting signal (terminal 2, 1 or 4) and analog output terminal AM, CA. Do not earth (ground).	—
Thermistor	10 2	PTC thermistor input	For receiving PTC thermistor outputs. When PTC thermistor is valid (**Pr.561** ≠ "9999"), the terminal 2 is not available for frequency setting.	Applicable PTC thermistor specification Overheat detection resistance: 0.5 to 30 kΩ (Set by **Pr.561**)
External Power supply input	+24	24 V external power supply input	For connecting a 24 V external power supply. If a 24 V external power supply is connected, power is supplied to the control circuit while the main power circuit is OFF. (Refer to **page 43**.)	Input voltage 23 to 25.5 VDC Input current 1.4 A or less

*1 Set **Pr.73**, **Pr.267**, and the voltage/current input switch correctly, then input an analog signal in accordance with the setting.
Applying a voltage with the voltage/current input switch ON (current input is selected) or a current with the switch OFF (voltage input is selected) could cause component damage of the inverter or analog circuits of output devices. (For the details, refer to the Instruction Manual (Detailed).)

*2 Sink logic is initially set for the FM-type inverter.

*3 Source logic is initially set for the CA-type inverter.

◆Output signal

Type	Terminal symbol	Terminal name	Terminal function description		Rated specification
Relay	A1, B1, C1	Relay output 1 (fault output)	1 changeover contact output that indicates that an inverter's protective function has been activated and the outputs are stopped. Fault: discontinuity across B and C (continuity across A and C), Normal: continuity across Band C (discontinuity across A and C)		Contact capacity 230 VAC 0.3 A (power factor = 0.4) 30 VDC 0.3 A
	A2, B2, C2	Relay output 2	1 changeover contact output		
Open collector	RUN	Inverter running	Switched to LOW when the inverter output frequency is equal to or higher than the starting frequency (initial value 0.5 Hz). Switched to HIGH during stop or DC injection brake operation.		Permissible load 24 VDC (maximum 27 VDC) 0.1 A (The voltage drop is 2.8 V at maximum while the signal is ON.) LOW is when the open collector output transistor is ON (conducted). HIGH is when the transistor is OFF (not conducted).
	SU	Up to frequency	Switched to LOW when the output frequency is within the set frequency range ±10% (initial value). Switched to HIGH during acceleration/deceleration and at a stop.	Fault code (4 bits) output. (Refer to the Instruction Manual (Detailed).)	
	OL	Overload warning	Switched to LOW when stall prevention is activated by the stall prevention function. Switched to HIGH when stall prevention is canceled.		
	IPF	Instantaneous power failure	Switched to LOW when an instantaneous power failure occurs or when the undervoltage protection is activated.		
	FU	Frequency detection	Switched to LOW when the inverter output frequency is equal to or higher than the preset detection frequency, and to HIGH when it is less than the preset detection frequency.		
	SE	Open collector output common	Common terminal for terminals RUN, SU, OL, IPF, FU		—
Pulse	FM *1	For meter	Outputs a selected monitored item (such as output frequency) among several monitored items. The signal is not output during an inverter reset. The output signal is proportional to the magnitude of the corresponding monitoring item. Use **Pr.55**, **Pr.56**, and **Pr.866** to set full scales for the monitored output frequency, output current, and torque. (Refer to the Instruction Manual (Detailed).)	Output item: Output frequency (initial setting)	Permissible load current 2 mA For full scale 1440 pulses/s
		NPN open collector output		This terminal can be used for open collector outputs by setting **Pr.291**.	Maximum output pulse 50k pulses/s Permissible load current 80 mA
Analog	AM	Analog voltage output		Output item: Output frequency (initial setting)	Output signal 0 to ±10 VDC, Permissible load current 1 mA (load impedance 10 kΩ or more) Resolution 8 bits
	CA *2	Analog current output			Load impedance 200 Ω to 450 Ω Output signal 0 to 20 mADC

*1 Terminal FM is provided in the FM-type inverter.
*2 Terminal CA is provided in the CA-type inverter.

◆Communication

Type	Terminal symbol		Terminal name	Terminal function description	
RS-485	—		PU connector	With the PU connector, communication can be made through RS-485. (For connection on a 1:1 basis only) Conforming standard: EIA-485 (RS-485) Transmission format: Multidrop link Communication speed: 4800 to 115200 bps Wiring length: 500 m	
	RS-485 terminals	TXD+	Inverter transmission terminal	The RS-485 terminals enables the communication by RS-485. Conforming standard: EIA-485 (RS-485) Transmission format: Multidrop link Communication speed: 300 to 115200 bps Overall length: 500 m	
		TXD-			
		RXD+	Inverter reception terminal		
		RXD-			
		GND (SG)	Earthing (grounding)		
USB	—		USB A connector	A connector (receptacle) A USB memory device enables parameter copies and the trace function.	Interface: Conforms to USB 1.1 (USB 2.0 full-speed compatible) Transmission speed: 12 Mbps (Refer to page 51.)
			USB B connector	Mini B connector (receptacle) Connected to a personal computer via USB to enable setting, monitoring, test operations of the inverter by FR Configurator 2.	

◆Safety stop signal

For the safety stop function, refer to page 45.

Terminal symbol	Terminal name	Terminal function description	Rated specification
S1	Safety stop input (Channel 1)	The terminals S1 and S2 are used for the safety stop input signal for the safety relay module. The terminals S1 and S2 are used at the same time (dual channel). Inverter output is shutoff by shortening/opening between terminals S1 and SIC, or between S2 and SIC. In the initial status, terminals S1 and S2 are shorted with the terminal PC by shorting wires. The terminal SIC is shorted with the terminal SD. Remove the shorting wires and connect the safety relay module when using the safety stop function.	Input resistance 4.7 kΩ Input current 4 to 6 mADC (with 24 VDC input)
S2	Safety stop input (Channel 2)		
SIC	Safety stop input terminal common	Common terminal for terminals S1 and S2.	—
So (SO)	Safety monitor output (open collector output)	Indicates the safety stop input signal status. Switched to LOW when the status is other than the internal safety circuit failure. Switched to HIGH during the internal safety circuit failure status. (LOW is when the open collector output transistor is ON (conducted). HIGH is when the transistor is OFF (not conducted).) Refer to the Safety stop function instruction manual (BCN-A23228-001) when the signal is switched to HIGH while both terminals S1 and S2 are open. (Please contact your sales representative for the manual.)	Permissible load 24 VDC (27 VDC at maximum) 0.1 A (The voltage drop is 3.4 V at maximum while the signal is ON.)
SOC	Safety monitor output terminal common	Common terminal for terminal So (SO).	—

2.6.2 Control logic (sink/source) change

Change the control logic of input signals as necessary.

To change the control logic, change the jumper connector position on the control circuit board.

Connect the jumper connector to the connector pin of the desired control logic.

The control logic of input signals is initially set to the sink logic (SINK) for the FM type.

The control logic of input signals is initially set to the source logic (SOURCE) for the CA type.

(The output signals may be used in either the sink or source logic independently of the jumper connector position.)

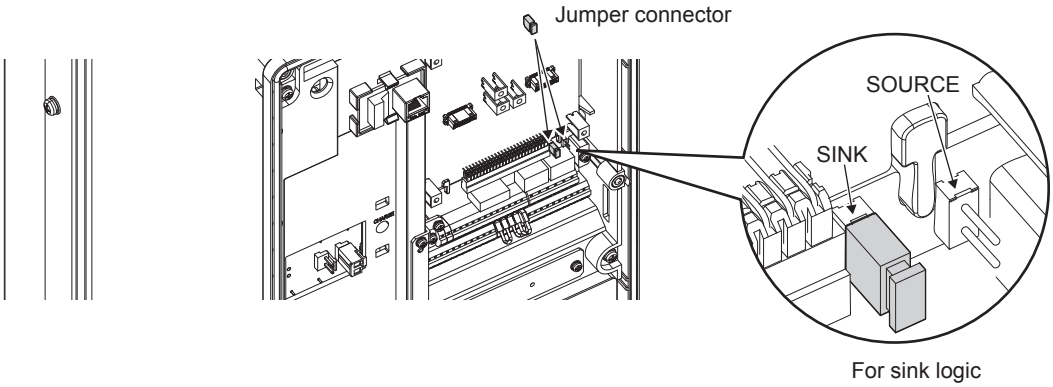

NOTE

- Make sure that the jumper connector is installed correctly.
- Never change the control logic while power is ON.

◆Sink logic and source logic

- In the sink logic, a signal switches ON when a current flows from the corresponding signal input terminal. Terminal SD is common to the contact input signals. Terminal SE is common to the open collector output signals.
- In the source logic, a signal switches ON when a current flows into the corresponding signal input terminal. Terminal PC is common to the contact input signals. Terminal SE is common to the open collector output signals.

●Current flow concerning the input/output signal when sink logic is selected

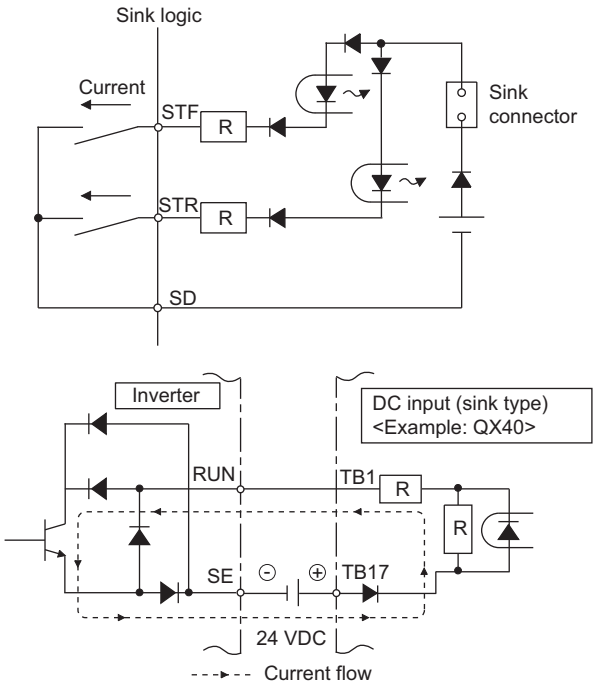

●Current flow concerning the input/output signal when source logic is selected

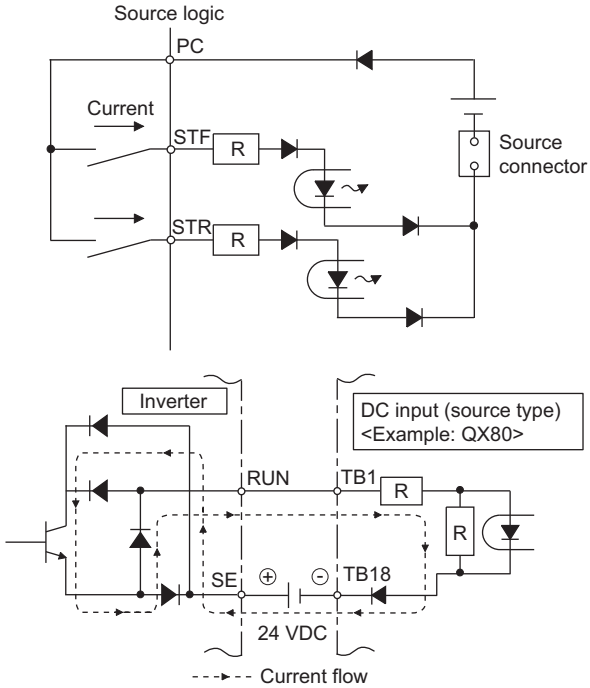

- When using an external power supply for transistor output

Sink logic	Source logic
Use the terminal PC as a common terminal, and perform wiring as shown below. (Do not connect terminal SD of the inverter with the terminal 0 V of the external power supply. When using terminals PC-SD as a 24 VDC power supply, do not install an external power supply in parallel with the inverter. Doing so may cause a malfunction in the inverter due to undesirable currents.)	Use the terminal SD as a common terminal, and perform wiring as shown below. (Do not connect terminal PC of the inverter with the terminal +24 V of the external power supply. When using terminals PC-SD as a 24 VDC power supply, do not install an external power supply in parallel with the inverter. Doing so may cause a malfunction in the inverter due to undesirable currents.)
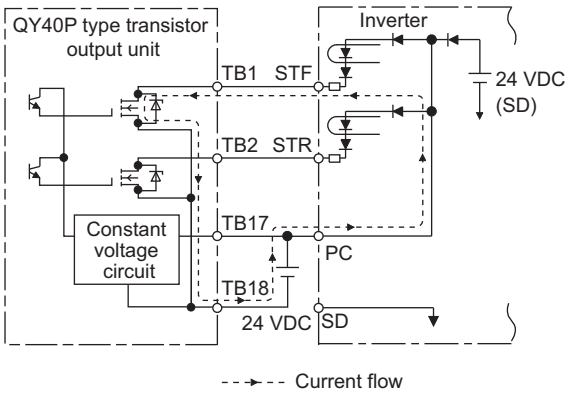	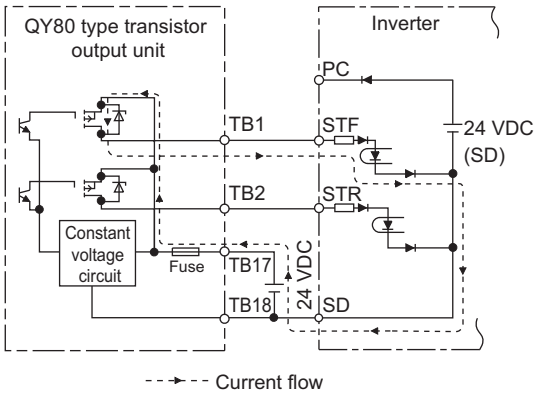

2.6.3 Wiring of control circuit

◆Control circuit terminal layout

- Recommended cable gauge: 0.3 to 0.75 mm^2

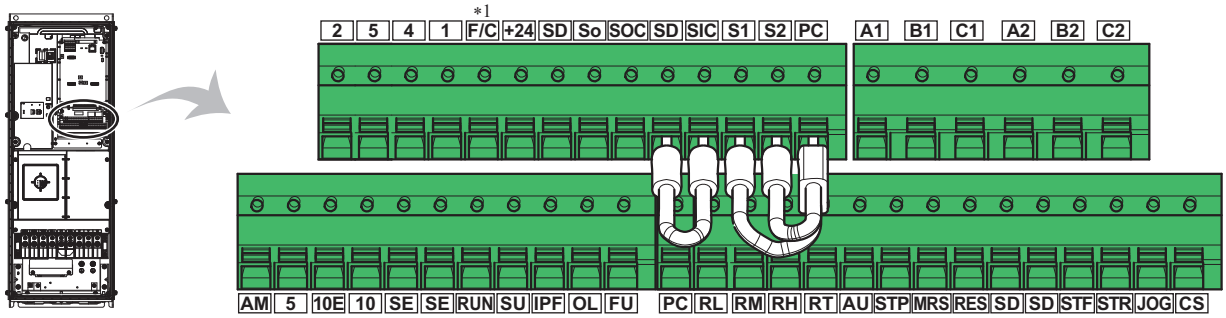

*1 This terminal operates as the terminal FM for the FM type, and as the terminal CA for the CA type.

◆Wiring method

- Power supply connection

For the control circuit wiring, strip off the sheath of a cable, and use it with a blade terminal. For a single wire, strip off the sheath of the wire and apply directly.

Insert the blade terminal or the single wire into a socket of the terminal.

(1) Strip off the sheath for the below length. If the length of the sheath peeled is too long, a short circuit may occur with neighboring wires. If the length is too short, wires might come off.
Wire the stripped cable after twisting it to prevent it from becoming loose. In addition, do not solder it.

Cable stripping size

(2) Crimp the blade terminal.
Insert wires to a blade terminal, and check that the wires come out for about 0 to 0.5 mm from a sleeve.
Check the condition of the blade terminal after crimping. Do not use a blade terminal of which the crimping is inappropriate, or the face is damaged.

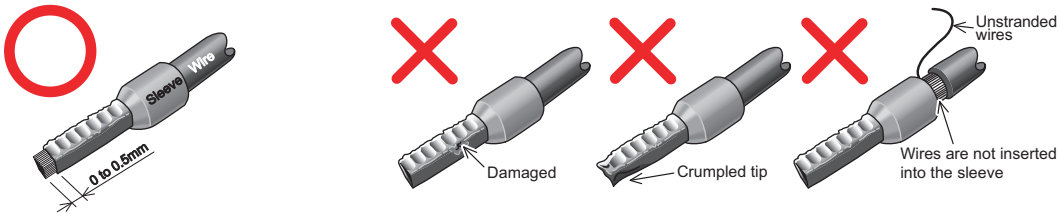

- Blade terminals commercially available (as of January 2017)
  Phoenix Contact Co., Ltd.

Cable gauge (mm^2)	Ferrule terminal model			Crimping tool model
	With insulation sleeve	Without insulation sleeve	For UL wire*1	
0.3	AI 0, 34-10TQ	—	—	CRIMPFOX 6
0.5	AI 0,5-10WH	—	AI 0,5-10WH-GB	
0.75	AI 0,75-10GY	A 0,75-10	AI 0,75-10GY-GB	
1	AI 1-10RD	A 1-10	AI 1-10RD/1000GB	
1.25, 1.5	AI 1,5-10BK	A 1,5-10	AI 1,5-10BK/1000GB*2	
0.75 (for two wires)	AI-TWIN 2 × 0,75-10GY	—	—	

*1 A ferrule terminal with an insulation sleeve compatible with the MTW wire which has a thick wire insulation.
*2 Applicable for the terminal A1, B1, C1, A2, B2, C2.

NICHIFU Co.,Ltd.

Cable gauge (mm^2)	Blade terminal product number	Insulation cap product number	Crimping tool product number
0.3 to 0.75	BT 0.75-11	VC 0.75	NH 69

(3) Insert the wires into a socket.

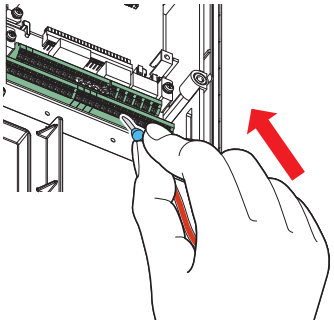

When using a single wire or stranded wires without a blade terminal, push the open/close button all the way down with a flathead screwdriver, and insert the wire.

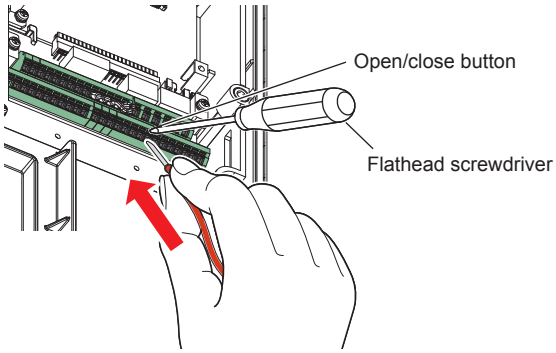

NOTE

- When using stranded wires without a blade terminal, twist enough to avoid short circuit with a nearby terminals or wires.
- Lead the wires through the holes for wiring. (For the details of the holes for wiring, refer to page 27.)
- Place the flathead screwdriver vertical to the open/close button. In case the blade tip slips, it may cause an inverter damage or injury.

- Wire removal

Pull the wire while pushing the open/close button all the way down firmly with a flathead screwdriver.

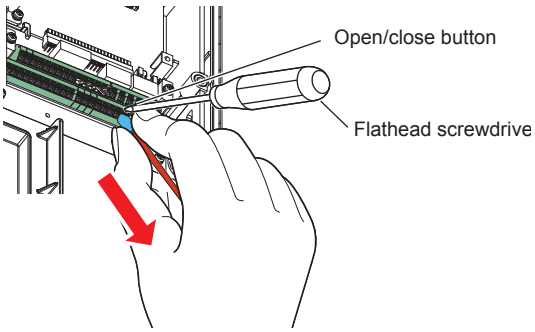

NOTE

- Pulling out the wire forcefully without pushing the open/close button all the way down may damage the terminal block.
- Use a small flathead screwdriver (tip thickness: 0.4 mm/tip width: 2.5 mm).
  If a flathead screwdriver with a narrow tip is used, terminal block may be damaged.
  Commercially available products (as of February 2016)

Name	Model	Manufacturer
Driver	SZF 0- 0,4 × 2,5	Phoenix Contact Co., Ltd.

- Place the flathead screwdriver vertical to the open/close button. In case the blade tip slips, it may cause an inverter damage or injury.

◆Common terminals of the control circuit (SD, PC, 5, SE)

- Terminals SD (sink logic), PC (source logic), 5, and SE are common terminals (0V) for I/O signals. (All common terminals are isolated from each other.) Do not earth (ground) these terminals. Avoid connecting the terminal SD (sink logic) with 5, the terminal PC (source logic) with 5, and the terminal SE with 5.
- In the sink logic, terminal SD is a common terminal for the contact input terminals (STF, STR, STP (STOP), RH, RM, RL, JOG, RT, MRS, RES, AU, CS) and the pulse train output terminal (FM*1). The open collector circuit is isolated from the internal control circuit by photocoupler.
- In the source logic, terminal PC is a common terminal for the contact input terminals (STF, STR, STP (STOP), RH, RM, RL, JOG, RT, MRS, RES, AU, CS). The open collector circuit is isolated from the internal control circuit by photocoupler.
- Terminal 5 is a common terminal for the frequency setting terminals (2, 1 or 4) and the analog output terminals (AM, CA*2). It should be protected from external noise using a shielded or twisted cable.
- Terminal SE is a common terminal for the open collector output terminals (RUN, SU, OL, IPF, FU). The contact input circuit is isolated from the internal control circuit by photocoupler.

*1 Terminal FM is provided in the FM-type inverter.
*2 Terminal CA is provided in the CA-type inverter.

◆Signal inputs by contactless switches

The contact input terminals of the inverter (STF, STR, STP (STOP), RH, RM, RL, JOG, RT, MRS, RES, AU, CS) can be controlled using a transistor instead of a contact switch as shown below.

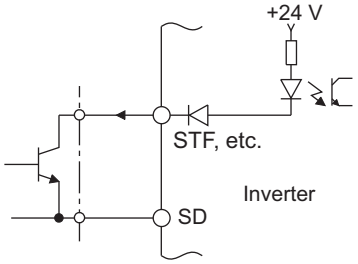

External signal input using transistor (sink logic)

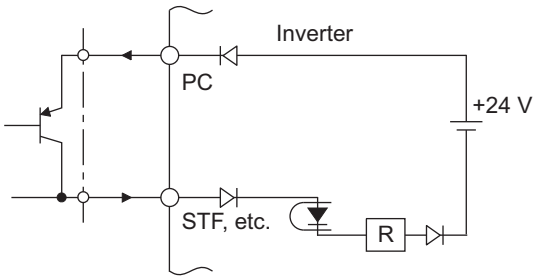

External signal input using transistor (source logic)

2.6.4 Wiring precautions

- It is recommended to use a cable of 0.3 to 0.75 mm^2 for the connection to the control circuit terminals.
- The wiring length should be 30 m (200 m for the terminal FM) at the maximum.
- Use two or more parallel micro-signal contacts or twin contacts to prevent contact faults when using contact inputs since the control circuit input signals are micro-currents.

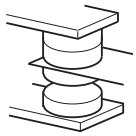

Micro signal contacts

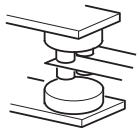

Twin contacts

- To suppress EMI, use shielded or twisted cables for the control circuit terminals and run them away from the main and power circuits (including the 200 V relay sequence circuit). For the cables connected to the control circuit terminals, connect their shields to the common terminal of the connected control circuit terminal. When connecting an external power supply to the terminal PC, however, connect the shield of the power supply cable to the negative side of the external power supply. Do not directly earth (ground) the shield to the enclosure, etc.
- Always apply a voltage to the fault output terminals (A1, B1, C1, A2, B2, C2) via a relay coil, lamp, etc.

2.6.5 When supplying 24 V external power to the control circuit

Connect a 24 V external power supply across terminals +24 and SD. Connecting a 24 V external power supply enables I/O terminal ON/OFF operation, operation panel displays, control functions, and communication during communication operation even at power-OFF of inverter's main circuit power supply. When the main circuit power supply is turned ON, the power supply source changes from the 24 V external power supply to the main circuit power supply.

◆Specification of the applicable 24 V external power supply

Item	Rated specification
Input voltage	23 to 25.5 VDC
Input current	1.4 A or less

Commercially available products (as of February 2015)

Model	Manufacturer
S8JX-N05024C *1 Specifications: Capacity 50 W, output voltage (DC) 24 V, output current 2.1 A Installation method: Front installation with cover or S8VS-06024 *1 Specifications: Capacity 60 W, output voltage (DC) 24 V, output current 2.5 A Installation method: DIN rail installation	OMRON Corporation

*1 For the latest information about OMRON power supply, contact OMRON corporation.

◆Starting and stopping the 24 V external power supply operation

- Supplying 24 V external power while the main circuit power is OFF starts the 24 V external power supply operation. Likewise, turning OFF the main circuit power while supplying 24 V external power starts the 24 V external power supply operation.
- Turning ON the main circuit power stops the 24 V external power supply operation and enables the normal operation.

NOTE

- When the 24 V external power is supplied while the main circuit power supply is OFF, the inverter operation is disabled.
- In the initial setting, when the main power supply is turned ON during the 24 V external power supply operation, a reset is performed in the inverter, then the power supply changes to the main circuit power supply. (The reset can be disabled using **Pr.30**. (For the details of **Pr.30**, refer to the Instruction Manual (Detailed).))

◆Confirming the 24 V external power supply input

- During the 24 V external power supply operation, "EV" flickers on the operation panel.

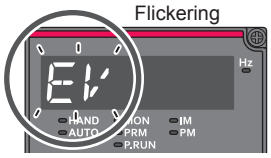

- During the 24 V external power supply operation, the 24 V external power supply operation signal (EV) is output. To use the EV signal, set "68 (positive logic) or 168 (negative logic)" in one of **Pr.190 to Pr.196 (output terminal function selection)** to assign function to an output terminal.

◆Operation while the 24 V external power is supplied

- Fault history and parameters can be read and parameters can be written (when the parameter write from the operation panel is enabled) using the operation panel keys.
- The safety stop function is invalid during the 24 V external power supply operation.
- During the 24 V external power supply operation, the monitor items related to inputs to main circuit power supply, such as the output current and converter output voltage, are invalid.
- The faults, which have occurred when the main circuit power supply is ON, continue to be output after the power supply is changed to the 24 V external power supply. Perform the inverter reset or turn OFF then ON the power to reset the faults.
- If the power supply changes from the main circuit power supply to the 24 V external power supply while measuring the main circuit capacitor's life, the measurement completes after the power supply changes back to the main circuit power supply (**Pr.259** = "3").
- The output data is retained when "1 or 11" is set in **Pr.495 Remote output selection**.

NOTE

- Inrush current equal to or higher than the 24 V external power supply specification may flow at power-ON. Confirm that the power supply and other devices are not affected by the inrush current and the voltage drop caused by it. Depending on the power supply, the inrush current protection may be activated and disable the power supply. Select the power supply and capacity carefully.
- When the wiring length between the external power supply and the inverter is long, the voltage often drops. Select the appropriate wiring size and length to keep the voltage in the rated input voltage range.
- In a serial connection of several inverters, the current increases when it flows through the inverter wiring near the power supply. The increase of the current causes voltage to drop further. When connecting different inverters to different power supplies, use the inverters after confirming that the input voltage of each inverter is within the rated input voltage range. Depending on the power supply, the over current protection may be activated and disable the power supply. Select the power supply and capacity carefully.
- "E.SAF or E.P24" may appear when the start-up time of the 24 V power supply is too long (less than 1.5 V/s) in the 24 V external power supply operation.
- "E.P24" may appear when the 24 V external power supply input voltage is low. Check the external power supply input.
- Do not touch the control circuit terminal block (circuit board) during the 24 V power supply operation (when conducted). Otherwise you may get an electric shock or burn.

2.6.6 Safety stop function

◆Function description

The terminals related to the safety stop function are shown below.

Terminal symbol	Terminal function description	
S1 *1	For input of the safety stop channel 1.	Between S1 and SIC, S2 and SIC Open: In safety stop mode Short: Other than the safety stop mode.
S2 *1	For input of the safety stop channel 2.	
SIC *1	Common terminal for S1 and S2.	
So (SO)	Outputs when an alarm or failure is detected. The signal is output when no internal safety circuit failure*2 exists.	OFF: Internal safety circuit failure*2 ON: No internal safety circuit failure*2
SOC	Open collector output (terminal So (SO)) common	

*1 In the initial status, terminals S1 and PC, S2 and PC, and SIC and SD are respectively shorted with shorting wires. To use the safety stop function, remove all the shortening wires, and then connect to the safety relay module as shown in the following connection diagram.

*2 At an internal safety circuit failure, the operation panel displays one of the faults shown on the next page.

NOTE

- Use the terminal So (SO) to output a fault and to prevent restarting of the inverter. The signal cannot be used as safety stop input terminal to other devices.

◆Connection diagram

To prevent automatic restart after a fault occurrence, connect the reset button of a safety relay module or a safety programmable controller across the terminals So (SO) and SOC. The reset button acts as the feedback input for the safety relay module or the safety programmable controller.

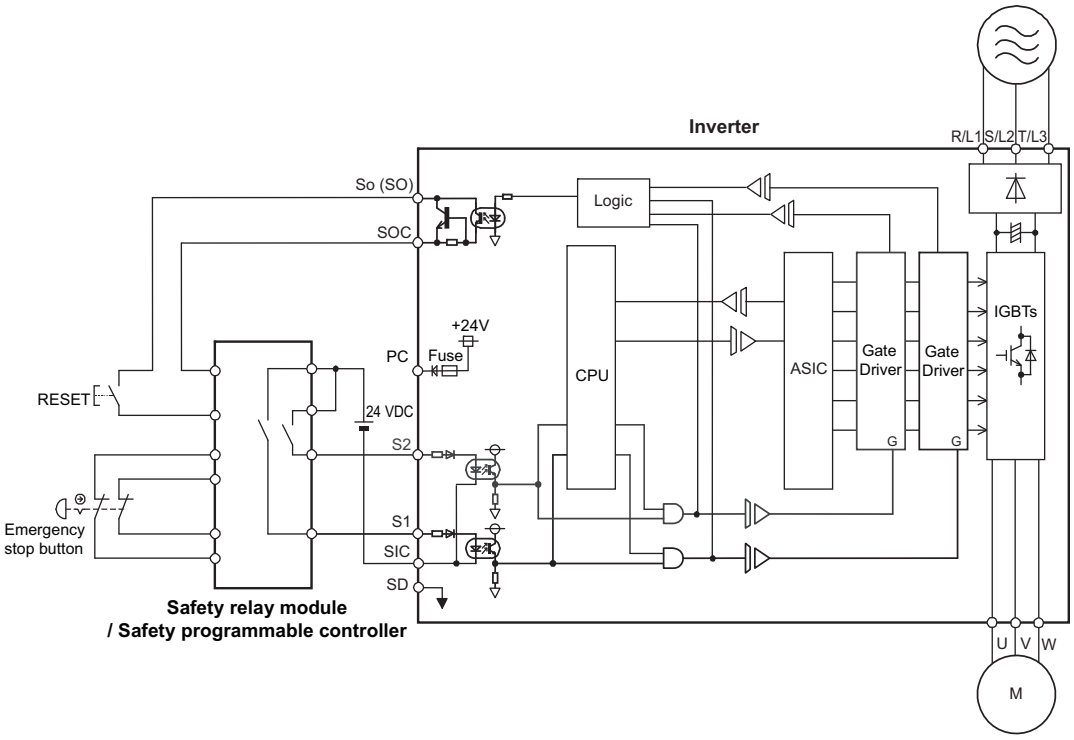

◆Safety stop function operation

Input power	Internal safety circuit status	Input terminal *1,*2		Output terminal	Output signal *8,*9,*10	Inverter running status	Operation panel indication	
		S1	S2	So (SO)	SAFE		E.SAF*6	SA*7
OFF	—	—	—	OFF	OFF	Output shutoff (Safe state)	Not displayed	Not displayed
ON	Normal	ON	ON	ON*3	OFF	Drive enabled	Not displayed	Not displayed
	Normal	ON	OFF	OFF*4	OFF*4	Output shutoff (Safe state)	Displayed	Displayed
	Normal	OFF	ON	OFF*4	OFF*4	Output shutoff (Safe state)	Displayed	Displayed
	Normal	OFF	OFF	ON*3	ON*3	Output shutoff (Safe state)	Not displayed	Displayed
	Fault	ON	ON	OFF	OFF	Output shutoff (Safe state)	Displayed	Not displayed*5
	Fault	ON	OFF	OFF	OFF	Output shutoff (Safe state)	Displayed	Displayed
	Fault	OFF	ON	OFF	OFF	Output shutoff (Safe state)	Displayed	Displayed
	Fault	OFF	OFF	OFF	OFF	Output shutoff (Safe state)	Displayed	Displayed

*1 ON: The transistor is conducted. OFF: The transistor is not conducted.
*2 When not using the safety stop function, short across terminals S1 and PC, S2 and PC, and SIC and SD to use the inverter. (In the initial status, terminals S1 and PC, S2 and PC, and SIC and SD are respectively shorted with shorting wires.)
*3 If any of the faults shown in the following table occurs, terminal So (SO) and the SAFE signal turn OFF.

Error definition	Operation panel indication
Option fault	E.OPT
Communication option fault	E.OP1 to E.OP3
Parameter storage device fault (control circuit board)	E.PE
Retry count excess	E.RET
Parameter storage device fault (main circuit board)	E.PE2
Operation panel power supply short circuit/RS-485 terminals power supply short circuit	E.CTE
24 VDC power fault	E.P24
Safety circuit fault	E.SAF

Error definition	Operation panel indication
Overspeed occurrence	E.OS
Speed deviation excess detection	E.OSD
Signal loss detection	E.ECT
Excessive position fault	E.OD
Brake sequence fault	E.MB1 to E.MB7
Encoder phase fault	E.EP
Magnetic pole position unknown	E.MP
CPU fault	E.CPU
	E.5 to E.7
Internal circuit fault	E.13

*4 When the internal safety circuit is operated normally (no faults occurs), terminal So (SO) and the SAFE signal remain ON until "E.SAF" is displayed. Terminal So (SO) and the SAFE signal turn OFF when "E.SAF" is displayed.
*5 SA is displayed when terminals S1 and S2 are identified as OFF due to the internal safety circuit failure.
*6 If another fault occurs at the same time as E.SAF, the other fault can be displayed.
*7 If another warning occurs at the same time as SA, the other warning can be displayed.
*8 The ON/OFF state of the output signal is the one for the positive logic. The ON and OFF are reversed for the negative logic.
*9 To assign the function of the SAFE signal to an output terminal, set either value shown in the following table in any of **Pr.190 to Pr.196 (Output terminal function selection)**.

Output signal	Pr.190 to Pr.196 setting	
	Positive logic	Negative logic
SAFE	80	180

*10 The use of SAFE signal has not been certified for compliance with safety standards.

◆ For more details, refer to the Safety stop function instruction manual. (A PDF copy can be found in the enclosed CD-ROM. For how to use this CD-ROM, refer to page 146.)

2.7 Operation panel (FR-DU08-01)

2.7.1 Differences with the FR-DU08

Item	FR-DU08	FR-DU08-01
Applicable model	FR-A800	FR-A806
Protective structure	IP40 (except for the PU connector)	IP55 (except for the PU connector)
Outline dimension (W×H×D [mm])	72×78.5×17	80×96×19
Number of fixing screws	2	4
Operation mode indicator	PU/EXT	HAND/AUTO
Operation key	PU/EXT key PU EXT	HAND/AUTO key HAND AUTO
Installation on the enclosure	Available	Not available

2.7.2 Components of the operation panel (FR-DU08-01)

The operation panel (FR-DU08-01) is an IP55 compatible model that can only be mounted to the FR-A806 series.
(It cannot be mounted on the standard model of FR-A800 series.)

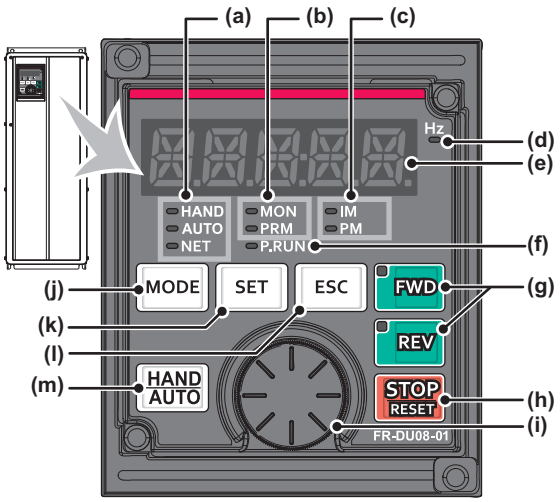

No.	Component	Name	Description
(a)	HAND AUTO NET	Operation mode indicator	HAND: Lit when the inverter is in the PU operation mode. AUTO: Lit when the inverter is in the External operation mode. (Lit when the inverter in the initial setting is powered ON.) NET: Lit when the inverter is in the Network operation mode. HAND and AUTO: Lit when the inverter is in the External/PU combined operation mode 1 or 2.
(b)	MON PRM	Operation panel status indicator	MON: Lit when the operation panel is in the monitoring mode. The indicator quickly blinks twice to indicate activation of the protective function. The indicator slowly blinks before the indication disappears. PRM: Lit when the operation panel is in the parameter setting mode.
(c)	IM PM	Control motor indicator	IM: Lit when the inverter is set to control the induction motor. PM: Lit when the inverter is set to control the PM motor. The indicator blinks during test operation.
(d)	Hz	Frequency unit indicator	Lit when the actual frequency is monitored. (Blinks when the set frequency is monitored.)
(e)		Monitor (5-digit LED)	Shows a numeric value (readout) of a monitor item such as the frequency or a parameter number. (The monitor item can be changed according to the settings of **Pr.52, Pr.774 to Pr.776**.)
(f)	P.RUN	PLC function indicator	Lit when the PLC function of the inverter is valid.
(g)	FWD REV	FWD key, REV key	FWD key: Starts forward rotation operation. Its LED is lit during forward operation. REV key: Starts reverse rotation operation. Its LED is lit during reverse operation. Either LED blinks under the following conditions. • When the frequency command is not given even if the forward/reverse command is given. • When the frequency command is equal to the starting frequency or lower. • When the MRS signal is being input.
(h)	STOP RESET	STOP/RESET key	Stops the operation commands. Used to reset the inverter when the protection function is activated.
(i)		Setting dial	The setting dial of the Mitsubishi Electric inverters. Turn the setting dial to change the setting of frequency or parameter, etc. Press the setting dial to perform the following operations: • To display a set frequency in the monitoring mode (The monitor item shown on the display can be changed by using **Pr.992**.) • To display the present setting during calibration • To display a fault history number in the fault history mode
(j)	MODE	MODE key	Switches the operation panel to a different mode. The easy setting of the inverter operation mode is enabled by pressing this key simultaneously with HAND AUTO. Every key on the operation panel becomes inoperable by holding this key for 2 seconds. The key inoperable function is invalid when **Pr.161**="0 (initial setting)". (Refer to the Instruction Manual (Detailed).)
(k)	SET	SET key	Confirms each selection. When this key is pressed during inverter operation, the monitor item changes. Initial setting in the monitor mode: Output frequency → Output current → Output voltage (The monitor item can be changed according to the settings of **Pr.52** and **Pr.774 to Pr.776**.)
(l)	ESC	ESC key	Goes back to the previous display. Holding this key for a longer time changes the display back to the monitor mode.
(m)	HAND AUTO	HAND/AUTO key	Switches between the PU operation mode, the PUJOG operation mode, and the External operation mode. The easy setting of the inverter operation mode is enabled by pressing this key simultaneously with MODE. Also cancels the PU stop warning.

2.7.3 Basic operation of the operation panel

For the details of each function, refer to the Instruction Manual (Detailed).

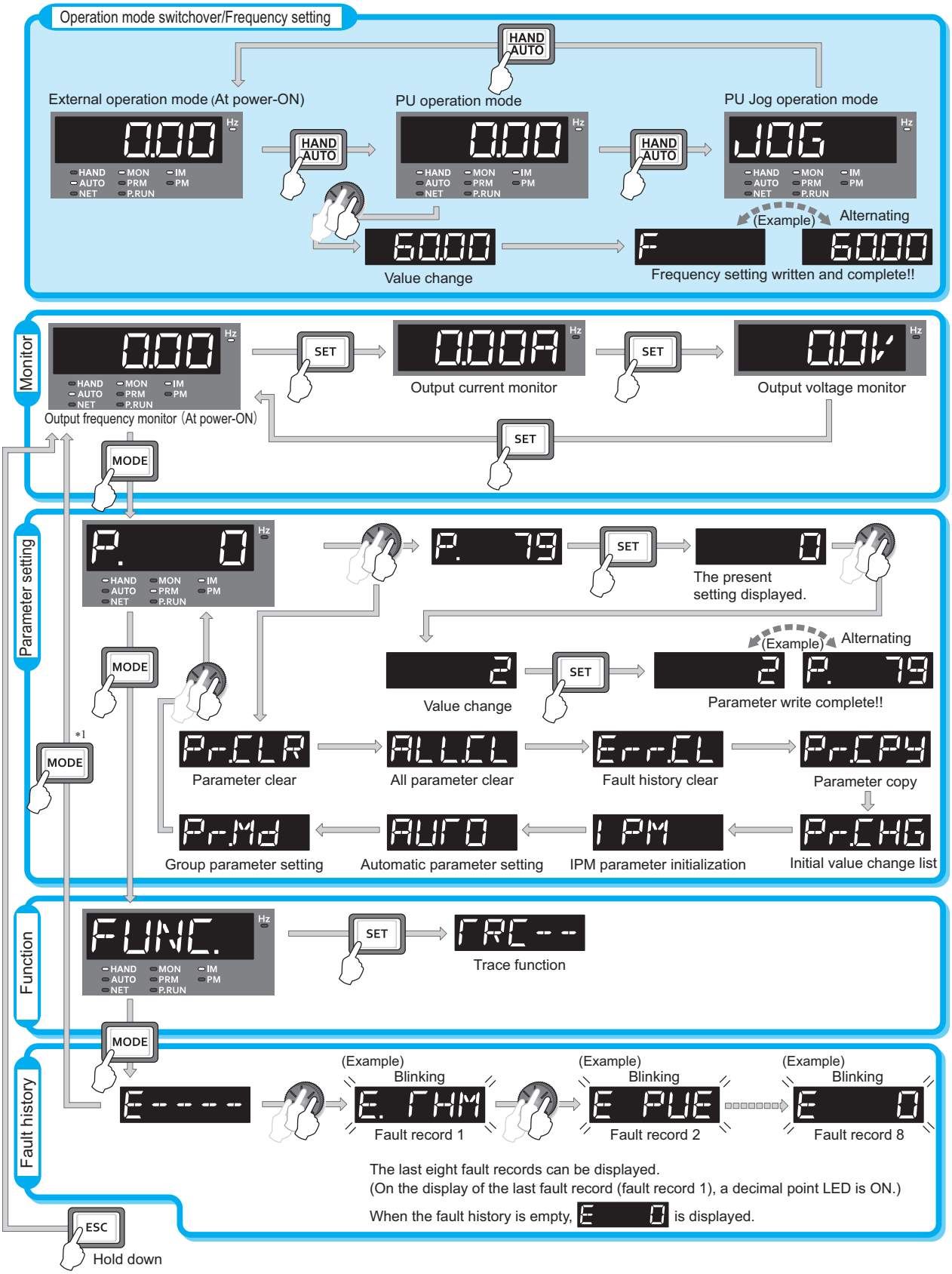

*1 The USB memory mode will appear if a USB memory device is connected. (Refer to page 51.)

2.8 Communication connectors and terminals

2.8.1 PU connector

◆Mounting the operation panel or parameter unit

- With a connection cable, the operation panel or the parameter unit can be connected to the inverter.
  Use the option FR-CB2[ ], or connectors and cables available on the market.
  (To mount the operation panel, the optional connector (FR-ADP) is required.)
  Securely insert one end of the connection cable until the stoppers are fixed.
- If the operation panel is removed from the inverter, the inverter does not conform to IP55.

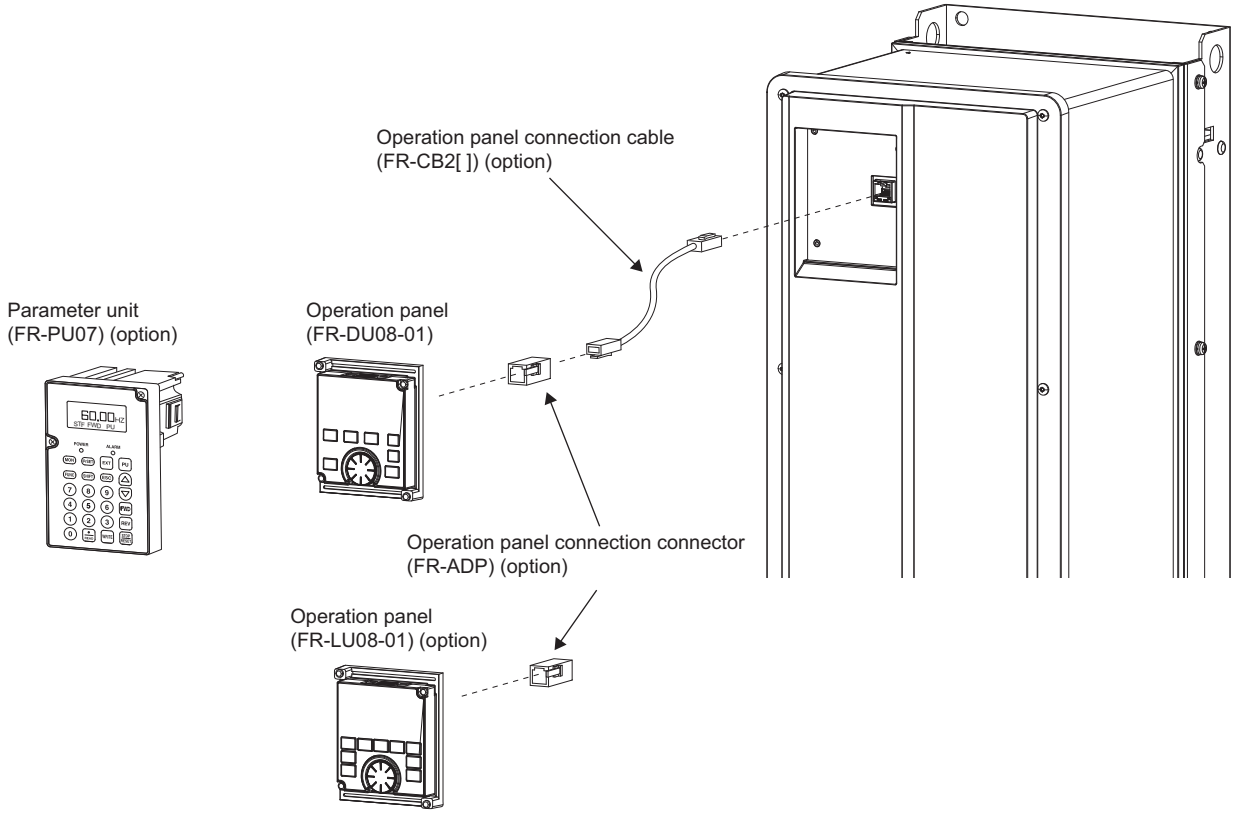

NOTE

- Refer to the following table when fabricating the cable on the user side. Keep the total cable length within 20 m.
- Commercially available products (as of February 2015)

Name	Model	Manufacturer
Communication cable	SGLPEV-T (Cat5e/300 m) 24AWG × 4P	Mitsubishi Cable Industries, Ltd.
RJ-45 connector	5-554720-3	Tyco Electronics

◆Communication operation

- Using the PU connector enables communication operation from a personal computer, etc. When the PU connector is connected with a personal, FA or other computer by a communication cable, a user program can run to monitor the inverter or read and write parameters.
  Communication can be performed with the Mitsubishi inverter protocol (computer link operation).
  For the details, refer to the Instruction Manual (Detailed).
- If the operation panel is removed from the inverter, the inverter does not conform to IP55.

◆Removal and reinstallation of the operation panel

- Loosen the four fixing screws on the operation panel and pull out the operation panel. (These screws cannot be removed.)

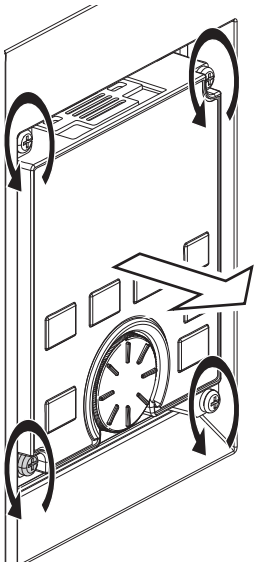

- To reinstall the operation panel, align its connector on the back with the PU connector of the inverter, and insert the operation panel. After confirming that the operation panel is fit securely, tighten the screws in the diagonal order. (Tightening torque: 0.39 to 0.49 N·m)

2.8.2 USB connector

◆Connection to the USB connectors

(1) Before removing a front cover, check to make sure that the indication of the inverter operation panel is OFF, wait for at least 10 minutes after the power supply has been switched OFF, and check that there is no residual voltage using a tester or the like.

(2) Connect a USB memory device to the USB A connector, and a USB cable to the USB mini B connector.
Refer to the following for the clearance required for the USB memory device and USB cable. They must fit in the space between each connector and the front cover.

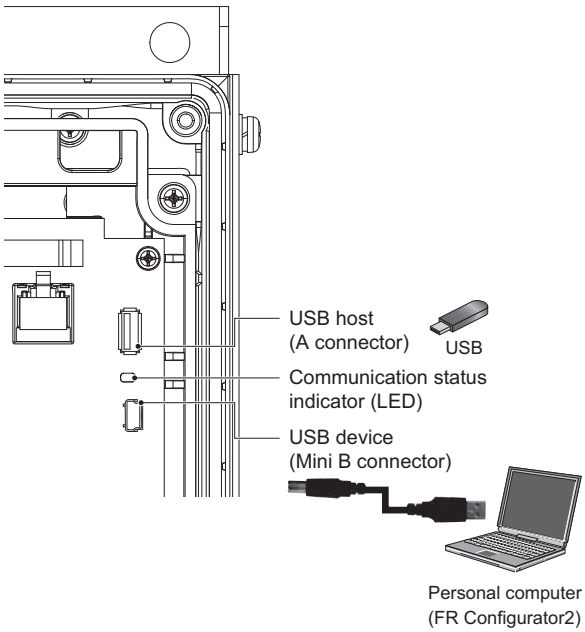

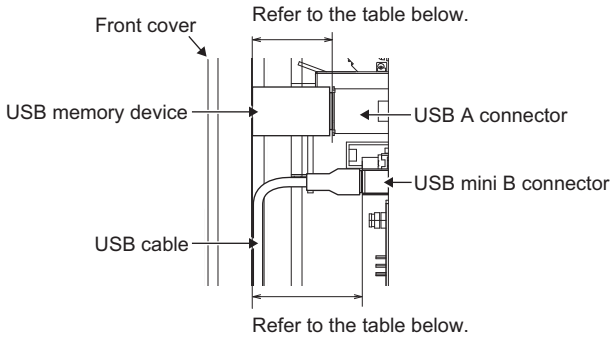

Inverter	Space between the connector and the front cover	
	USB A connector	USB mini B connector
FR-A846-00023(0.4K) to 00170(5.5K)	66 mm	75 mm
FR-A846-00250(7.5K) to 00470(18.5K)	28 mm	38 mm
FR-A846-00620(22K) to 01160(45K)	55 mm	64 mm
FR-A846-01800(55K) to 02600(90K)	41 mm	50 mm
FR-A846-03250(110K), 03610(132K)	36 mm	45 mm

◆USB host communication

Interface		Conforms to USB 1.1
Transmission speed		12 Mbps
Wiring length		Maximum 5 m
Connector		USB A connector (receptacle)
Compatible USB memory	**Format**	FAT32
	Capacity	1 GB or more (used in the recorder mode of the trace function)
	Encryption function	Not available

- Different inverter data can be saved in a USB memory device.
  The USB host communication enables the following functions.

Function	Description
Parameter copy	• Copies the parameter setting from the inverter to the USB memory device. A maximum of 99 parameter setting files can be saved in a USB memory device. • The parameter setting data copied in the USB memory device can be copied to other inverters. This function is useful in backing up the parameter setting or for sharing the parameter setting among multiple inverters. • The parameter setting file can be copied onto a personal computer from the USB memory device and edited using FR Configurator 2.
Trace	• The monitored data and output status of the signals can be saved in a USB memory device. • The saved data can be imported to FR Configurator 2 to diagnose the operating status of the inverter.
PLC function data copy	• This function copies the PLC function project data to a USB memory device when the PLC function is used. • The PLC function project data copied in the USB memory device can be copied to other inverters. • This function is useful in backing up the parameter setting and for allowing multiple inverters to operate by the same sequence programs.

- When the inverter recognizes the USB memory device without any problem, "USb.-A" is briefly displayed on the operation panel.
- When the USB memory device is removed, "USb.-- " is briefly displayed on the operation panel.
- The operating status of the USB host can be checked on the LED display of the inverter.

LED display status	Operating status
OFF	No USB connection.
ON	The communication is established between the inverter and the USB device.
Flickering rapidly	The USB memory device is being accessed. (Do not remove the USB memory device.)
Flickering slowly	Error in the USB connection.

- When a device such as a USB battery charger is connected to the USB connector and an excessive current (500 mA or more) flows, USB host error "UF " (UF warning) is displayed on the operation panel.
- When the UF warning appears, the USB error can be canceled by removing the USB device and setting **Pr.1049** = "1". (The UF warning can also be canceled by resetting the inverter power or resetting with the RES signal.)

NOTE

- Do not connect devices other than a USB memory device to the inverter.
- If a USB device is connected to the inverter via a USB hub, the inverter cannot recognize the USB memory device properly.
- For the details of the usage of the USB connector, refer to the Instruction Manual (Detailed).

◆USB device communication

The inverter can be connected to a personal computer with a USB (Ver. 1.1) cable.
Parameter setting and monitoring can be performed by FR Configurator 2.

Interface	Conforms to USB 1.1
Transmission speed	12 Mbps
Wiring length	Maximum 5 m
Connector	USB mini B connector (receptacle)
Power supply	Self-powered

NOTE

- For the details of FR Configurator 2, refer to the Instruction Manual of FR Configurator 2.

WARNING

- **While power is ON or when the inverter is running, do not open the front cover. Otherwise you may get an electric shock.**

2.8.3 RS-485 terminal block

◆Communication operation

Conforming standard	EIA-485 (RS-485)
Transmission format	Multidrop link
Communication speed	maximum 115200 bps
Overall length	500 m
Connection cable	Twisted pair cable (4 pairs)

The RS-485 terminals enable communication operation from a personal computer, etc. When the PU connector is connected with a personal, FA or other computer by a communication cable, a user program can run to monitor the inverter or read and write parameters.

Communication can be performed with the Mitsubishi inverter protocol (computer link operation) and MODBUS RTU protocol. For the details, refer to the Instruction Manual (Detailed).

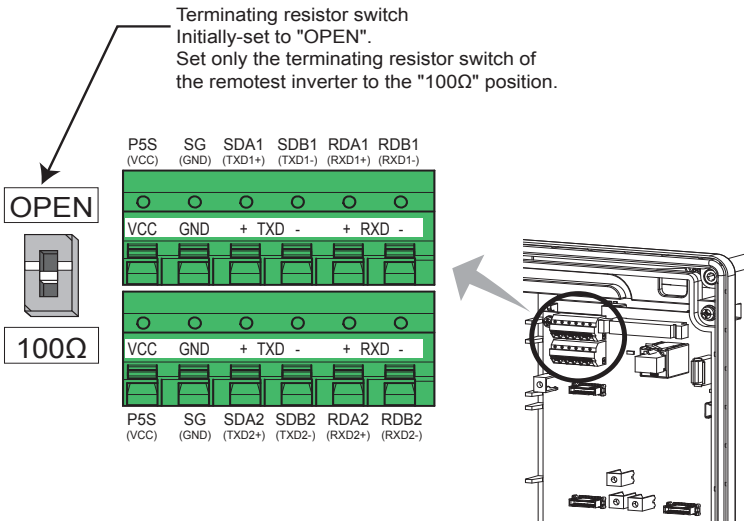

NOTE

- To avoid malfunction, keep the RS-485 terminal wires away from the control circuit board.
- When is used with a plug-in option, lead the wires on the left side of the plug-in option for wiring of the RS-485 terminals.

2.9 Connection of motor with encoder (vector control)

Using encoder-equipped motors together with a vector control compatible option enables speed, torque, and positioning control operations under orientation control, encoder feedback control, and full-scale vector control.
This section explains wiring for use of the FR-A8AP.

◆Appearance and parts name of FR-A8AP

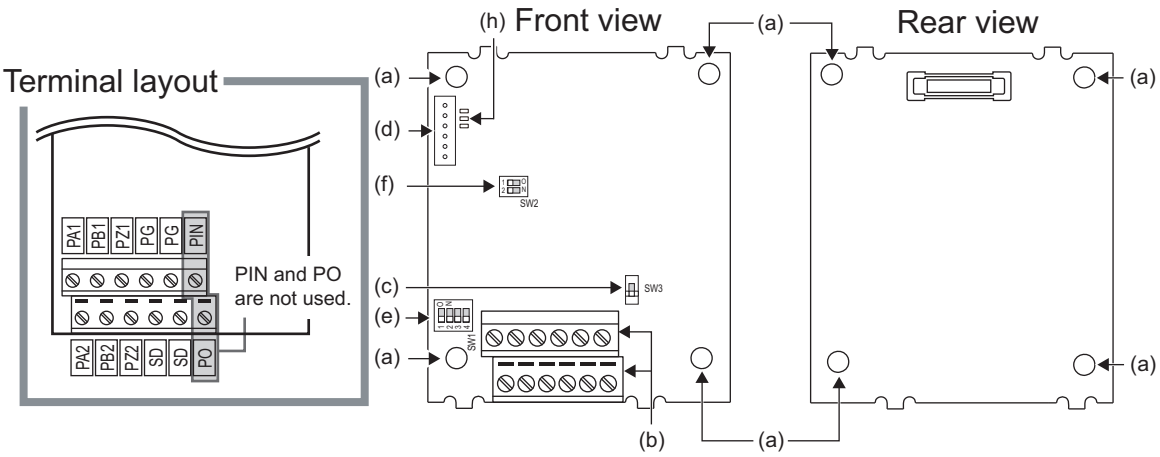

Symbol	Name	Description	Refer to page
a	Mounting hole	Used for installation to the inverter.	—
b	Terminal block	Connected with the encoder.	57
c	Encoder type selection switch (SW3)	Switches the encoder type (differential line driver/complementary).	55
d	CON2 connector	Used for extension	—
e	Terminating resistor selection switch (SW1)	Switches ON or OFF the internal terminating resistor.	55
f	Switch for manufacturer setting (SW2)	Do not change from the initially-set status. (Switches 1 and 2 are OFF .)	—
g	Connector	Connected to the option connector of the inverter.	9
h	LED for manufacturer check	Not used.	—

◆Terminals of the FR-A8AP

Terminal symbol	Terminal name	Description
PA1	Encoder A-phase signal input terminal	A-, B- and Z-phase signals are input from the encoder.
PA2	Encoder A-phase inverse signal input terminal	
PB1	Encoder B-phase signal input terminal	
PB2	Encoder B-phase inverse signal input terminal	
PZ1	Encoder Z-phase signal input terminal	
PZ2	Encoder Z-phase inverse signal input terminal	
PG	Encoder power supply (positive side) input terminal	Input terminal for the encoder power supply. Connect the external power supply (5 V, 12 V, 15 V, 24 V) and the encoder power cable. When the encoder output is the differential line driver type, only 5 V can be input. Make the voltage of the external power supply same as the encoder output voltage. (Check the encoder specification.)
SD	Encoder power supply ground terminal	
PIN	Not used.	
PO		

NOTE

- When the encoder's output voltage differs from its input power supply voltage, the signal loss detection (E.ECT) may occur.
- Incorrect wiring or faulty setting to the encoder will cause a fault such as an overcurrent (E.OC[ ]) and an inverter overload (E.THT).
  Correctly perform the encoder wiring and setting.

◆Switches of the FR-A8AP

- Encoder type selection switch (SW3)
  Selects either the differential line driver or complementary setting.
  It is initially set to the differential line driver. Switch its position according to the output circuit.

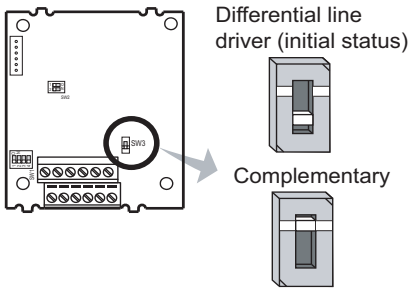

- Terminating resistor selection switch (SW1)
  Selects ON/OFF of the internal terminating resistor.
  Set the switch to ON (initial status) when an encoder output type is differential line driver, and set to OFF when complementary.
  ON: with internal terminating resistor (initial status)
  OFF: without internal terminating resistor

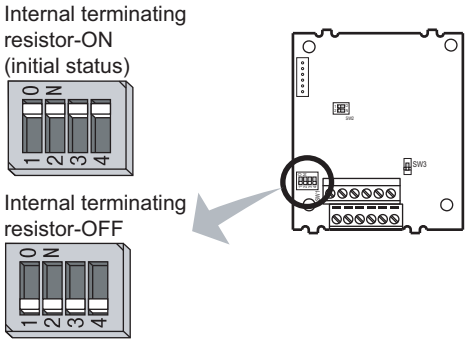

NOTE

- Set all switches to the same setting (ON/OFF).
- Set the switch "OFF" when sharing an encoder with another unit (NC (computerized numerical controller), etc.) having a terminating resistor under the differential line driver setting.

- Motor and switch setting

Motor		Encoder type selection switch (SW3)	Terminating resistor selection switch (SW1)	Power supply specification*2
Mitsubishi Electric standard motor with encoder Mitsubishi Electric high-efficiency motor with encoder	SF-JR	Differential	ON	5 V
	SF-HR	Differential	ON	5 V
	Other	*1	*1	*1*3
Mitsubishi Electric constant-torque motor with encoder	SF-JRCA	Differential	ON	5 V
	SF-HRCA	Differential	ON	5 V
	Other	*1	*1	*1*3
Vector control dedicated motor	SF-V5RU	Complementary	OFF	12 V
Other manufacturer's motor with encoder		*1	*1	*1*3

*1 Set according to the motor (encoder).
*2 Prepare an encoder's power supply (5 V/12 V/15 V/24 V) according to the encoder's output voltage. When the control terminal option FR-A8TP is installed, 24 V power supply can be provided from the FR-A8TP.
*3 When the encoder output is the differential line driver type, only 5 V can be input.

NOTE

- The SW2 switch is for manufacturer setting. Do not change the setting.
- When the power supply of the inverter is turned OFF, also turn off the power supply of the encoder. Otherwise, the plug-in option may be damaged.

- Encoder specification

Item	Encoder for SF-JR	Encoder for SF-V5RU
Resolution	1024 pulses/rev	2048 pulses/rev
Power supply voltage	5 VDC ±10%	12 VDC ±10%
Current consumption	150 mA	150 mA
Output signal form	A, B phases (90° phase shift) Z phase: 1 pulse/rev	A, B phases (90° phase shift) Z phase: 1 pulse/rev
Output circuit	Differential line driver 74LS113 equivalent	Complementary
Output voltage	H level: 2.4 V or more L level: 0.5 V or less	H level: (Power supply for encoder-3 V) or more L level: 3 V or less

◆Encoder cable

SF-JR/HR/JRCA/HRCA with encoder

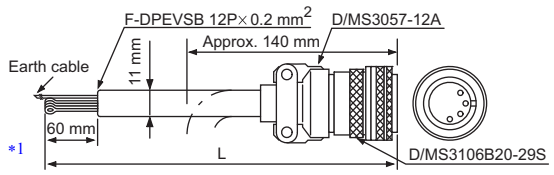

Model	Length L (m)
FR-JCBL5	5
FR-JCBL15	15
FR-JCBL30	30

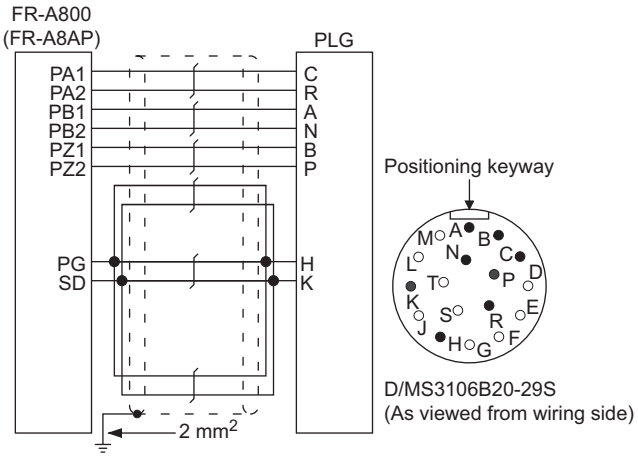

SF-V5RU, SF-THY

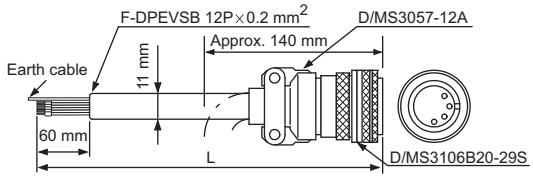

- A P clip for earthing (grounding) a shielded cable is provided.

Model	Length L (m)
FR-V7CBL5	5
FR-V7CBL15	15
FR-V7CBL30	30

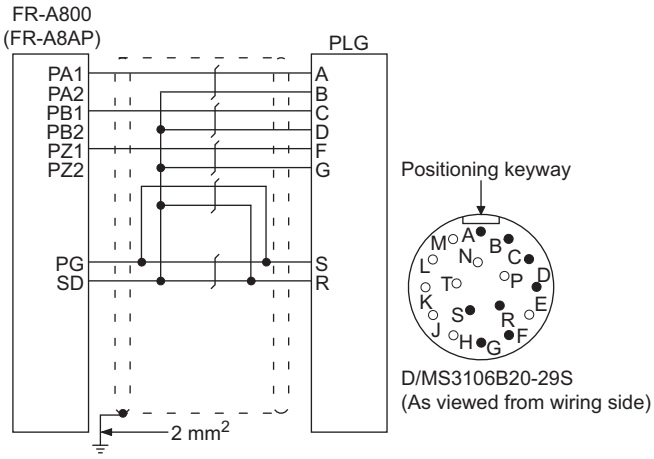

*1 As the terminal block of the FR-A8AP is an insertion type, cables need to be treated. (Refer to the following description.)

- When using an encoder cable (FR-JCBL, FR-V5CBL, etc.) dedicated to the conventional motor, cut the crimping terminal of the encoder cable and strip its sheath to make its cable wires loose.
  Also, treat the shielding wires of the shielded twisted pair cable to ensure that they will not contact conductive areas.
  Wire the stripped cable after twisting it to prevent it from becoming loose. In addition, do not solder it.

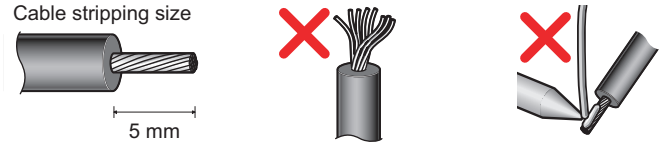

NOTE

- Information on blade terminals
  Commercially available products (as of January 2017)
  Phoenix Contact Co., Ltd.

Terminal screw size	Cable gauge (mm^2)	Ferrule terminal model		Crimping tool name
		With insulation sleeve	Without insulation sleeve	
M2	0.3	AI 0,34-6TQ	A 0,34-7	CRIMPFOX 6
	0.5	AI 0,5-6WH	A 0,5-6	

NICHIFU Co.,Ltd.

Terminal screw size	Cable gauge (mm^2)	Blade terminal product number	Insulation cap product number	Crimping tool product number
M2	0.3 to 0.75	BT 0.75-7	VC 0.75	NH 69

- When using a blade terminal (without insulation sleeve), take caution that the twisted wires do not come out.

- Connection terminal compatibility table

Motor		SF-V5RU, SF-THY	SF-JR/HR/JRCA/HRCA (with encoder)
Encoder cable		FR-V7CBL	FR-JCBL
FR-A8AP terminal	PA1	PA	PA
	PA2	Do not connect anything to this.	PAR
	PB1	PB	PB
	PB2	Do not connect anything to this.	PBR
	PZ1	PZ	PZ
	PZ2	Do not connect anything to this.	PZR
	PG	PG	5E
	SD	SD	AG2

◆Wiring example

- Speed control

Standard motor with encoder (SF-JR), 5 V differential line driver	Vector control dedicated motor (SF-V5RU, SF-THY), 12 V complementary
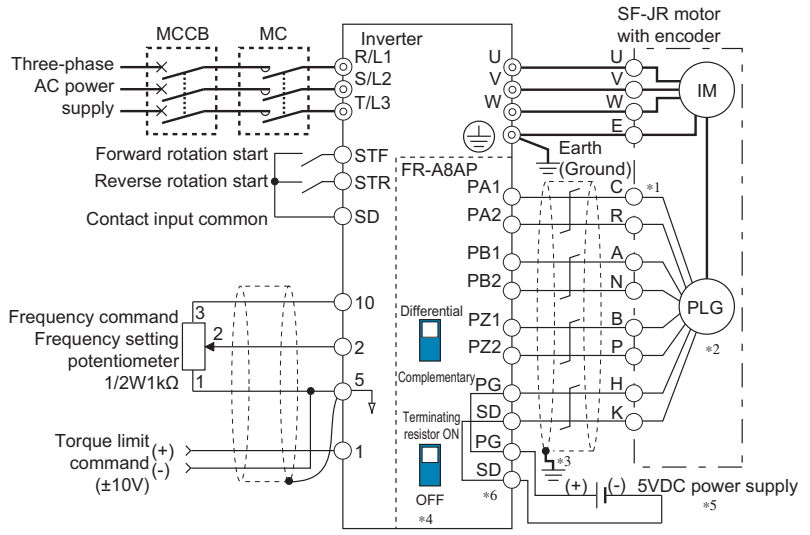	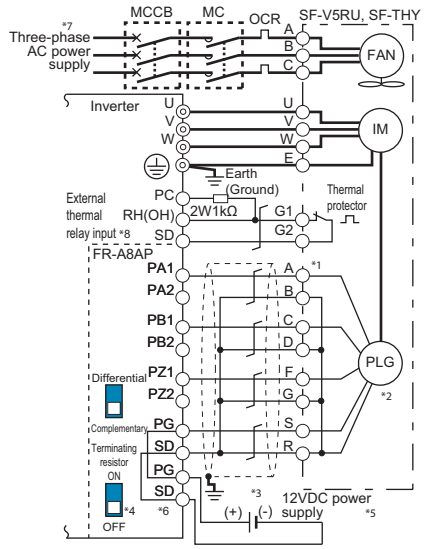

- Torque control

Standard motor with encoder (SF-JR), 5 V differential line driver	Vector control dedicated motor (SF-V5RU, SF-THY), 12 V complementary
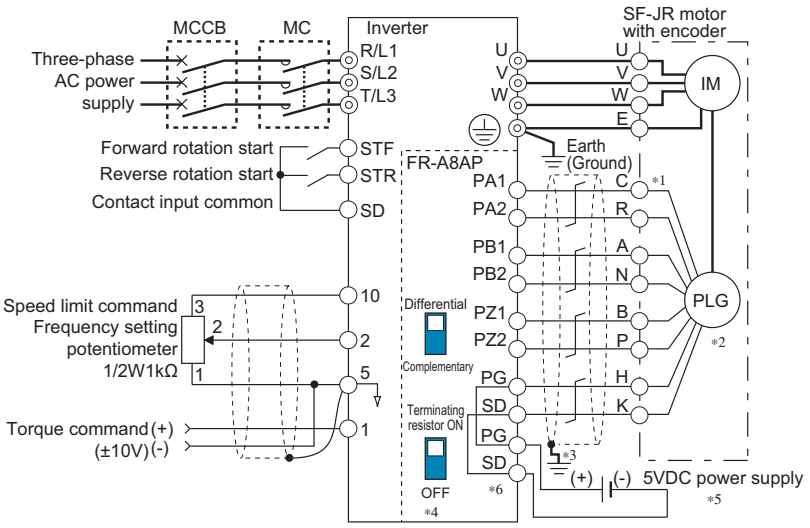	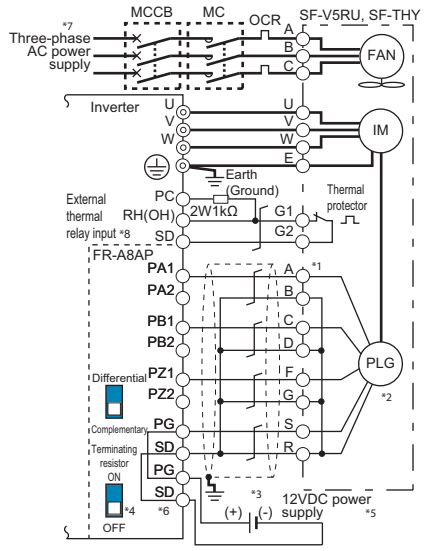

2

Connection of motor with encoder (vector control)

- Position control

Vector control dedicated motor (SF-V5RU, SF-THY), 12 V complementary

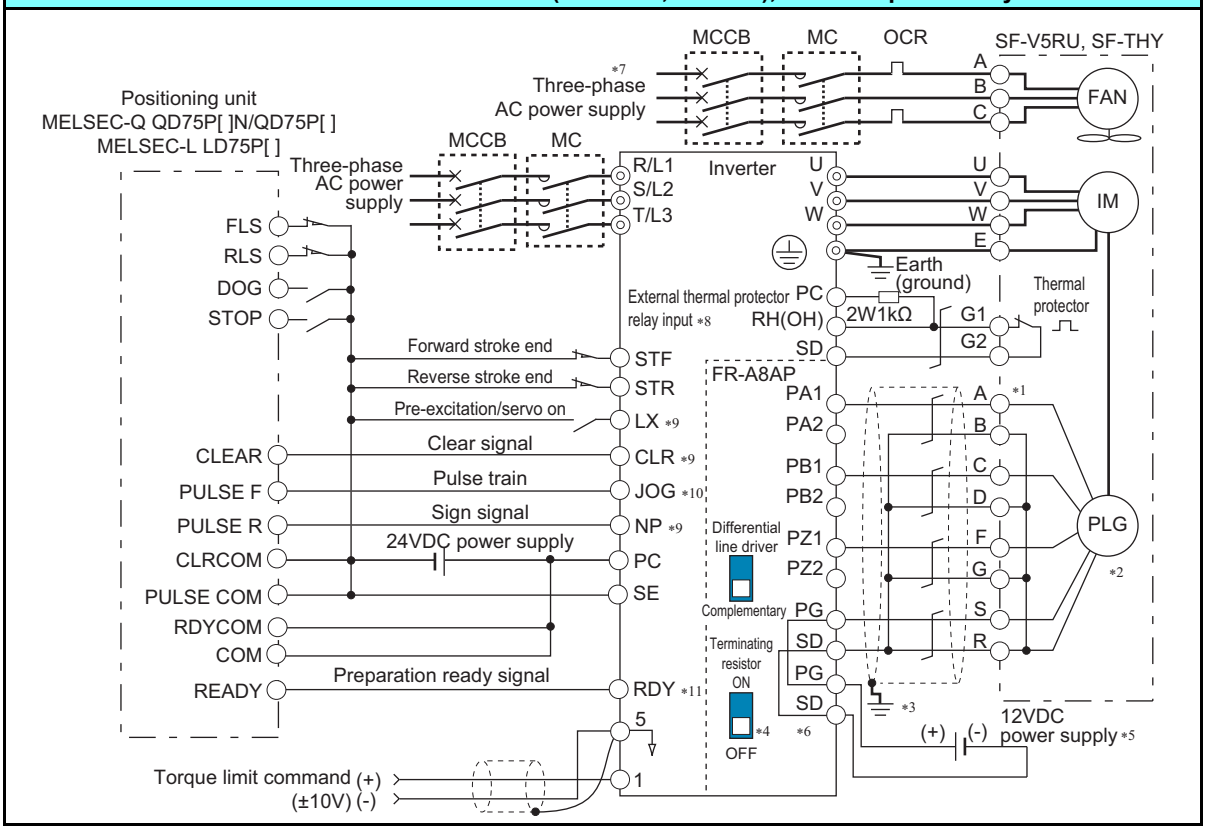

*1 The pin number differs according to the encoder used.
Speed, control, torque control, and position control by pulse train input are available with or without the Z-phase being connected.

*2 Connect the encoder so that there is no looseness between the motor and motor shaft. Speed ratio must be 1:1.

*3 Earth (ground) the shield of the encoder cable to the enclosure using a tool such as a P-clip. (Refer to page 59.)

*4 For the complementary, set the terminating resistor selection switch to OFF position. (Refer to page 55.)

*5 A separate power supply of 5 V/12 V/15 V/24 V is necessary according to the encoder power specification.
When the encoder output is the differential line driver type, only 5 V can be input.
Make the voltage of the external power supply the same as the encoder output voltage, and connect the external power supply across PG and SD.

*6 For terminal compatibility of the FR-JCBL, FR-V7CBL, and FR-A8AP, refer to page 57.

*7 For the fan of the 7.5 kW or lower dedicated motor, the power supply is single phase. (200 V/50 Hz, 200 to 230 V/60 Hz)

*8 Connect the recommended 2W1kΩ resistor between the terminal PC and OH. (Recommended product: MOS2C102J 2W1kΩ by KOA Corporation)
Insert the input line and the resistor to a 2-wire blade terminal, and connect the blade terminal to the terminal OH. (For the recommended 2-wire blade terminals, refer to page 40.)
Insulate the lead wire of the resistor, for example by applying a contraction tube, and shape the wires so that the resistor and its lead wire will not touch other cables. Caulk the lead wire securely together with the thermal protector input line using a 2-wire blade terminal. (Do not subject the lead wire's bottom area to an excessive pressure.)
To use a terminal as the terminal OH, assign the OH (external thermal O/L relay input) signal to an input terminal. (Set "7" in any of **Pr.178 to Pr.189**. For details, refer to the Instruction Manual (Detailed).)

When OH signal is assigned to terminal RH
(**Pr.182** = "7")

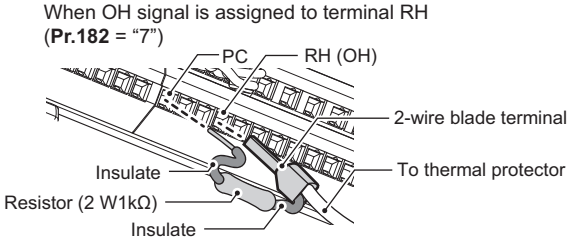

*9 Assign the function using **Pr.178 to Pr.184, Pr.187 to Pr.189 (input terminal function selection)**.

*10 When position control is selected, terminal JOG function is invalid and simple position pulse train input terminal becomes valid.

*11 Assign the function using **Pr.190 to Pr.194 (output terminal function selection)**.

◆Instructions for encoder cable wiring

- Use shielded twisted pair cables (0.2 mm^2 or larger) to connect the FR-A8AP. For the wiring to the terminals PG and SD, use several cables in parallel or use a thick cable, according to the wiring length.
  To protect the cables from noise, run them away from any source of noise (such as the main circuit and power supply voltage).

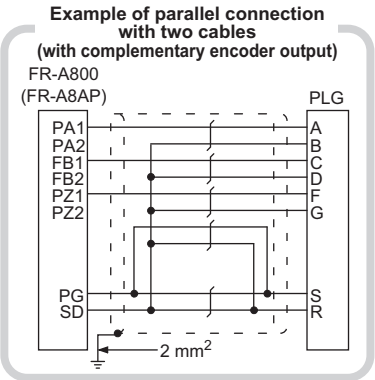

Wiring length	Parallel connection		Larger-size cable
Within 10 m	At least two cables in parallel	Cable gauge 0.2 mm^2	0.4 mm^2 or larger
Within 20 m	At least four cables in parallel		0.75 mm^2 or larger
Within 100 m *1	At least six cables in parallel		1.25 mm^2 or larger

*1 When differential line driver is set and a wiring length is 30 m or more.
The wiring length can be extended to 100 m by increasing the 5 V power supply (approximately to 5.5 V) while using six or more 0.2 mm^2 gauge cables in parallel or a 1.25 mm^2 or larger gauge cable. The voltage applied must be within power supply specifications of encoder.

- To reduce noise of the encoder cable, earth (ground) the encoder's shielded cable to the metal fitting for earthing (grounding) with a metal P-clip or U-clip. Refer to the following figure.

Earthing (grounding) example using a P-clip

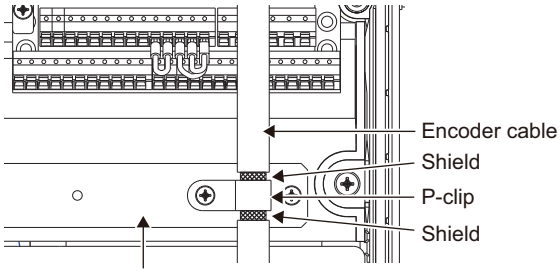

- When one encoder is shared between FR-A8AP and CNC (computerized numerical controller), its output signal should be connected as shown below. In this case, the wiring length between FR-A8AP and CNC should be as short as possible, within 5 m.

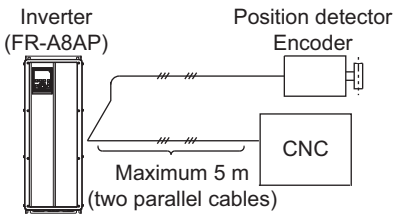

NOTE

- For the details of the optional encoder dedicated cable (FR-JCBL/FR-V7CBL), refer to page 56.
- The FR-V7CBL is provided with a P-clip for earthing (grounding) shielded cables.

2.10 Parameter settings for a motor with encoder

◆Parameter for the encoder (Pr.359, Pr.369, Pr.851, Pr.852)

- Set the encoder specifications.

Pr.		Name	Initial value	Setting range	Description	
359 C141	852 C241	Encoder rotation direction	1	0	Set when using a motor for which forward rotation (encoder) is clockwise (CW) viewed from the shaft	Set for the operation at 120 Hz or less.
				100		Set for the operation at a frequency higher than 120 Hz.
				1	Set when using a motor for which forward rotation (encoder) is counterclockwise (CCW) viewed from the shaft	Set for the operation at 120 Hz or less.
				101		Set for the operation at a frequency higher than 120 Hz.
369 C140	851 C240	Number of encoder pulses	1024	0 to 4096	Set the number of encoder pulses output. Set the number of pulses before it is multiplied by 4.	

The parameters above can be set when a vector control compatible option is installed.

- The following table shows parameters to be set according to a vector control compatible option to be used.

Item	FR-A8AP/FR-A8AL/ FR-A8APA parameter	FR-A8APR parameter	FR-A8APS parameter	FR-A8TP parameter
Encoder/Resolver rotation direction	**Pr.359**			**Pr.852**
Number of detector pulses	**Pr.369**	— (fixed 1024 pulses)	— (Obtained via communication from the encoder)	**Pr.851**

◆Parameter settings for the motor under vector control

- Values in [ ] indicate initial values.

Motor name		Pr.9 Electronic thermal O/L relay	Pr.71 Applied motor	Pr.80 Motor capacity	Pr.81 Number of motor poles	Pr.359/ Pr.852 Encoder rotation direction	Pr.369/ Pr.851 Number of encoder pulses
Mitsubishi Electric standard motor	SF-JR	Rated motor current	0	Motor capacity	Number of motor poles	1	1024
	SF-JR 4P 1.5 kW or lower	Rated motor current	20	Motor capacity	4	1	1024
	SF-HR	Rated motor current	40	Motor capacity	Number of motor poles	1	1024
	Others	Rated motor current	0 (3) *1	Motor capacity	Number of motor poles	*2	*2
Mitsubishi Electric constant-torque motor	SF-JRCA 4P	Rated motor current	1	Motor capacity	4	1	1024
	SF-HRCA	Rated motor current	50	Motor capacity	Number of motor poles	1	1024
	Others	Rated motor current	1 (13) *1	Motor capacity	Number of motor poles	*2	*2
Vector control dedicated motor	SF-V5RU (1500 r/min series)	0 *3	30	Motor capacity	4	1	2048
	SF-V5RU (except for 1500 r/min series)	0 *3	1 (13) *1	Motor capacity	4	1	2048
	SF-THY	0 *3	30 (33) *1	Motor capacity	4	1	2048
Other manufacturer's standard motor	—	Rated motor current	0 (3) *1	Motor capacity	Number of motor poles	*2	*2
Other manufacturer's constant-torque motor	—	Rated motor current	1 (13) *1	Motor capacity	Number of motor poles	*2	*2
PM motor		Refer to the instruction manual of the FR-A8APR.					

*1 Offline auto tuning is required (Refer to the Instruction Manual (Detailed).)
*2 Set this parameter according to the motor.
*3 Use the thermal protector input provided with the motor.

- When using the inverter with the SF-V5RU (1500 r/min series), refer to the table below to set **Pr.83 Rated motor voltage** and **Pr.84 Rated motor frequency**.

Motor capacity	SF-V5RU	
	Pr.83 (V)	Pr.84 (Hz)
1.5 kW	345	52
2.2 kW	360	52
3.7 kW	363	52
5.5 kW	322	51
7.5 kW	331	51
11 kW	320	51
15 kW	330	51

Motor capacity	SF-V5RU	
	Pr.83 (V)	Pr.84 (Hz)
18.5 kW	346	51
22 kW	336	51
30 kW	328	51
37 kW	332	51
45 kW	342	51
55 kW	317	51

- When using the inverter with the SF-V5RU1, SF-V5RU3, or SF-V5RU4, refer to the table below to set **Pr.83 Rated motor voltage** and **Pr.84 Rated motor frequency**.

Motor model	Pr.83 setting	Pr.84 setting
SF-V5RU1-30kW or lower	320 V	33.33 Hz
SF-V5RU1-37kW	340 V	
SF-V5RU3-22kW or lower	320 V	
SF-V5RU3-30kW	340 V	
SF-V5RU4-3.7kW and 7.5kW	300 V	16.67 Hz
SF-V5RU4 and motors other than described above	320 V	

◆Combination with the vector control dedicated motor

When using the inverter with a vector control dedicated motor, refer to the table below.

- Combination with the SF-V5RU and SF-THY (ND rating)

Voltage	400 V class		
Rated speed	1500 r/min		
Base frequency	50 Hz		
Maximum speed	3000 r/min		
Motor capacity	Motor frame number	Motor model	Inverter model FR-A846-[]
1.5 kW	90L	SF-V5RUH1K	00083(2.2K)
2.2 kW	100L	SF-V5RUH2K	00083(2.2K)
3.7 kW	112M	SF-V5RUH3K	00126(3.7K)
5.5 kW	132S	SF-V5RUH5K	00250(7.5K)
7.5 kW	132M	SF-V5RUH7K	00310(11K)
11 kW	160M	SF-V5RUH11K	00380(15K)
15 kW	160L	SF-V5RUH15K	00470(18.5K)
18.5 kW	180M	SF-V5RUH18K	00620(22K)
22 kW	180M	SF-V5RUH22K	00770(30K)
30 kW	200L*2	SF-V5RUH30K	00930(37K)
37 kW	200L*2	SF-V5RUH37K	01160(45K)
45 kW	200L*2	SF-V5RUH45K	01800(55K)
55 kW	225S*1	SF-V5RUH55K	02160(75K)
75 kW	250MD	SF-THY	02600(90K)
90 kW	250MD	SF-THY	03250(110K)
110 kW	280MD	SF-THY	03610(132K)

*1 The maximum speed is 2400 r/min.
*2 80% output in the high-speed range. (The output is reduced when the speed is 2400 r/min or faster.)

NOTE

- The SF-V5RU1 (speed ratio 1:1), SF-V5RU3 (speed ratio 1:3), and SF-V5RU4 (speed ratio 1:4) will be manufactured per order.

2.11 Connection of stand-alone option units

The inverter accepts a variety of stand-alone option units as required.
Incorrect connection will cause inverter damage or accident. Connect and operate the option unit carefully in accordance with the corresponding option unit manual.

2.11.1 Connection of the brake unit (FR-BU2)

Connect the brake unit (FR-BU2(H)) as shown below to improve the braking capability during deceleration.

◆Connection example with the GRZG type discharging resistor

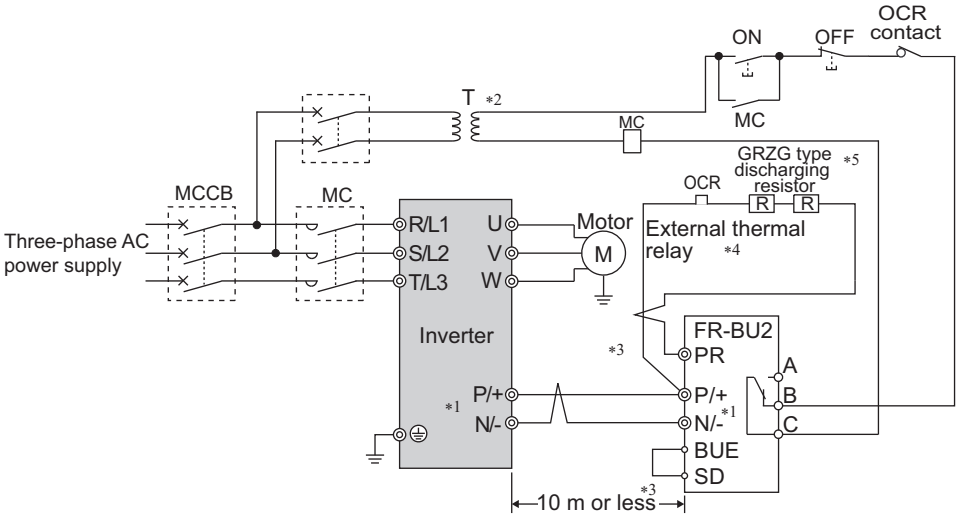

*1 When wiring, make sure to match the terminal symbol (P/+, N/-) at the inverter side and at the brake unit (FR-BU2) side. (Incorrect connection will damage the inverter and brake unit.)
*2 Install a stepdown transformer.
*3 The wiring distance between the inverter and brake unit (FR-BU2), and between the brake unit (FR-BU2) and discharging resistor must be within 5 m. Even when the wires are twisted, the cable length must be within 10 m.
*4 It is recommended to install an external thermal relay to prevent overheat of the discharging resistor.
*5 For the connection method of the discharging resistor, refer to the Instruction Manual of the FR-BU2.

- Recommended external thermal relay

Brake unit	Discharging resistor	Recommended external thermal relay
FR-BU2-H7.5K	GRZG 200-10Ω (six in series)	TH-T25-3.6A
FR-BU2-H15K	GRZG 300-5Ω (eight in series)	TH-T25-6.6A
FR-BU2-H30K	GRZG 400-2Ω (twelve in series)	TH-T25-11A

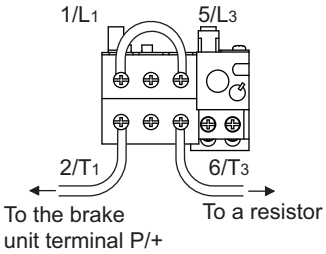

NOTE

- Set "1" in **Pr.0 Brake mode selection** of the FR-BU2 to use a GRZG type discharging resistor.
- Do not remove the jumper across terminals P/+ and P1.

◆Connection example with the FR-BR-(H) resistor unit

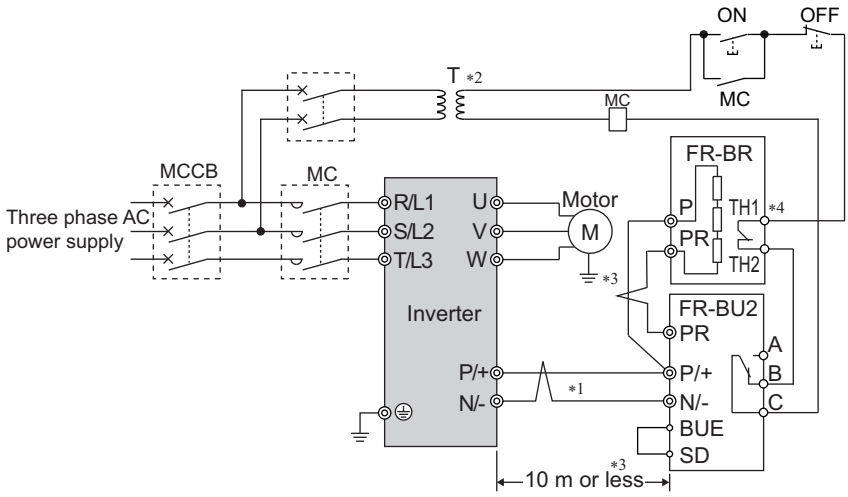

*1 When wiring, make sure to match the terminal symbol (P/+, N/-) at the inverter side and at the brake unit (FR-BU2) side. (Incorrect connection will damage the inverter and brake unit.)

*2 Install a stepdown transformer.

*3 The wiring distance between the inverter and brake unit (FR-BU2), and between the brake unit (FR-BU2) and resistor unit (FR-BR) must be within 5 m. Even when the wires are twisted, the cable length must be within 10 m.

*4 The contact between TH1 and TH2 is closed in the normal status and is open at a fault.

NOTE

- Do not remove the jumper across terminals P/+ and P1.

◆Connection example with the MT-BR5 type resistor unit

After wiring securely, set **Pr.30 Regenerative function selection** = "1 or 101" and **Pr.70 Special regenerative brake duty** = "0 (initial value)".

Set **Pr.0 Brake mode selection** = "2" in the brake unit FR-BU2.

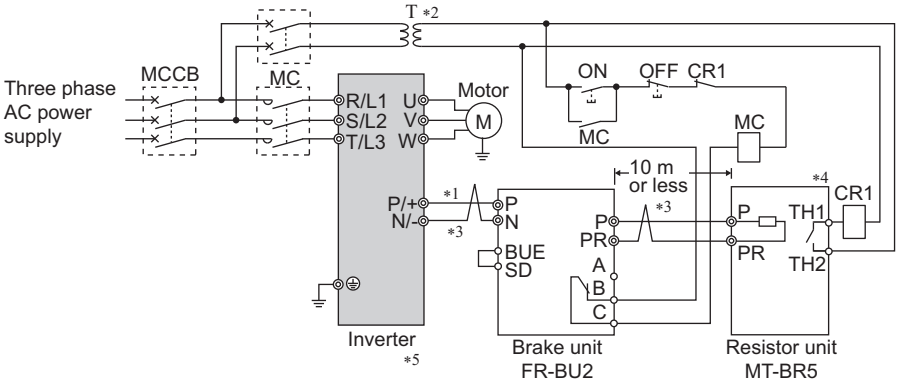

*1 When wiring, make sure to match the terminal symbol (P/+, N/-) at the inverter side and at the brake unit (FR-BU2) side. (Incorrect connection will damage the inverter and brake unit.)

*2 Install a stepdown transformer.

*3 The wiring distance between the inverter and brake unit (FR-BU2), and between the brake unit (FR-BU2) and resistor unit (MT-BR5) must be within 5 m. Even when the wire is twisted, the cable length must be within 10 m.

*4 The contact between TH1 and TH2 is open in the normal status and is closed at a fault.

*5 The CN8 connector used with the MT-BU5 type brake unit is not used.

NOTE

- The stall prevention (overvoltage), oL, does not occur while **Pr.30 Regenerative function selection** = "1 or 101" and **Pr.70 Special regenerative brake duty** = "0% (initial value)". (Refer to the Instruction Manual (Detailed).)

2.11.2 Connection of the brake unit (FR-BU)

Connect the brake unit (FR-BU(H)) as shown below to improve the braking capability during deceleration.
The FR-BU is compatible with the FR-A846-01800(55K) or lower.

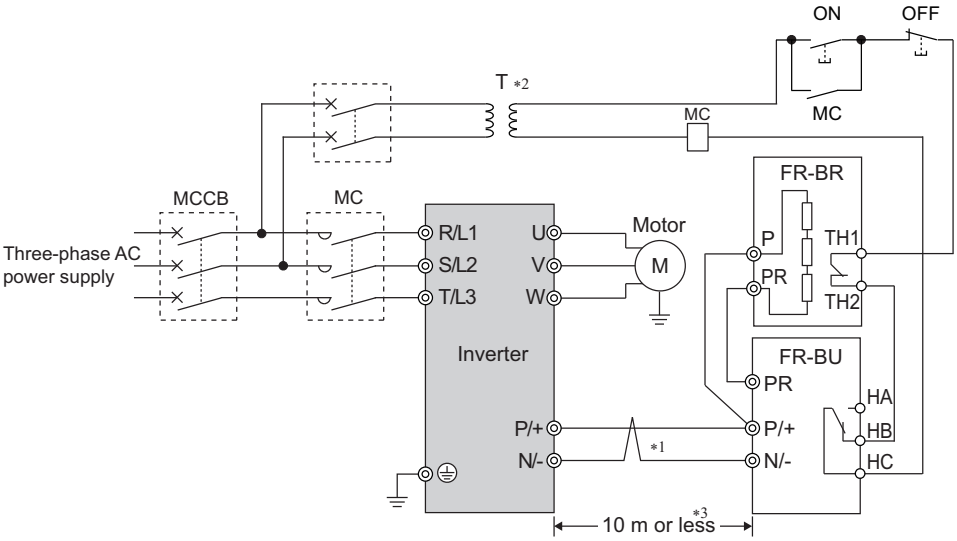

*1 When wiring, make sure to match the terminal symbol (P/+, N/-) at the inverter side and at the brake unit (FR-BU(H)) side. (Incorrect connection will damage the inverter.)
*2 Install a stepdown transformer.
*3 The wiring distance between the inverter and brake unit (FR-BU), and between the brake unit (FR-BU) and resistor unit (FR-BR) must be within 5 m. Even when the cable is twisted, the wiring length must be within 10 m.

NOTE

- If the transistors in the brake unit should becomes faulty, the resistor will overheat. Install a magnetic contactor on the inverter's input side and configure a circuit that shut off the current in case of a fault.
- Do not remove the jumper across terminals P/+ and P1.

2.11.3 Connection of the brake unit (BU type)

Connect the brake unit (BU type) correctly as shown below. Incorrect connection will damage the inverter. Remove the jumpers across terminals HB and PC and terminals TB and HC of the brake unit and fit one across terminals PC and TB. The BU type is compatible with the FR-A846-01800(55K) or lower.

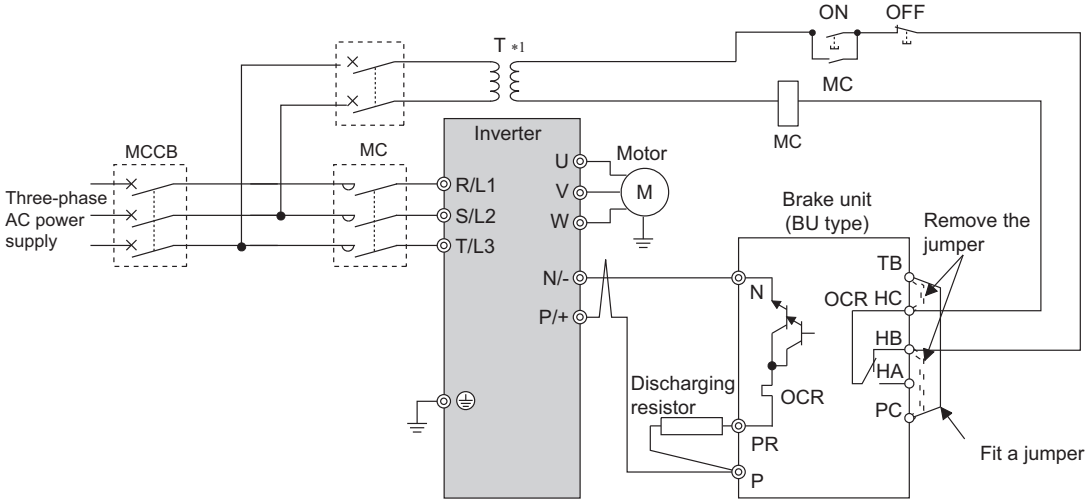

*1 Install a stepdown transformer.

NOTE

- The wiring distance between the inverter and brake unit (BU type), and between the brake unit (BU type) and discharging resistor must be within 2 m. Even when the cable is twisted, the wiring length must be within 5 m.
- If the transistors in the brake unit should becomes faulty, the resistor will overheat and result in a fire. Install a magnetic contactor on the inverter's input side and configure a circuit that shut off the current in case of a fault.
- Remove the jumper across terminals P/+ and P1.

2.11.4 Connection of the high power factor converter (FR-HC2)

When connecting the high power factor converter (FR-HC2) to suppress power harmonics, perform wiring securely as shown below. Incorrect connection will damage the high power factor converter and the inverter.

After making sure that the wiring is correct and secure, set the rated motor voltage in **Pr.19 Base frequency voltage** (under V/F control) or **Pr.83 Rated motor voltage** (under other than V/F control) and "2 or 102" in **Pr.30 Regenerative function selection**.

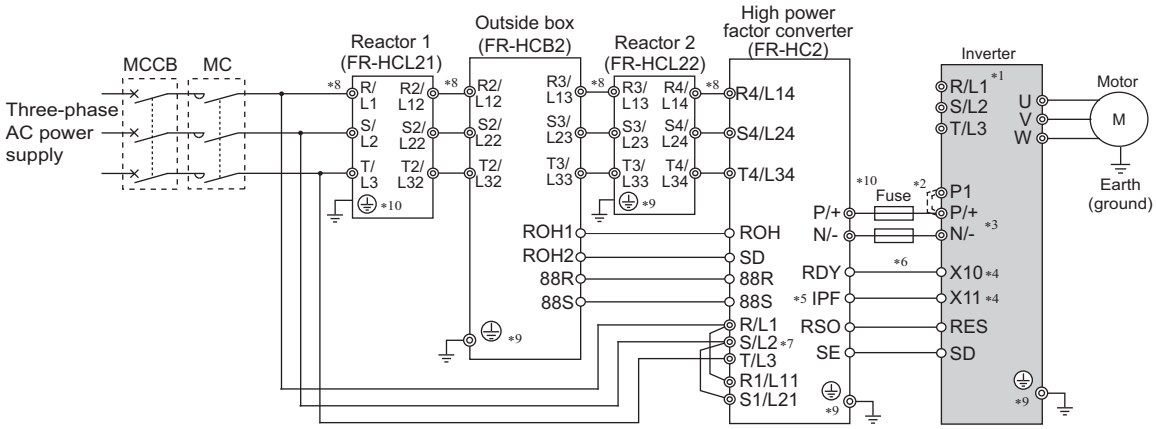

*1 Do not connect anything to power input terminals (R/L1, S/L2, T/L3). Incorrect connection will damage the inverter. (E.OPT (option fault) will occur.)

*2 Remove the jumper across terminals P/+ and P1.

*3 Do not install an MCCB across the terminals P/+ and N/- (across terminals P and P/+ or across N and N/-). Connecting the opposite polarity of terminals N/- and P/+ will damage the inverter.

*4 Use **Pr.178 to Pr.189 (input terminal function selection)** to assign the terminals used for the X10 (X11) signal.
For RS-485 or any other form of communication where the start command is only transmitted once, use the X11 signal to save the operation mode at the time of an instantaneous power failure.

*5 Assign the IPF signal to an FR-HC2 terminal. (Refer to the Instruction Manual of FR-HC2.)

*6 Always connect the FR-HC2 terminal RDY to a terminal where the X10 signal or MRS signal is assigned in the inverter. Always connect the FR-HC2 terminal SE to the inverter terminal SD. Not connecting these terminals may damage the FR-HC2.

*7 Always connect the R/L1, S/L2, and T/L3 terminals of FR-HC2 to the power supply. Operating the inverter without connecting them will damage the FR-HC2.

*8 Do not install an MCCB or MC between the reactor 1 terminals (R/L1, S/L2, T/L3) and the FR-HC2 terminals (R4/L14, S4/L24, T4/L34). It will not operate properly.

*9 Securely perform grounding (earthing) by using the grounding (earthing) terminal.

*10 Installation of a fuse is recommended. (Refer to the Instruction Manual of FR-HC2.)

NOTE

- The voltage phases of terminals R/L1, S/L2, and T/L3 and the voltage phases of terminals R4/L14, S4/L24, and T4/L34 must be matched.
- The control logic (sink logic/source logic) of the high power factor converter and the inverter must be matched. (Refer to page 38.)
- For the parameter details, refer to the Instruction Manual (Detailed).

2.11.5 Connection of the multifunction regeneration converter (FR-XC)

◆Common bus regeneration mode with harmonic suppression disabled (Pr.416 = "0")

When connecting the multifunction regeneration converter (FR-XC) to suppress power harmonics, perform wiring securely as follows. Incorrect connection will damage the multifunction regeneration converter and the inverter.

Turn ON switch 1 (connection mode setting switch) in the function selection switch assembly (SW2). If the switch setting does not match the actual wiring, the connection mode fault "E.T" occurs.

After making sure that the wiring is correct and secure, set "2 or 102" in **Pr.30 Regenerative function selection**. (Refer to the Instruction Manual (Detailed).)

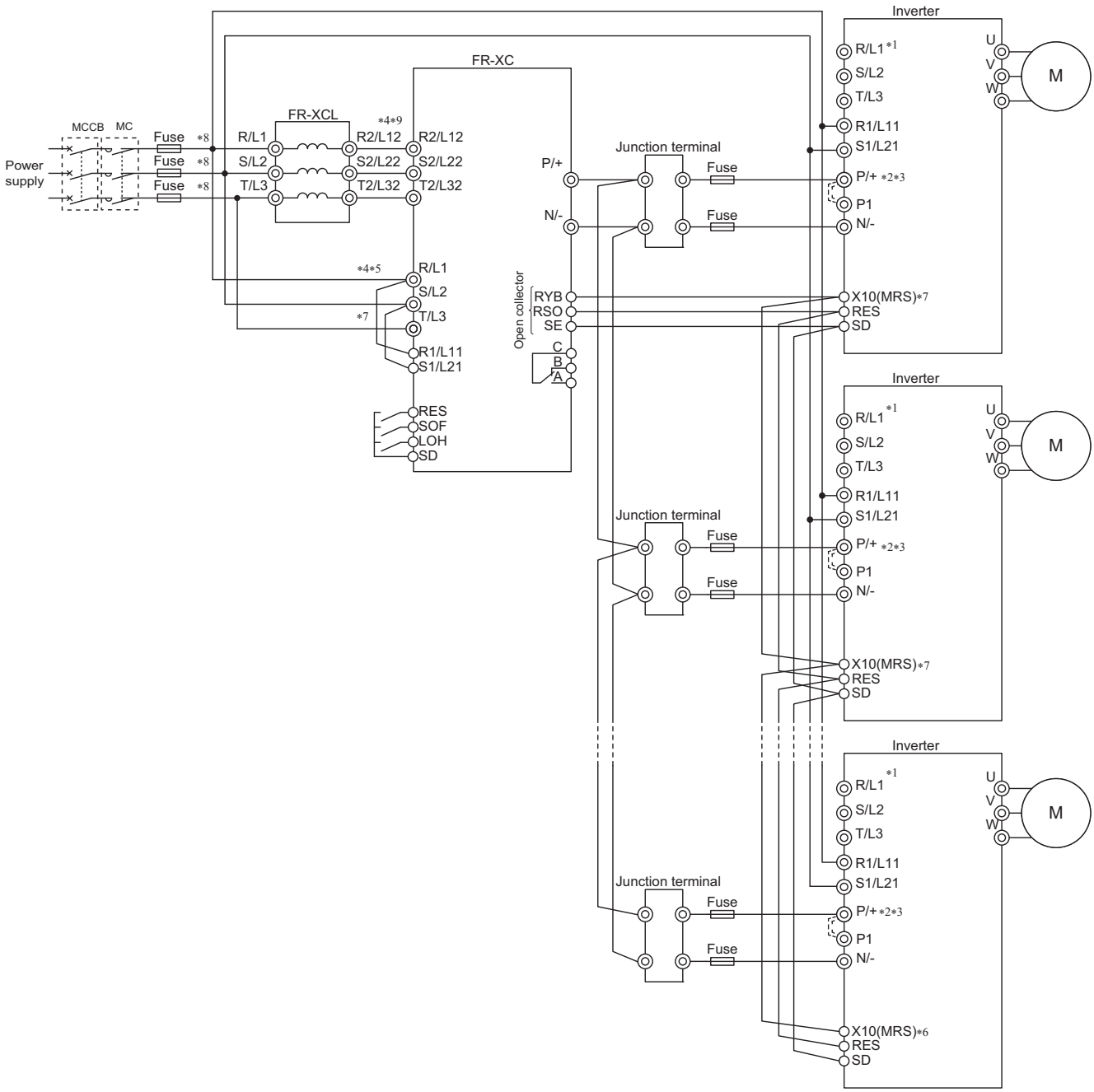

*1 Never connect the power supply to terminals R/L1, S/L2, and T/L3 on the inverter. Incorrect connection will damage the inverter and the converter.
*2 Remove the jumper across terminals P/+ and P1.
*3 Connect between the inverter terminal P/+ and the converter terminal P/+ and between the inverter terminal N/- and the converter terminal N/- for polarity consistency.
Connecting opposite polarity of terminals P/+ and N/- will damage the converter and the inverter.
*4 Confirm the correct phase sequence of three-phase current to connect between the reactor and the converter, and between the power supply and terminals R/L1, S/L2, and T/L3.
Incorrect connection will damage the converter.
*5 Be sure to connect the power supply and terminals R/L1, S/L2, and T/L3 of the converter. Operating the inverter without connecting them will damage the converter.
*6 Assign the X10 signal to any of the input terminals.
*7 To use separate power supply for the control circuit, remove each jumper at terminal R1/L11 and terminal S1/L21.
*8 Install UL listed fuses on the input side of the reactor to meet the UL/cUL standards (refer to the FR-XC Instruction Manual for information about the fuse).
*9 Do not install an MCCB or MC between the reactor and the converter. Doing so disrupts proper operation.

⚠ CAUTION

- **In the common bus regeneration mode, always connect between the converter terminal RYB and the inverter terminal to which the X10 (MRS) signal is assigned and between the converter terminal SE and the inverter terminal SD. If the terminals are not connected, the converter may be damaged.**

◆Common bus regeneration mode with harmonic suppression enabled (Pr.416 = "1")

When connecting the multifunction regeneration converter (FR-XC) to suppress power harmonics, perform wiring securely as follows. Incorrect connection will damage the multifunction regeneration converter and the inverter.

Turn ON switch 1 (connection mode setting switch) in the function selection switch assembly (SW2). If the switch setting does not match the actual wiring, the connection mode fault "E.T" occurs.

After making sure that the wiring is correct and secure, set the rated motor voltage in **Pr.19 Base frequency voltage** (under V/F control) or **Pr.83 Rated motor voltage** (under other than V/F control) and "2 or 102" in **Pr.30 Regenerative function selection**. (Refer to the Instruction Manual (Detailed).)

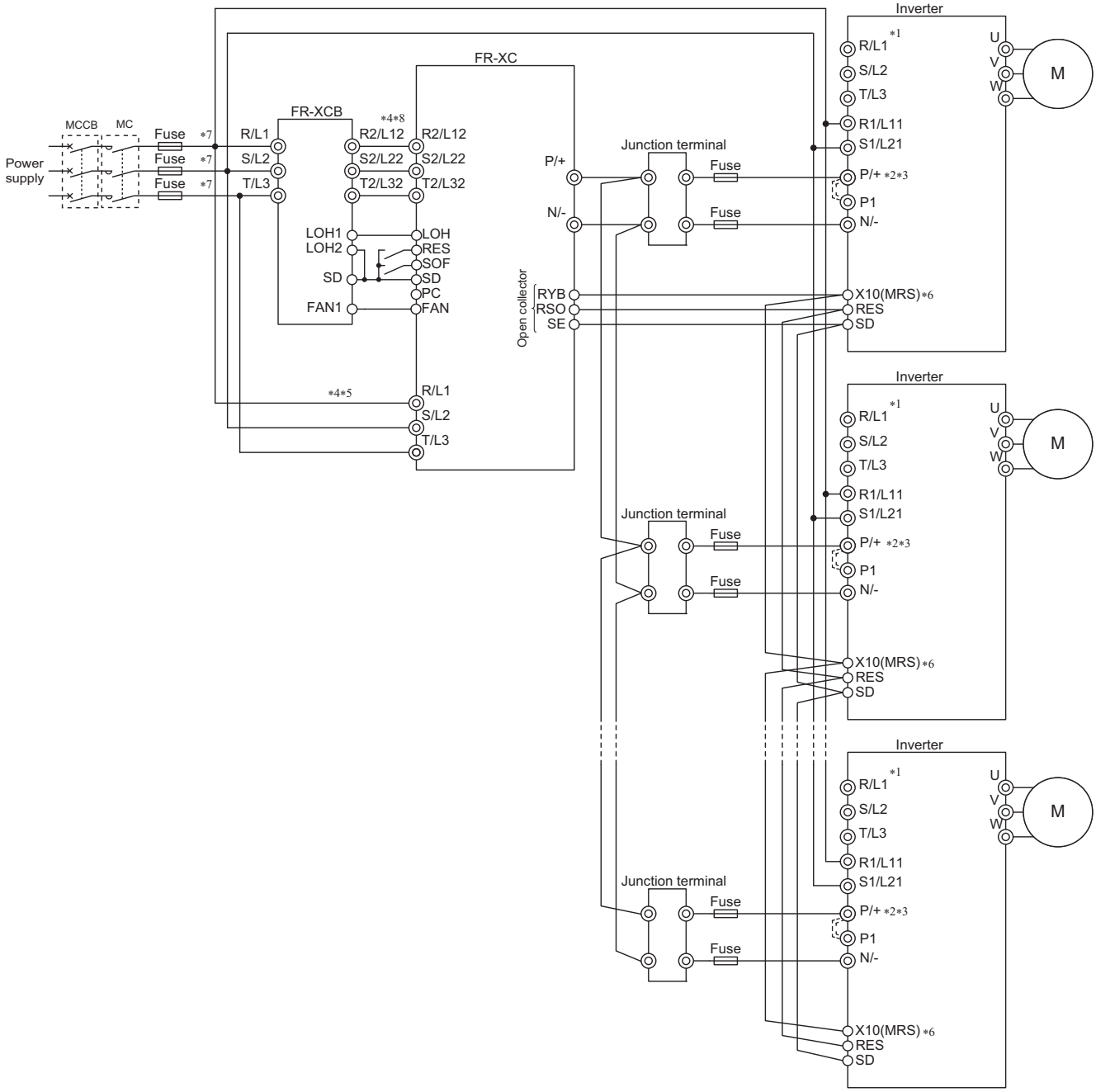

*1 Never connect the power supply to terminals R/L1, S/L2, and T/L3 on the inverter. Incorrect connection will damage the inverter and the converter.
*2 Connect between the inverter terminal P/+ and the converter terminal P/+ and between the inverter terminal N/- and the converter terminal N/- for polarity consistency. Connecting opposite polarity of terminals P/+ and N/- will damage the converter and the inverter.
*3 Remove the jumper across terminals P/+ and P1.
*4 Confirm the correct phase sequence of three-phase current to connect between the reactor and the converter, and between the power supply and terminals R/L1, S/L2, and T/L3.
Incorrect connection will damage the converter.
*5 Be sure to connect the power supply and terminals R/L1, S/L2, and T/L3 of the converter. Operating the inverter without connecting them will damage the converter.
*6 Assign the X10 signal to any of the input terminals.
*7 Install UL listed fuses on the input side of the FR-XCB reactor to meet the UL/cUL standards (refer to the FR-XC Instruction Manual for information about the fuse).
*8 Do not install an MCCB or MC between the reactor and the converter. Doing so disrupts proper operation.

CAUTION

- **In the common bus regeneration mode, always connect between the converter terminal RYB and the inverter terminal to which the X10 (MRS) signal is assigned and between the converter terminal SE and the inverter terminal SD. If the terminals are not connected, the converter may be damaged.**

NOTE

- The control logic (sink logic/source logic) of the converter and the inverter must be matched. The converter does not operate properly if the control logic is not consistent with each other.
- (Refer to page 39 for the switching of the control logic. Refer to the FR-XC Instruction Manual for the switching of the control logic of the converter.)
- Keep the wiring length between terminals as short as possible.
- When the power is distorted or falls off sharply, the reactors may generate abnormal acoustic noise. This acoustic noise is caused by the power supply fault and not by the damage of the converter.

◆Power regeneration mode

When connecting the multifunction regeneration converter (FR-XC) to suppress power harmonics, perform wiring securely as follows. Incorrect connection will damage the multifunction regeneration converter and the inverter.
Turn OFF switch 1 (connection mode setting switch) in the function selection switch assembly (SW2). If the switch setting does not match the actual wiring, the connection mode fault "E.T" occurs.
After making sure that the wiring is correct and secure, set "0 or 100" in **Pr.30 Regenerative function selection**. (Refer to the Instruction Manual (Detailed).)

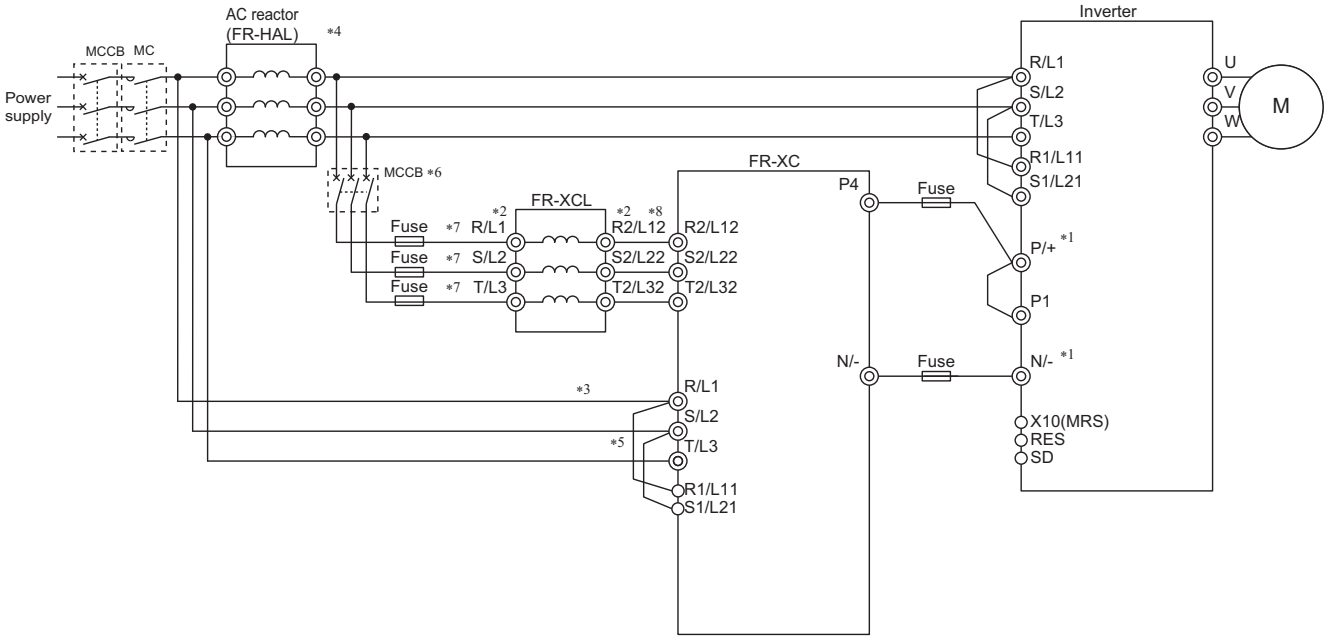

*1 Connect between the inverter terminal P/+ and the converter terminal P4 and between the inverter terminal N/- and the converter terminal N/- for polarity consistency.
Connecting opposite polarity of terminals P/+ and N/- will damage the converter and the inverter.
*2 Confirm the correct phase sequence of three-phase current to connect between the reactor and the converter, and between the power supply and the reactor.
Incorrect connection will damage the converter.
*3 Be sure to connect the power supply and terminals R/L1, S/L2, and T/L3 of the converter. Operating the inverter without connecting them will damage the converter. A branch point to each of these terminals must be placed between the power supply and the AC reactor.
*4 Install the AC reactor between the node points joined to the converter terminals R/L1, S/L2, and T/L3 and the node points joined to the FR-XCL reactor. To select an appropriate model, refer to the FR-XC Instruction Manual.
*5 To use separate power supply for the control circuit, remove each jumper at terminal R1/L11 and terminal S1/L21.
*6 To select an appropriate MCCB, refer to the FR-XC Instruction Manual.
*7 Install UL listed fuses on the input side of the reactor to meet the UL/cUL standards (refer to the FR-XC Instruction Manual for information about the fuse).
*8 Do not install an MCCB or MC between the reactor and the converter. Doing so disrupts proper operation.

2.11.6 Connection of the power regeneration common converter (FR-CV)

When connecting the power regeneration common converter (FR-CV), connect the inverter terminals (P/+, N/-) and the power regeneration common converter (FR-CV) terminals as shown below so that their symbols match with each other.
The FR-CV is applicable to FR-A846-01800(55K) or lower.
After making sure that the wiring is correct, set "2" in **Pr.30 Regenerative function selection**.

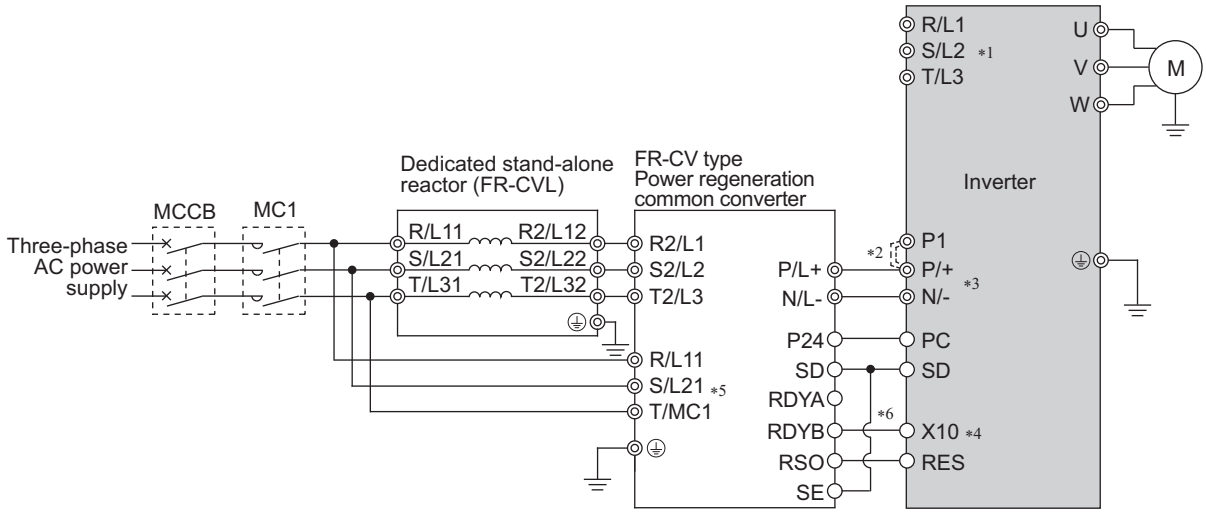

*1 Do not connect anything to power input terminals (R/L1, S/L2, T/L3). Incorrect connection will damage the inverter. (E.OPT (option fault) will occur.
*2 Remove the jumper across terminals P/+ and P1.
*3 Do not insert an MCCB between terminals P/+ and N/- (between terminals P/L+ and P/+ or between N/L- and N/-). Connecting the opposite polarity of terminals N/- and P/+ will damage the inverter.
*4 Use **Pr.178 to Pr.189 (input terminal function selection)** to assign the terminals used for the X10 signal.
*5 Be sure to connect the power supply and terminals R/L11, S/L21, and T/MC1. Operating the inverter without connecting them will damage the power regeneration common converter.
*6 Always connect terminal RDYB of the FR-CV to the inverter terminal where the X10 signal or the MRS signal is assigned to. Always connect terminal SE of the FR-CV to the inverter terminal SD. Not connecting these terminals may damage the FR-CV.

NOTE

- The voltage phases of terminals R/L11, S/L21, and T/MC1 and the voltage phases of terminals R2/L1, S2/L2, and T2/L3 must be matched.
- Use the sink logic (initial setting for the FM type) when the FR-CV is connected. It cannot be connected when the source logic is selected.
- For the parameter details, refer to the Instruction Manual (Detailed).

2.11.7 Connection of the power regeneration converter (MT-RC)

When connecting the power regeneration converter (MT-RC), perform wiring securely as shown below. Incorrect connection will damage the power regeneration converter and the inverter. The MT-RC is applicable to FR-A846-02160(75K) or higher. After making sure that the wiring is correct, set "1" in **Pr.30 Regenerative function selection** and "0" in **Pr.70 Special regenerative brake duty**.

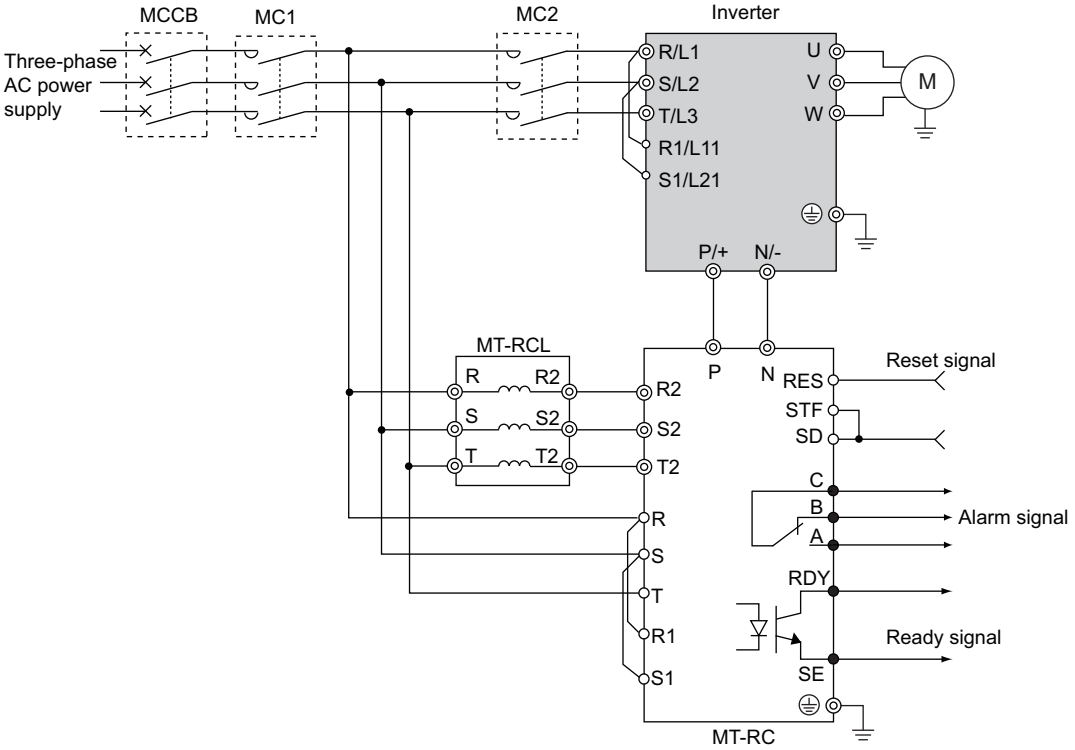

NOTE

- When using the inverter with the MT-RC, install a magnetic contactor (MC) at the input side of the inverter so that power is supplied to the inverter after 1 s or more has elapsed after powering ON the MT-RC. When power is supplied to the inverter prior to the MT-RC, the inverter and the MT-RC may be damaged or the MCCB may trip or be damaged.
- When connecting the power coordination reactor and others, refer to Instruction Manual of the MT-RC for precautions.

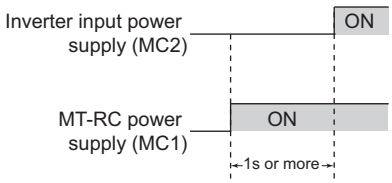

MEMO

3 PRECAUTIONS FOR USE OF THE INVERTER

This chapter explains the precautions for use of this product.
Always read the instructions before using the equipment.

3.1 Electro-magnetic interference (EMI) and leakage currents ..76
3.2 Power supply harmonics 82
3.3 Installation of a reactor 85
3.4 Power-OFF and magnetic contactor (MC) 86
3.5 Countermeasures against deterioration of the 400 V class motor insulation.....87
3.6 Checklist before starting operation 88
3.7 Failsafe system which uses the inverter 90

3.1 Electro-magnetic interference (EMI) and leakage currents

3.1.1 Leakage currents and countermeasures

Capacitances exist between the inverter I/O cables, other cables and earth and in the motor, through which a leakage current flows. Since its value depends on the static capacitances, carrier frequency, etc., low acoustic noise operation at the increased carrier frequency of the inverter will increase the leakage current. Therefore, take the following countermeasures. Select the earth leakage current breaker according to its rated sensitivity current, independently of the carrier frequency setting.

◆To-earth (ground) leakage currents

Leakage currents may flow not only into the inverter's own line but also into the other lines through the earthing (grounding) cable, etc. These leakage currents may operate earth leakage circuit breakers and earth leakage relays unnecessarily.

●Suppression technique

- If the carrier frequency setting is high, decrease the **Pr.72 PWM frequency selection** setting.
  Note that motor noise increases. Selecting **Pr.240 Soft-PWM operation selection** makes the sound inoffensive.
- By using earth leakage circuit breakers designed for harmonic and surge suppression in the inverter's own line and other line, operation can be performed with the carrier frequency kept high (with low noise).

●To-earth (ground) leakage currents

- Take caution as long wiring will increase the leakage current. Decreasing the carrier frequency of the inverter reduces the leakage current.
- Increasing the motor capacity increases the leakage current.

◆Line-to-line leakage currents

Harmonics of leakage currents flowing in static capacitances between the inverter output cables may operate the external thermal relay unnecessarily. When the wiring length is long (50 m or more) for small-capacity models (FR-A846-00250(7.5K) or lower), the external thermal relay is likely to operate unnecessarily because the ratio of the leakage current to the rated motor current increases.

●Line-to-line leakage current example

Motor capacity (kW)	Rated motor current (A)	Leakage current (mA)	
		Wiring length 50 m	Wiring length 100 m
0.4	1.8	620	1000
0.75	3.2	680	1060
1.5	5.8	740	1120
2.2	8.1	800	1180
3.7	12.8	880	1260
5.5	19.4	980	1360
7.5	25.6	1070	1450

- Motor: SF-JR 4P
- Carrier frequency: 14.5 kHz
- Cable: 2 mm^2, 4 cores
- Cabtyre cable

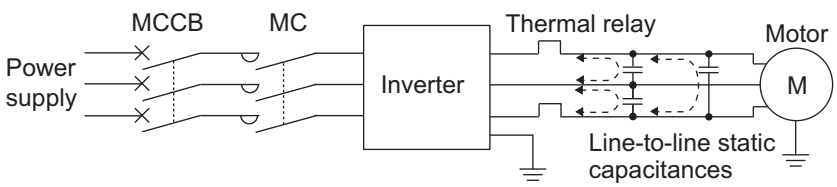

Line-to-line leakage currents path

●Countermeasures

- Use **Pr.9 Electronic thermal O/L relay**.
- If the carrier frequency setting is high, decrease the **Pr.72 PWM frequency selection** setting.
  Note that motor noise increases. Selecting **Pr.240 Soft-PWM operation selection** makes the sound inoffensive.
  To ensure that the motor is protected against line-to-line leakage currents, it is recommended to use a temperature sensor to directly detect motor temperature.

●Installation and selection of the molded case circuit breaker

Install a molded case circuit breaker (MCCB) on the power receiving side to protect the wiring at the inverter input side. Select an MCCB according to the inverter input side power factor, which depends on the power supply voltage, output frequency and load. Especially for a completely electromagnetic MCCB, a slightly large capacity must be selected since its operation characteristic varies with harmonic currents. (Check it in the data of the corresponding breaker.) As an earth leakage current breaker, use the Mitsubishi earth leakage current breaker designed for harmonics and surge suppression.

◆Selecting the rated sensitivity current for the earth leakage circuit breaker

When using an earth leakage circuit breaker with the inverter circuit, select its rated sensitivity current as follows, independently of the PWM carrier frequency.

- Breaker designed for harmonic and surge suppression
  Rated sensitivity current
  $I\Delta n \geq 10 \times (Ig1 + Ign + Igi + Ig2 + Igm)$
- Standard breaker
  Rated sensitivity current
  $I\Delta n \geq 10 \times \{Ig1 + Ign + Igi + 3 \times (Ig2 + Igm)\}$

Ig1, Ig2: Leakage currents in wire path during commercial power supply operation
Ign: Leakage current of inverter input side noise filter
Igm: Leakage current of motor during commercial power supply operation
Igi: Leakage current of inverter unit

Example of leakage current per 1km during the commercial power supply operation when the CV cable is routed in metal conduit

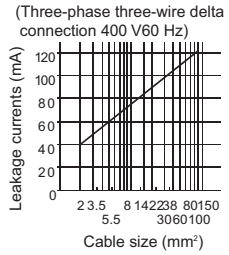

Leakage current example of three-phase induction motor during the commercial power supply operation

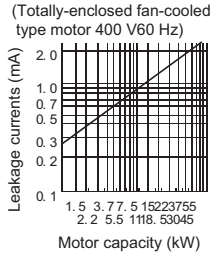

For "⅄" connection, the amount of leakage current is appox.1/3 of the above value.

<Example>

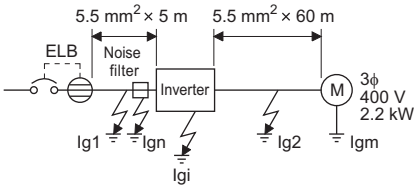

Item	Breaker designed for harmonic and surge suppression	Standard breaker
Leakage current Ig1 (mA)	$\frac{1}{3} \times 66 \times \frac{5\ m}{1000\ m} = 0.11$	
Leakage current Ign (mA)	0 (without noise filter)	
Leakage current Igi (mA)	1 (without EMC filter) For the leakage current of the inverter, refer to the following table.	
Leakage current Ig2 (mA)	$\frac{1}{3} \times 66 \times \frac{60\ m}{1000\ m} = 1.32$	
Motor leakage current Igm (mA)	0.36	
Total leakage current (mA)	2.79	6.15
Rated sensitivity current (mA) (≥ Ig × 10)	30	100

- Inverter leakage current (with and without EMC filter)
  Input power conditions (400 V class: 440 V/60 Hz, power supply unbalance within 3%)

	Voltage (V)	EMC filter (C3)		EMC filter (C2)
		ON (mA)	OFF (mA)	ON (mA)*1
Phase earthing (grounding)	**400**	35	2	—*2
Earthed-neutral system 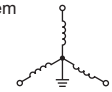	**400**	2	1	2

*1 Do not change the initially set ON (enabled) position of the EMC filter ON/OFF connector in the case of the inverter with a built-in C2 filter. The Class C2 compatibility condition is not satisfied with the EMC filter OFF. The FR-A846-00250(7.5K)-C2 to FR-A846-00470(18.5K)-C2 are not provided with the EMC filter ON/OFF connector. The EMC filter is always ON.

*2 The inverter with a built-in C2 filter must be used in the earthed-neutral system.

NOTE

- Install the earth leakage circuit breaker (ELB) on the input side of the inverter.
- In the 人 connection earthed-neutral system, the sensitivity current is blunt against a ground fault in the inverter output side. Earthing (Grounding) must conform to the requirements of national and local safety regulations and electrical codes. (NEC section 250, IEC 61140 class 1 and other applicable standards)
- When the breaker is installed on the output side of the inverter, it may be unnecessarily operated by harmonics even if the effective value is within the rating.
  In this case, do not install the breaker since the eddy current and hysteresis loss will increase, leading to temperature rise.
- The following models are standard breakers: BV-C1, BC-V, NVB, NV-L, NV-G2N, NV-G3NA, NV-2F, earth leakage relay (except NV-ZHA), and NV with AA neutral wire open-phase protection. The other models are designed for harmonic and surge suppression: NV-C/NV-S/MN series, NV30-FA, NV50-FA, BV-C2, earth leakage alarm breaker (NF-Z), NV-ZHA, and NV-H.

3.1.2 Countermeasures against inverter-generated EMI

Some electromagnetic noises enter the inverter to cause the inverter malfunction, and others are radiated by the inverter to cause the peripheral devices to malfunction. Though the inverter is designed to have high immunity performance, it handles low-level signals, so it requires the following basic techniques. Also, since the inverter chops outputs at high carrier frequency, that could generate electromagnetic noises. If these electromagnetic noises cause peripheral devices to malfunction, EMI countermeasures should be taken to suppress noises. These techniques differ slightly depending on EMI paths.

- Basic techniques
  - Do not run the power cables (I/O cables) and signal cables of the inverter in parallel with each other and do not bundle them.
  - Use shielded twisted pair cables for the detector connecting and control signal cables and connect the sheathes of the shielded cables to terminal SD.
  - Ground (Earth) the inverter, motor, etc. at one point.
- Techniques to reduce electromagnetic noises that enter and cause a malfunction of the inverter (EMI countermeasures)
  When devices that generate many electromagnetic noises (which use magnetic contactors, electromagnetic brakes, many relays, for example) are installed near the inverter and the inverter may malfunction due to electromagnetic noises, the following countermeasures must be taken:
  - Provide surge suppressors for devices that generate many electromagnetic noises to suppress electromagnetic noises.
  - Install data line filters (page 79) to signal cables.
  - Ground (Earth) the shields of the detector connection and control signal cables with cable clamp metal.
- Techniques to reduce electromagnetic noises that are radiated by the inverter to cause the peripheral devices to malfunction (EMI countermeasures)
  Inverter-generated noises are largely classified into those radiated by the cables connected to the inverter and inverter main circuits (I/O), those electromagnetically and electrostatically induced to the signal cables of the peripheral devices close to the main circuit power supply, and those transmitted through the power supply cables.

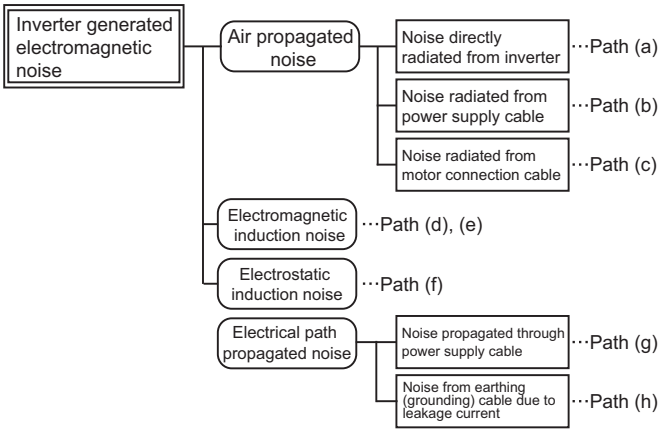

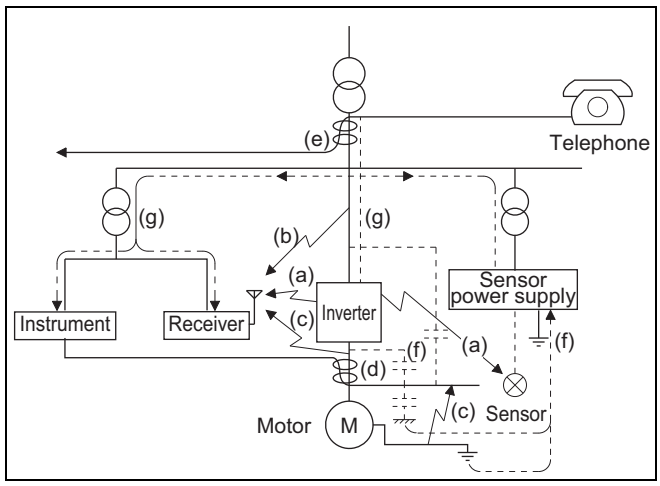

Noise propagation path	Countermeasure
(a)(b)(c)	When devices that handle low-level signals and are liable to malfunction due to electromagnetic noises, e.g. instruments, receivers and sensors, are near the inverter or when the signal cables are run near the inverter, the devices may malfunction due to by air-propagated electromagnetic noises. The following countermeasures must be taken: • Install easily affected devices as far away as possible from the inverter. • Run easily affected signal cables as far away as possible from the inverter and its I/O cables. • Do not run the signal cables and power cables (inverter I/O cables) in parallel with each other and do not bundle them. • Set the EMC filter ON/OFF connector of the inverter to the ON position. (Refer to page 80.) • Inserting a line noise filter into the output suppresses the radiated noise from the cables. • Use shielded cables as signal cables and power cables and run them in individual metal conduits to produce further effects.
(d)(e)(f)	When the signal cables are run in parallel with or bundled with the power cables, magnetic and static induction noises may be propagated to the signal cables to cause malfunction of the devices and the following countermeasures must be taken: • Install easily affected devices as far away as possible from the inverter. • Run easily affected signal cables as far away as possible from the inverter and its I/O cables. • Do not run the signal cables and power cables (inverter I/O cables) in parallel with each other and do not bundle them. • Use shielded cables as signal cables and power cables and run them in individual metal conduits to produce further effects.
(g)	When the power supplies of the peripheral devices are connected to the power supply of the inverter in the same line, inverter-generated noises may flow back through the power supply cables to cause malfunction of the devices and the following countermeasures must be taken: • Set the EMC filter ON/OFF connector of the inverter to the ON position. (Refer to page 80.) • Install the line noise filter (FR-BLF, FR-BSF01) to the power cables (output cables) of the inverter.
(h)	When a closed loop circuit is formed by connecting the peripheral device wiring to the inverter, leakage currents may flow through the earthing (grounding) cable of the inverter to cause the device to malfunction. In that case, disconnecting the earthing (grounding) cable from the device may stop the malfunction of the device.

●Data line filter

Data line filter is effective as an EMI countermeasure. Provide a data line filter for the detector cable, etc.

<Example> Data line filter : ZCAT3035-1330 (by TDK)

: ESD-SR-250 (by NEC TOKIN)

Impedance (ZCAT3035-1330)

Impedance (Ω)	
10 to 100 MHz	100 to 500 MHz
80	150

The impedance values above are reference values, and not guaranteed values.

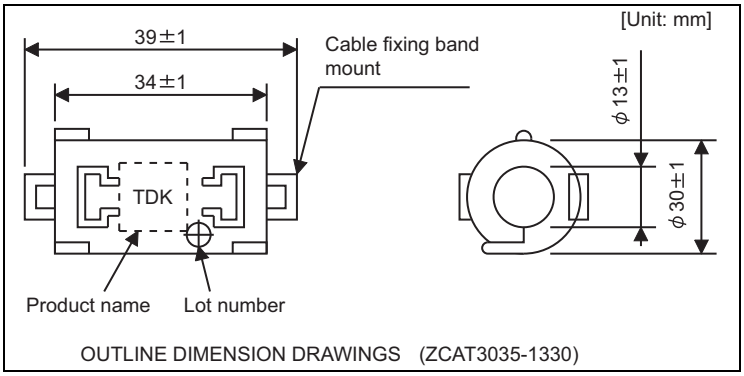

OUTLINE DIMENSION DRAWINGS (ZCAT3035-1330)

●EMI countermeasure example

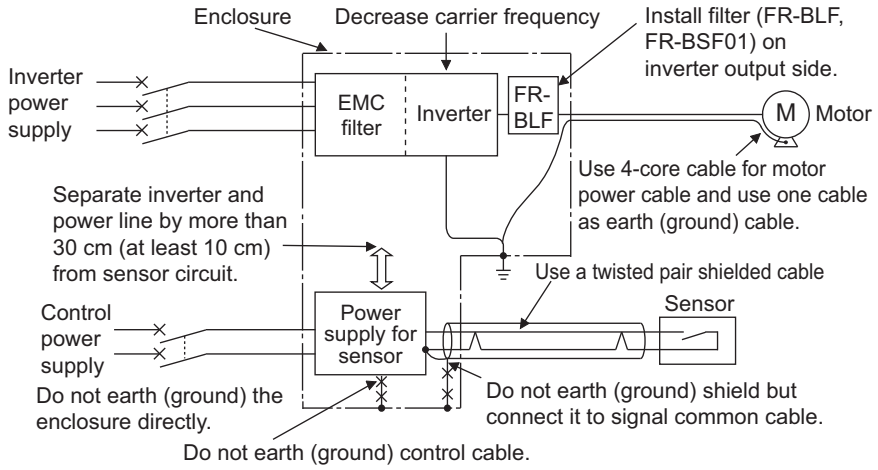

NOTE

• For compliance with the EU EMC Directive, refer to page 137.

3.1.3 Built-in EMC filter

This inverter is equipped with a built-in EMC filter (capacitive filter) and a common mode choke.
These filters are effective in reducing air-propagated noise on the input side of the inverter.
To enable the EMC filter, fit the EMC filter ON/OFF connector to the ON position. The EMC filter is initially set to the "disabled" (OFF) position for the FM type (with a built-in C3 filter). The EMC filter is initially set to the "enabled" (ON) position for the FM type (with a built-in C2 filter) and the CA type.
The input side common mode choke, which is built in the inverter, is always enabled regardless of the EMC filter ON/OFF connector setting.

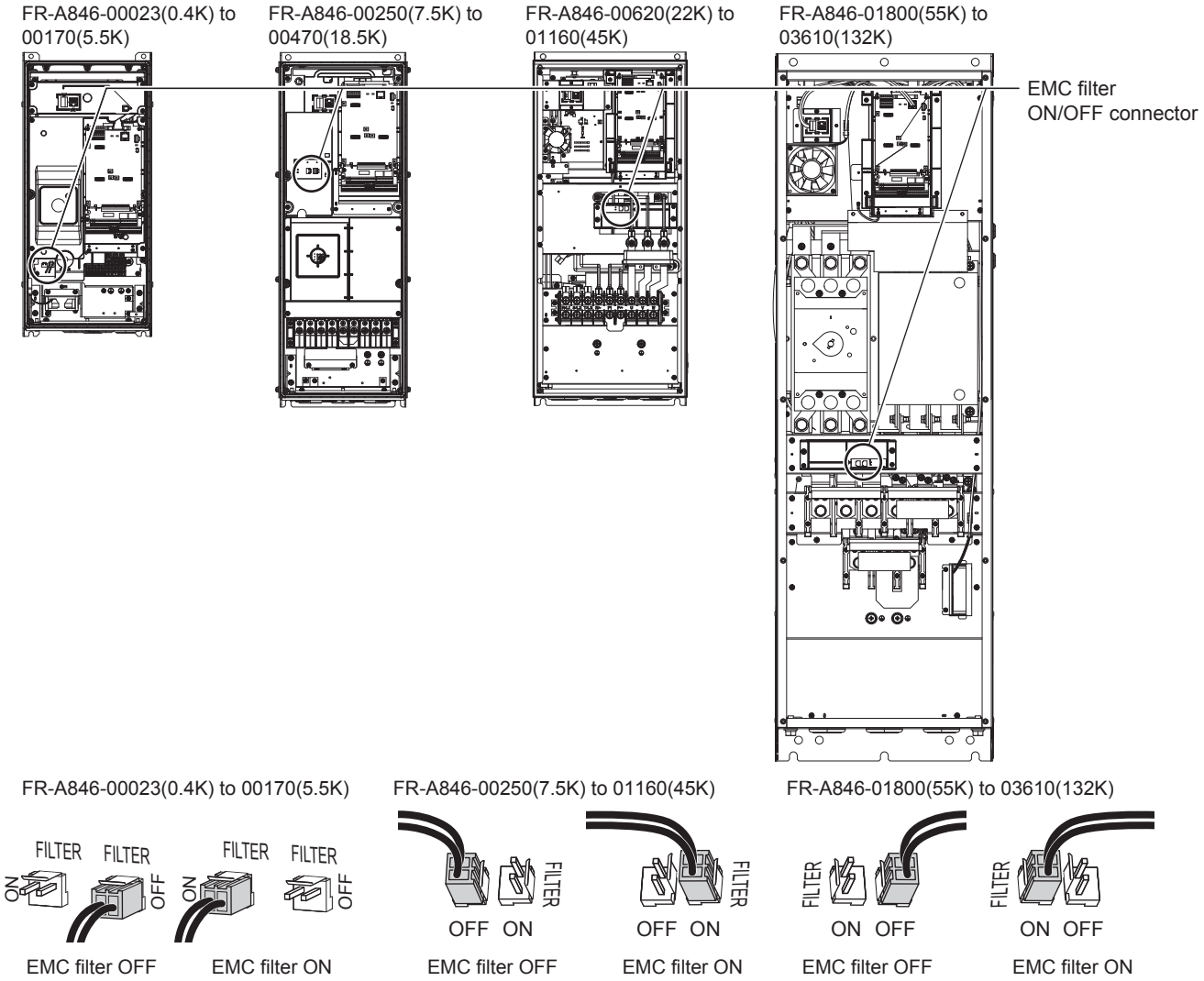

- Switching ON/OFF the filter

(1) Before removing a front cover, check to make sure that the indication of the inverter operation panel is OFF, wait for at least 10 minutes after the power supply has been switched OFF, and check that there is no residual voltage using a tester or the like.

(2) When disconnecting the connector, push the fixing tab and pull the connector straight without pulling the cable or forcibly pulling the connector with the tab fixed.
When installing the connector, also engage the fixing tab securely.
(If it is difficult to disconnect the connector, use a pair of needle-nose pliers, etc.)

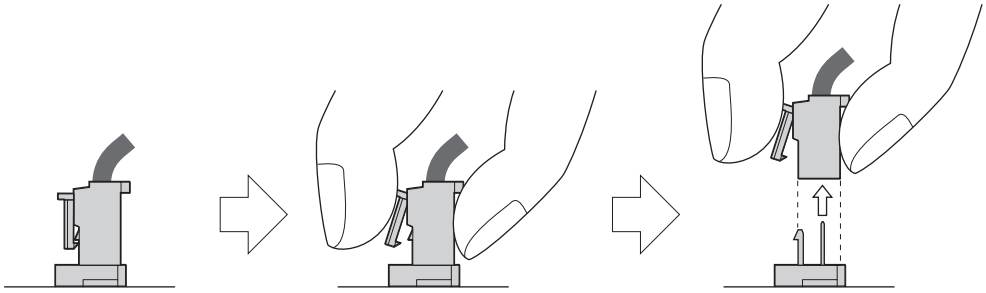

NOTE

- Do not change the initially set ON (enabled) position of the EMC filter ON/OFF connector when a built-in C2 filter is used. The Class C2 compatibility condition is not satisfied with the EMC filter OFF.
- The FR-A846-00250(7.5K)-C2 to FR-A846-00470(18.5K)-C2 are not provided with the EMC filter ON/OFF connector. The EMC filter is always ON.
- Fit the connector to either ON or OFF position.
- Enabling (turning ON) the EMC filter increases leakage current. (Refer to page 77.)

WARNING

- **While power is ON or when the inverter is running, do not open the front cover. Otherwise you may get an electric shock.**

3.2 Power supply harmonics

3.2.1 Power supply harmonics

The inverter may generate power supply harmonics from its converter circuit to affect the power generator, power factor correction capacitor etc. Power supply harmonics are different from noise and leakage currents in source, frequency band and transmission path. Take the following countermeasure suppression techniques.

- The differences between harmonics and noises

Item	Harmonics	Noise
Frequency	Normally 40th to 50th degrees or less (3 kHz or less).	High frequency (several 10 kHz to 1 GHz order).
Location	To-electric channel, power impedance.	To-space, distance, wiring path
Quantitative understanding	Theoretical calculation possible.	Random occurrence, quantitative grasping difficult.
Generated amount	Nearly proportional to the load capacity.	Changes with the current variation ratio. (Gets larger as switching speed increases.)
Affected equipment immunity	Specified by standards per equipment.	Different depending on maker's equipment specifications.
Countermeasure	Provide an AC reactor.	Increase distance.

- Countermeasures

The harmonic current generated from the inverter to the input side differs according to various conditions such as the wiring impedance, whether a reactor is used or not, and output frequency and output current on the load side. (A DC reactor is built in to the FR-A806.)

For the output frequency and output current, we understand that this should be calculated in the conditions under the rated load at the maximum operating frequency.

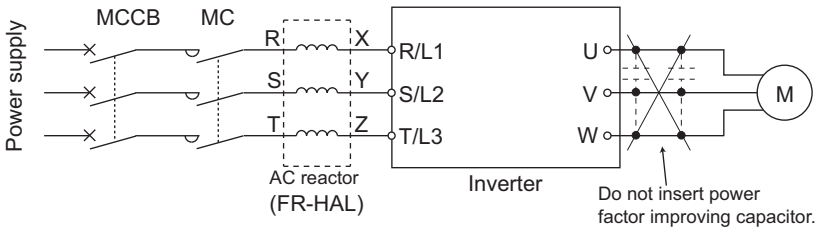

NOTE

- The power factor improving capacitor and surge suppressor on the inverter output side may be overheated or damaged by the harmonic components of the inverter output. Also, since an excessive current flows in the inverter to activate overcurrent protection, do not provide a capacitor and surge suppressor on the inverter output side when the motor is driven by the inverter. For power factor improvement, install a reactor on the inverter input side.

3.2.2 Harmonic suppression guidelines in Japan

Inverters have a converter section (rectifier circuit) and generate a harmonic current.
Harmonic currents flow from the inverter to a power receiving point via a power transformer. The Harmonic Suppression Guidelines was established to protect other consumers from these outgoing harmonic currents.
The three-phase 200 V input specifications 3.7 kW or lower were previously covered by "the Harmonic Suppression Guidelines for Household Appliances and General-purpose Products" and other models were covered by "the Harmonic Suppression Guidelines for Consumers Who Receive High Voltage or Special High Voltage". However, the transistorized inverter has been excluded from the target products covered by "the Harmonic Suppression Guidelines for Household Appliances and General-purpose Products" in January 2004 and "the Harmonic Suppression Guideline for Household Appliances and General-purpose Products" was repealed on September 6, 2004.
All capacity and all models of general-purpose inverter used by specific consumers are now covered by "the Harmonic Suppression Guidelines for Consumers Who Receive High Voltage or Special High Voltage" (hereinafter referred to as "the Specific Consumer Guidelines").

- "Specific Consumer Guidelines"
  This guideline sets forth the maximum harmonic currents outgoing from a high-voltage or especially high-voltage receiving consumer who will install, add or renew harmonic generating equipment. If any of the maximum values is exceeded, this guideline requires that consumer to take certain suppression measures.
- Maximum Values of Outgoing Harmonic Currents per 1 kW Contract Power

Received power voltage	5th	7th	11th	13th	17th	19th	23rd	Over 23rd
6.6 kV	3.5	2.5	1.6	1.3	1.0	0.9	0.76	0.70
22 kV	1.8	1.3	0.82	0.69	0.53	0.47	0.39	0.36
33 kV	1.2	0.86	0.55	0.46	0.35	0.32	0.26	0.24

◆Application of the specific consumer guidelines

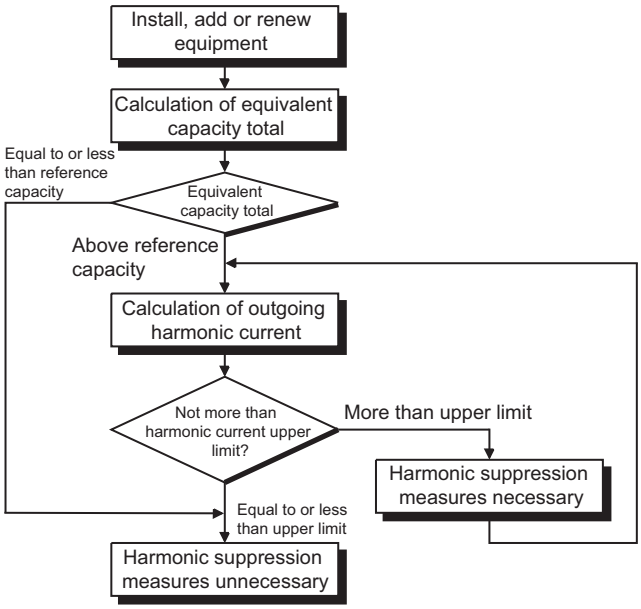

- Conversion factors

Classification	Circuit type		Conversion coefficient Ki
3	Three-phase bridge (Capacitor smoothing)	With reactor (DC side)	K33 = 1.8
		With reactors (AC, DC sides)	K34 = 1.4
5	Self-excitation three-phase bridge	When a high power factor converter is used	K5 = 0

- Equivalent Capacity Limits

Received power voltage	Reference capacity
6.6 kV	50 kVA
22/33 kV	300 kVA
66 kV or more	2000 kVA

Power supply harmonics

- Harmonic content (Values of the fundamental current is 100%)

Reactor	5th	7th	11th	13th	17th	19th	23rd	25th
Used (DC side)	30	13	8.4	5.0	4.7	3.2	3.0	2.2
Used (AC, DC sides)	28	9.1	7.2	4.1	3.2	2.4	1.6	1.4

- Calculation of equivalent capacity P0 of harmonic generating equipment
  "Equivalent capacity" is the capacity of a 6-pulse converter converted from the capacity of consumer's harmonic generating equipment and is calculated by the following equation: If the sum of equivalent capacities is higher than the limit (Refer to page 83), harmonics must be calculated with the following procedure:

P0 = ∑ (Ki × Pi) [kVA]
Ki: Conversion coefficient (Refer to page 83)
Pi: Rated capacity of harmonic generating equipment *1[kVA]
i: Number indicating the conversion circuit type

*1 Rated capacity: Determined by the capacity of the applied motor and found in Table 5. The rated capacity used here is used to calculate the generated harmonic amount and is different from the power supply capacity required for actual inverter drive.

- Calculation of outgoing harmonic current
  Outgoing harmonic current = fundamental wave current (value converted from received power voltage) × operation ratio × harmonic content
  - Operation ratio: Operation ratio = actual load factor × operation time ratio during 30 minutes
  - Harmonic content: Refer to page 84.
- Rated capacities and outgoing harmonic currents of inverter-driven motors

Applicable motor (kW)	Fundamental wave current (A)	Fundamental wave current converted from 6.6 kV (mA)	Rated capacity (kVA)	Outgoing harmonic current converted from 6.6 kV (mA) (With a DC reactor, 100% operation ratio)							
	400 V			5th	7th	11th	13th	17th	19th	23rd	25th
0.4	0.81	49	0.57	14.7	6.37	4.116	2.45	2.303	1.568	1.47	1.078
0.75	1.37	83	0.97	24.9	10.79	6.972	4.15	3.901	2.656	2.49	1.826
1.5	2.75	167	1.95	50.1	21.71	14.03	8.35	7.849	5.344	5.01	3.674
2.2	3.96	240	2.81	72	31.20	20.16	12	11.28	7.68	7.2	5.28
3.7	6.50	394	4.61	118.2	51.22	33.10	19.7	18.52	12.61	11.82	8.67
5.5	9.55	579	6.77	173.7	75.27	48.64	28.95	27.21	18.53	17.37	12.74
7.5	12.8	776	9.07	232.8	100.9	65.18	38.8	36.47	24.83	23.28	17.07
11	18.5	1121	13.1	336.3	145.7	94.16	56.05	52.69	35.87	33.63	24.66
15	24.9	1509	17.6	452.7	196.2	126.8	75.45	70.92	48.29	45.27	33.2
18.5	30.7	1860	21.8	558	241.8	156.2	93	87.42	59.52	55.8	40.92
22	36.6	2220	25.9	666	288.6	186.5	111	104.3	71.04	66.6	48.84
30	49.0	2970	34.7	891	386.1	249.5	148.5	139.6	95.04	89.1	65.34
37	60.4	3660	42.8	1098	475.8	307.4	183	172	117.1	109.8	80.52
45	73.5	4450	52.1	1335	578.5	373.8	222.5	209.2	142.4	133.5	97.9
55	89.9	5450	63.7	1635	708.5	457.8	272.5	256.2	174.4	163.5	119.9
75	123	7455	87.2	2237	969.2	626.2	372.8	350.4	238.6	223.7	164
90	147	8909	104	2673	1158	748.4	445.5	418.7	285.1	267.3	196
110	179	10848	127	3254	1410	911.2	542.5	509.9	347.1	325.4	238.7
132	216	13091	153	3927	1702	1100	654.6	615.3	418.9	392.7	288
160	258	15636	183	4691	2033	1313	781.8	734.9	500.4	469.1	344
220	355	21515	252	6455	2797	1807	1076	1011	688.5	645.5	473.3
250	403	24424	286	7327	3175	2052	1221	1148	781.6	732.7	537.3
280	450	27273	319	8182	3545	2291	1364	1282	872.7	818.2	600
315	506	30667	359	9200	3987	2576	1533	1441	981.3	920	674.7
355	571	34606	405	10382	4499	2907	1730	1627	1107	1038	761.3
400	643	38970	456	11691	5066	3273	1949	1832	1247	1169	857.3
450	723	43818	512	13145	5696	3681	2191	2059	1402	1315	964
500	804	48727	570	14618	6335	4093	2436	2290	1559	1462	1072
560	900	54545	638	16363	7091	4582	2727	2564	1745	1636	1200
630	1013	61394	718	18418	7981	5157	3070	2886	1965	1842	1351

- Determining if a countermeasure is required
  A countermeasure for harmonics is required if the following condition is satisfied: outgoing harmonic current > maximum value per 1 kW contract power × contract power

- Harmonic suppression techniques

No.	Item	Description
1	Reactor installation (FR-HAL)	Because a DC reactor is built in on the DC side of this product, outgoing harmonic current can be suppressed. By installing an AC reactor (FR-HAL) on the AC side of the inverter, the outgoing harmonic current suppression performance can be improved.
2	High power factor converter (FR-HC2), multifunction regeneration converter (FR-XC)	This converter trims the current waveform to be a sine waveform by switching the rectifier circuit (converter module) with transistors. Doing so suppresses the generated harmonic amount significantly. Connect it to the DC area of an inverter. Use the high power factor converter (FR-HC2) with the accessories that come as standard. To use the FR-XC series converter, use the converter with the FR-XCB box-type reactor and enable the harmonic suppression function.
3	Installation of power factor improving capacitor	When used with a reactor connected in series, the power factor improving correction capacitor can absorb harmonic currents.
4	Transformer multi-phase operation	Use two transformers with a phase angle difference of 30° as in 人-Δ and Δ-Δ combinations to provide an effect corresponding to 12 pulses, reducing low-degree harmonic currents.
5	Passive filter (AC filter)	A capacitor and a reactor are used together to reduce impedances at specific frequencies. Harmonic currents are expected to be absorbed greatly by using this technique.
6	Active filter	This filter detects the current in a circuit generating a harmonic current and generates a harmonic current equivalent to a difference between that current and a fundamental wave current to suppress the harmonic current at the detection point. Harmonic currents are expected to be absorbed greatly by using this technique.

3.3 Installation of a reactor

When the inverter is connected near a large-capacity power transformer (1000 kVA or more) or when a power factor correction capacitor is to be switched over, an excessive peak current may flow in the power input circuit, damaging the converter circuit. To prevent this, always install an optional AC reactor (FR-HAL).

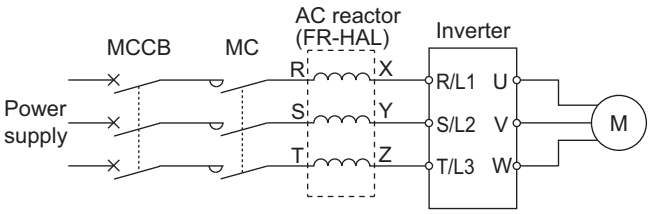

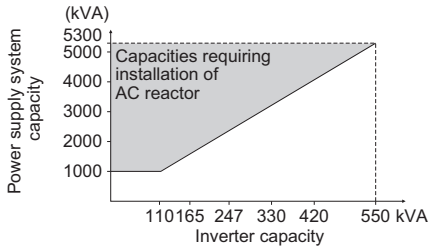

3.4 Power-OFF and magnetic contactor (MC)

◆Inverter input side magnetic contactor (MC)

On the inverter input side, it is recommended to provide an MC for the following purposes:
(Refer to page 14 for selection.)

- To disconnect the inverter from the power supply at activation of a protective function or at malfunctioning of the driving system (emergency stop, etc.). For example, an MC prevents overheat or burnout of the brake resistor when heat capacity of the resistor is insufficient or brake regenerative transistor is damaged with short while connecting an optional brake resistor.
- To prevent any accident due to an automatic restart at power restoration after an inverter stop made by a power failure.
- To separate the inverter from the power supply to ensure safe maintenance and inspection work.

If using an MC for emergency stop during motor driving, select an MC regarding the inverter input side current as JEM 1038-AC-3 class rated current.

NOTE

- Since repeated inrush currents at power ON will shorten the life of the converter circuit (switching life is about 1,000,000 times), frequent starts and stops of the magnetic contactor must be avoided. Turn ON/OFF the inverter start controlling terminals (STF, STR) to run/stop the inverter.

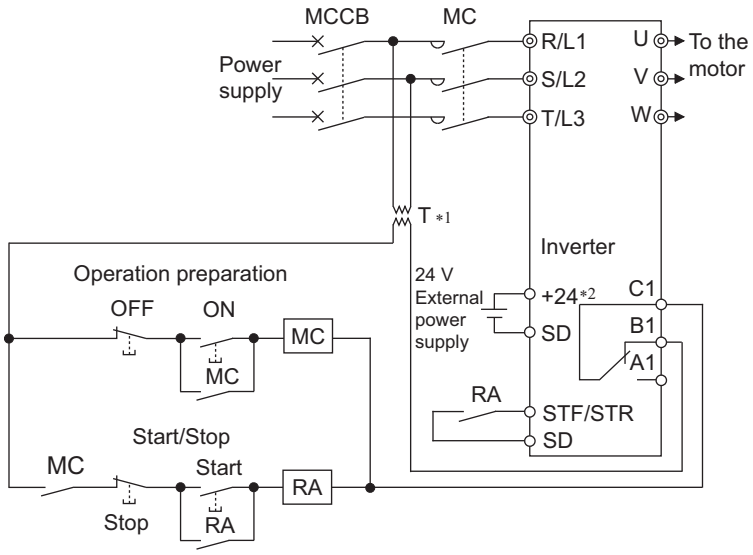

- Inverter start/stop circuit example
  As shown on the left, always use the start signal (ON or OFF of STF(STR) signal) to make a start or stop.

*1 Install a stepdown transformer.
*2 To hold an alarm signal when the inverter's protection circuit is activated, input a 24 V external power supply across terminals +24 and SD. (Refer to page 43.)

◆Handling of the magnetic contactor on the inverter's output side

Switch the magnetic contactor between the inverter and motor only when both the inverter and motor are at a stop. When the magnetic contactor is turned ON while the inverter is operating, overcurrent protection of the inverter and such will activate. When an MC is provided to switch to a commercial power supply, for example, it is recommended to use the commercial power supply-inverter switchover function **Pr.135 to Pr.139** (Refer to the Instruction Manual (Detailed)). (The commercial power supply operation is not available with vector control dedicated motors (SF-V5RU, SF-THY) nor with PM motors.)

◆Handling of the manual contactor on the inverter's output side

A PM motor is a synchronous motor with high-performance magnets embedded inside. High-voltage is generated at the motor terminals while the motor is running even after the inverter power is turned OFF. In an application where the PM motor is driven by the load even after the inverter is powered OFF, a low-voltage manual contactor must be connected at the inverter's output side.

NOTE

- Before wiring or inspection for a PM motor, confirm that the PM motor is stopped. In an application, such as fan and blower, where the motor is driven by the load, a low-voltage manual contactor must be connected at the inverter's output side, and wiring and inspection must be performed while the contactor is open. Otherwise you may get an electric shock.
- Do not open or close the contactor while the inverter is running (outputting).

3.5 Countermeasures against deterioration of the 400 V class motor insulation

In the PWM type inverter, a surge voltage attributable to wiring constants is generated at the motor terminals. Especially in a 400 V class motor, the surge voltage may deteriorate the insulation. When the 400 V class motor is driven by the inverter, consider the following countermeasures:

◆Countermeasures for induction motors

It is recommended to take one of the following countermeasures:

◆Rectifying the motor insulation and limiting the PWM carrier frequency according to the wiring length

For the 400 V class motor, use an insulation-enhanced motor.

Specifically,

- Order a "400 V class inverter-driven insulation-enhanced motor".
- For the dedicated motor such as the constant-torque motor and low-vibration motor, use an "inverter-driven dedicated motor".
- Set **Pr.72 PWM frequency selection** as indicated below according to the wiring length.

	Wiring length		
	50 m or shorter	**50 m to 100 m**	**Longer than 100 m**
Pr.72 PWM frequency selection	15 (14.5 kHz) or lower	9 (9 kHz) or lower	4 (4 kHz) or lower

◆Suppressing the surge voltage on the inverter side

- For the FR-A846-01800(55K) or lower, connect the surge voltage suppression filter (FR-ASF-H/FR-BMF-H) to the output side.
- For the FR-A846-02160(75K) or higher, connect the sine wave filter (MT-BSL/BSC) to the output side.

◆Countermeasures for PM motors

- When the wiring length exceeds 50 m, set "9" (6 kHz) or less in **Pr.72 PWM frequency selection**.

NOTE

- For the details of **Pr.72 PWM frequency selection**, refer to the Instruction Manual (Detailed).
- For the details of the surge voltage suppression filter (FR-ASF-H/FR-BMF-H), refer to the Instruction Manual of each option.
- A surge voltage suppression filter (FR-ASF-H/FR-BMF-H) can be used under V/F control and Advanced magnetic flux vector control.
  A sine wave filter (MT-BSL/BSC) can be used under V/F control. Do not use the filters under different control modes.
- The carrier frequency is limited during PM sensorless vector control. (Refer to the Instruction Manual (Detailed).)

3.6 Checklist before starting operation

The FR-A800 series inverter is a highly reliable product, but incorrect peripheral circuit making or operation/handling method may shorten the product life or damage the product.

Before starting operation, always recheck the following points.

Checkpoint	Countermeasure	Refer to page	Check by user
Crimping terminals are insulated.	Use crimping terminals with insulation sleeves to wire the power supply and the motor.	-	
The wiring between the power supply (R/L1, S/L2, T/L3) and the motor (U, V, W) is correct.	Application of power to the output terminals (U, V, W) of the inverter will damage the inverter. Never perform such wiring.	26	
No wire offcuts are left from the time of wiring.	Wire offcuts can cause an alarm, failure or malfunction. Always keep the inverter clean. When drilling mounting holes in a wall etc., take caution not to allow chips and other foreign matters to enter the inverter.	-	
The main circuit cable gauge is correctly selected.	Use an appropriate cable gauge to suppress the voltage drop to 2% or less. If the wiring distance is long between the inverter and motor, the voltage drop in the main circuit will cause the motor torque to decrease especially during the output of a low frequency.	31	
The total wiring length is within the specified length.	Keep the total wiring length within the specified length. In long distance wiring, charging currents due to stray capacitance in the wiring may degrade the fast-response current limit operation or cause the equipment on the inverter's output side to malfunction. Pay attention to the total wiring length.	31	
Countermeasures are taken against EMI.	The input/output (main circuit) of the inverter includes high frequency components, which may interfere with the communication devices (such as AM radios) used near the inverter. In such case, activate the EMC filter (turn ON the EMC filter ON/OFF connector) to minimize interference.	80	
On the inverter's output side, there is no power factor correction capacitor, surge suppressor, or radio noise filter installed.	Such installation will cause the inverter to trip or the capacitor and surge suppressor to be damaged. If any of the above devices is connected, immediately remove it.	-	
When performing an inspection or rewiring on the product that has been energized, the operator has waited long enough after shutting off the power supply.	For some time after the power-OFF, a high voltage remains in the smoothing capacitor, and it is dangerous. Before performing an inspection or rewiring, wait 10 minutes or longer after the power supply turns OFF, then confirm that the voltage across the main circuit terminals P/+ and N/- of the inverter is low enough using a tester, etc.	-	
The inverter's output side has no short circuit or ground fault occurring.	A short circuit or ground fault on the inverter's output side may damage the inverter module. Fully check the insulation resistance of the circuit prior to inverter operation since repeated short circuits caused by peripheral circuit inadequacy or a ground fault caused by wiring inadequacy or reduced motor insulation resistance may damage the inverter module. Fully check the to-earth (ground) insulation and phase-to-phase insulation of the inverter's output side before power-ON. Especially for an old motor or use in hostile atmosphere, make sure to check the motor insulation resistance, etc.	-	
The circuit is not configured to use the inverter's input-side magnetic contactor to start/stop the inverter frequently.	Since repeated inrush currents at power ON will shorten the life of the converter circuit, frequent starts and stops of the magnetic contactor must be avoided. Turn ON/OFF the inverter's start signals (STF, STR) to run/stop the inverter.	86	
The voltage applied to the inverter I/O signal circuits is within the specifications.	Application of a voltage higher than the permissible voltage to the inverter I/O signal circuits or opposite polarity may damage the I/O devices. Especially check the wiring to prevent the speed setting potentiometer from being connected incorrectly to short circuit the terminals 10E and 5.	34	
When using the electronic bypass operation, electrical and mechanical interlocks are provided between the electronic bypass contactors MC1 and MC2.	When using a switching circuit as shown below, chattering due to mis-configured sequence or arc generated at switching may allow undesirable current to flow in and damage the inverter. Mis-wiring may also damage the inverter. (The commercial power supply operation is not available with vector control dedicated motors (SF-V5RU, SF-THY) nor with PM motors.) 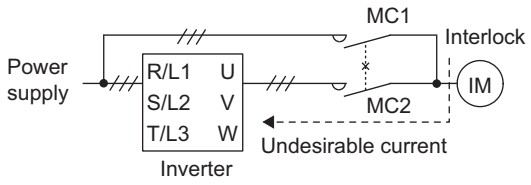 If switching to the commercial power supply operation while a failure such as an output short circuit has occurred between the magnetic contactor MC2 and the motor, the damage may further spread. If a failure has occurred between the MC2 and the motor, a protection circuit such as using the OH signal input must be provided.	-	

Checkpoint	Countermeasure	Refer to page	Check by user
A countermeasure is provided for power restoration after a power failure.	If the machine must not be restarted when power is restored after a power failure, provide an MC in the inverter's input side and also make up a sequence which will not switch ON the start signal. If the start signal (start switch) remains ON after a power failure, the inverter will automatically restart as soon as the power is restored.	-	
When using vector control, the encoder is properly installed.	The encoder must be directly connected to a motor shaft without any backlash. (Real sensorless vector control, PM sensorless vector control do not require an encoder.)	54	
A magnetic contactor (MC) is installed on the inverter's input side.	On the inverter's input side, connect an MC for the following purposes: • To disconnect the inverter from the power supply at activation of a protective function or at malfunctioning of the driving system (emergency stop, etc.). • To prevent any accident due to an automatic restart at power restoration after an inverter stop made by a power failure. • To separate the inverter from the power supply to ensure safe maintenance and inspection work. If using an MC for emergency stop during motor driving, select an MC regarding the inverter input side current as JEM 1038-AC-3 class rated current.	86	
The magnetic contactor on the inverter's output side is properly handled.	Switch the magnetic contactor between the inverter and motor only when both the inverter and motor are at a stop.	86	
When using a PM motor, a low-voltage manual contactor is installed on the inverter's output side.	When a failure occurs between the MC2 and motor, make sure to provide a protection circuit, such as using the OH signal input. In an application, such as fan and blower, where the motor is driven by the load, a low-voltage manual contactor must be connected at the inverter's output side, and wiring and inspection must be performed while the contactor is open. Otherwise you may get an electric shock.	86	
An EMI countermeasure is provided for the frequency setting signals.	If electromagnetic noise generated from the inverter causes frequency setting signal to fluctuate and the motor rotation speed to be unstable when changing the motor speed with analog signals, the following countermeasures are effective: • Do not run the signal cables and power cables (inverter I/O cables) in parallel with each other and do not bundle them. • Run signal cables as far away as possible from power cables (inverter I/O cables). • Use shielded cables. • Install a ferrite core on the signal cable (Example: ZCAT3035-1330 by TDK).	78	
A countermeasure is provided for an overload operation.	When performing frequent starts/stops by the inverter, rise/fall in the temperature of the transistor element of the inverter will repeat due to a repeated flow of large current, shortening the life from thermal fatigue. Since thermal fatigue is related to the amount of current, the life can be increased by reducing current at locked condition, starting current, etc. Reducing current may extend the service life but may also cause torque shortage, which leads to a start failure. Adding a margin to the current can eliminate such a condition. For an induction motor, use an inverter of a higher capacity (up to two ranks). For a PM motor, use an inverter and PM motor of higher capacities.	-	
The specifications and rating match the system requirements.	Make sure that the specifications and rating match the system requirements.	128	
Countermeasures are taken against electrical corrosion on the motor bearing.	When a motor is driven by the inverter, axial voltage is generated on the motor bearing, which may cause electrical corrosion of the bearing in rare cases depending on: condition of the grease used for the bearing, wiring, load, operating conditions of the motor, or specific inverter settings (high carrier frequency, EMC filter ON). Contact your sales representative to take appropriate countermeasures for the motor. The following shows examples of countermeasures for the inverter. • Decrease the carrier frequency. • Turn OFF the EMC filter. • Provide a common mode choke *1 on the output side of the inverter. (This is effective regardless of the EMC filter ON/OFF connector setting.) *1 Recommended common mode choke: FT-3KM F series FINEMET® common mode choke cores manufactured by Hitachi Metals, Ltd. FINEMET is a registered trademark of Hitachi Metals, Ltd.	-	

3

3.7 Failsafe system which uses the inverter

When a fault is detected by the protective function, the protective function activates and outputs a fault signal. However, a fault signal may not be output at an inverter's fault occurrence when the detection circuit or output circuit fails, etc. Although Mitsubishi assures the best quality products, provide an interlock which uses inverter status output signals to prevent accidents such as damage to the machine when the inverter fails for some reason. Also at the same time consider the system configuration where a failsafe from outside the inverter, without using the inverter, is enabled even if the inverter fails.

◆Interlock method which uses the inverter status output signals

By combining the inverter output signals to provide an interlock as shown below, an inverter failure can be detected.

No.	Interlock method	Check method	Used signals
a	Inverter protective function operation	Operation check of an alarm contact. Circuit error detection by negative logic.	Fault output signal (ALM signal)
b	Inverter operating status	Operation ready signal check.	Operation ready signal (RY signal)
c	Inverter running status	Logic check of the start signal and running signal.	Start signal (STF signal, STR signal) Inverter running (RUN) signal
d	Inverter running status	Logic check of the start signal and output current.	Start signal (STF signal, STR signal) Output current detection signal (Y12 signal)

(a) Checking by the output of the inverter fault signal
When the inverter's protective function activates and the inverter trips, the fault output signal (ALM signal) is output. (ALM signal is assigned to terminal A1B1C1 in the initial setting).
With this signal, check that the inverter operates properly.
In addition, negative logic can be set. (ON when the inverter is normal, OFF when the fault occurs.)

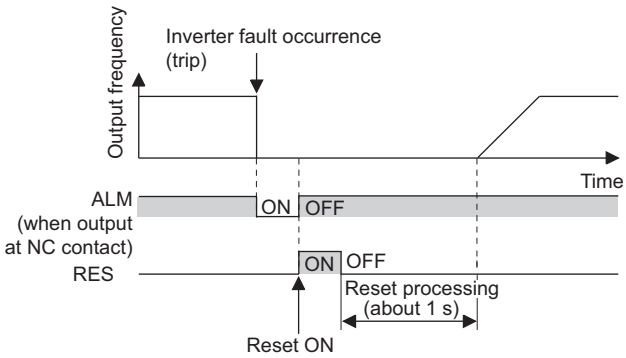

(b) Checking the inverter operating status by the inverter operation ready completion signal
Operation ready signal (RY signal) is output when the inverter power is ON and the inverter becomes operative. Check if the RY signal is output after powering ON the inverter.

(c) Checking the inverter operating status by the start signal input to the inverter and inverter running signal
The inverter running signal (RUN signal) is output when the inverter is running. (RUN signal is assigned to terminal RUN in the initial setting.)
Check if RUN signal is being output while inputting a start signal to the inverter. (STF signal is a forward rotation signal, and STR is a reverse rotation signal.)
Even after the start signal is turned OFF, the RUN signal is kept output until the inverter makes the motor to decelerate and to stop. For the logic check, configure a sequence considering the inverter's deceleration time.

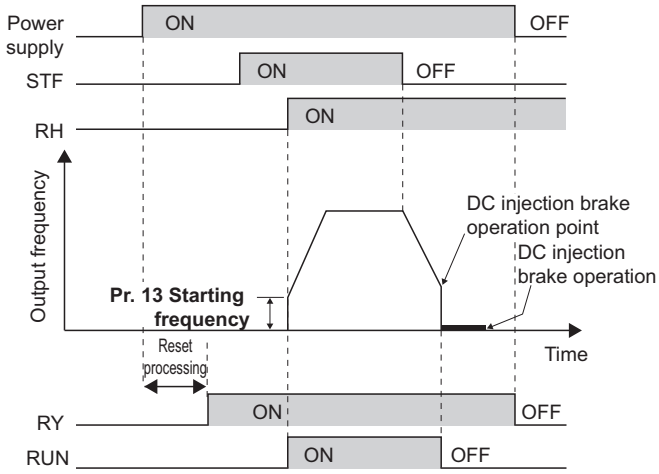

(d) Checking the motor operating status by the start signal input to the inverter and inverter output current detection signal
The output current detection signal (Y12 signal) is output when the inverter operates and currents flows into the motor. Check if Y12 signal is being output while inputting a start signal to the inverter. (STF signal is a forward rotation signal, and STR is a reverse rotation signal.) The Y12 signal is initially set to be output at 150% inverter rated current. Adjust the level to around 20% using no load current of the motor as reference with **Pr.150 Output current detection level**. Like the inverter running signal (RUN signal), even after the start signal is turned OFF, the Y12 signal is kept output until the inverter stops the output to a decelerating motor. For the logic check, configure a sequence considering the inverter's deceleration time.

Output signal	Pr.190 to Pr.196 setting	
	Positive logic	Negative logic
ALM	99	199
RY	11	111
RUN	0	100
Y12	12	112

- When using various signals, assign the functions to **Pr.190 and Pr.196 (output terminal function selection)** referring to the table on the left.

NOTE

- Changing the terminal assignment using **Pr.190 and Pr.196 (output terminal function selection)** may affect the other functions. Set parameters after confirming the function of each terminal.
- For the details of the parameters and signals, refer to the Instruction Manual (Detailed).

◆Backup method outside the inverter

Even if the interlock is provided by the inverter status signal, enough failsafe is not ensured depending on the failure status of the inverter itself. For example, if an inverter CPU fails in a system interlocked with the inverter's fault, start, and RUN signals, no fault signal will be output and the RUN signal will be kept ON because the inverter CPU is down.
Provide a speed detector to detect the motor speed and current detector to detect the motor current and consider the backup system such as performing a check as below according to the level of importance of the system.

(a) Start signal and actual operation check
Check the motor running and motor current while the start signal is input to the inverter by comparing the start signal to the inverter and detected speed of the speed detector or detected current of the current detector. Note that the current is flowing through the motor while the motor coasts to stop, even after the inverter's start signal is turned OFF. For the logic check, configure a sequence considering the inverter's deceleration time. In addition, it is recommended to check the three-phase current when using the current detector.

(b) Command speed and actual operation check
Check for a gap between the actual speed and commanded speed by comparing the inverter's speed command and the speed detected by the speed detector.

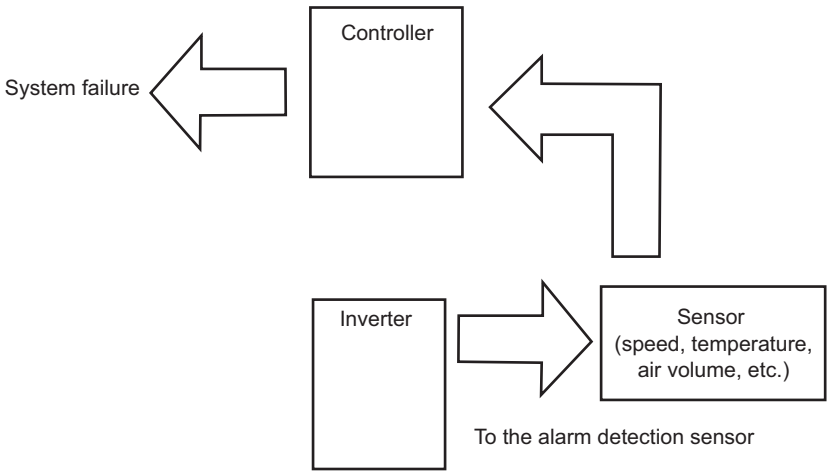

MEMO

4 PROTECTIVE FUNCTIONS

This chapter explains the "PROTECTIVE FUNCTIONS" that operates in this product.
Always read the instructions before using the equipment.

4.1 Inverter fault and alarm indications 94
4.2 Reset method for the protective functions.....94
4.3 Fault history and the list of fault displays 95

4.1 Inverter fault and alarm indications

- When the inverter detects a fault, depending on the nature of the fault, the operation panel displays an error message or warning, or a protective function activates to trip the inverter.
- When any fault occurs, take an appropriate corrective action, then reset the inverter, and resume the operation. Restarting the operation without a reset may break or damage the inverter.
- When a protective function activates, note the following points.

Item	Description
Fault output signal	Opening the magnetic contactor (MC) provided on the input side of the inverter at a fault occurrence shuts off the control power to the inverter, therefore, the fault output will not be retained.
Fault or alarm indication	When a protective function activates, the operation panel displays a fault indication.
Operation restart method	While a protective function is activated, the inverter output is kept shutoff. Reset the inverter to restart the operation.

- Inverter fault or alarm indications are categorized as below.

Displayed item	Description
Error message	A message regarding an operational fault and setting fault by the operation panel and the parameter unit. The inverter does not trip.
Warning	The inverter does not trip even when a warning. However, failure to take appropriate measures will lead to a fault.
Alarm	The inverter does not trip. An Alarm (LF) signal can be output with a parameter setting.
Fault	A protective function activates to trip the inverter and output a Fault (ALM) signal.

NOTE

- For the details of fault displays and other malfunctions, also refer to the Instruction Manual (Detailed).
- The past eight faults can be displayed using the setting dial. (Refer to page 49)

4.2 Reset method for the protective functions

Reset the inverter by performing any of the following operations. Note that the accumulated heat value of the electronic thermal relay function and the number of retries are cleared (erased) by resetting the inverter.
The inverter recovers about 1 s after the reset is released.

- On the operation panel, press STOP RESET to reset the inverter.
  (This may only be performed when a fault occurs.)

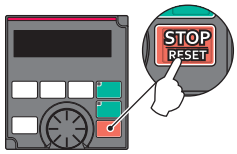

- Switch the power OFF once, then switch it ON again.

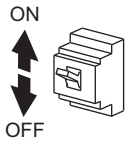

- Turn ON the reset signal (RES) for 0.1 s or more. (If the RES signal is kept ON, "Err" appears (flickers) to indicate that the inverter is in a reset status.)

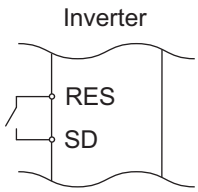

NOTE

- OFF status of the start signal must be confirmed before resetting the inverter fault. Resetting an inverter fault with the start signal ON restarts the motor suddenly.

4.3 Fault history and the list of fault displays

For details, refer to the Instruction Manual (Detailed).

	Operation panel indication		Name
Error message	HOLd	HOLD	Operation panel lock
	LOCd	LOCD	Password locked
	Er 1 to Er4 Er8	Er1 to Er4 Er8	Parameter write error
	rE 1 to rE8	rE1 to rE8	Copy operation error
	Err.	Err.	Error
Warning	OL	OL	Stall prevention (overcurrent)
	oL	oL	Stall prevention (overvoltage)
	TH	TH	Electronic thermal relay function pre-alarm
	PS	PS	PU stop
	SL	SL	Speed limit indication
	CF	CF	Continuous operation during communication fault
	CP	CP	Parameter copy
	SA	SA	Safety stop
	MT 1 to MT3	MT1 to MT3	Maintenance signal output
	UF	UF	USB host error
	HP 1	HP1	Home position return setting error
	HP2	HP2	Home position return uncompleted
	HP3	HP3	Home position return parameter setting error
Alarm	FN	FN	Fan alarm
	FN2	FN2	Internal-circulation fan alarm
Fault	E. OC 1	E.OC1	Overcurrent trip during acceleration
	E. OC2	E.OC2	Overcurrent trip during constant speed
	E. OC3	E.OC3	Overcurrent trip during deceleration or stop
	E. OV 1	E.OV1	Regenerative overvoltage trip during acceleration
	E. OV2	E.OV2	Regenerative overvoltage trip during constant speed
	E. OV3	E.OV3	Regenerative overvoltage trip during deceleration or stop
	E. THT	E.THT	Inverter overload trip (electronic thermal relay function)
	E. THM	E.THM	Motor overload trip (electronic thermal relay function)
	E. FIN	E.FIN	Heat sink overheat
	E. IPF	E.IPF	Instantaneous power failure
	E. UVT	E.UVT	Undervoltage

	Operation panel indication		Name
Fault	E. ILF	E.ILF	Input phase loss
	E. OLT	E.OLT	Stall prevention stop
	E. SOT	E. SOT	Loss of synchronism detection
	E. LUP	E. LUP	Upper limit fault detection
	E. LdN	E. LDN	Lower limit fault detection
	E. GF	E.GF	Output side earth (ground) fault overcurrent
	E. LF	E.LF	Output phase loss
	E. OHT	E.OHT	External thermal relay operation
	E. PTC	E.PTC	PTC thermistor operation
	E. OPT	E.OPT	Option fault
	E. OP 1 to E. OP3	E.OP1 to E.OP3	Communication option fault
	E. 16 to E. 20	E.16 to E.20	User definition error by the PLC function
	E. PE	E.PE	Parameter storage device fault (control circuit board)
	E. PUE	E.PUE	PU disconnection
	E. RET	E.RET	Retry count excess
	E. PE2	E.PE2	Parameter storage device fault (main circuit board)
	E. CPU E. 5 to E. 7	E.CPU E. 5 to E. 7	CPU fault
	E. CTE	E.CTE	Operation panel power supply short circuit/RS-485 terminals power supply short circuit
	E. P24	E.P24	24 VDC power fault
	E. CdO	E.CDO	Abnormal output current detection
	E. IOH	E.IOH	Inrush current limit circuit fault
	E. SER	E.SER	Communication fault (inverter)
	E. AIE	E.AIE	Analog input fault
	E. USb	E.USB	USB communication fault
	E. SAF	E.SAF	Safety circuit fault
	E. IAH	E.IAH	Abnormal internal temperature
	E. PbT E. 13	E.PBT E.13	Internal circuit fault
	E. OS	E.OS	Overspeed occurrence
	E. OSd	E.OSD	Speed deviation excess detection
	E. ECT	E.ECT	Signal loss detection
	E. Od	E.OD	Excessive position fault
	E. Mb 1 to E. Mb7	E.MB1 to E.MB7	Brake sequence fault

Fault history and the list of fault displays

	Operation panel indication		Name
Fault	E. EP	E.EP	Encoder phase fault
	E. MP	E.MP	Magnetic pole position unknown
	E. EF	E.EF	External fault during output operation
	E. bE	E.BE	Brake transistor alarm detection
	E. LCI	E.LCI	4 mA input fault
	E. PCH	E.PCH	Pre-charge fault
	E. PId	E.PID	PID signal fault
	E. 1 to E. 3	E. 1 to E. 3	Option fault
	E. 11	E.11	Opposite rotation deceleration fault
Others	E----	E----	Fault history
	E. 0	E.0	No fault records
	EV	EV	24 V external power supply operation
	Rd	RD	Backup in progress
	WR	WR	Restoration in progress

If faults other than the above appear, contact your sales representative.

5 PRECAUTIONS FOR MAINTENANCE AND INSPECTION

This chapter explains the "PRECAUTIONS FOR MAINTENANCE AND INSPECTION" for this product.
Always read the instructions before using the equipment.

5.1 Inspection item.....98
5.2 Measurement of main circuit voltages, currents, and powers .123

The inverter is a static unit mainly consisting of semiconductor devices. Daily inspection must be performed to prevent any fault from occurring due to the adverse effects of the operating environment, such as temperature, humidity, dust, dirt and vibration, changes in the parts with time, service life, and other factors.

●Precautions for maintenance and inspection

When accessing the inverter for inspection, wait for at least 10 minutes after the power supply has been switched OFF, and then make sure that the voltage across the main circuit terminals P/+ and N/- of the inverter is not more than 30 VDC using a tester, etc.

5.1 Inspection item

5.1.1 Daily inspection

Basically, check for the following faults during operation.

- Motor operation fault
- Improper installation environment
- Cooling system fault
- Abnormal vibration, abnormal noise
- Abnormal overheat, discoloration

5.1.2 Periodic inspection

Check the areas inaccessible during operation and requiring periodic inspection.
Consult us for periodic inspection.

- Check and clean the cooling system ..... Clean the air filter, etc.
- Check the tightening and retighten ..... The screws and bolts may become loose due to vibration, temperature changes, etc. Check and tighten them.
  Tighten them according to the specified tightening torque. (Refer to page 31.)
- Check the conductors and insulating materials for corrosion and damage
- Measure the insulation resistance
- Check and change the cooling fan, internal fan and relay
- Check for condensation ..... A sudden temperature change may cause water droplets (condensation) to form inside the inverter. Using the inverter with condensation inside may cause a failure.
- Check for ingress of water or dust ..... If the waterproof or dustproof performance is impaired, water or dust may get into the inverter. Using the inverter with water or dust remaining inside may cause a failure.
- Inspection and replacement of the gasket ..... Changes such as in temperature may cause aging degradation of the gasket rubber material, which may impair the waterproof and dustproof performances.

NOTE

- When using the safety stop function, periodic inspection is required to confirm that safety function of the safety system operates correctly.
  For more details, refer to the Safety stop function instruction manual.

5.1.3 Daily and periodic inspection

Area of inspection	Inspection item	Description	Inspection interval		Corrective action at fault occurrence	Check by the user
			Daily	Periodic *3		
General	Surrounding environment	Check the ambient temperature, humidity, dirt, corrosive gas, oil mist, etc.	o		Improve the environment.	
	Overall unit	Check for unusual vibration and noise.	o		Check fault location and retighten.	
		Check for dirt, oil, and other foreign material. *1	o		Clean.	
	Power supply voltage	Check that the main circuit voltages and control voltages are normal. *2	o		Inspect the power supply.	
Main circuit	General	(1) Check with megger (across main circuit terminals and earth (ground) terminal).		o	Contact the manufacturer.	
		(2) Check for loose screws and bolts.		o	Retighten.	
		(3) Check for overheat traces on the parts.		o	Contact the manufacturer.	
		(4) Check for stain.		o	Clean.	
	Conductors, cables	(1) Check conductors for distortion.		o	Contact the manufacturer.	
		(2) Check cable sheaths for breakage and deterioration (crack, discoloration, etc.).		o	Contact the manufacturer.	
	Transformer/ reactor	Check for unusual odor and abnormal increase of whining sound.	o		Stop the equipment and contact the manufacturer.	
	Terminal block	Check for a damage.		o	Stop the equipment and contact the manufacturer.	
	Smoothing aluminum electrolytic capacitor	(1) Check for liquid leakage.		o	Contact the manufacturer.	
		(2) Check for safety valve projection and bulge.		o	Contact the manufacturer.	
		(3) Visual check and judge by the life check of the main circuit capacitor. (Refer to page 102.)		o		
	Relay/ contactor	Check that the operation is normal and no chattering sound is heard.		o	Contact the manufacturer.	
	Resistor	(1) Check for crack in resistor insulation.		o	Contact the manufacturer.	
		(2) Check for a break in the cable.		o	Contact the manufacturer.	
Control circuit, protective circuit	Operation check	(1) Check that the output voltages across phases are balanced while operating the inverter alone.		o	Contact the manufacturer.	
		(2) Check that no fault is found in protective and display circuits in a sequence protective operation test.		o	Contact the manufacturer.	
	Components check: Overall	(1) Check for unusual odor and discoloration.		o	Stop the equipment and contact the manufacturer.	
		(2) Check for serious rust development.		o	Contact the manufacturer.	
	Components check: Aluminum electrolytic capacitor	(1) Check for liquid leakage in a capacitor and deformation trace.		o	Contact the manufacturer.	
		(2) Visual check and judge by the life check of the control circuit capacitor. (Refer to page 102.)		o		
Cooling system	Cooling fan Internal fan	(1) Check for unusual vibration and noise.	o		Replace the fan.	
		(2) Check for loose screws and bolts.		o	Check fault location and retighten.	
		(3) Check for stain.		o	Clean.	
	Heat sink	(1) Check for clogging.		o	Clean.	
		(2) Check for stain.		o	Clean.	

Inspection item

Area of inspection	Inspection item	Description	Inspection interval		Corrective action at fault occurrence	Check by the user
			Daily	Periodic *3		
Display	Indication	(1) Check that display is normal.	○		Contact the manufacturer.	
		(2) Check for stain.		○	Clean.	
	Meter	Check that reading is normal.	○		Stop the equipment and contact the manufacturer.	
Load motor	Operation check	Check for vibration and abnormal increase in operation noise.	○		Stop the equipment and contact the manufacturer.	
Waterproof performance, dustproof performance	Operation panel	(1) Check that it is installed.	○		Install it securely. (Refer to page 51)	
		(2) Check for deformation or fracture.		○	Stop the equipment and contact the manufacturer.	
		(3) Check for loose fixing screws.		○	Retighten.	
	Front cover and wiring cover	(1) Check that it is installed.	○		Install it securely. (Refer to page 15, 27)	
		(2) Check for deformation or fracture.		○	Stop the equipment and contact the manufacturer.	
		(3) Check for loose fixing screws.		○	Retighten.	
	Gasket	(1) Check for stain.		○	Clean.	
		(2) Check for damage.		○	Stop the equipment and contact the manufacturer.	
		(3) Check for degradation (crack, discoloration, or deformation).		○	Stop the equipment and contact the manufacturer.	
	Inside the inverter	(1) Check for condensation.		○	Wipe off the condensation.	
		(2) Check for ingress of water or dust.		○	Stop the equipment and contact the manufacturer.	

*1 Oil component of the heat dissipation grease used inside the inverter may leak out. The oil component, however, is not flammable, corrosive, nor conductive and is not harmful to humans. Wipe off such oil component.

*2 It is recommended to install a voltage monitoring device for checking the voltage of the power supplied to the inverter.

*3 One to two years of periodic inspection cycle is recommended. However, it differs according to the installation environment. Consult us for periodic inspection.

NOTE

- Continuous use of a leaked, deformed, or degraded smoothing aluminum electrolytic capacitor (as shown in the table above) may lead to a burst, breakage or fire. Replace such a capacitor without delay.

5.1.4 Checking the inverter and converter modules

◆Preparation

- Disconnect the external power supply cables (R/L1, S/L2, T/L3) and motor cables (U, V, W).
- Prepare a tester. (For the resistance measurement, use the 100 Ω range.)

◆Checking method

Change the polarity of the tester alternately at the inverter terminals R/L1, S/L2, T/L3, U, V, W, P/+, and N/- and check the electric continuity.

NOTE

- Before measurement, check that the smoothing capacitor is discharged.
- At the time of electric discontinuity, the measured value is almost ∞. When there is an instantaneous electric continuity, due to the smoothing capacitor, the tester may not indicate ∞. At the time of electric continuity, the measured value is several Ω to several tens of Ω. If all measured values are almost the same, although these values are not constant depending on the module type and tester type, the modules are without fault.

◆Module device numbers and terminals to be checked

		Tester polarity		Result		Tester polarity		Result
		⊕	⊖			⊕	⊖	
Converter module	D1	R/L1	P/+	Discontinuity	D4	R/L1	N/-	Continuity
		P/+	R/L1	Continuity		N/-	R/L1	Discontinuity
	D2	S/L2	P/+	Discontinuity	D5	S/L2	N/-	Continuity
		P/+	S/L2	Continuity		N/-	S/L2	Discontinuity
	D3	T/L3	P/+	Discontinuity	D6	T/L3	N/-	Continuity
		P/+	T/L3	Continuity		N/-	T/L3	Discontinuity
Inverter module	TR1	U	P/+	Discontinuity	TR4	U	N/-	Continuity
		P/+	U	Continuity		N/-	U	Discontinuity
	TR3	V	P/+	Discontinuity	TR6	V	N/-	Continuity
		P/+	V	Continuity		N/-	V	Discontinuity
	TR5	W	P/+	Discontinuity	TR2	W	N/-	Continuity
		P/+	W	Continuity		N/-	W	Discontinuity

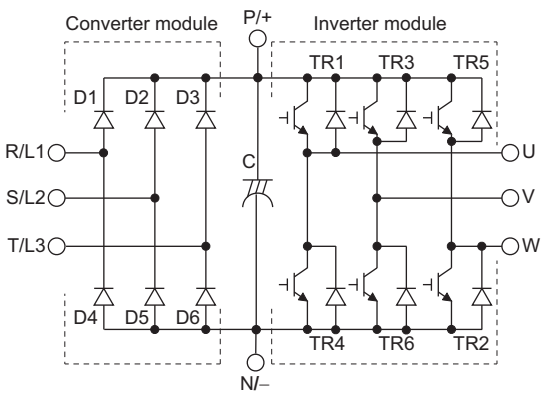

(Assumes the use of an analog meter.)

5.1.5 Cleaning

Always run the inverter in a clean status.
When cleaning the inverter, gently wipe dirty areas with a soft cloth immersed in neutral detergent or ethanol.

NOTE

- Do not use solvent, such as acetone, benzene, toluene and alcohol, as these will cause the inverter surface paint to peel off.
- The display, etc. of the operation panel and parameter unit are vulnerable to detergent and alcohol. Therefore, avoid using them for cleaning.

5.1.6 Replacement of parts

The inverter consists of many electronic parts such as semiconductor devices.
The following parts may deteriorate with age because of their structures or physical characteristics, leading to reduced performance or fault of the inverter. For preventive maintenance, the parts must be replaced periodically.
Use the life check function as a guidance of parts replacement.

Part name	Estimated lifespan*1	Description
Cooling fan, internal fan	10 years	Replace (as required)
Main circuit smoothing capacitor	10 years*2	Replace (as required)
On-board smoothing capacitor	10 years*2	Replace the board (as required)
Relays	—	As required
Gasket	2 years*3	Replace (as required)

*1 Estimated lifespan for when the yearly average ambient temperature is 35°C.
(without corrosive gas, flammable gas, oil mist, dust and dirt etc.)
*2 Output current: 80% of the inverter rating
*3 The estimated lifespan is only a guide. To maintain the waterproof and dustproof performances of the inverter, daily and periodic inspections are recommended.

NOTE

- For parts replacement, contact the nearest Mitsubishi FA center.

◆Displaying the life of the inverter parts

The inverter diagnoses the main circuit capacitor, control circuit capacitor, cooling fan, internal fan, and inrush current limit circuit by itself and estimates their lives.
The self-diagnostic warning is output when the life span of each part is near its end. It gives an indication of replacement time.
The life warning output can be used as a guideline for life judgment.

Parts	Judgment level
Main circuit capacitor	85% of the initial capacity
Control circuit capacitor	Estimated remaining life 10%
Inrush current limit circuit	Estimated remaining life 10% (Power ON: 100,000 times left)
Cooling fan	Not more than the specified speed

NOTE

- Refer to the Instruction Manual (Detailed) to perform the life check of the inverter parts.

◆Replacement procedure of the fan

The replacement interval of the cooling fan used for cooling the parts generating heat such as the main circuit semiconductor is greatly affected by the ambient temperature. When unusual noise and/or vibration are noticed during inspection, the cooling fan must be replaced immediately.

NOTE

- Switch the power OFF before replacing fans. Even after the power supply is shut off, the inverter is charged and can cause an electric shock. Before replacing the fan, make sure to check that the voltage across inverter main circuit terminals P/+ and N/- has been dropped enough using a tester after 10 minutes or more after the power supply shutoff.

◆Removal of the cooling fan (FR-A846-00250(7.5K) to 00470(18.5K))

(1) Remove the installation screws, and then remove the fan cover.

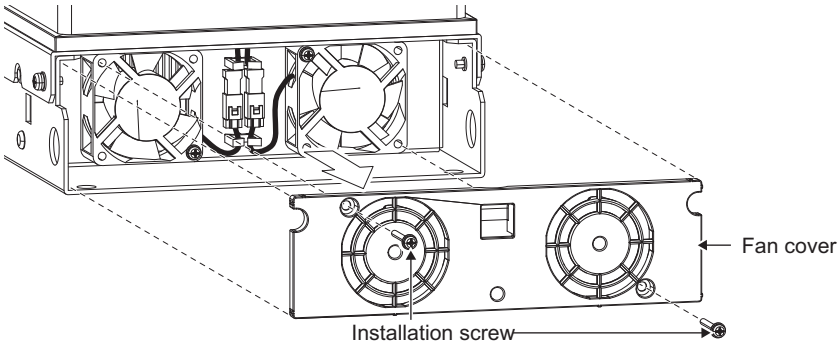

(2) Disconnect the fan connectors.

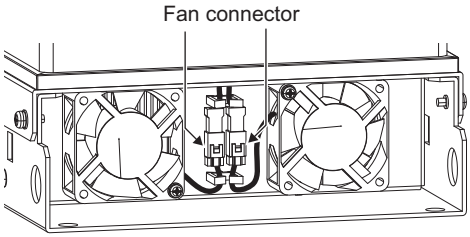

(3) Remove the installation screws, and then remove the fan.

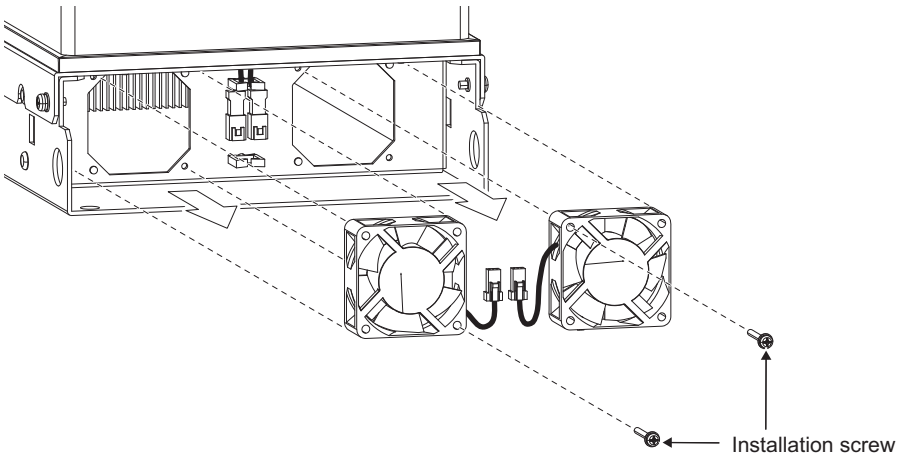

◆ Removal of the cooling fan (FR-A846-00620(22K) to 01160(45K))

(1) Remove the installation screws, and then remove the fan cover.

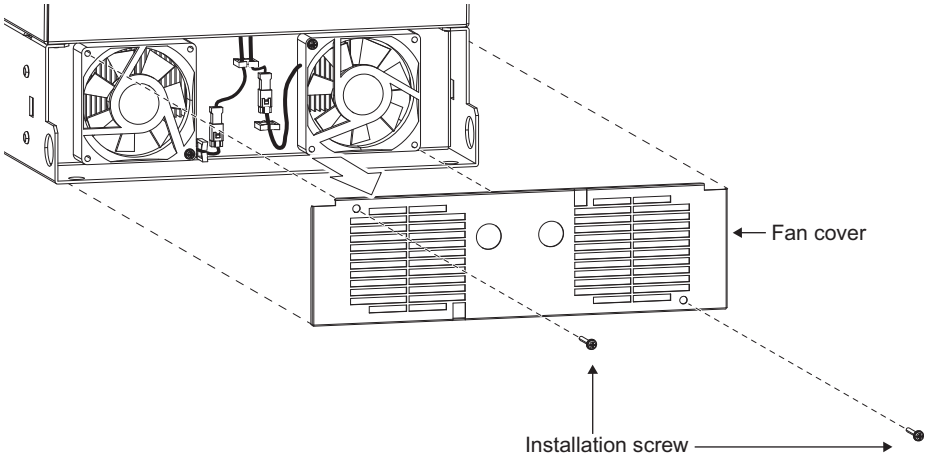

(2) Disconnect the fan connectors.

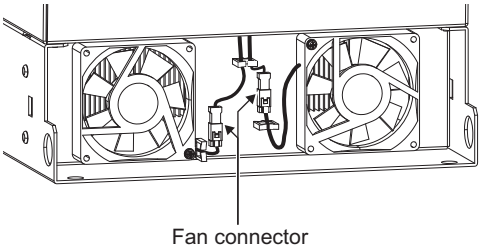

(3) Remove the installation screws, and then remove the fan.

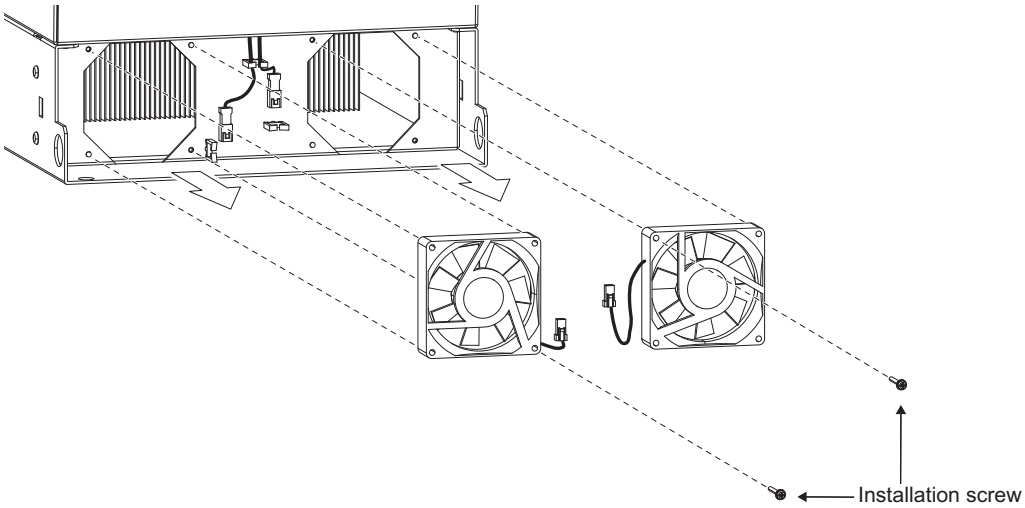

◆ Removal of the cooling fan (FR-A846-01800(55K) to 03610(132K))

(1) Remove the installation screws, and then remove the fan cover.

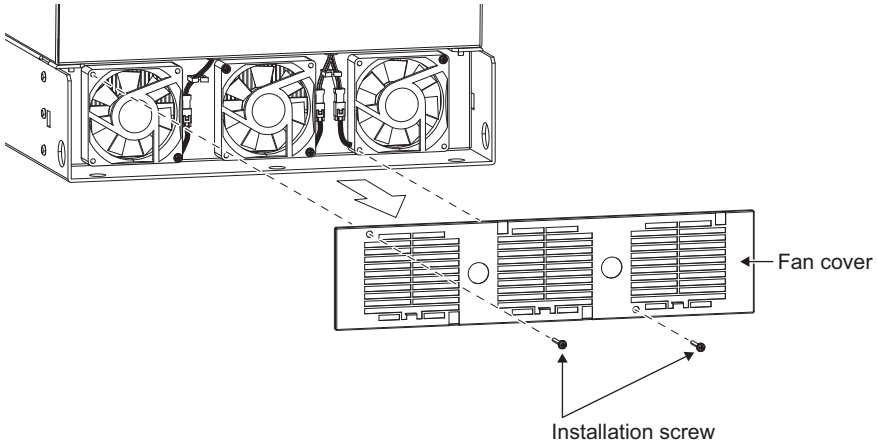

(2) Disconnect the fan connectors.

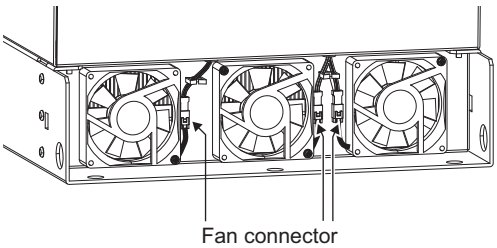

(3) Remove the installation screws, and then remove the fan.

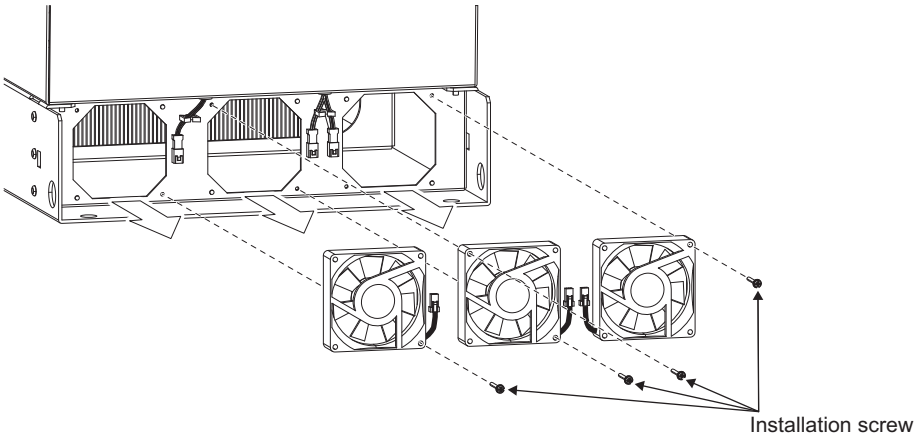

◆ Reinstallation of the cooling fan (FR-A846-00250(7.5K) to 00470(18.5K))

(1) After confirming the orientation of the fan, reinstall the fan so that the "AIR FLOW" faces up. Then, fix the fan with the installation screws. (tightening torque 1.4 to 1.9 N•m)

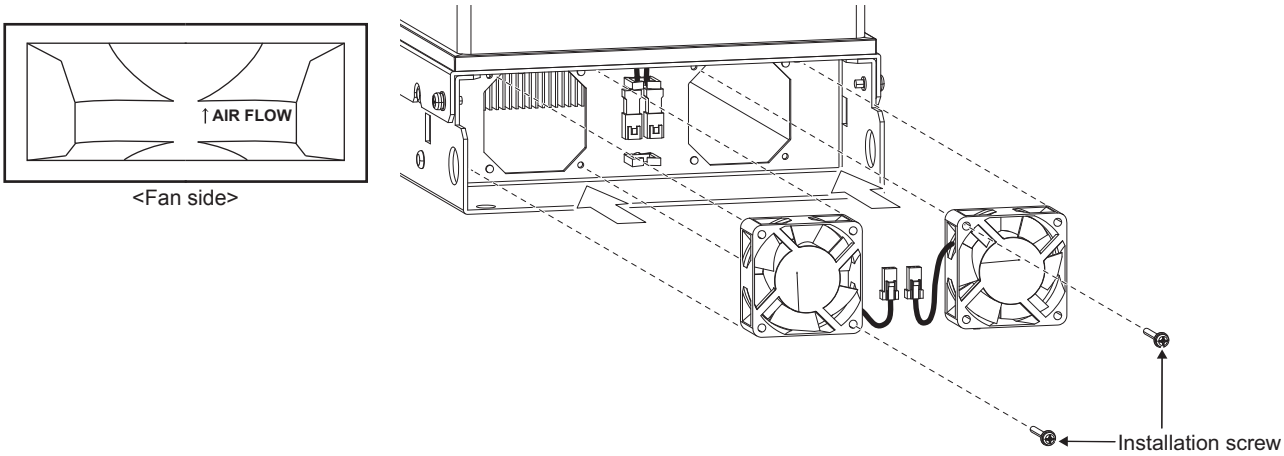

(2) Route the fan lead through the clamp, and then reconnect the fan connectors.

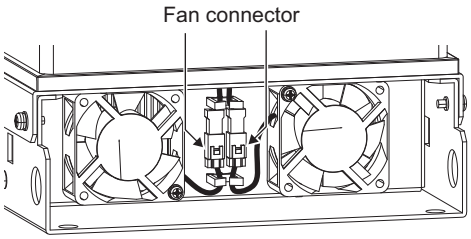

(3) Attach the fan cover with the installation screws. (tightening torque 1.4 to 1.9 N•m)

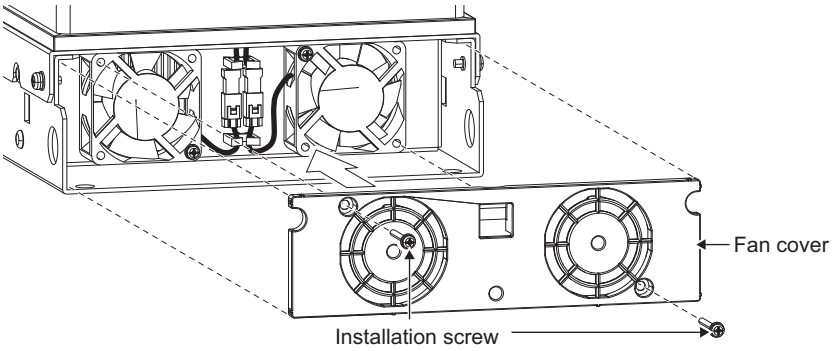

NOTE

- Installing the fan in the opposite direction of air flow can cause the inverter life to be shorter.
- Prevent the cable from being caught when installing a fan.

◆ Reinstallation of the cooling fan (FR-A846-00620(22K) to 01160(45K))

(1) After confirming the orientation of the fan, reinstall the fan so that the "AIR FLOW" faces up. Then, fix the fan with the installation screws. (tightening torque 1.4 to 1.9 N•m)

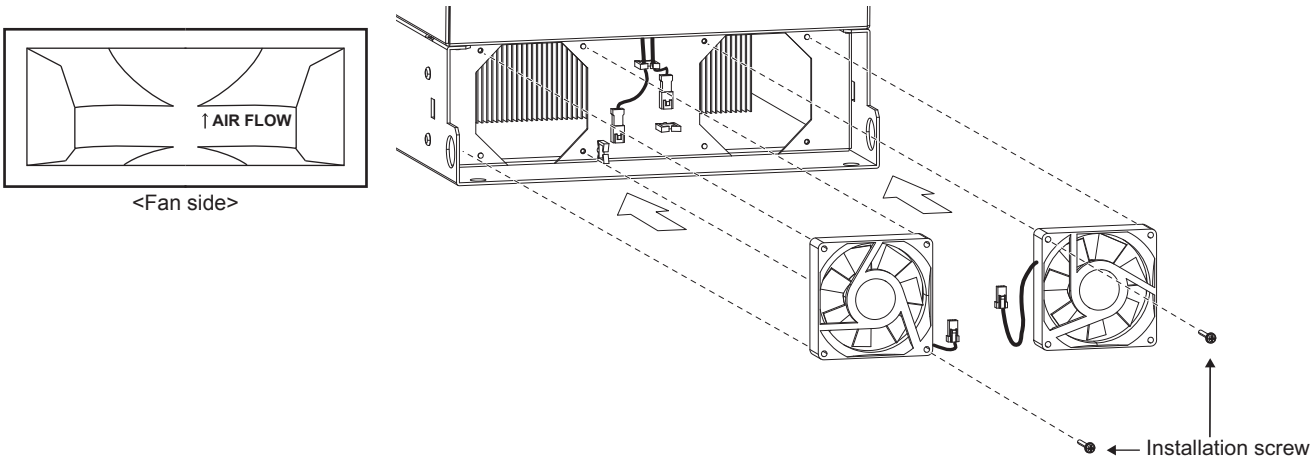

(2) Route the fan lead through the clamp, and then reconnect the fan connectors.

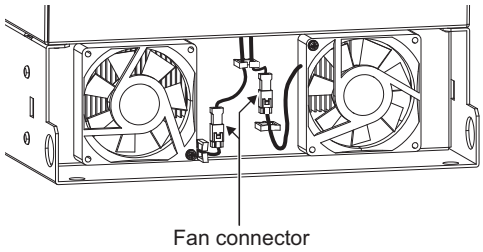

(3) Attach the fan cover with the installation screws. (tightening torque 1.4 to 1.9 N•m)

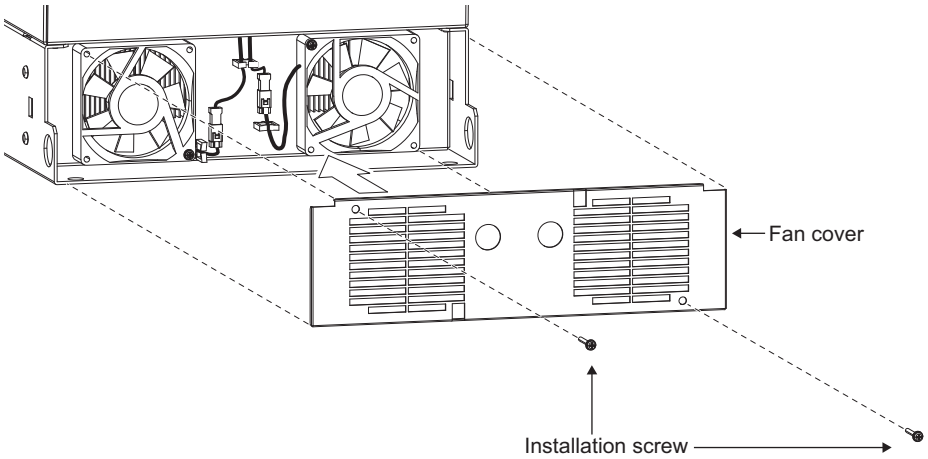

NOTE

- Installing the fan in the opposite direction of air flow can cause the inverter life to be shorter.
- Prevent the cable from being caught when installing a fan.

◆Reinstallation of the cooling fan (FR-A846-01800(55K) to 03610(132K))

(1) After confirming the orientation of the fan, reinstall the fan so that the "AIR FLOW" faces up. Then, fix the fan with the installation screws. (tightening torque 1.4 to 1.9 N•m)

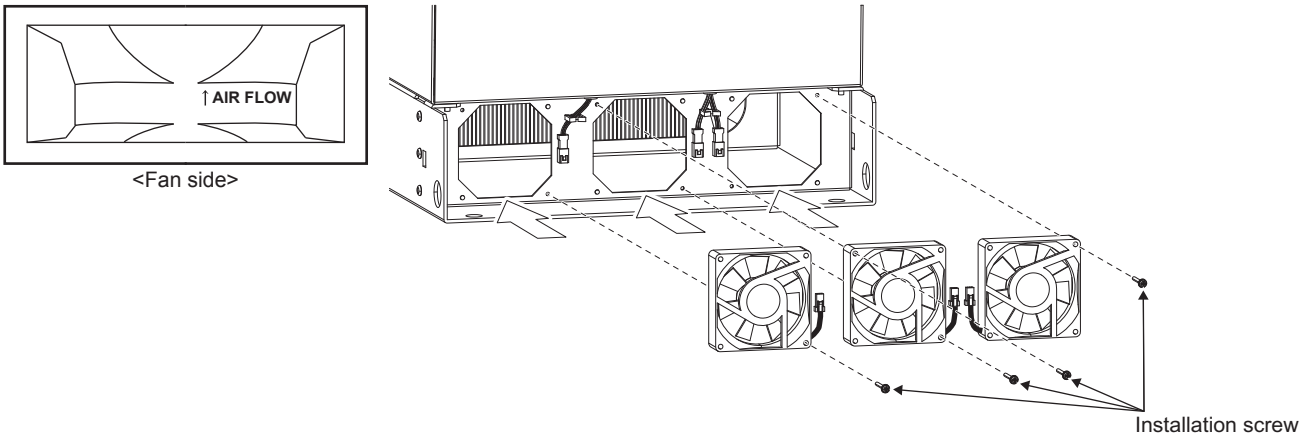

(2) Reconnect the fan connectors.

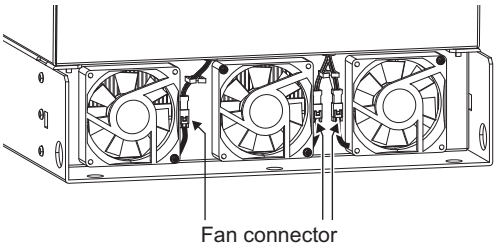

(3) Attach the fan cover with the installation screws. (tightening torque 1.4 to 1.9 N•m)

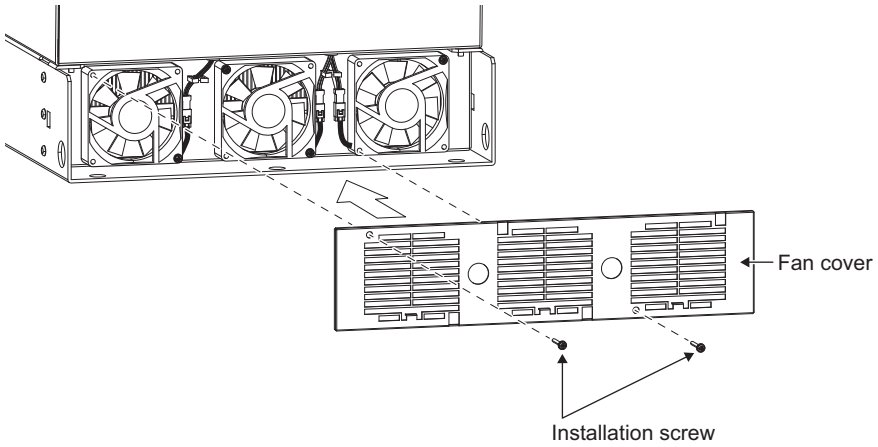

NOTE

- Installing the fan in the opposite direction of air flow can cause the inverter life to be shorter.
- Prevent the cable from being caught when installing a fan.

◆ Removal of the internal fan (FR-A846-00170(5.5K) or lower)

(1) Remove the inverter front cover. (Refer to page 15)

(2) Move the fan connector case, and then remove the fan connector.

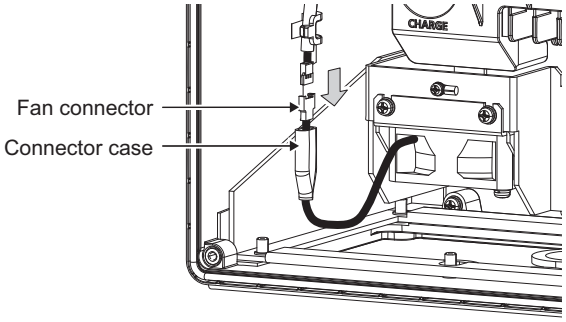

(3) Remove the installation screws, and then remove the bracket.

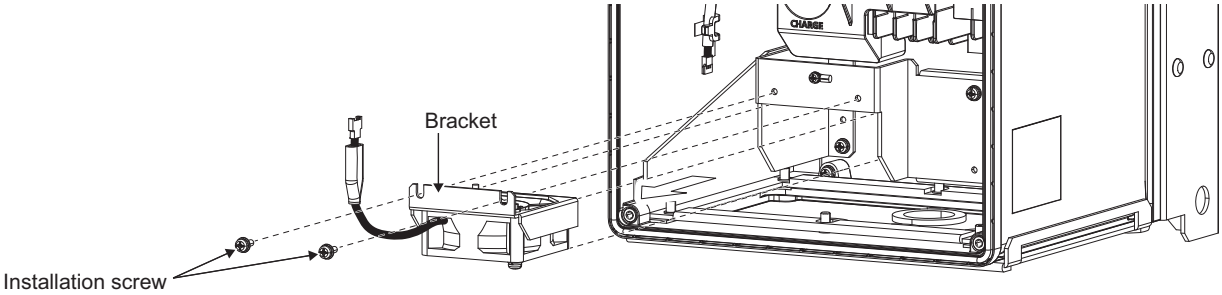

(4) Remove the installation screws, and then remove the fan.

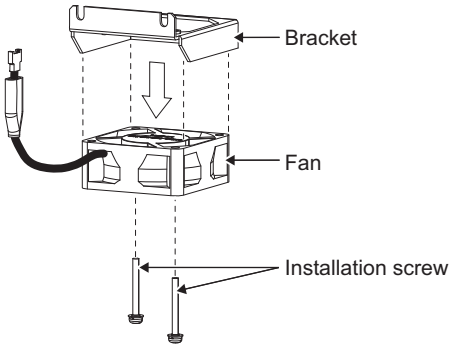

◆ Removal of the internal fan (FR-A846-00250(7.5K) to 00470(18.5K))

(1) Remove the inverter front cover. (Refer to page 15)

(2) Remove the installation screws, and then remove the protective cover.

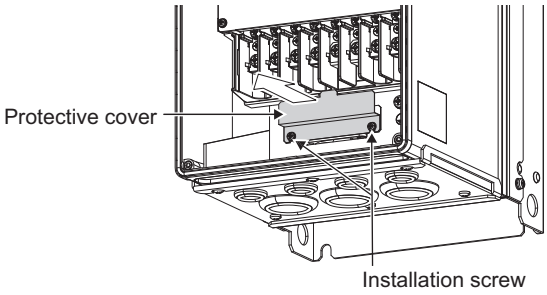

(3) Move the fan connector case, and then remove the fan connector.

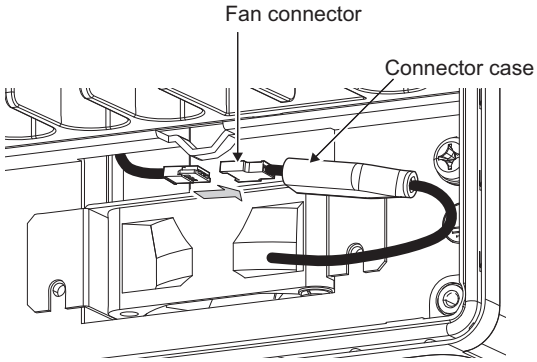

(4) Remove the bracket.

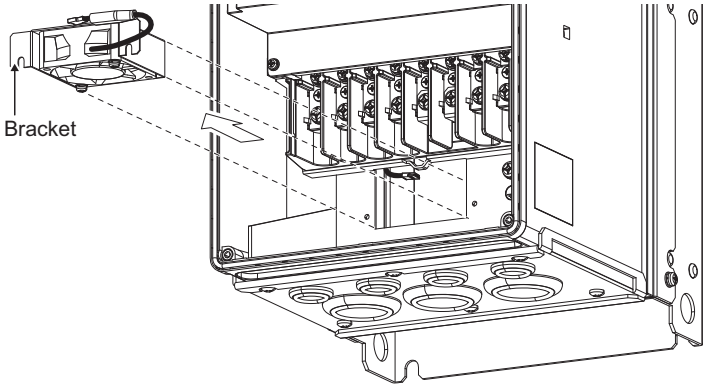

(5) Remove the installation screws, and then remove the fan.

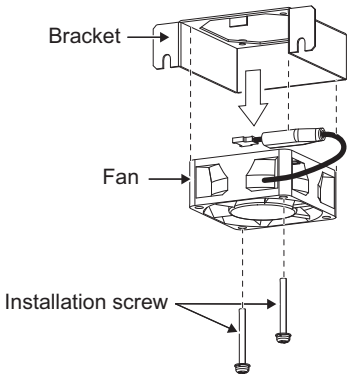

◆ Removal of the internal fan (FR-A846-00620(22K) to 01160(45K))

(1) Remove the inverter front cover. (Refer to page 15)

(2) Move the fan connector case, and then remove the fan connector.

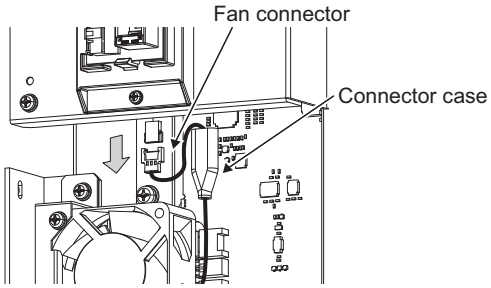

(3) Remove the installation screws and the bracket, and then remove the fan.

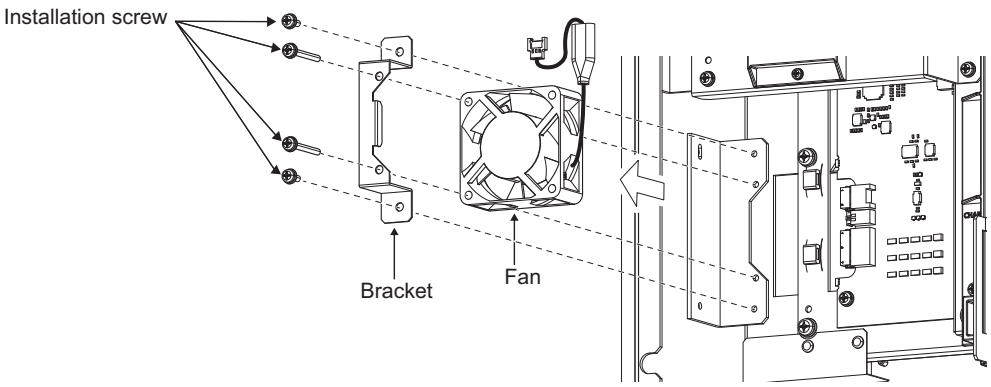

◆ Removal of the internal fan (upper) (FR-A846-01800(55K) to 02600(90K))

(1) Remove the inverter front cover. (Refer to page 15)

(2) Move the fan connector case, and then remove the fan connector.

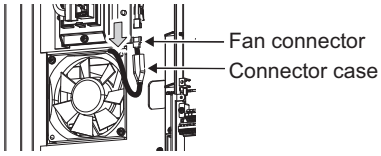

(3) Remove the installation screws, and then remove the fan.

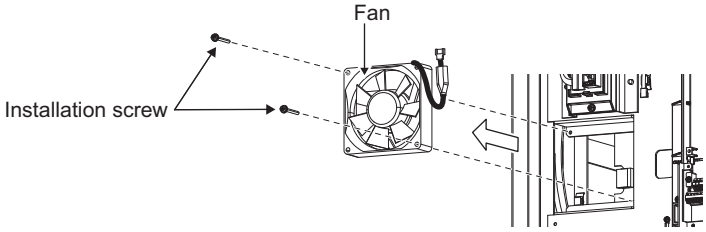

◆ Removal of the internal fan (lower) (FR-A846-01800(55K) to 02600(90K))

(1) Remove the inverter front cover. (Refer to page 15)

(2) Move the fan connector case, and then remove the fan connector.

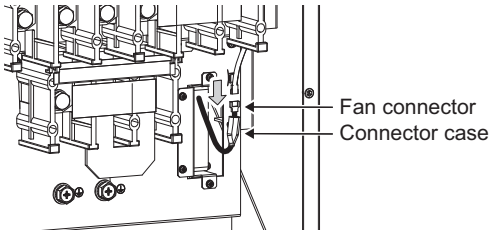

(3) Remove the installation screws, and then remove the bracket.

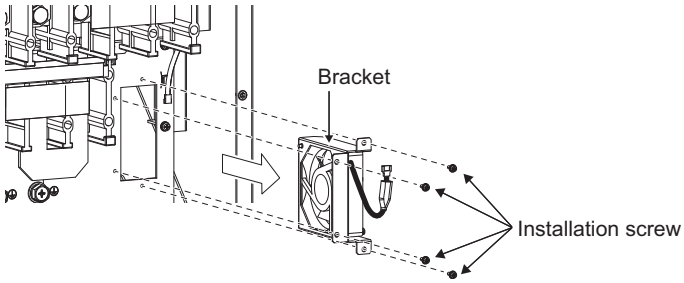

(4) Remove the installation screws, and then remove the fan.

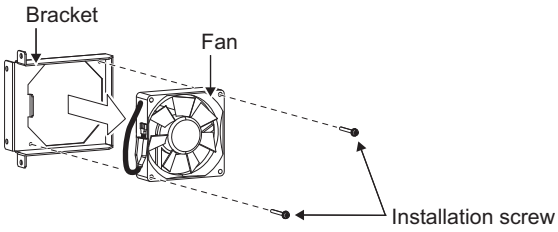

◆ Removal of the internal fan (upper) (FR-A846-03250(110K) or higher)

(1) Remove the inverter front cover. (Refer to page 15)

(2) Move the fan connector case, and then remove the fan connector.

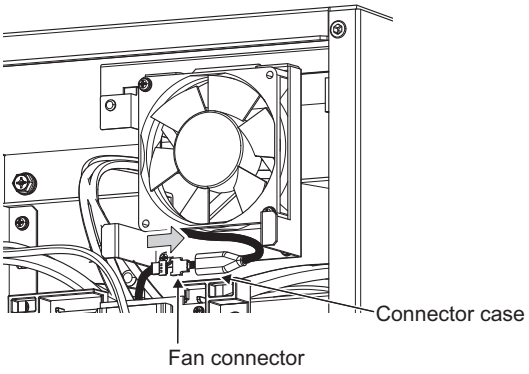

(3) Remove the installation screws, and then remove the bracket.

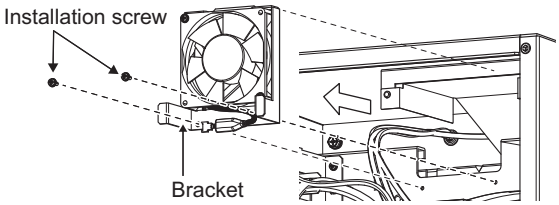

(4) Remove the installation screws, and then remove the fan.

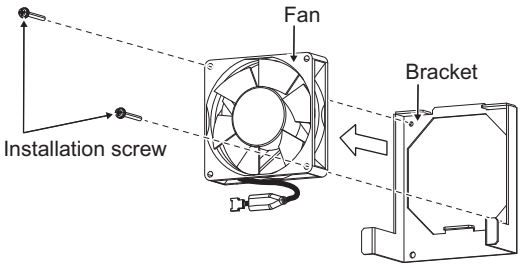

◆ Removal of the internal fan (lower) (FR-A846-03250(110K) or higher)

(1) Remove the inverter front cover. (Refer to page 15)

(2) Move the fan connector case, and then remove the fan connector.

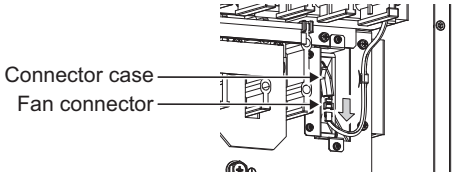

(3) Remove the installation screws, and then remove the bracket.

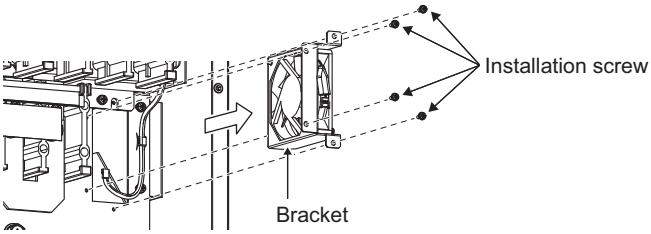

(4) Remove the installation screws, and then remove the fan.

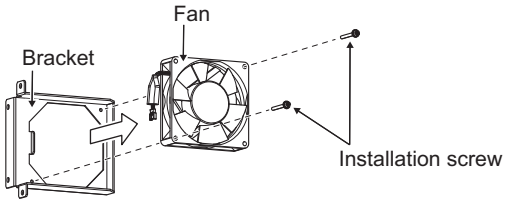

◆ Reinstallation of the internal fan (FR-A846-00170(5.5K) or lower)

(1) After confirming the orientation of the fan, fix the fan to the bracket with the installation screws so that the "AIR FLOW" arrow on the fan side faces up when the fan is installed to the inverter. (tightening torque 1.4 to 1.9 N•m)

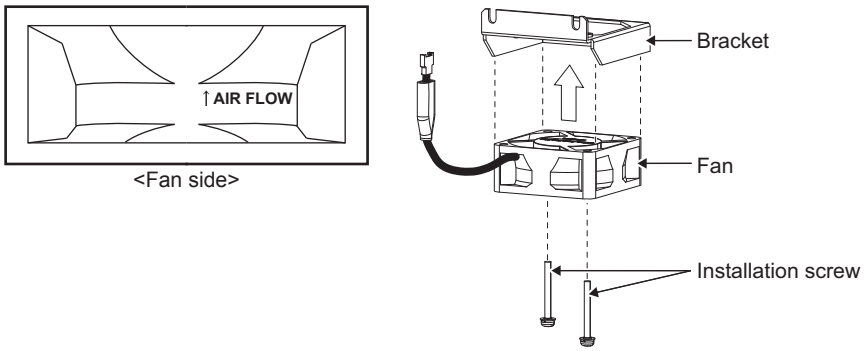

(2) Fix the bracket to the inverter with the installation screws. (tightening torque 1.4 to 1.9 N•m)

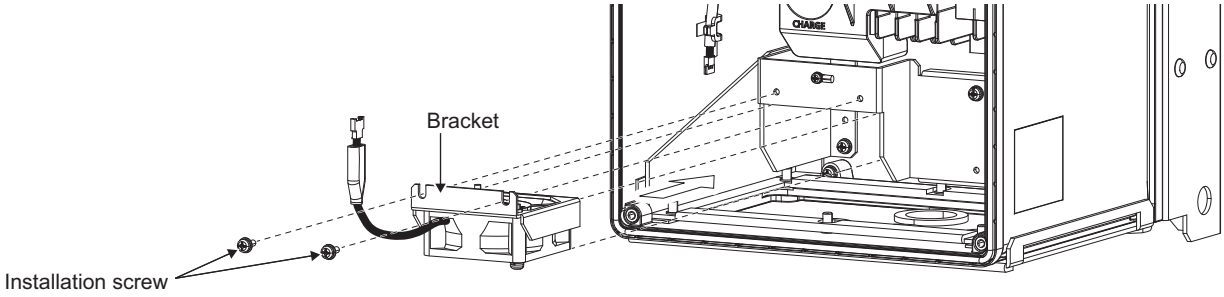

(3) Reconnect the fan connector, and then place the connector case from the above.

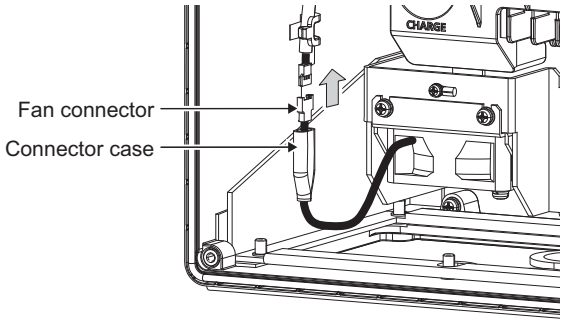

(4) Reinstall the inverter front cover. (Refer to page 15.)

NOTE

- Installing the fan in the opposite direction of air flow can cause the inverter life to be shorter.
- Prevent the cable from being caught when installing a fan.

◆ Reinstallation of the internal fan (FR-A846-00250(7.5K) to 00470(18.5K))

(1) After confirming the orientation of the fan, fix the fan to the bracket with the installation screws so that the "AIR FLOW" arrow on the fan side faces up when the fan is installed to the inverter. (tightening torque 1.4 to 1.9 N•m)

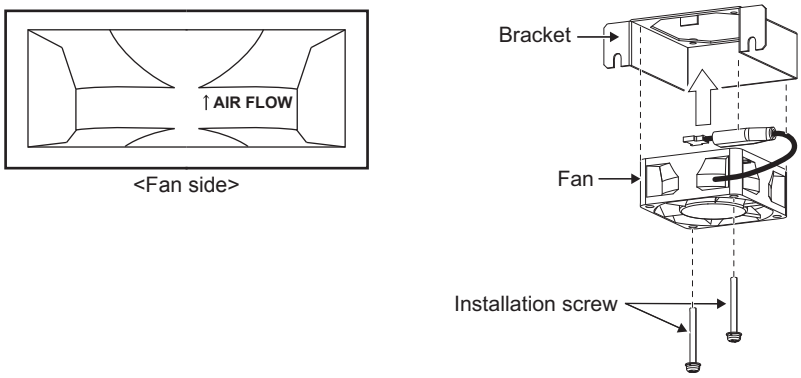

(2) Attach the bracket to the inverter.

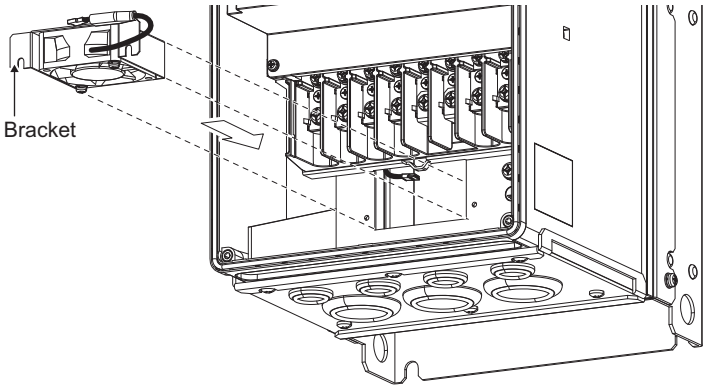

(3) Reconnect the fan connector, and then place the connector case from the above.

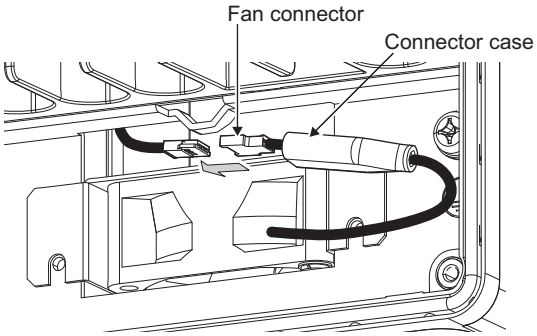

(4) Fix the protective cover with the installation screws. (tightening torque 1.4 to 1.9 N•m)

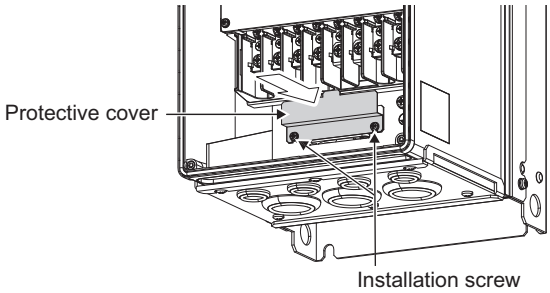

(5) Reinstall the inverter front cover. (Refer to page 15.)

NOTE

- Installing the fan in the opposite direction of air flow can cause the inverter life to be shorter.
- Prevent the cable from being caught when installing a fan.
- The wiring may contact the fan and be damaged. Always insert the protective cover.

◆ Reinstallation of the internal fan (FR-A846-00620(22K) to 01160(45K))

(1) Fix the fan to the inverter with the bracket and the installation screws. (tightening torque 1.4 to 1.9 N•m)
After confirming the orientation of the fan, reinstall the fan so that air flows as shown below.
(The "AIR FLOW" arrow on the fan side indicates the air flow direction.)

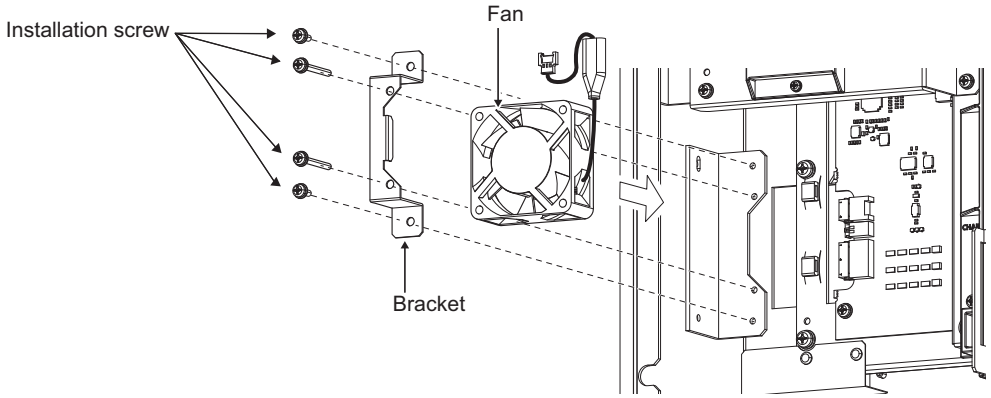

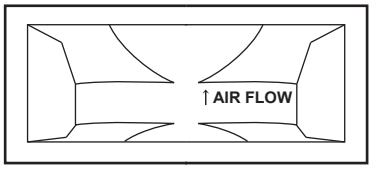

<Fan side>

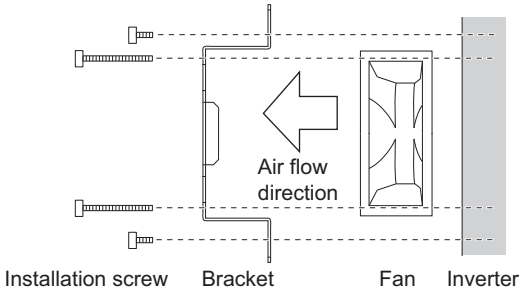

View of fan side and surrounding

(2) Reconnect the fan connector, and then place the connector case from the above.

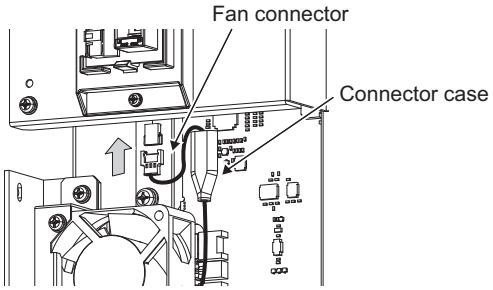

(3) Reinstall the inverter front cover. (Refer to page 15.)

NOTE

- Installing the fan in the opposite direction of air flow can cause the inverter life to be shorter.
- Prevent the cable from being caught when installing a fan.

◆ Reinstallation of the internal fan (upper) (FR-A846-01800(55K) to 02600(90K))

(1) Fix the fan to the inverter with the installation screws. (tightening torque 1.4 to 1.9 N•m)
After confirming the orientation of the fan, reinstall the fan so that air flows as shown below.
(The "AIR FLOW" arrow on the fan side indicates the air flow direction.)

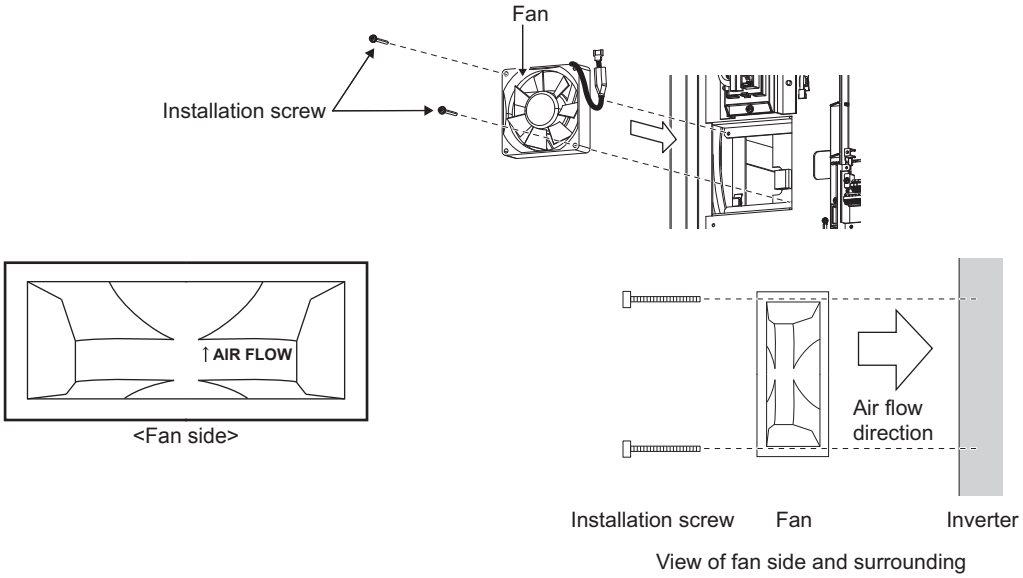

(2) Reconnect the fan connector, and then place the connector case from the above.

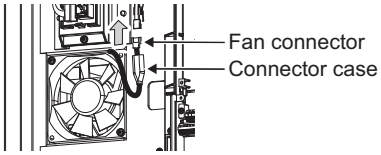

(3) Reinstall the inverter front cover. (Refer to page 15.)

NOTE

- Installing the fan in the opposite direction of air flow can cause the inverter life to be shorter.
- Prevent the cable from being caught when installing a fan.

◆ Reinstallation of the internal fan (lower) (FR-A846-01800(55K) to 02600(90K))

(1) Fix the fan to the bracket with the installation screws. (tightening torque 1.4 to 1.9 N•m)
After confirming the orientation of the fan, reinstall the fan so that air flows as shown below.
(The "AIR FLOW" arrow on the fan side indicates the air flow direction.)

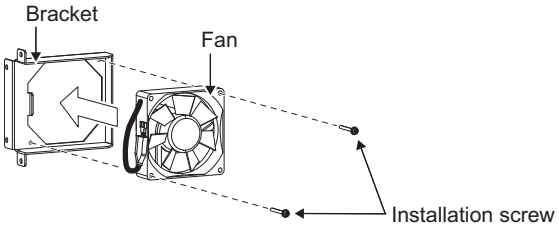

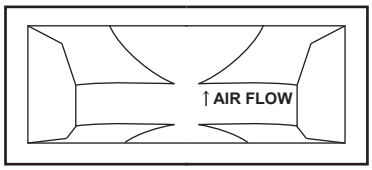

<Fan side>

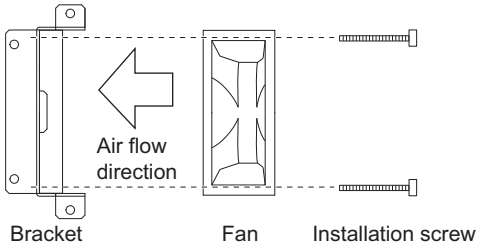

View of fan side and surrounding

(2) Attach the bracket to the inverter.

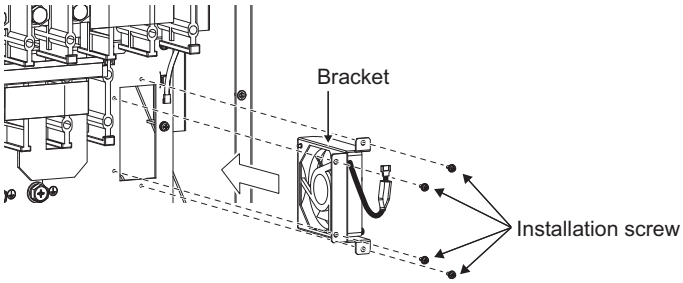

(3) Reconnect the fan connector, and then place the connector case from the above.

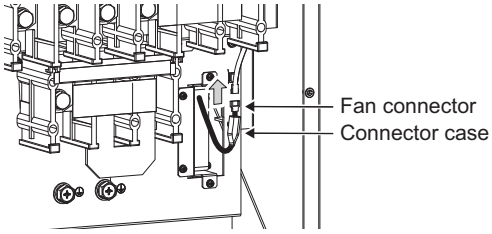

(4) Reinstall the inverter front cover. (Refer to page 15.)

NOTE

- Installing the fan in the opposite direction of air flow can cause the inverter life to be shorter.
- Prevent the cable from being caught when installing a fan.

◆ Reinstallation of the internal fan (upper) (FR-A846-03250(110K) or higher)

(1) Fix the fan to the bracket with the installation screws. (tightening torque 1.4 to 1.9 N•m)
After confirming the orientation of the fan, reinstall the fan so that air flows as shown below.
(The "AIR FLOW" arrow on the fan side indicates the air flow direction.)

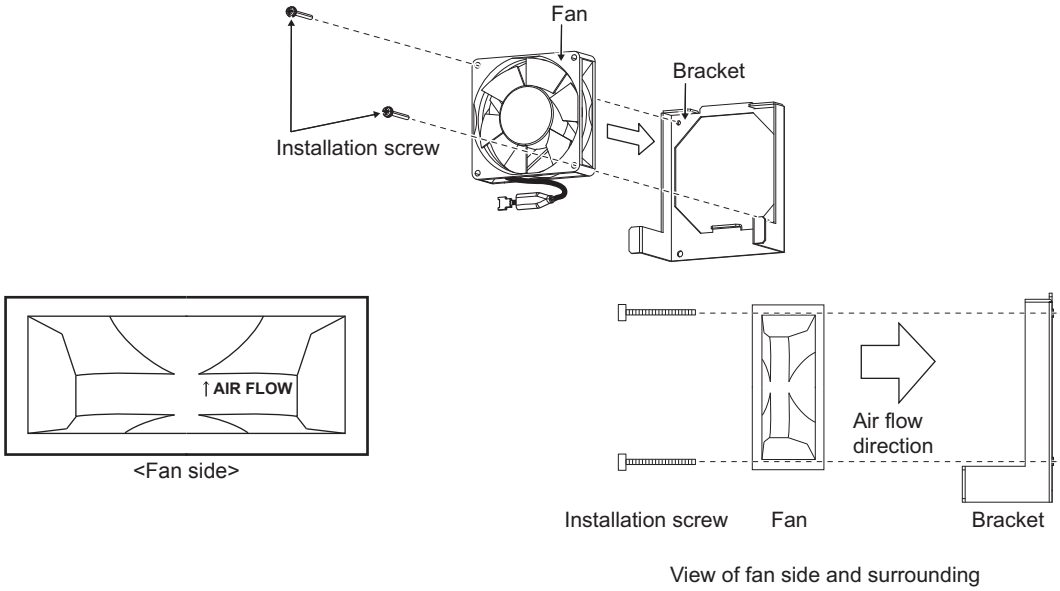

(2) Attach the bracket to the inverter.

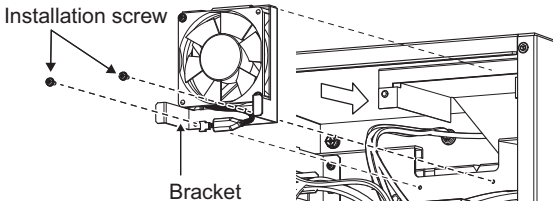

(3) Reconnect the fan connector, and then place the connector case from the above.

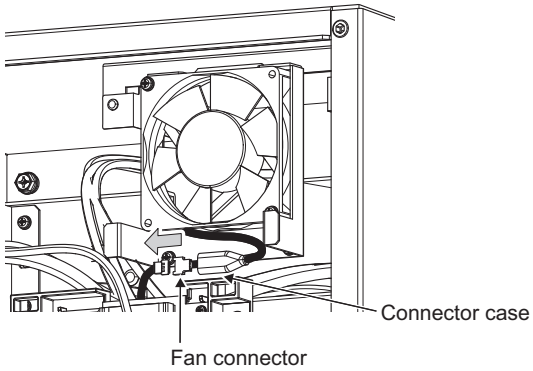

(4) Reinstall the inverter front cover. (Refer to page 15.)

NOTE

- Installing the fan in the opposite direction of air flow can cause the inverter life to be shorter.
- Prevent the cable from being caught when installing a fan.

◆ Reinstallation of the internal fan (lower) (FR-A846-03250(110K) or higher)

(1) Fix the fan to the bracket with the installation screws. (tightening torque 1.4 to 1.9 N•m)
After confirming the orientation of the fan, reinstall the fan so that air flows as shown below.
(The "AIR FLOW" arrow on the fan side indicates the air flow direction.)

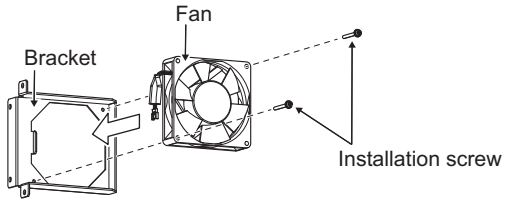

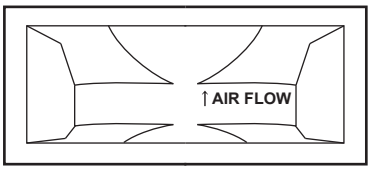

<Fan side>

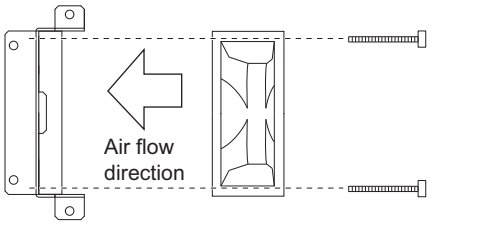

View of fan side and surrounding

(2) Attach the bracket to the inverter.

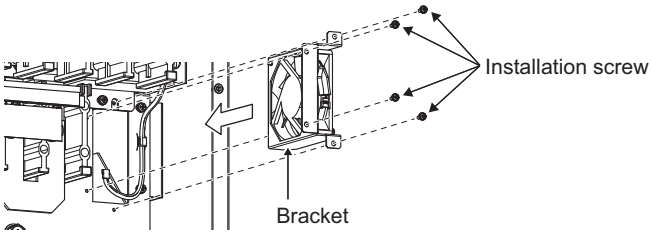

(3) Reconnect the fan connector, and then place the connector case from the above.

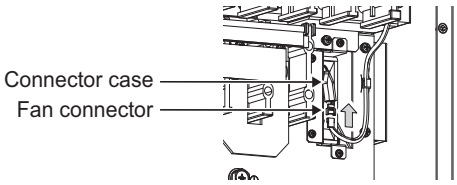

(4) Reinstall the inverter front cover. (Refer to page 15.)

NOTE

- Installing the fan in the opposite direction of air flow can cause the inverter life to be shorter.
- Prevent the cable from being caught when installing a fan.

◆Smoothing capacitors

A large-capacity aluminum electrolytic capacitor is used for smoothing in the DC section of the main circuit, and an aluminum electrolytic capacitor is used for stabilizing the control power in the control circuit. Adverse effects from ripple currents deteriorate capacitors. Replacement intervals of capacitors vary greatly with surrounding temperatures and operating conditions. Replace them roughly every 10 years when used in normal air-conditioned environments.

Inspecting the product visually:

- Case: Check that the sides and bottom of the capacitor have not ruptured.
- Rubber seal: Check for any noticeable bulging or severe cracks.
- Check for external cracks, discoloration, leakage, etc. It is assumed that the capacitor has reached the end of its life when its capacity has dropped below 80% of its rated capacity.

NOTE

- The inverter diagnoses the main circuit capacitor and control circuit capacitor by itself and can estimate its remaining life. Refer to the Instruction manual (Detailed).

◆Relay output terminals

- The contacts of relays deteriorate over time. To prevent faults from occurring, relays must be replaced when they have reached the maximum number of switching operations (switching life).
- The control terminal block must be replaced in case of failure of either relay between the relay output terminals C1 and B1 or A1, or terminals C2 and B2 or A2. After replacing the control terminal block, connect the jumper connector to the correct position in accordance with the control logic of input signals.

5.1.7 Removal and reinstallation of the control circuit terminal block

This product has a removable control circuit terminal block, which can be replaced with a new one or a control terminal option.

1) Loosen the two installation screws at the both side of the control circuit terminal block. (These screws cannot be removed.)
   Slide down the control circuit terminal block to remove it.

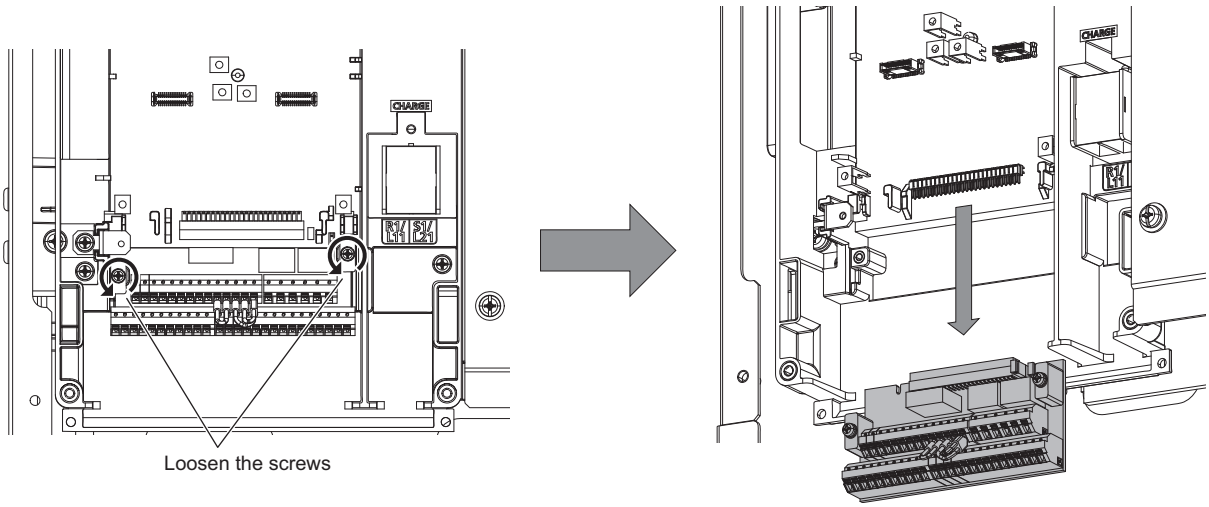

2) Be careful not to bend the pins of the inverter's control circuit connector, reinstall the control circuit terminal block and fix it with the mounting screws.

NOTE

- Before starting inverter replacement, switch OFF the power, wait for at least 10 minutes, and then check the voltage with a tester and such to ensure safety.

◆Removal and reinstallation precautions

Precautions to be taken when removing or reinstalling the control circuit terminal block are shown below. Observe the following precautions and handle the inverter properly to avoid malfunctions or failures.

- To remove or reinstall the control circuit terminal block, keep it upright so that it is parallel with the inverter.
- To install the control circuit terminal block, slide it upward so that the tongues on the inverter slot into the grooves on the terminal block.
- Check that the terminal block is parallel to the inverter and the pins on the inverter control circuit connector are not bent. After checking proper connection, fix the terminal block in place with two screws.

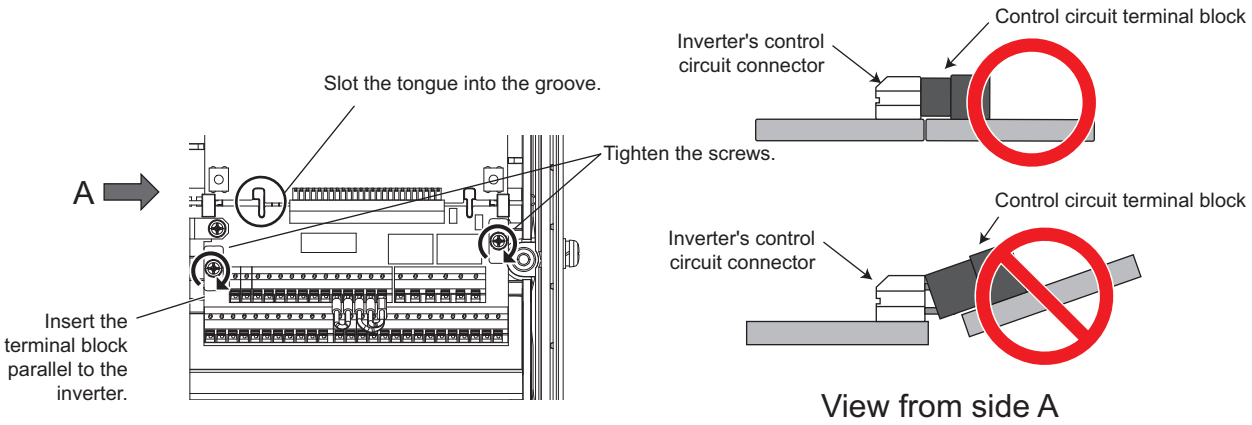

NOTE

- Do not tilt the terminal block while tightening the screws or removing it from the inverter. (Otherwise, a stress applied to the control circuit terminal block or the control circuit connector may cause damage to them.)
- After replacing the control terminal block, connect the jumper connector to the correct position in accordance with the control logic of input signals. (Refer to page 38.)

5.2 Measurement of main circuit voltages, currents, and powers

Since the voltages and currents on the inverter power supply and output sides include harmonics, measurement data depends on the instruments used and circuits measured.
When instruments for commercial frequency are used for measurement, measure the following circuits with the instruments given on the next page.

NOTE

- When installing meters etc. on the inverter output side
  When the inverter-to-motor wiring length is large, especially small-capacity models, the meters and CTs may generate heat due to line-to-line leakage current. Therefore, choose equipment which has enough capacity for the current rating.
  To measure and display the output voltage and output current of the inverter, it is recommended that the terminal AM and FM/CA output functions of the inverter are used.

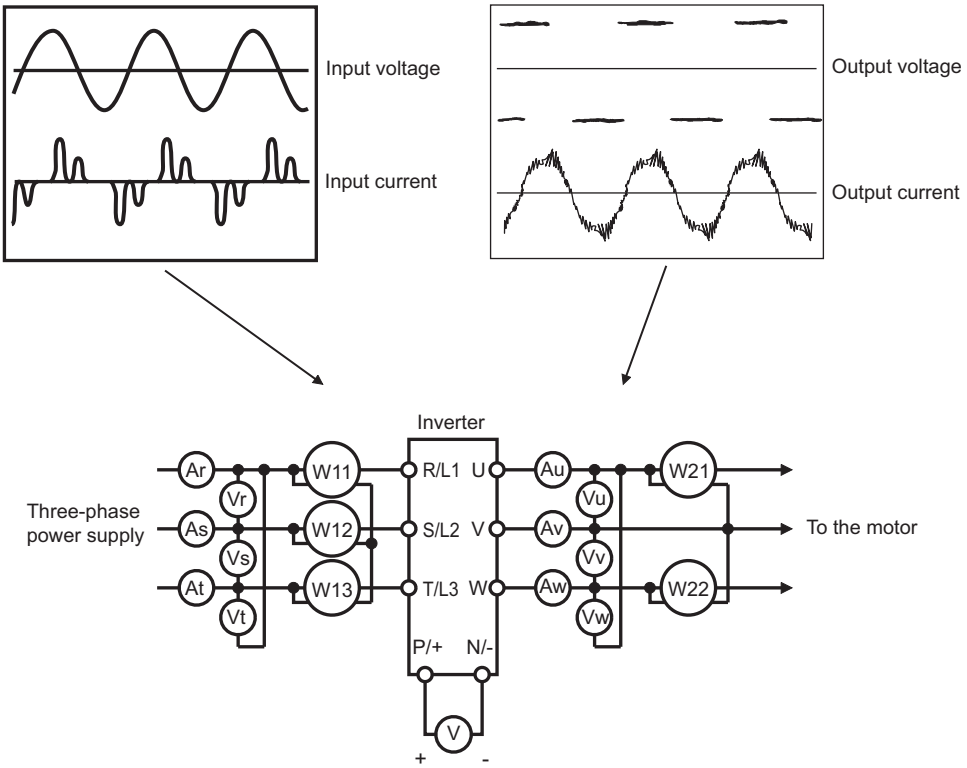

◆Measuring points and instruments

Item	Measuring point	Measuring instrument	Remarks (reference measured value)	
Power supply voltage V1	Across R/L1 and S/L2, S/L2 and T/L3, T/L3 and R/L1	Digital power meter (designed for inverter)	Commercial power supply Within permissible AC voltage fluctuation (Refer to page 128.)	
Power supply side current I1	R/L1, S/L2, T/L3 line current			
Power supply side power P1	R/L1, S/L2, T/L3 and Across R/L1 and S/L2, S/L2 and T/L3, T/L3 and R/L1		P1 = W11 + W12 + W13 (3-wattmeter method)	
Power supply side power factor Pf1	Calculate after measuring power supply voltage, power supply side current and power supply side power. $Pf_1 = \frac{P_1}{\sqrt{3}V_1 \times I_1} \times 100\,\%$			
Output side voltage V2	Across U and V, V and W, and W and U	Digital power meter (designed for inverter)*1	Difference between the phases is within 1% of the maximum output voltage.	
Output side current I2	U, V and W line currents		Difference between the phases is 10% or lower of the inverter rated current.	
Output side power P2	U, V, W and across U and V, V and W	Digital power meter (designed for inverter)	P2 = W21 + W22 2-wattmeter method (or 3-wattmeter method)	
Output side power factor Pf2	Calculate in similar manner to power supply side power factor. $Pf_2 = \frac{P_2}{\sqrt{3}V_2 \times I_2} \times 100\,\%$			
Converter output	Across P/+ and N/-	Digital multimeter or other tester	Inverter LED is lit. 1.35 × V1	
Frequency setting signal	Across 2, 4(+) and 5	Digital multimeter or other tester, or moving-coil type instrument (internal resistance 50 kΩ or more)	0 to 10 VDC, 4 to 20 mA	"5" is . common
	Across 1(+) and 5		0 to ±5 VDC and 0 to ±10 VDC	
Frequency setting power supply	Across 10(+) and 5		5.2 VDC	
	Across 10E(+) and 5		10 VDC	
Frequency meter signal	Across AM(+) and 5		Approximately 10 VDC at maximum frequency (without frequency meter)	
	Across CA(+) and 5		Approximately 20 mADC at maximum frequency	
	Across FM(+) and SD		Approximately 5 VDC at maximum frequency (without frequency meter) 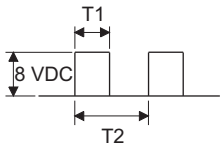 Pulse width T1: Adjust with **C0 (Pr.900)**. Pulse cycle T2: Set with **Pr.55**. (frequency monitor only)	"SD" is common
Start signal Select signal Reset signal Output stop signal	Across STF, STR, RH, RM, RL, JOG, RT, AU, STOP, CS, RES, MRS(+) and SD (for sink logic)		When open 20 to 30 VDC ON voltage: 1 V or less	
Fault signal	Across A1 and C1 Across B1 and C1	Digital multimeter or other tester	Continuity check*3 [Normal] / [Fault] Across A1 and C1: Discontinuity / Continuity Across B1 and C1: Continuity / Discontinuity	

*1 Use an FFT to measure the output voltage accurately. A tester or general measuring instrument cannot measure accurately.

*2 When the carrier frequency exceeds 5 kHz, do not use this instrument since using it may increase eddy current losses produced in metal parts inside the instrument, leading to burnout. In this case, use an approximate-effective value type.

*3 When the setting of **Pr.195 ABC1 terminal function selection** is the positive logic

5.2.1 Measurement of powers

Use digital power meters (for inverter) for the both of inverter input and output side.

5.2.2 Measurement of voltages

◆Inverter input side

Use digital power meters (for inverters) for the input side voltage.

◆Inverter output side

When using a measuring instrument, use a digital power meter for inverters as the inverter outputs PWM-controlled square wave voltage. The value monitored on the operation panel is the inverter-controlled voltage itself. Monitoring values via the operation panel or by outputting the analog signal is recommended as these values are accurate.

5.2.3 Measurement of currents

Use digital power meters (for inverter) both on the inverter's input and output sides.
Since the inverter input current tends to be unbalanced, measurement of three phases is recommended. The correct value cannot be obtained by measuring only one or two phases. On the other hand, the unbalanced ratio of each phase of the output current should be within 10%.
The inverter output current can be monitored on the operation panel. The value displayed on the operation panel is accurate even if the output frequency varies. Hence, it is recommended to monitor values on the operation panel.

5.2.4 Measurement of inverter input power factor

Calculate using effective power and apparent power. A power-factor meter cannot indicate an exact value.

$$\text{Total power factor of the inverter} = \frac{\text{Effective power}}{\text{Apparent power}} = \frac{\text{Three-phase input power found by the 3-wattmeter method}}{\sqrt{3} \times \text{V (power supply voltage)} \times \text{I (input current effective value)}}$$

5.2.5 Measurement of converter output voltage (across terminals P and N)

The output voltage of the converter is output across terminals P and N, and can be measured with a voltmeter such as a digital multimeter. Although the voltage varies according to the power supply voltage, approximately 540 VDC to 600 VDC is output when no load is connected and voltage decreases during driving load operation.
When energy is regenerated from the motor during deceleration, for example, the converter output voltage rises to nearly 800 VDC to 900 VDC maximum.

5.2.6 Measurement of inverter output frequency

In the initial setting of the FM-type inverter, a pulse train proportional to the output frequency is output across the pulse train output terminals FM and SD of the inverter. This pulse train output can be counted by a frequency counter, or a digital multimeter can be used to read the mean value of the pulse train output voltage. When a meter is used to measure the output frequency, approximately 5 VDC is indicated at the maximum frequency.
For detailed specifications of the pulse train output terminal FM, refer to the Instruction Manual (Detailed).
In the initial setting of the CA-type inverter, a pulse train proportional to the output frequency is output across the analog current output terminals CA and 5 of the inverter. Measure the current using a digital multimeter.
For detailed specifications of the analog current output terminal CA, refer to the Instruction Manual (Detailed).

5.2.7 Insulation resistance test using megger

For the inverter, conduct the insulation resistance test on the main circuit only as shown below and do not perform the test on the control circuit. (Use a 500 VDC megger.)

NOTE

- Before performing the insulation resistance test on the external circuit, disconnect the cables from all terminals of the inverter so that the test voltage is not applied to the inverter.
- For the continuity test of the control circuit, use a tester (high resistance range) and do not use the megger or buzzer.

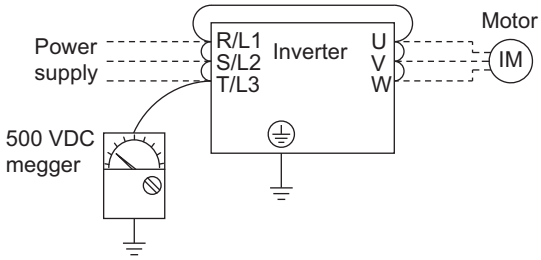

5.2.8 Pressure test

Do not conduct a pressure test. Deterioration may occur.

6 SPECIFICATIONS

This chapter explains the "SPECIFICATIONS" of this product.
Always read the instructions before using the equipment.

6.1 Inverter rating 128
6.2 Common specifications 129
6.3 Inverter outline dimension drawings 131

6.1 Inverter rating

Model FR-A846-[]			00023 (0.4K)	00038 (0.75K)	00052 (1.5K)	00083 (2.2K)	00126 (3.7K)	00170 (5.5K)	00250 (7.5K)	00310 (11K)	00380 (15K)	00470 (18.5K)	00620 (22K)	00770 (30K)	00930 (37K)	01160 (45K)	01800 (55K)	02160 (75K)	02600 (90K)	03250 (110K)	03610 (132K)
Applicable motor capacity (kW) *1		LD	0.75	1.5	2.2	3.7	5.5	7.5	11	15	18.5	22	30	37	45	55	75	90	110	132	160
		ND (initial setting)	0.4	0.75	1.5	2.2	3.7	5.5	7.5	11	15	18.5	22	30	37	45	55	75	90	110	132
Output	Rated capacity (kVA) *2	LD	1.6	2.7	3.7	5.8	8.8	12	18	22	27	33	43	53	65	81	110	137	165	198	248
		ND (initial setting)	1.1	1.9	3	4.6	6.9	9.1	13	18	24	29	34	43	54	66	84	110	137	165	198
	Rated current (A)	LD	2.1	3.5	4.8	7.6	11.5	16	23	29	35	43	57	70	85	106	144	180	216	260	325
		ND (initial setting)	1.5	2.5	4	6	9	12	17	23	31	38	44	57	71	86	110	144	180	216	260
	Overload current rating *3	LD	120% 60 s, 150% 3 s (inverse-time characteristics) at ambient temperature of 40°C																		
		ND (initial setting)	150% 60 s, 200% 3 s (inverse-time characteristics) at ambient temperature of 40°C																		
	Rated voltage *4		Three-phase 380 to 500 V																		
	Regenerative braking	Maximum brake torque *5	10% torque/continuous																		
Power supply	Rated input AC voltage/ frequency		Three-phase 380 to 500 V 50 Hz/60 Hz *8																		
	Permissible AC voltage fluctuation		323 to 550 V 50 Hz/60 Hz																		
	Permissible frequency fluctuation		±5%																		
	Rated input current (A) *6	LD	2.1	3.5	4.8	7.6	11.5	16	23	29	35	43	57	70	85	106	144	180	216	260	325
		ND (initial setting)	1.5	2.5	4	6	9	12	17	23	31	38	44	57	71	86	110	144	180	216	260
	Power supply capacity (kVA) *7	LD	1.6	2.7	3.7	5.8	9	12	18	22	27	33	43	53	65	81	110	137	165	198	248
		ND (initial setting)	1.1	1.9	3	4.6	6.9	9	13	18	24	29	34	43	54	66	102	110	137	165	198
Protective structure		IEC 60529	Dust- and water-proof type (IP55) *10																		
		UL50	UL Type12 *9																		
Cooling system			Self cooling + internal fan						Forced-air-cooling + internal fan												
DC reactor			Built-in																		
Approx. mass (kg)			15	15	15	15	16	17	26	26	27	27	59	60	63	64	147	150	153	189	193

*1 The applicable motor capacity indicated is the maximum capacity applicable for use of the Mitsubishi Electric 4-pole standard motor.

*2 The rated output capacity indicated assumes that the output voltage is 440 V.

*3 The % value of the overload current rating indicated is the ratio of the overload current to the inverter's rated output current. For repeated duty, allow time for the inverter and motor to return to or below the temperatures under 100% load.

*4 The maximum output voltage does not exceed the power supply voltage. The maximum output voltage can be changed within the setting range. However, the maximum point of the voltage waveform at the inverter output side is the power supply voltage multiplied by about $\sqrt{2}$.

*5 Value for the ND rating.

*6 The rated input current indicates a value at a rated output voltage. The impedance at the power supply side (including those of the input reactor and cables) affects the rated input current.

*7 The power supply capacity is the value when at the rated output current. It varies by the impedance at the power supply side (including those of the input reactor and cables).

*8 For the power voltage exceeding 480 V, set **Pr.977 Input voltage mode selection**. (For the details, refer to the Instruction Manual (Detailed).)

*9 UL Type 12 Enclosure-Suitable for Installation in a Compartment Handling Conditioned Air (Plenum)

*10 For compliance with IP55, remove the protective bushes and install the recommended cable glands.

6.2 Common specifications

Control specifications	Control method		Soft-PWM control, high carrier frequency PWM control (selectable among V/F control, Advanced magnetic flux vector control, Real sensorless vector control), Optimum excitation control, vector control*1, and PM sensorless vector control
	Output frequency range		0.2 to 590 Hz (The upper-limit frequency is 400 Hz under Advanced magnetic flux vector control, Real sensorless vector control, vector control*1, and PM sensorless vector control.)
	Frequency setting resolution	Analog input	0.015 Hz/60 Hz (0 to 10 V/12 bits for terminals 2 and 4) 0.03 Hz/60 Hz (0 to 5 V/11 bits or 0 to 20 mA/approx. 11 bits for terminals 2 and 4, 0 to ±10 V/12 bits for terminal 1) 0.06 Hz/60 Hz (0 to ±5 V/11 bits for terminal 1)
		Digital input	0.01 Hz
	Frequency accuracy	Analog input	Within ±0.2% of the max. output frequency (25°C ± 10°C)
		Digital input	Within 0.01% of the set output frequency
	Voltage/frequency characteristics		Base frequency can be set from 0 to 590 Hz. Constant-torque/variable-torque pattern or adjustable 5 points V/F can be selected.
	Starting torque		LD rating: 150% 0.3 Hz, ND rating: 200%*4 0.3 Hz (Real sensorless vector control, vector control*1)
	Torque boost		Manual torque boost
	Acceleration/deceleration time setting		0 to 3600 s (acceleration and deceleration can be set individually), linear or S-pattern acceleration/deceleration mode, backlash countermeasures acceleration/deceleration can be selected.
	DC injection brake (induction motor)		Operation frequency (0 to 120 Hz), operation time (0 to 10 s), operation voltage (0 to 30%) variable
	Stall prevention operation level		Activation range of stall prevention operation (LD rating: 0 to 150%, ND rating: 0 to 220%). Whether to use the stall prevention or not can be selected (V/F control, Advanced magnetic flux vector control)
	Torque limit level		Torque limit value can be set (0 to 400% variable). (Real sensorless vector control, vector control*1, PM sensorless vector control)
Operation specifications	Frequency setting signal	Analog input	Terminals 2 and 4: 0 to 10 V, 0 to 5 V, 4 to 20 mA (0 to 20 mA) are available. Terminal 1: -10 to +10 V, -5 to +5 V are available.
		Digital input	Input using the setting dial of the operation panel or parameter unit Four-digit BCD or 16-bit binary (when used with option FR-A8AX)
	Start signal		Forward and reverse rotation or start signal automatic self-holding input (3-wire input) can be selected.
	Input signals (twelve terminals)		Low-speed operation command, Middle-speed operation command, High-speed operation command, Second function selection, Terminal 4 input selection, Jog operation selection, Electronic bypass function, Output stop, Start self-holding selection, Forward rotation command, Reverse rotation command, Inverter reset The input signal can be changed using **Pr.178 to Pr.189 (input terminal function selection)**.
		Pulse train input	100k pulses/s
	Operational functions		Maximum and minimum frequency settings, multi-speed operation, acceleration/deceleration pattern, thermal protection, DC injection brake, starting frequency, JOG operation, output stop (MRS), stall prevention, regeneration avoidance, increased magnetic excitation deceleration, DC feeding, frequency jump, rotation display, automatic restart after instantaneous power failure, electronic bypass sequence, remote setting, automatic acceleration/deceleration, retry function, carrier frequency selection, fast-response current limit, forward/reverse rotation prevention, operation mode selection, slip compensation, droop control, load torque high-speed frequency control, speed smoothing control, traverse, auto tuning, applied motor selection, gain tuning, RS-485 communication, PID control, PID pre-charge function, easy dancer control, cooling fan operation selection, stop selection (deceleration stop/coasting), power-failure deceleration stop function, stop-on-contact control, PLC function, life diagnosis, maintenance timer, current average monitor, multiple rating, orientation control*1, speed control, torque control, position control, pre-excitation, torque limit, test run, 24 V power supply input for control circuit, safety stop function, anti-sway control
	Output signal Open collector output (five terminals) Relay output (two terminals)		Inverter running, Up to frequency, Instantaneous power failure/undervoltage, Overload warning, Output frequency detection, Fault The output signal can be changed using **Pr.190 to Pr.196 (output terminal function selection)**. Fault codes of the inverter can be output (4 bits) from the open collector.
		Pulse train output	50k pulses/s
Indication	For meter	Pulse train output (FM type)	Max. 2.4 kHz: one terminal (output frequency) The monitored item can be changed using **Pr.54 FM/CA terminal function selection.**
		Current output (CA type)	Max. 20 mADC: one terminal (output frequency) The monitored item can be changed using **Pr.54 FM/CA terminal function selection.**
		Voltage output	Max. 10 VDC: one terminal (output frequency) The monitored item can be changed using **Pr.158 AM terminal function selection**.
	Operation panel	Operating status	Output frequency, Output current, Output voltage, Frequency setting value The monitored item can be changed using **Pr.52 Operation panel main monitor selection**.
		Fault record	Fault record is displayed when a fault occurs. Past 8 fault records (output voltage/current/frequency/ cumulative energization time immediately before the fault occurs) are stored.

Common specifications

Protective/ warning function	Protective function	Overcurrent trip during acceleration, Overcurrent trip during constant speed, Overcurrent trip during deceleration or stop, Regenerative overvoltage trip during acceleration, Regenerative overvoltage trip during constant speed, Regenerative overvoltage trip during deceleration or stop, Inverter overload trip, Motor overload trip, Heat sink overheat, Instantaneous power failure, Undervoltage, Input phase loss*3, Stall prevention stop, Loss of synchronism detection*3, Brake transistor alarm detection, Upper limit fault detection, Lower limit fault detection, Output side earth (ground) fault overcurrent, Output short circuit, Output phase loss, External thermal relay operation*3, PTC thermistor operation*3, Option fault, Communication option fault, Parameter storage device fault (control circuit board), PU disconnection, Retry count excess*3, Parameter storage device fault (main circuit board), CPU fault, Operation panel power supply short circuit/RS-485 terminals power supply short circuit, 24 VDC power fault, Abnormal output current detection*3, Inrush current limit circuit fault, Communication fault (inverter), Analog input fault, USB communication fault, Safety circuit fault, Overspeed occurrence*3, Speed deviation excess detection*1*3, Signal loss detection*1*3, Excessive position fault*1*3, Brake sequence fault*3, Encoder phase fault*1*3, 4 mA input fault*3, Pre-charge fault*3, PID signal fault*3, Option fault, Opposite rotation deceleration fault*3, Internal circuit fault, User definition error by the PLC function, Abnormal internal temperature, Magnetic pole position unknown*1, External fault during output operation*3
	Warning function	Fan alarm, Stall prevention (overcurrent), Stall prevention (overvoltage), Electronic thermal relay function pre-alarm, PU stop, Speed limit indication*3, Safety stop, Maintenance signal output*3, USB host error, Home position return setting error*3, Home position return uncompleted*3, Home position return parameter setting error*3, Operation panel lock*3, Password locked*3, Parameter write error, Copy operation error, Internal-circulation fan alarm, Continuous operation during communication fault
Environment	Ambient temperature	-10°C to +40°C (non-freezing)
	Surrounding air humidity	95% RH or less (non-condensing),
	Storage temperature*2	-20°C to +65°C
	Atmosphere	Indoors (without corrosive gas, flammable gas, oil mist, dust and dirt, etc.)
	Altitude/vibration	Maximum 2500 m (For the installation at an altitude above 1000 m, consider a 3% reduction in the rated current per 500 m increase in altitude.) 5.9 m/s^2*5 or less at 10 to 55 Hz (in X, Y, and Z directions)

*1 Available when a vector control compatible option is mounted.

*2 Temperature applicable for a short time, e.g. in transit.

*3 This protective function is not available in the initial status.

*4 In the initial setting for the the FR-A846-00170(5.5K) or higher, it is limited to 150% by the torque limit level.

*5 2.9 m/s^2 or less for the FR-A846-01800(55K) or higher.

6.3 Inverter outline dimension drawings

FR-A846-00023(0.4K) to 00170(5.5K)

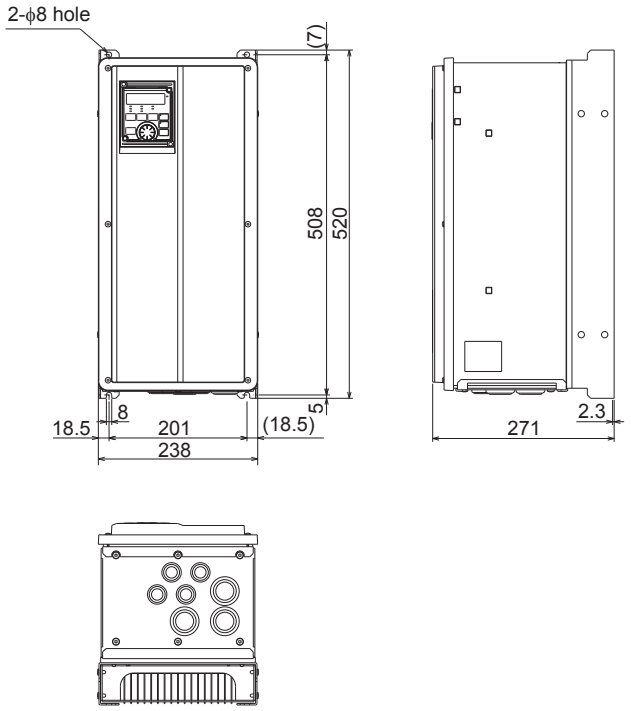

(Unit: mm)

FR-A846-00250(7.5K) to 00470(18.5K)

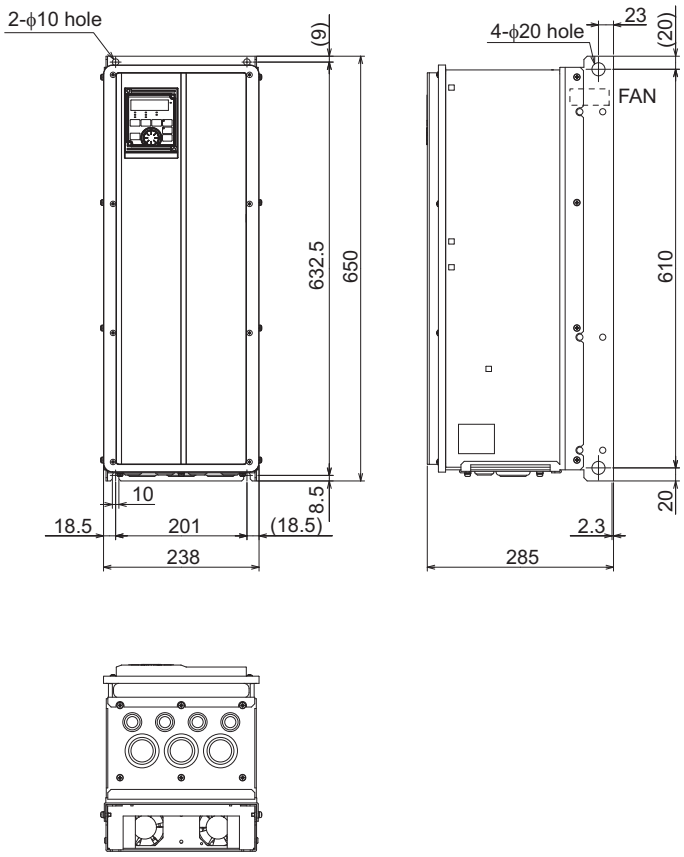

(Unit: mm)

Inverter outline dimension drawings

FR-A846-00620(22K) to 01160(45K)

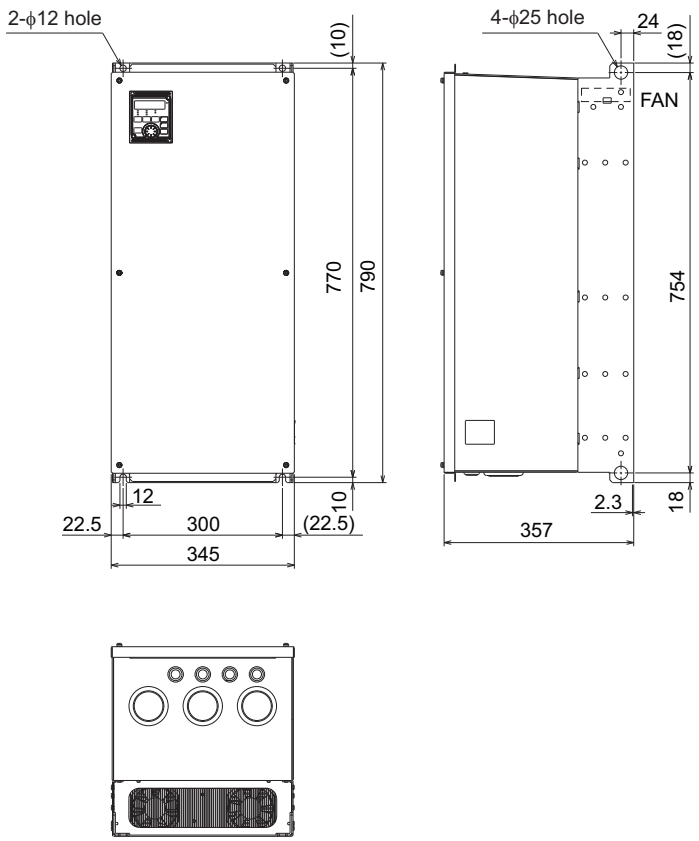

(Unit: mm)

FR-A846-01800(55K) to 03610(132K)

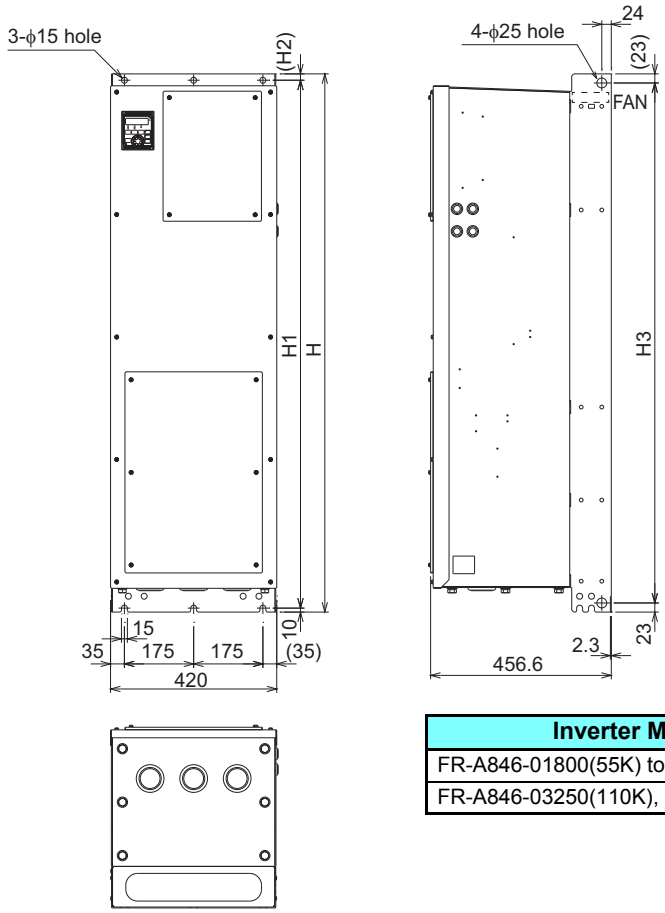

Inverter Model	H	H1	H2	H3
FR-A846-01800(55K) to 02600(90K)	1360	1334	16	1314
FR-A846-03250(110K), 03610(132K)	1510	1482	18	1464

(Unit: mm)

Operation panel (FR-DU08-01)

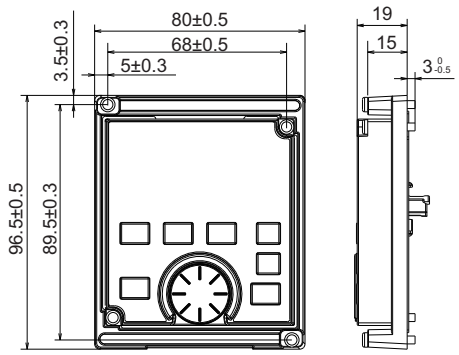

(Unit: mm)

NOTE

- For the outline dimensions of the dedicated motors, refer to the Instruction Manual (Detailed).

MEMO

APPENDIX

APPENDIX provides the reference information for use of this product.
Refer to APPENDIX as required.

Appendix 1 Differences and compatibility with the FR-A840 136
Appendix 2 Instructions for compliance with the EU Directives..137
Appendix 3 Instructions for UL and cUL 141
Appendix 4 Instructions for EAC.....143
Appendix 5 Restricted Use of Hazardous Substances in Electronic and Electrical Products 144
Appendix 6 Referenced Standard (Requirement of Chinese standardized law) 144

Appendix 1 Differences and compatibility with the FR-A840

Item	FR-A840	FR-A846
Protective structure	Enclose type (IP20): FR-A840-00620(22K) or lower Open type (IP00): FR-A840-00770(30K) or higher	Dust- and water-proof type (IP55): all capacities
Multiple rating (Pr.570 Multiple rating setting)	SLD, LD, ND (initial setting), HD rating (Setting range “0 to 3”)	LD, ND rating (initial setting) (Setting range “1, 2”)
Brake transistor (brake resistor usable)	Built in for FR-A820-00046(0.4K) to 01250(22K) Built in for FR-A840-00023(0.4K) to 03160(55K)	None (the use of brake resistor is unavailable)
Internal fan	None	Provided
Protective function	—	Internal-circulation fan alarm (FN2), Abnormal internal temperature (E.IAH) provided
Pr.30 Regenerative function selection	Setting range “0 to 2, 10, 11, 20, 21, 100 to 102, 110, 111, 120, 121”	Setting range “0, 2, 10, 20, 100, 110, 120”
Pr.70 Special regenerative brake duty	Provided	None
Regenerative brake duty (setting value "9" in Pr.52, Pr.54, Pr.158, Pr.774 to Pr.776, Pr.992, Pr.1027 to Pr.1034)	Provided (setting available)	None (setting unavailable)
DC reactor	Option	Built-in
Operation panel	FR-DU08: IP40 (except for the PU connector section)	FR-DU08-01: IP55 (except for the PU connector section)

Appendix 2 Instructions for compliance with the EU Directives

The EU Directives are issued to standardize different national regulations of the EU Member States and to facilitate free movement of the equipment, whose safety is ensured, in the EU territory.
Since 1996, compliance with the EMC Directive that is one of the EU Directives has been legally required. Since 1997, compliance with the Low Voltage Directive, another EU Directive, has been also legally required. When a manufacturer confirms its equipment to be compliant with the EMC Directive and the Low Voltage Directive, the manufacturer must declare the conformity and affix the CE marking.

- The authorized representative in the EU
  The authorized representative in the EU is shown below.
  Name: Mitsubishi Electric Europe B.V.
  Address: Mitsubishi-Electric-Platz 1, 40882 Ratingen, Germany

◆EMC Directive

We declare that this inverter conforms with the EMC Directive and affix the CE marking on the inverter.

- EMC Directive: 2014/30/EU
- Standard(s): EN 61800-3:2004+A1:2012 (First environment / PDS Category "C2", Second environment / PDS Category "C3"*1)

  *1 The applicable standard depends on the built-in EMC filter.
- Please ensure you choose the right inverter for the intended environment. Ensure the inverter is suitable for the environment in which it is to be used when using it in residential areas.
- The installer shall provide a guide for installation and use, including recommended mitigation devices.

Note:
First environment
Environment including buildings/facilities which are directly connected to a low voltage main supply which also supplies residential buildings. Directly connected means that there is no intermediate transformer between these buildings.
Second environment
Environment including all buildings/facilities which are not directly connected to a low voltage main supply which also supplies residential buildings.

◆ Note

Ensure the EMC filter is enabled, install the product as stated below, and then carry out any wiring.

- This inverter is equipped with an EMC filter. Enable the EMC filter. (For details, refer to page 80.)
- Connect the inverter to an earthed (grounded) power supply.
- Install the motor and controller cable found in the EMC Installation Manual (BCN-A21041-204) and Technical News (MF-S-119) according to the instruction.
- Ensure that the finalized system complies with the EMC Directive.
- The FR-A846 models are equipped with a harmonic suppression DC-choke. If the inverter has an input current of 16 A or less, limits for harmonic current emissions of EN/IEC 61000-3-2 shall apply. For professional equipment with a total rated power of 1 kW or higher, the limits for harmonic current emissions of EN/IEC 61000-3-2 shall not apply. If the equipment input current is more than 16 A and does not exceed 75 A, the equipment complies with EN/IEC 61000-3-12 provided that the short-circuit power Ssc is greater than or equal to the value provided in the table below at the interface point between the user's supply and the public system. It is the responsibility of the installer or user of the equipment to ensure, by consultation with the distribution network operator if necessary, that the equipment is connected only to a supply with a short-circuit power Ssc greater than or equal to the value mentioned in the table below. If the equipment input current is more than 75 A and the power supply capacity is 100 kVA or more, limits for the harmonic current emissions of IEC 61000-3-4 shall apply. However, the equipment complies with IEC 61000-3-4 provided that the short-circuit ratio Rsce is greater than or equal to the value provided in the table below.

Inverter model	Standard	Ssc	Rsce
FR-A846-00023(0.4K)	EN/IEC 61000-3-2	—	—
FR-A846-00250(7.5K)	EN/IEC 61000-3-12	2261 kVA	≥120
FR-A846-00310(11K)		3059 kVA	
FR-A846-00380(15K)		4124 kVA	
FR-A846-00470(18.5K)		5055 kVA	
FR-A846-00620(22K)		5853 kVA	
FR-A846-00770(30K)		7582 kVA	
FR-A846-00930(37K)		9445 kVA	
FR-A846-01160(45K)		11440 kVA	
FR-A846-01800(55K)		14632 kVA	
FR-A846-02160(75K)	IEC 61000-3-4	—	≥350
FR-A846-02600(90K)		—	
FR-A846-03250(110K)		—	
FR-A846-03610(132K)		—	

*1 Limitations of voltage variations, voltage fluctuations, and flickering for the low-voltage power supply systems are specified as shown below.

Inverter model	Standard	Remarks
FR-A846-00023(0.4K)	EN/IEC 61000-3-3	
FR-A846-00038(0.75K)		
FR-A846-00052(1.5K)		
FR-A846-00083(2.2K)		
FR-A846-00126(3.7K)		
FR-A846-00170(5.5K)		
FR-A846-00250(7.5K)		
FR-A846-00310(11K)		
FR-A846-00380(15K)		
FR-A846-00470(18.5K)		
FR-A846-00620(22K)	EN/IEC 61000-3-11	The equipment is intended for use only in premises having a supply current capacity ≥100 A per phase.
FR-A846-00770(30K)		
FR-A846-00930(37K)		
FR-A846-01160(45K)	—	
FR-A846-01800(55K)	—	
FR-A846-02160(75K)	—	
FR-A846-02600(90K)	—	
FR-A846-03250(110K)	—	
FR-A846-03610(132K)	—	

◆Low Voltage Directive

We have self-confirmed our inverters as products compliant to the Low Voltage Directive and affix the CE marking on the inverters.

- Low Voltage Directive: 2014/35/EU
- Conforming standard: EN 61800-5-1:2007

◆Outline of instructions

- Do not use an earth leakage current breaker as an electric shock protector without connecting the equipment to the earth. Connect the equipment to the earth securely.
- Wire the earth terminal independently. (Do not connect two or more cables to one terminal.)
- Use the cable sizes on page 31 under the following conditions.
  - Ambient temperature: 40°C maximum

  If conditions are different from above, select appropriate wire according to EN 60204-1, IEC 60364-5-52.
- Use a tinned (plating should not include zinc) crimping terminal to connect the earth (ground) cable. When tightening the screw, be careful not to damage the threads.
- For use as a product compliant with the Low Voltage Directive, use PVC cable whose size is indicated on page 31.
- Use the molded case circuit breaker and magnetic contactor which conform to the EN or IEC Standard.
- DC current may flow from the inverter to a protective earth (ground) conductor. When using a residual current device (RDC) or residual current monitor (RDM), connect a type B RCD or RCM to the power supply side.
- Use the inverter under the conditions of overvoltage category II (usable regardless of the earth (ground) condition of the power supply), overvoltage category III (usable with the earthed-neutral system power supply, 400 V class only) and pollution degree 2 or lower specified in IEC 60664.
- On the input and output of the inverter, use cables of the type and size set forth in EN 60204-1, IEC 60364-5-52.
- The operating capacity of the relay outputs (terminal symbols A1, B1, C1, A2, B2, C2) should be 30 VDC, 0.3 A. (Relay output has basic isolation from the inverter internal circuit.)
- Control circuit terminals on page 22 are safely isolated from the main circuit.
- Environment (For the detail, refer to page 18.)

	During Operation	In Storage	During Transportation
Ambient temperature	-10 to +40°C	-20 to +65°C	-20 to +65°C
Ambient humidity	95% RH or less	95% RH or less	95% RH or less
Maximum altitude	2500 m*1	2500 m	10000 m

*1 For installation at an altitude above 1000 m, consider a 3% reduction in the rated current per 500 m increase in altitude.

- Install the inverter at a place where ultraviolet radiation is not applied directly.

◆Wiring protection

Class T, Class J, Class CC fuse, or UL 489 Molded Case Circuit Breaker (MCCB) must be provided.
(Use a product which conforms to the EN or IEC Standard.)

FR-A846-[]	00023 (0.4K)	00038 (0.75K)	00052 (1.5K)	00083 (2.2K)	00126 (3.7K)	00170 (5.5K)	00250 (7.5K)	00310 (11K)	00380 (15K)	00470 (18.5K)
Rated fuse voltage (V)	500 V or more									
Fuse allowable rating (A)	6	10	10	15	25	35	60	70	90	100
Molded case circuit breaker (MCCB) Maximum allowable rating (A) *1	15	15	15	20	30	40	60	70	90	100

FR-A846-[]	00620 (22K)	00770 (30K)	00930 (37K)	01160 (45K)	01800 (55K)	02160 (75K)	02600 (90K)	03250 (110K)	03610 (132K)
Rated fuse voltage (V)	500 V or more								
Fuse allowable rating (A)	125	150	175	200	250	300	350	400	500
Molded case circuit breaker (MCCB) Maximum allowable rating (A) *1	150	175	225	250	450	450	500	—	—

*1 Maximum allowable rating by US National Electrical Code. Exact size must be chosen for each installation.

◆Short circuit ratings

- 400 V class

  Suitable For Use in A Circuit Capable of Delivering Not More Than 100 kA rms Symmetrical Amperes, 500 V Maximum.

◆Motor overload protection

When using the electronic thermal relay function as motor overload protection, set the rated motor current in **Pr.9 Electronic thermal O/L relay**.

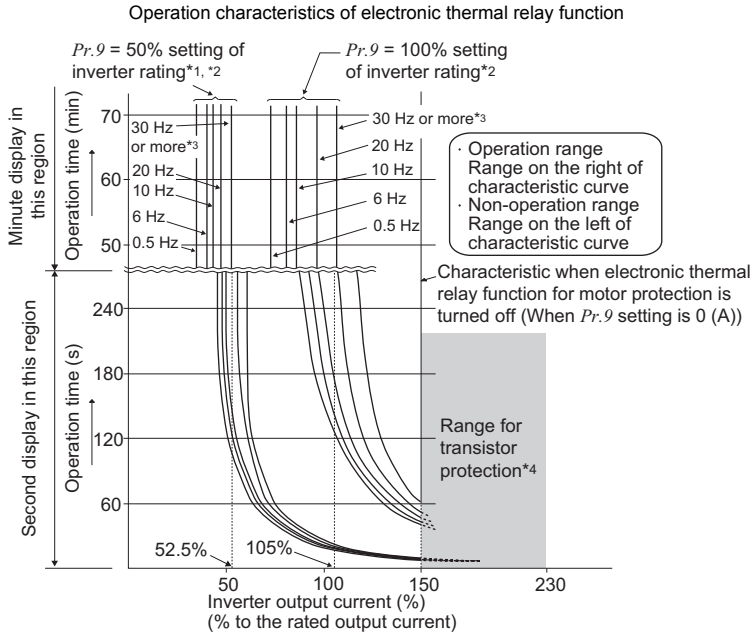

This function detects the overload of the motor, stops the operation of the inverter's output transistor, and stops the output. (The operation characteristic is shown on the left.)

- When using the Mitsubishi Electric constant-torque motor

(1) Set one of "1", "13" to "16", "50", "53", "54" in **Pr.71**. (This provides a 100% continuous torque characteristic in the low-speed range.)

(2) Set the rated current of the motor in **Pr.9**.

*1 When a value 50% of the inverter rated output current (current value) is set in **Pr.9**

*2 The % value denotes the percentage to the inverter rated current. It is not the percentage to the rated motor current.

*3 When you set the electronic thermal relay function dedicated to the Mitsubishi Electric constant-torque motor, this characteristic curve applies to operation at 6 Hz or higher.

*4 Transistor protection is activated depending on the temperature of the heat sink. The protection may be activated even with less than 150% depending on the operating conditions.

NOTE

- The internal accumulated heat value of the electronic thermal relay function is reset by inverter power reset and reset signal input. Avoid unnecessary reset and power-OFF.
- When multiple motors are driven with a single inverter or when a multi-pole motor or a special motor is driven, install an external thermal relay (OCR) between the inverter and motors. Note that the current indicated on the motor rating plate is affected by the line-to-line leakage current (refer to page 76) when selecting the setting for an external thermal relay.
- The cooling effect of the motor drops during low-speed operation. Use a thermal protector or a motor with built-in thermistor.
- When the difference between the inverter and motor capacities is large and the setting is small, the protective characteristics of the electronic thermal relay function will be deteriorated. In this case, use an external thermal relay.
- A special motor cannot be protected by the electronic thermal relay function. Use an external thermal relay.
- Set **Pr.9** = "0" for vector-control-dedicated motors (SF-V5RU) because they are equipped with thermal protectors.
- Motor over temperature sensing is not provided by the drive.
- Electronic thermal memory retention function is not provided by the drive.

Appendix 3 Instructions for UL and cUL

(Standard to comply with: UL 508C, CSA C22.2 No.274-13)

◆General precaution

CAUTION - Risk of Electric Shock -

The bus capacitor discharge time is 10 minutes. Before starting wiring or inspection, switch power off, wait for more than 10 minutes.

ATTENTION - Risque de choc électrique -

La durée de décharge du condensateur de bus est de 10 minutes. Avant de commencer le câblage ou l'inspection, mettez l'appareil hors tension et attendez plus de 10 minutes.

◆Installation

The below types of inverter have been approved as products for a UL type 12 enclosure that is suitable for Installation in a Compartment Handling Conditioned Air (Plenum).

Install the inverter so that the ambient temperature, humidity and ambience of the inverter will satisfy the specifications. (Refer to page 18.)

The drive must be installed in clean air according to enclosure classification.

Cooling air must be clean, free from corrosive materials and electrically conductive dust regarding the UL Type 12 enclosure.

This enclosure provides protection from airborne dust and light sprays or splashing water from all directions.

◆Branch circuit protection

For installation in the United States, Class T, Class J, or Class CC fuses, or UL 489 Molded Case Circuit Breaker (MCCB) must be provided, in accordance with the National Electrical Code and any applicable local codes.

For installation in Canada, Class T, Class J, or Class CC fuses, or UL 489 Molded Case Circuit Breaker (MCCB) must be provided, in accordance with the Canadian Electrical Code and any applicable local codes.

FR-A846-[]	00023 (0.4K)	00038 (0.75K)	00052 (1.5K)	00083 (2.2K)	00126 (3.7K)	00170 (5.5K)	00250 (7.5K)	00310 (11K)	00380 (15K)	00470 (18.5K)
Rated fuse voltage (V)	500 V or more									
Fuse allowable rating (A)	6	10	10	15	25	35	60	70	90	100
Molded case circuit breaker (MCCB) Maximum allowable rating (A) *1*2	15	15	15	20	30	40	60	70	90	100

FR-A846-[]	00620 (22K)	00770 (30K)	00930 (37K)	01160 (45K)	01800 (55K)	02160 (75K)	02600 (90K)	03250 (110K)	03610 (132K)
Rated fuse voltage (V)	500 V or more								
Fuse allowable rating (A)	125	150	175	200	250	300	350	400	500
Molded case circuit breaker (MCCB) Maximum allowable rating (A) *1*2	150	175	225	250	450	450	500	—	—

*1 Maximum allowable rating by the US National Electrical Code. Exact size must be chosen for each installation.

*2 Select an appropriate molded case circuit breaker with a rating that is suitable for the size of the cable.

◆Wiring to the power supply and the motor

Refer to the National Electrical Code (Article 310) regarding the allowable current of the cable. Select the cable size for 125% of the rated current according to the National Electrical Code (Article 430).

For wiring the input (R/L1, S/L2, T/L3) and output (U, V, W) terminals of the inverter, use the UL listed copper, stranded wires (rated at 75°C) and round crimping terminals. Crimp the crimping terminals with the crimping tool recommended by the terminal maker.

◆Short circuit ratings

- 400 V class

  Suitable for use in a circuit capable of delivering not more than 100 kA rms symmetrical amperes, 500 V maximum.

◆Motor overload protection

When using the electronic thermal relay function as motor overload protection, set the rated motor current in **Pr.9 Electronic thermal O/L relay**.

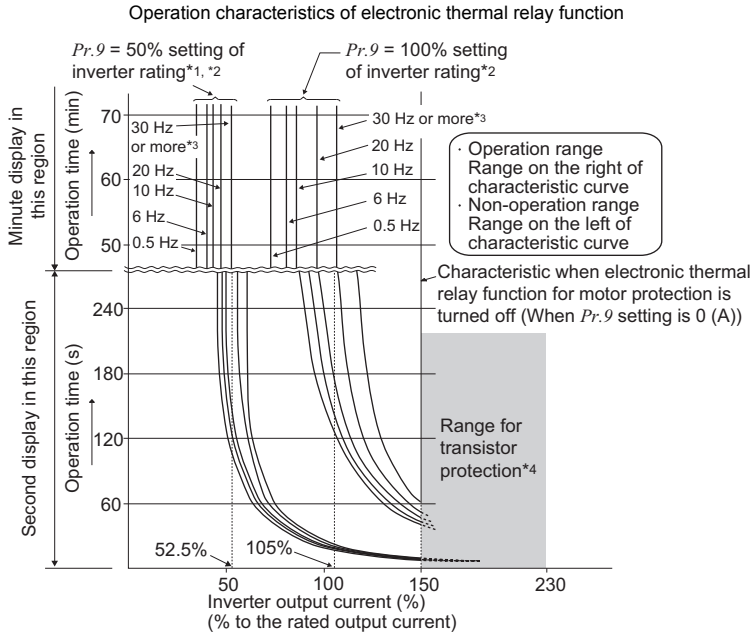

This function detects the overload (overheat) of the motor, stops the operation of the inverter's output transistor, and stops the output. (The operation characteristic is shown on the left.)

- When using the Mitsubishi Electric constant-torque motor

(1) Set one of "1", "13" to "16", "50", "53", "54" in **Pr.71**. (This provides a 100% continuous torque characteristic in the low-speed range.)

(2) Set the rated current of the motor in **Pr.9**.

*1 When a value 50% of the inverter rated output current (current value) is set in **Pr.9**.

*2 The % value denotes the percentage to the inverter rated current. It is not the percentage to the rated motor current.

*3 When you set the electronic thermal relay function dedicated to the Mitsubishi Electric constant-torque motor, this characteristic curve applies to operation at 6 Hz or higher.

*4 Transistor protection is activated depending on the temperature of the heat sink. The protection may be activated even with less than 150% depending on the operating conditions.

NOTE

- The internal accumulated heat value of the electronic thermal relay function is reset by inverter power reset and reset signal input. Avoid unnecessary reset and power-OFF.
- When multiple motors are driven with a single inverter or when a multi-pole motor or a special motor is driven, install an external thermal relay (OCR) between the inverter and motors. Note that the current indicated on the motor rating plate is affected by the line-to-line leakage current (refer to page 76) when selecting the setting for an external thermal relay.
- The cooling effect of the motor drops during low-speed operation. Use a thermal protector or a motor with built-in thermistor.
- When the difference between the inverter and motor capacities is large and the setting is small, the protective characteristics of the electronic thermal relay function will be deteriorated. In this case, use an external thermal relay.
- A special motor cannot be protected by the electronic thermal relay function. Use an external thermal relay.
- Set **Pr.9** = "0" for vector-control-dedicated motors (SF-V5RU) because they are equipped with thermal protectors.
- Motor over temperature sensing is not provided by the drive.

Appendix 4 Instructions for EAC

The product certified in compliance with the Eurasian Conformity has the EAC marking.

Note: EAC marking
In 2010, three countries (Russia, Belarus, and Kazakhstan) established a Customs Union for the purposes of revitalizing the economy by forming a large economic bloc by abolishing or reducing tariffs and unifying regulatory procedures for the handling of articles.
Products to be distributed over these three countries of the Customs Union must comply with the Customs Union Technical Regulations (CU-TR), and the EAC marking must be affixed to the products.

For information on the country of origin, manufacture year and month, and authorized sales representative (importer) in the CU area of this product, refer to the following:

- Country of origin indication
  Check the rating plate of the product. (Refer to **page 8**.)
  Example: MADE IN JAPAN

- Manufactured year and month
  Check the SERIAL number indicated on the rating plate of the product. (Refer to **page 8**.)

- Authorized sales representative (importer) in the CU area
  The authorized sales representative (importer) in the CU area is shown below.
  Name: Mitsubishi Electric (Russia) LLC
  Address: 52, bld 1 Kosmodamianskaya Nab 115054, Moscow, Russia
  Phone: +7 (495) 721-2070
  Fax: +7 (495) 721-2071

Appendix 5 Restricted Use of Hazardous Substances in Electronic and Electrical Products

The mark of restricted use of hazardous substances in electronic and electrical products is applied to the product as follows based on the “Management Methods for the Restriction of the Use of Hazardous Substances in Electrical and Electronic Products” of the People's Republic of China.

电器电子产品有害物质限制使用标识要求

本产品中所含有的有害物质的名称、含量、含有部件如下表所示。

• 产品中所含有害物质的名称及含量

部件名称 *2	有害物质 *1					
	铅 (Pb)	汞 (Hg)	镉 (Cd)	六价铬 (Cr (VI))	多溴联苯 (PBB)	多溴二苯醚 (PBDE)
电路板组件 （包括印刷电路板及其构成的零部件，如电阻、电容、集成电路、连接器等）、电子部件	×	○	×	○	○	○
金属壳体、金属部件	×	○	○	○	○	○
树脂壳体、树脂部件	○	○	○	○	○	○
螺丝、电线	○	○	○	○	○	○

上表依据 SJ/T11364 的规定编制。
○：表示该有害物质在该部件所有均质材料中的含量均在 GB/T26572 规定的限量要求以下。
×：表示该有害物质在该部件的至少一种均质材料中的含量超出 GB/T26572 规定的限量要求。
*1 即使表中记载为 ×，根据产品型号，也可能会有有害物质的含量为限制值以下的情况。
*2 根据产品型号，一部分部件可能不包含在产品中。

Appendix 6 Referenced Standard (Requirement of Chinese standardized law)

This Product is designed and manufactured accordance with following Chinese standards.

Machinery safety : GB/T 16855.1
GB/T 12668.502
GB 28526
GB/T 12668.3
Electrical safety : GB/T 12668.501
EMC : GB/T 12668.3

WARRANTY

When using this product, make sure to understand the warranty described below.

1. Warranty period and coverage

We will repair any failure or defect (hereinafter referred to as "failure") in our FA equipment (hereinafter referred to as the "Product") arisen during warranty period at no charge due to causes for which we are responsible through the distributor from which you purchased the Product or our service provider. However, we will charge the actual cost of dispatching our engineer for an on-site repair work on request by customer in Japan or overseas countries. We are not responsible for any on-site readjustment and/or trial run that may be required after a defective unit are repaired or replaced.

[Term]

The term of warranty for Product is twelve months after your purchase or delivery of the Product to a place designated by you or eighteen months from the date of manufacture whichever comes first ("Warranty Period"). Warranty period for repaired Product cannot exceed beyond the original warranty period before any repair work.

[Limitations]

(1) You are requested to conduct an initial failure diagnosis by yourself, as a general rule. It can also be carried out by us or our service company upon your request and the actual cost will be charged.
However, it will not be charged if we are responsible for the cause of the failure.

(2) This limited warranty applies only when the condition, method, environment, etc. of use are in compliance with the terms and conditions and instructions that are set forth in the instruction manual and user manual for the Product and the caution label affixed to the Product.

(3) Even during the term of warranty, the repair cost will be charged on you in the following cases;
- a failure caused by your improper storing or handling, carelessness or negligence, etc., and a failure caused by your hardware or software problem
- a failure caused by any alteration, etc. to the Product made on your side without our approval
- a failure which may be regarded as avoidable, if your equipment in which the Product is incorporated is equipped with a safety device required by applicable laws and has any function or structure considered to be indispensable according to a common sense in the industry
- a failure which may be regarded as avoidable if consumable parts designated in the instruction manual, etc. are duly maintained and replaced
- any replacement of consumable parts (condenser, cooling fan, etc.)
- a failure caused by external factors such as inevitable accidents, including without limitation fire and abnormal fluctuation of voltage, and acts of God, including without limitation earthquake, lightning and natural disasters
- a failure generated by an unforeseeable cause with a scientific technology that was not available at the time of the shipment of the Product from our company
- any other failures which we are not responsible for or which you acknowledge we are not responsible for

2. Term of warranty after the stop of production

(1) We may accept the repair at charge for another seven (7) years after the production of the product is discontinued. The announcement of the stop of production for each model can be seen in our Sales and Service, etc.

(2) Please note that the Product (including its spare parts) cannot be ordered after its stop of production.

3. Service in overseas

Our regional FA Center in overseas countries will accept the repair work of the Product; however, the terms and conditions of the repair work may differ depending on each FA Center. Please ask your local FA center for details.

4. Exclusion of responsibility for compensation against loss of opportunity, secondary loss, etc.

Regardless of the gratis warranty term, Mitsubishi Electric shall not be liable for compensation to:

(1) Damages caused by any cause found not to be the responsibility of Mitsubishi Electric.

(2) Loss in opportunity, lost profits incurred to the user by Failures of Mitsubishi Electric products.

(3) Special damages and secondary damages whether foreseeable or not, compensation for accidents, and compensation for damages to products other than Mitsubishi Electric products.

(4) Replacement by the user, maintenance of on-site equipment, start-up test run and other tasks.

5. Change of Product specifications

Specifications listed in our catalogs, manuals or technical documents may be changed without notice.

6. Application and use of the Product

(1) For the use of our product, its applications should be those that may not result in a serious damage even if any failure or malfunction occurs in product, and a backup or fail-safe function should operate on an external system to product when any failure or malfunction occurs.

(2) Our product is designed and manufactured as a general purpose product for use at general industries.
Therefore, applications substantially influential on the public interest for such as atomic power plants and other power plants of electric power companies, and also which require a special quality assurance system, including applications for railway companies and government or public offices are not recommended, and we assume no responsibility for any failure caused by these applications when used.
In addition, applications which may be substantially influential to human lives or properties for such as airlines, medical treatments, railway service, incineration and fuel systems, man-operated material handling equipment, entertainment machines, safety machines, etc. are not recommended, and we assume no responsibility for any failure caused by these applications when used.
We will review the acceptability of the abovementioned applications, if you agree not to require a specific quality for a specific application. Please contact us for consultation.

◆About the enclosed CD-ROM

The enclosed CD-ROM contains PDF copies of the manuals related to this product.

◆Before using the enclosed CD-ROM

- The copyright and other rights of the enclosed CD-ROM all belong to Mitsubishi Electric Corporation.
- No part of the enclosed CD-ROM may be copied or reproduced without the permission of Mitsubishi Electric Corporation.
- Specifications of the enclosed CD-ROM are subject to change for modification without notice.
- We are not responsible for any damages and lost earnings, etc. from use of the enclosed CD-ROM.
- Trademarks

  Microsoft, Windows, and Internet Explorer are either registered trademarks or trademarks of Microsoft Corporation in the United States and/or other countries.

  Windows Vista is either registered trademarks or trademark of Microsoft Corporation in the United States and/or other countries.

  Adobe and Acrobat Reader are either registered trademarks or trademarks of Adobe Systems Incorporated in the United States and/or other countries.

  Intel and Pentium are trademarks of Intel Corporation in the United States and/or other countries.

  Any trade names and product names of companies herein are all trademarks or registered trademarks of those respective companies.
- Warranty

  We do not provide a warranty against defects in the enclosed CD-ROM and related documents.

NOTE

- This is a personal computer dedicated CD-ROM. Do not attempt to play it on ordinary audio devices. The loud volume may damage hearing and speakers.

◆System requirements for the enclosed CD-ROM

- The following system is required to read instruction manuals contained in the enclosed CD-ROM.

Item	Specifications
OS	Microsoft® Windows® 10, Windows® 8.1, Windows® 8, Windows® 7, Windows Vista®
CPU	Intel® Pentium® or better processor
Memory	128 MB of RAM
Hard disk	90 MB of available hard-disk space
CD-ROM drive	Double speed or more (more than quadruple speed is recommended)
Monitor	800×600 dots or more
Application	Adobe® Reader® 7.0 or higher Internet Explorer® 6.0 or higher

◆Operating method of the enclosed CD-ROM

- How to read instruction manuals

  Step 1. Start the personal computer and place the enclosed CD-ROM in the CD-ROM drive.

  Step 2. The main window will automatically open in the web browser.

  Step 3. Choose your language from a language menu.

  Step 4. Click the manual you want to read in the "INSTRUCTION MANUAL" list.

  Step 5. The PDF manual will open.

- Manual opening of the enclosed CD-ROM

  Step 1. Start the personal computer and place the enclosed CD-ROM in the CD-ROM drive.

  Step 2. Open the "index.html" file.

  Step 3. The main window will open in the web browser. Follow the previous steps from Step 3 to Step 5.

  - PDF data of the instruction manual are stored in "MANUAL" folder on the enclosed CD-ROM.

MEMO

REVISIONS

*The manual number is given on the bottom left of the back cover.

Revision Date	*Manual Number	Revision
Feb. 2014	IB(NA)-0600531ENG-A	First edition
Apr. 2014	IB(NA)-0600531ENG-B	Addition • FR-A846-00023(0.4K) to 00170(5.5K)
Oct. 2014	IB(NA)-0600531ENG-C	Addition • FR-A846-00620(22K) to 01160(45K)
Dec. 2014	IB(NA)-0600531ENG-D	Addition • FR-A846-01800(55K) to 03610(132K)
Oct. 2015	IB(NA)-0600531ENG-E	Addition • Compatibility with FR-A8TP and FR-A8APR
Jul. 2016	IB(NA)-0600531ENG-F	Modification • Safety stop function Addition • Instructions for EAC • Restricted Use of Hazardous Substances in Electronic and Electrical Products
Apr. 2019	IB(NA)-0600531ENG-G	Addition • Referenced Standard (Requirement of Chinese standardized law) • Removal and reinstallation precautions of the control circuit terminal block

FR-A800 Series
Instruction Manual Supplement

1 Instructions for compliance with the EU Directives

◆ EMC Directive

The standard is as follows.

- EMC Directive: 2014/30/EC
- Standard: EN 61800-3:2004+A1:2012 (Second environment / PDS Category C3)
  The FR-A806 is compliant with the following standard.
  EN 61800-3:2004+A1:2012 (First environment / PDS Category C2, Second environment / PDS Category C3[*1])
  *1 The applicable standard depends on the type of the built-in EMC filter.

◆ Motor overload protection

To use the electronic thermal function for motor overload protection, set a rated motor current in **Pr.9 Electronic thermal O/L relay**.

Operational characteristic of the electronic thermal relay function

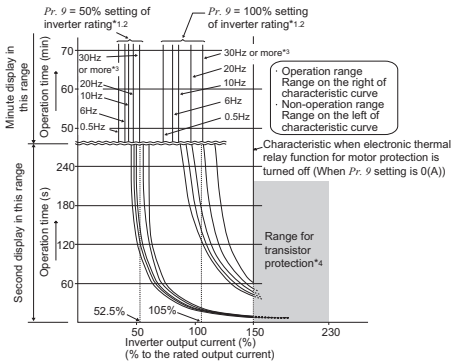

This function detects the overload of the motor, stops the operation of the inverter's output transistor, and stops the output. (The operation characteristic is shown on the left.)

- When using the Mitsubishi Electric constant-torque motor

1. Set **Pr.71** = "1, 13 to 16, 50, 53, or 54". (This provides a 100% continuous torque characteristic in the low-speed range.)

2. Set the rated motor current in **Pr.9**.

*1 When a value 50% of the inverter rated output current (current value) is set in **Pr.9**

*2 The % value denotes the percentage to the inverter rated output current. It is not the percentage to the rated motor current.

*3 When the electronic thermal relay function dedicated to the Mitsubishi Electric constant-torque motor is set, this characteristic curve applies to operation at 6 Hz or higher.

*4 Transistor protection is activated depending on the temperature of the heatsink. The protection may be activated even with less than 150% depending on the operating conditions.

NOTE

- The internal accumulated heat value of the electronic thermal O/L relay is reset to the initial value by the inverter's power reset or reset signal input. Avoid unnecessary reset and power-OFF.
- When multiple motors are driven with a single inverter or when a multi-pole motor or a special motor is driven, install an external thermal relay (OCR) between the inverter and motors. When setting an external thermal relay, note that the current indicated on the motor rating plate is affected by the line-to-line leakage current. (Refer to the Instruction Manual (Detailed).)
- The cooling effect of the motor drops during low-speed operation. Use a thermal protector or a motor with built-in thermistor.
- When the difference between the inverter and motor capacities is large and the set value is small, the protective characteristics of the electronic thermal relay function will be deteriorated. In such case, use an external thermal relay.
- A special motor cannot be protected by the electronic thermal relay function. Use an external thermal relay.
- Set **Pr.9** = "0" for Vector-control-dedicated motors (SF-V5RU) because they are equipped with built-in thermal protectors.
- Motor over temperature sensing is not provided by the drive.
- Electronic thermal memory retention function is not provided by the drive.

2 Negative output selection for monitoring (Pr.290)

Negative output is available for FR Configurator2 or the trace function.

Pr.290 setting	Connection port			
	Terminal AM	Operation panel	Communication option*1	FR Configurator2 etc.*2
0 (initial value)	—	—	—	—
1	Enabled	—	—	—
2	—	Enabled	—	—
3	Enabled	Enabled	—	—
4	—	—	Enabled	Enabled
5	Enabled	—	Enabled	Enabled
6	—	Enabled	Enabled	Enabled
7	Enabled	Enabled	Enabled	Enabled

—: Disabled (unsigned numbers only)

*1 The following communication does not support the negative output.
RS-485 communication (Mitsubishi inverter protocol, MODBUS RTU), SLMP communication, and HMS network option

*2 Under the condition that the high-speed sampling and the negative output are selected for FR Configurator2, the display range of the output frequency (Monitor No.1) is -300.00 Hz to 300.00 Hz. A value outside the range is clamped at -300.00 Hz or 300.00 Hz. Under the same condition, the display range of the running speed (Monitor No.6) is -30000 r/min to 30000 r/min. A value outside the range is clamped at -30000 r/min or 30000 r/min. During the trace sampling, the same display ranges are applied. A value outside the ranges is clamped.

- Select items to be displayed with minus signs using **Pr.1018 Monitor with sign selection**.

Monitor item	Pr.1018 setting		
	9999	0	1
Output frequency	—	○*1	○*1
Motor speed	—	○*1	○*1
Motor torque	○	○	○
Position command (lower)*4	○*2	○*2	○*3
Position command (upper)*4	○*2	○*2	○*3
Current position (lower)*4	○*2	○*2	○*3
Current position (upper)*4	○*2	○*2	○*3
Droop pulse (lower)*4	○*2	○*2	○*3
Droop pulse (upper)*4	○*2	○*2	○*3
Torque command	○	○	○
Torque current command	○	○	○
Torque monitor (power driving / regenerative driving polarity switching)	○	○	○
Motor temperature	○	○	○
PID deviation	○	○	○
Cumulative pulse	○	○	○
Cumulative pulse overflow times	○	○	○
Cumulative pulse (control terminal option)	○	○	○
Cumulative pulse overflow times (control terminal option)	○	○	○
Remote output 1	○	○	○
Remote output 2	○	○	○
Remote output 3	○	○	○
Remote output 4	○	○	○
PID manipulated amount	○	○	○
Second PID deviation	○	○	○
Second PID manipulated amount	○	○	○
Control circuit temperature	○	○	○

○: Displayed with minus signs, —: Displayed without minus signs (unsigned numbers only)

*1 Displayed without minus signs on the operation panel. Confirm the rotation direction with the [FWD] or [REV] indicator.
*2 Signed values are displayed only on the FR-DU08 (-9999 to 9999). Unsigned values (0 to 9999) are displayed on other devices.
*3 Full 32-bit data (-2147483648 to 2147483647) is displayed during monitoring via the communication option.
*4 Monitor the lower and upper digits at the same timing. Otherwise, the data may not be reliable.

NOTE

- When indication with negative numbers is enabled for the output via terminal AM (analog voltage output), the output is within the range of -10 to +10 VDC. Connect a meter suitable for the output.
- Parameter unit (FR-PU07) displays only unsigned numbers.

3 CS signal command source selection

The CS signal can be used via communication.

◆ Extended setting range of the automatic restart after instantaneous power failure selection

- In the Network operation mode, the command source of the CS signal can be selected according to **Pr.162 Automatic restart after instantaneous power failure selection** setting.

Pr.	Name	Initial value	Setting range	Description
162 A700	**Automatic restart after instantaneous power failure selection**	0	0, **1000**	Frequency search only performed at the first start
			1, **1001**	Reduced voltage start only at the first start (no frequency search)
			2, **1002**	Encoder detection frequency search
			3, **1003**	Frequency search only performed at the first start (reduced impact restart)
			10, **1010**	Frequency search at every start
			11, **1011**	Reduced voltage start at every start (no frequency search)
			12, **1012**	Encoder detection frequency search at every start
			13, **1013**	Frequency search at every start (reduced impact restart)

■ Automatic restart after instantaneous power failure selection (Pr.162)

Pr.162 Setting[*1]	Description	
▯▯▯0	Automatic restart after instantaneous power failure selection[*2]	
▯▯▯1		
▯▯▯2		
▯▯▯3		
▯▯0▯	Restart timing	Restart only at the first start
▯▯1▯		Restart at every start
0▯▯▯	CS signal command source selection under Network operation mode	Always External
1▯▯▯		NET (**Pr.338**=“0”) External (**Pr.338**=“1”)

*1 Zero of the most significant digit is not displayed.

*2 The setting value of **Pr.162** and restart operation under each control method are as follows.

Pr.162 Setting	V/F control, Advanced magnetic flux vector control		Real sensorless vector control	Vector control	PM sensorless vector control
	Without encoder	With encoder			
▯▯▯0	Frequency search	Frequency search	Frequency search (reduced impact restart)	Encoder detection frequency search	Frequency search for a PM motor
▯▯▯1	Reduced voltage start	Reduced voltage start			
▯▯▯2	Frequency search	Encoder detection frequency search			
▯▯▯3	Frequency search (reduced impact restart)	Frequency search (reduced impact restart)			

◆ Command interface/source for start command and frequency command during communication operation

The following table shows a command interface/source in the Network operation mode. A command via communication is enabled in addition to an external terminal to the CS signal (RS-485 terminals or communication option).

Command sources selection			Pr.338 Communication operation command source / Pr.339 Communication speed command source		0: NET			1: External (EXT)			Remarks
					0: NET	1: External (EXT)	2: External (EXT)	0: NET	1: External (EXT)	2: External (EXT)	
Selectable function	Pr.178 to Pr.189 setting	6	CS	Automatic restart after instantaneous power failure selection / flying start function	External / NET			External			External / NET is selected according to **Pr.162** setting. *1

*1 When **Pr.77** = "2", **Pr.162** setting can be changed during operation. The new setting is applied after stop. Until the inverter has stopped, the previous setting of the interface for the operation command and the speed command in the Network operation mode is valid.

◆ Precautions for electronic bypass sequence function

- The response time of the inverter to the signals depends on the command source, NET or External.
  After the communication with the inverter is established, the motor operation is performed according to the command via NET.
  The commercial power supply operation with the motor is performed when the MRS signal turns ON before the communication is established. It is recommended to turn the MRS signal ON after the communication is established.
  Example: the response time of the inverter to the signals in the Network operation mode (power-ON). The command source is External for the MRS signal and NET for the STF (STR) and CS signals.

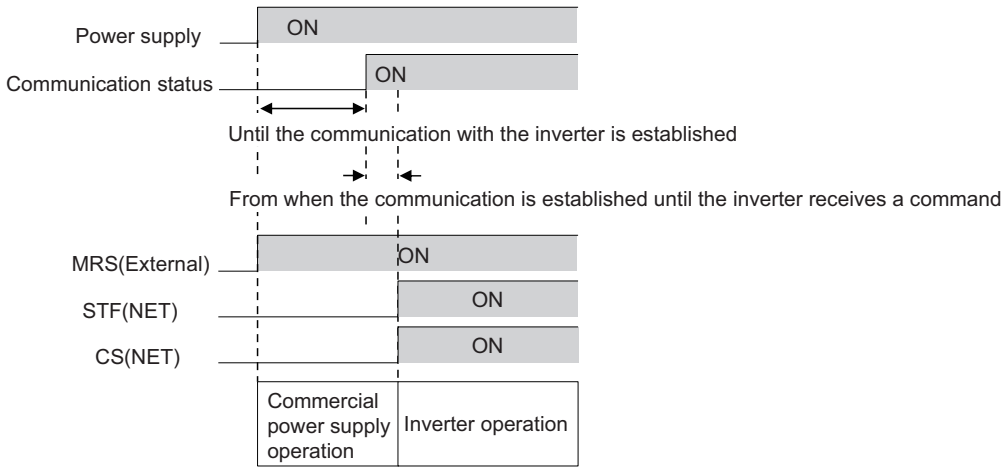

4 Position command source selection

The value of the current position 2 monitor can be retained when position control is switched to other control mode.

Pr.	Name	Initial value	Setting range	Description
419 **B000**	**Position command source selection**	0	0 to 2, 10, 100, 110, **200, 210, 300, 310,** 1110, **1310**	Parameters for the position command source, the home position data at servo-OFF, clearing of the current position 2 monitor value, the absolute position control.

Pr.419 Setting[*1]	Description	
□□□0	Position command selection	Simple position control by point tables (position command by setting parameters).
□□□1		Position command by the pulse train input to the FR-A8AL[*3]
□□□2		Simple pulse train position command by the pulse train input to the inverter
□□0□	The home position retention selection when the LX signal OFF (servo-OFF)	Not retained
□□1□		Retained
□0□□	Selecting clearing of the current position 2 monitor value[*2]	Not cleared when the home position return completed. Cleared under the control mode other than position control.
□1□□		Cleared when the home position return completed. Cleared under the control mode other than position control.
□2□□		Not cleared when the home position return completed. Not cleared under the control mode other than position control.
□3□□		Cleared when the home position return completed. Not cleared under the control mode other than position control.
0□□□	Absolute position control	Disabled
1□□□		Enabled (with the FR-A8APS installed)[*4]

*1 Zero of the most significant digit is not displayed.
*2 Timing to clear the current position 2 monitor value differs depending on the setting value.
*3 During position control under Vector control, if **Pr.419** = "1" while the FR-A8AL is not installed (or is disabled), the protective function (E.OPT) is activated.
*4 During position control under Vector control, if **Pr.419** = "1110" while the FR-A8APS is not installed (or is disabled), a protective function (E.OPT) is activated.

◆ Pulse monitor

- Position pulses are cleared according to the following conditions.

Clearing condition	Position command / current position / droop pulse			
	Pr.419 setting			
	0, 100, 200, 300	10, 110, 210, 310	1, 2	1110, 1310
Servo-OFF (LX-OFF) (output shutoff)	○	×	○	×
Clear signal input[*2]	○	○[*3]	○	×[*5]
Home position return completed	○[*1]	○[*1*4]	—[*6]	○[*1*4]
When position control is switched to other control mode	○	○	○	○
Clear signal input (When position control is switched to other control mode)	×	×	×	×

Clearing condition	Current position 2										
	Pr.419 setting										
	0	10	100	110	1, 2	1110	200	210	300	310	1310
Servo-OFF (LX-OFF) (output shutoff)	×	×	×	×	×	×	×	×	×	×	×
Clear signal input[*2]	○	○[*3]	○	○[*3]	○	×[*5]	○	○	○	○	×[*5]
Home position return completed	×	×	○	○	—[*6]	○	×	×	○	○	○
When position control is switched to other control mode	○	○	○	○	○	○	×[*7]	×[*7]	×[*7]	×[*7]	×[*7]
Clear signal input (When position control is switched to other control mode)	×	×	×	×	×	×	○[*7]	○[*7]	○[*7]	○[*7]	○[*7]

○: Cleared, ×: Not cleared

*1 The droop pulses are not cleared.

*2 The CLR/CLRN signal is input when a value other than "1" is set in **Pr.419**, and the signal is input through terminal CR of the FR-A8AL when **Pr.419** = "1".

*3 Pulses are cleared when a clear signal is input. (The home position information is not retained.)

*4 Pulses are cleared only when the home position return is completed. Once the pulses are cleared, they are not cleared even if the LX signal is turned ON.

*5 The data is cleared when absolute position control is disabled.

*6 The home position return is not available.

*7 The following shows the example of the clearing the value of the current position 2 monitor under the control mode other than the position control mode.

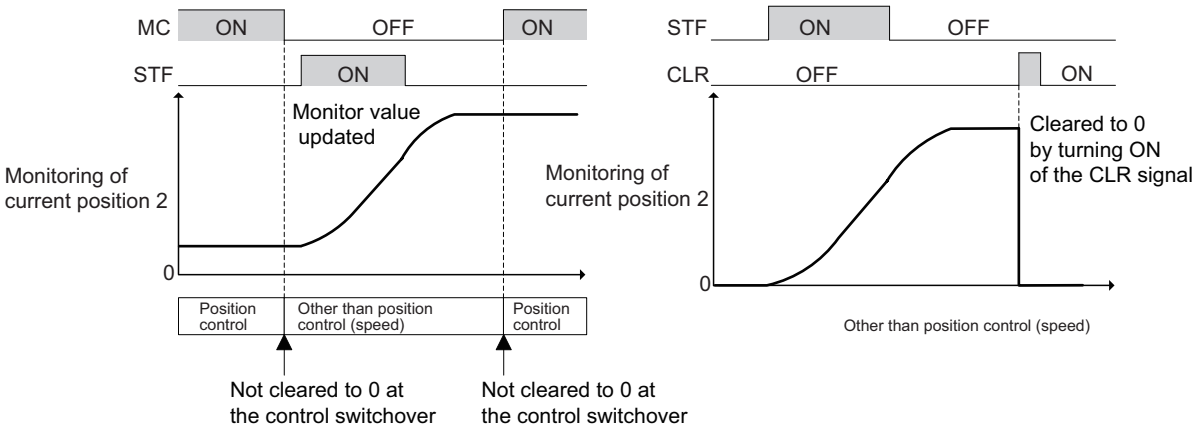

5 Ready bit status selection (Pr.349, N240)

- The status of Ready bit in communication data can be selected when a communication option (FR-A8ND, or FR-A8NF) is installed.

Setting			Description			
			Communication reset selection		Ready bit status selection	
Pr.349	N010	N240	NET operation mode	Other than NET operation mode	Main circuit: power-ON	Main circuit: power-OFF*1
0	0	0	Reset enabled	Reset enabled	Ready bit: ON	Ready bit: ON
1	1	0	Reset enabled	Reset disabled	Ready bit: ON	Ready bit: ON
100	0	1	Reset enabled	Reset enabled	Ready bit: ON	Ready bit: OFF
101	1	1	Reset enabled	Reset disabled	Ready bit: ON	Ready bit: OFF

*1 When 24 V external power is available for control circuit or power is input only to control circuit.

- FR-A8ND
  Class 0x29 instance 1

Attribute ID	Access	Name	Data type	Number of data bytes	Initial value	Range	Description	
9	Get	Ready	BOOL	1	1	0	Other than the below	
						1	**Pr.349** = "0 or 1" **N240** = "0"	During stop / during acceleration / during constant speed operation / during deceleration / during reverse rotation deceleration
							Pr.349 = "100 or 101" **N240** = "1"	During stop while the RY signal is ON / during acceleration / during constant speed operation / during deceleration / during reverse rotation deceleration

- FR-A8NF
  Inverter status monitor

Bit	Name	Description		
14	READY signal	Reset cancel	**Pr.349** = "0 or 1" **N240** = "0"	0: During an inverter reset / during startup after power-ON. 1: During normal operation
			Pr.349 = "100 or 101" **N240** = "1"	0: RY signal is OFF 1: RT signal is ON

FR-A800 Series
Instruction Manual Supplement

1 Support for CC-Link IE TSN

Using the plug-in option FR-A8NCG enables CC-Link IE TSN communication.
For the details, refer to the FR-A8NCG Instruction Manual.

2 Main circuit capacitor residual-life estimation function

Even when the power supply cannot be turned OFF, the remaining life of the main circuit capacitor can be estimated without stopping the operation. Note that the remaining life of the main circuit capacitor estimated by this function is theoretical, and should be used as a guideline only.

Pr.	Name	Initial value	Setting range	Description
255 **E700**	**Life alarm status display**	0	(0 to 15, **32 to 47**)*1	Displays whether or not the parts of the control circuit capacitor, main circuit capacitor, cooling fan, and inrush current limit circuit have reached the life alarm output level. Read-only.
506 **E705***2	**Display estimated main circuit capacitor residual life**	100%	(0 to 100%)	Displays the estimated residual life of the main circuit capacitor. Read-only.

*1 Valid values (read only) for separated converter type inverters are "0, 1, 4, and 5". The setting range (reading only) for IP55 compatible modes is "0 to 63".
*2 The setting is available only for standard models and IP55 compatible models.

◆ Display estimated main circuit capacitor residual life (Pr.506)

- The estimated residual life of the main circuit capacitor is displayed in **Pr.506**.
- The remaining life of the main circuit capacitor is calculated from the energization time and the inverter output power (100% = Start of service life). When the remaining life of the main circuit capacitor falls below 10%, bit 5 of **Pr.255 Life alarm status display** turns ON and a warning is output by the Y90 signal.

◆ Life alarm display and signal output (Y90 signal, Pr.255)

Point

- Power no longer needs to be turned OFF for the warning signal (Y90) to be output when using the main circuit residual-life estimation function.

- Whether or not the parts of the control circuit capacitor, main circuit capacitor, cooling fan, inrush current limit circuit or internal air circulation fans have reached the life alarm output level can be checked with **Pr.255 Life alarm status display** and the Life alarm (Y90) signal. (Internal air circulation fans are equipped with IP55 compatible models.)

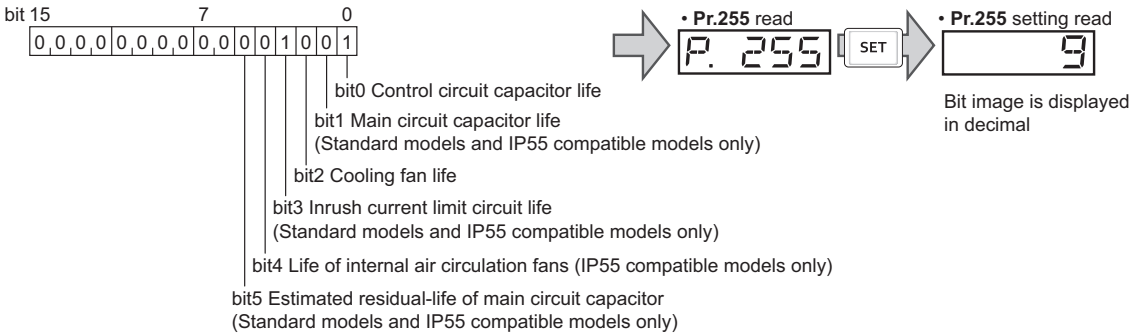

- The Life alarm (Y90) signal turns ON when either the control circuit capacitor life, main circuit capacitor life, cooling fan life, inrush current limit circuit life, internal air circulation fan life or the estimated residual life of the main circuit capacitor reaches the level set to output the life alarm.
- For the terminal used for the Y90 signal, set "90" (positive logic) or "190" (negative logic) in any of **Pr.190 to Pr.196 (Output terminal function selection)**.

NOTE

- When using an option (FR-A8AY, FR-A8AR, FR-A8NC, FR-A8NCE), the life alarm for the Control circuit capacitor life (Y86 signal), Main circuit capacitor life (Y87 signal), Cooling fan life (Y88 signal), Inrush current limit circuit life (Y89 signal), and the estimated residual-life of the Main circuit capacitor (Y248 signal) can be output individually.
- Changing the terminal assignment using **Pr.190 to Pr.196 (Output terminal function selection)** may affect the other functions. Set parameters after confirming the function of each terminal.

3 Stroke limit signals

- The Upper stroke limit (LSP) signal and the Lower stroke limit (LSN) signal can be used in any operation mode other than the SSCNET III(/H) operation mode.
- To assign the LSP and LSN signals to input terminals, set "88 (LSP)" and "89 (LSN)" in any two parameters from **Pr.178 to Pr.189 (Input terminal function selection)**.
- When the LSP and LSN signals are not assigned to any input terminal during position control by the FR-A8AL pulse train input or position control by pulse train input to the inverter (**Pr.419 Position command source selection** ="1 or 2"), the STF and STR signals are used as the Upper stroke limit and the Lower stroke limit signal.
- The rotation direction indicators on the LCD operation panel (FR-LU08) and the parameter unit (FR-PU07) differ depending on the ON/OFF state of the stroke limit signals as shown in the table below. Note that "---" is displayed regardless of the ON/OFF state of the stroke limit signals in the SSCNET III(/H) operation mode.

Upper stroke limit signal	Lower stroke limit signal	Operation panel indication
OFF	OFF	---
ON	OFF	STF
OFF	ON	STR
ON	ON	---

4 Reset selection after inverter faults are cleared (Pr.349, N241)

- When the communication option is specified for the command source in Network operation mode, it is possible to select whether the inverter is reset after the "Fault reset" command is executed. (Only when the HMS network option is installed.)

Setting				Description				
Pr.349	N010	N240	N241	Communication reset selection		Ready bit status selection		Reset selection after inverter faults are cleared
				NET operation mode	Other than NET operation mode	Main circuit: power-ON	Main circuit: power-OFF*1	Reset
0	0	0	0	Reset enabled	Reset enabled	Ready bit: ON	Ready bit: ON	Enabled
1	1	0	0	Reset enabled	Reset disabled	Ready bit: ON	Ready bit: ON	Enabled
100	0	1	0	Reset enabled	Reset enabled	Ready bit: ON	Ready bit: OFF	Enabled
101	1	1	0	Reset enabled	Reset disabled	Ready bit: ON	Ready bit: OFF	Enabled
1000	0	0	1	Reset enabled	Reset enabled	Ready bit: ON	Ready bit: ON	Disabled*2
1001	1	0	1	Reset enabled	Reset disabled	Ready bit: ON	Ready bit: ON	Disabled*2
1100	0	1	1	Reset enabled	Reset enabled	Ready bit: ON	Ready bit: OFF	Disabled*2
1101	1	1	1	Reset enabled	Reset disabled	Ready bit: ON	Ready bit: OFF	Disabled*2

*1 When 24 V external power is available for control circuit or power is input only to control circuit.
*2 Available when the HMS network option is installed.

FR-A800 Series
Instruction Manual Supplement

1 Direct multi-speed operation

When the RLF (RLR) signal is input, the operation is the same as the one when the STF (STR) signal and RL signal are input.

◆ Input terminal function assignment

- Use **Pr.178 to Pr.189** to set the functions of the input terminals.
- Refer to the following table and set the parameters.

Setting	Signal name	Function	Related parameter
128	RLF	Low-speed forward rotation command	**Pr.6**
129	RLR	Low-speed reverse rotation command	**Pr.6**

◆ Direct multi-speed setting

- While the RLF or RLR signal is input, the operation is according to **Pr.6 Multi-speed setting (low-speed)**. The rotation is forward while the RLF signal is input, and the rotation is reverse while the RLR signal is input.

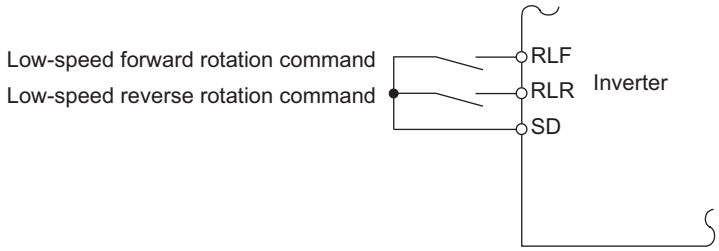

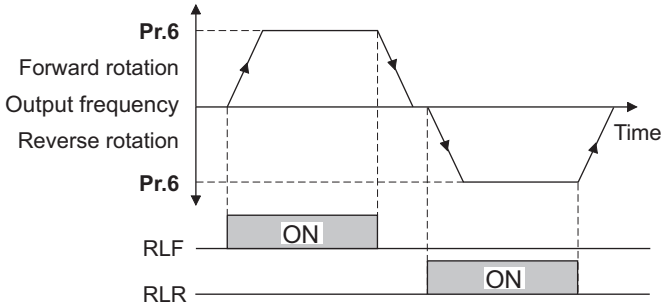

NOTE

- The **Pr.6** setting should be equal to or higher than the **Pr.13 Starting frequency** setting.
- To assign the RLF and RLR signals to input terminals, set "128 (RLF)" and "129 (RLR)" in any two parameters from **Pr.178 to Pr.189 (Input terminal function selection)**.
- The direct multi-speed operation is enabled only when the inverter operates in External operation mode.
- When the RLR or STR signal is input while the RLF signal is input, the motor is decelerated to stop.
- When the RLF or STF signal is input while the RLR signal is input, the motor is decelerated to stop.
- When **Pr.59 Remote function selection** ≠ "0", the RLF signal is used as the STF signal, and the RLR signal is used as the STR signal.
- When the stop-on-contact function is enabled, the RLF signal is used as the STF signal, and the RLR signal is used as the STR signal.
- When the RLF or RLR signal is turned ON to enable the direct multi-speed operation, the setting of **Pr.250 Stop selection** and the STP (STOP) signal are disabled.

2 Vector control for PM motor with encoder supported

When the FR-A8AL or FR-A8TP is installed, the PM motor with an encoder, as well as the induction motor with an encoder, can be driven under vector control. (For the setting of vector control for an induction motor, refer to the Instruction Manual (Detailed) of the inverter).

◆ Control method

Control method	IM	PM
V/F control (orientation control, encoder feedback control)	○	×
Advanced magnetic flux vector control (orientation control, encoder feedback control)	○	×
Vector control	○	○

○: Supported, ×: Not supported

◆ Setting procedure of vector control for motor with encoder

Follow the following procedure to change the setting for the vector control for the motor with an encoder.

Set the applied encoder. **(Pr.359 (Pr.852), Pr.369 (Pr.851))**

Set the following parameters according to the encoder to be used: **Pr.359 Encoder rotation direction** and **Pr.369 Number of encoder pulses** when the FR-A8AL is installed, and **Pr.852 Control terminal option-Encoder rotation direction** and **Pr.851 Control terminal option-Number of encoder pulses** when the FR-A8TP is installed.

Set the motor. **(Pr.9, Pr.71, Pr.80, Pr.81, Pr.83, Pr.84)**

Set **Pr.71 Applied motor**, **Pr.9 Rated motor current**, **Pr.80 Motor capacity**, **Pr.81 Number of motor poles**, **Pr.83 Rated motor voltage,** and **Pr.84 Rated motor frequency** according to the motor specifications. (Setting "9999 (initial value)" in **Pr.80** or **Pr.81** selects V/F control.)

Set **Pr.702**, **Pr.706**, **Pr.707**, **Pr.724**, or **Pr.725** as required for the PM motor.

Select vector control (other than position control). (Refer to page 3.)

Perform offline auto tuning for induction motors, or perform offline auto tuning and the encoder position tuning for PM motors. **(Pr.96)** (Refer to page 3.)

Set **Pr.96**, and perform tuning.

Induction motor

PM motor

Configure the initial parameter setting for the applied motor using **Pr.998**.

When the setting for the PM motor is selected in **Pr.998 PM parameter initialization**, the vector control for the motor with an encoder is selected.

"8009": Parameter (rotations per minute) settings for an IPM motor other than MM-CF

"8109": Parameter (frequency) settings for an IPM motor other than MM-CF

"9009": Parameter (rotations per minute) settings for an SPM motor

"9109": Parameter (frequency) settings for an SPM motor

Test operation

Under position control

- Set **Pr.800** again. (Refer to page 3.)

NOTE

- For PM motors, after performing offline auto tuning and encoder position tuning, first perform PM parameter initialization. If parameter initialization is performed after setting other parameters, some of those parameters will be initialized too. (For the parameters to be initialized, refer to the Instruction Manual (Detailed) of the inverter.)

◆ Vector control for PM motor with encoder

Pr.80 (Pr.453), Pr.81 (Pr.454)	Pr.71 (Pr.450)	Pr.800 setting*1	Pr.451 setting*1	Control method	Control mode	Remarks
Other than 9999	IPM/SPM motor (other than MM-CF)	0, 100*2		Vector control*4	Speed control	—
		3, 103			Position control	—
		4, 104*3			Speed control/position control switchover	MC signal: ON Position control MC signal: OFF Speed control
		6, 106			Torque control by variable-current limiter control	—
		9, 109	—	PM sensorless vector control test operation		
		20 (initial value), 110*5	20, 110*5	PM sensorless vector control	Speed control	—
		—	9999 (initial value)	The setting value of **Pr.800** is used for the second motor. (PM sensorless vector control (speed control) when **Pr.800** = "9 or 109")		
9999*6	—	—		—		

*1 The setting values of 100 and above are used when the fast-response operation is selected.
*2 The operation for the setting of "0 or 100" is performed when "1, 2, 101, or 102" is set.
*3 The operation for the setting of "4 or 104" is performed when "5 or 105" is set.
*4 Speed control under PM sensorless vector control is applied if an option for vector control for PM motor is not installed.
*5 The operation for the setting of "20 or 110" is performed when "10 to 14, or 111 to 114" is set.
*6 When a PM motor is used, set **Pr.80** and **Pr.81** according to the motor. Setting "9999" disrupts proper operation.

◆ Offline auto tuning Vector

Offline auto tuning enables the optimal operation of a motor with encoder.

Pr.	Name	Initial value	Setting range	Description	
				PM motor	Induction motor
96 **C110**	**Auto tuning setting/status**	0	0	Offline auto tuning disabled.	
			1	Offline auto tuning enabled (without the motor rotating).	
			11	Offline auto tuning enabled only for motor constant R1 (without the motor rotating).	
			101	Encoder position tuning and offline auto tuning enabled (with the motor rotating slightly).	Offline auto tuning enabled (with the motor rotating).
463 **C210**	**Second motor auto tuning setting/ status**	0	0, 1, 11, 101	Setting of offline auto tuning for the second motor (refer to **Pr.96** for the setting description.)	

Point

- Refer to the Instruction Manual (Detailed) of the inverter to perform offline auto tuning.
- This section explains the specific information of the motor with an encoder.

Parameters to be overwritten with the tuning result data after tuning of PM motor

Pr.		Name	Tuning according to Pr.96 (Pr.463) setting			Description
			101	1	11	
90 (458)		Motor constant (R1)	○	○	○	Resistance per phase
92 (460)		Motor constant (L1)/d-axis inductance (Ld)	○	○	—	d-axis inductance
93 (461)		Motor constant (L2)/q-axis inductance (Lq)	○	○	—	q-axis inductance
711 (739)		Motor Ld decay ratio	○	○	—	d-axis inductance decay ratio
712 (740)		Motor Lq decay ratio	○	○	—	q-axis inductance decay ratio
859 (860)		Torque current/Rated PM motor current	○	○	—	
96 (463)		Auto tuning setting/status	○	○	○	
373*1	871*2	Encoder position tuning setting/status	○	—	—	Encoder position tuning performing status
1105*1	887*2	Encoder magnetic pole position offset	○	—	—	Turning data of encoder position tuning

○: Tuned, —: Not tuned

*1 The setting can be changed only when the FR-A8AL is installed.
*2 The setting can be changed only when the FR-A8TP is installed.

NOTE

- If the offline auto tuning is started before the encoder position tuning for a PM motor is finished (**Pr.1105 (Pr.887)** = "65535"), the protective function (E.MP) is activated.

◆ Encoder position tuning Vector

Encoder position tuning is required when a PM motor with an encoder is driven. The measured offset value between the motor home magnetic pole position and the encoder home position is stored. Only encoder position tuning can be performed when offline auto tuning is not required, such as when the parameters for motor constant are set manually, or when offline auto tuning is already performed.

Pr.		Name	Initial value	Setting range	Description
373 C142*1	871 C243*2	**Encoder position tuning setting/status**	0	0	Encoder position tuning disabled.
				1	Encoder position tuning enabled.
1105 C143*1	887 C244*2	**Encoder magnetic pole position offset**	65535	0 to 16383	Encoder position tuning data set.
				65535	No encoder position tuning data.

*1 The setting can be changed only when the FR-A8AL is installed.
*2 The setting can be changed only when the FR-A8TP is installed.

Before performing encoder position tuning

- Check that an option for vector control for PM motor, a motor, and an encoder are properly connected.
- Check that a motor (single, stop status) is connected. (Check that the motor is not rotated by an external force during tuning.)
- Check that the mechanical brake is released.
- Check that the vector control (speed control) for the PM motor with an encoder is selected (refer to page 3).

NOTE

- Encoder position tuning is required when a PM motor is used. (It is disabled when an induction motor is used.)
- When auto tuning is performed while **Pr.96** = "101", offline auto tuning and encoder position tuning can be performed at the same time (refer to page 3).

Setting

- To perform tuning, set **Pr.373 (Pr.871)** = "1".

Performing tuning

Point

- Before tuning, check the monitor display of the PU if the inverter is in the state ready for tuning. If the start command is turned ON though the inverter is not ready, the motor can start running.

- In the PU operation mode, press FWD / REV on the operation panel.
  In the external operation mode, turn ON the start command (STF signal or STR signal). Tuning will start.

NOTE

- The motor shaft rotates up to 2 times during tuning.

- The displays/indicator on the operation panel (FR-DU08), the parameter unit (FR-PU07), and the LCD operation panel (FR-LU08) will change as shown below.

Status	Parameter unit (FR-PU07) display	Operation panel (FR-DU08) display/ indicator	LCD operation panel (FR-LU08) display
Setting	READ:List TUNE 1 --- STOP PU	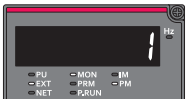	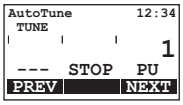
During tuning	TUNE 2 STF FWD PU	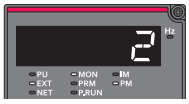	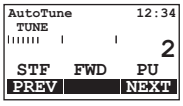
Normal completion	TUNE 3 COMPLETION STF STOP PU	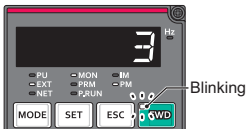	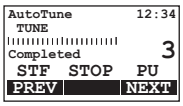

- When encoder position tuning ends, press STOP RESET on the operation panel during PU operation. In the external operation mode, turn OFF the start signal (STF signal or STR signal).
  This operation resets encoder position tuning, and the PU's monitor display returns to the normal indication. (Without this operation, next operation cannot be started.)

NOTE

- The encoder position tuning data is stored in **Pr.1105 (Pr.887)** until encoder position tuning is performed again. However, performing all parameter clear resets the tuning data.

- If encoder position tuning has ended in error (see the table below), tuning data has not been set. Perform an inverter reset and restart tuning.

Pr.373 (Pr.871) setting	Error cause	Corrective actions
8	Forced end	Set **Pr.373 (Pr.871)** = "1" and try tuning again.
9	Inverter protective function operation	Identify and remove the cause of the protective function activation, and make the setting again.
93	The motor or the encoder is not connected.	Check the wiring of the motor and the encoder, the brake opening, and make the setting again.

- When tuning is ended forcibly by pressing STOP RESET or turning OFF the start signal (STF or STR) during tuning, tuning does not end properly. (The tuning data have not been set.)
  Perform an inverter reset and restart tuning.
- When the protective function (Encoder phase fault (E.EP)) is activated during tuning, check the wiring of the motor and the encoder, **Pr.359 (Pr.852)** setting, and then perform tuning again.
- When tuning ends properly, the counter value of the offset between the motor home magnetic pole position and the encoder home position is written in **Pr.1105 (Pr.887)**.

3 Polarity of frequency command under dancer control

The inverter can be operated even when the polarity of the frequency command is negative under dancer control.

Pr.	Name	Initial value	Setting range	Description
73 **T000**	**Analog input selection**	1	0 to 7	The polarity reversible operation is disabled when the PID manipulated amount is added to the main speed command.
			10 to 17	The polarity reversible operation is enabled when the PID manipulated amount is added to the main speed command.

- Setting "10 to 17" in **Pr.73 Analog input selection** enables the polarity reversible operation of the main speed command to which PID manipulated amount added. (Polarity reversible operation of the main speed command without addition is not possible.)
- When the polarity reversible operation is enabled, the integral term cannot be limited by the maximum and minimum frequency when **Pr.1015 Integral stop selection at limited frequency** = "0 or 10".

4 Checking of current input on analog input terminal

A terminal for current input check can be selected.

Pr.	Name	Initial value	Setting range	Description
573 **T052**	**4 mA input check selection**	9999	1, **11**, **21**	Operation continues with output frequency before the current input loss.
			2, **12**, **22**	4 mA input fault (E.LCI) is activated when the current input loss is detected.
			3, **13**, **23**	The inverter output decelerates the motor to a stop when the current input loss is detected. After the motor is stopped, 4 mA input fault (E.LCI) is activated.
			4, **14**, **24**	Operation continues at the frequency set in **Pr.777**.
			9999	No current input check.

◆ Selection terminal for current input check (Pr.573)

- Use **Pr.573** to select which terminal's current input is checked.

Pr.573 setting	Terminal to be checked
1 to 4	Terminals 2 and 4
11 to 14	Terminals 4
21 to 24	Terminals 2

5 Input terminal status monitor

The input states of terminals S1 and S2 can be monitored.

◆ Monitor item list (Pr.52, Pr.774 to Pr.776, Pr.992)

- Use **Pr.52, Pr.774 to Pr.776,** or **Pr.992** to select the item to monitor on the operation panel or the parameter unit.
- Refer to the following table to find the setting value for each monitoring. The value in the Pr. setting column is set in each of the parameters for monitoring (**Pr.52, Pr.774 to Pr.776,** and **Pr.992**) to determine the monitor item. The value in the RS-485 column is used for the RS-485 communication special monitor selection. The value in the MODBUS RTU column is used for the MODBUS RTU real time monitor.

Monitor item	Increment and unit	Pr. setting	RS-485	MODBUS RTU	Description
Input terminal status	—	55*2	H0F*1	40215*1	The ON/OFF state of the input terminals on the inverter is displayed. (Refer to page 7 for details of indication on the DU.)

*1 The details of bits for the input terminal status are as follows. (1: ON state, 0: OFF state of a terminal on the inverter. "—" denotes an indefinite (null) value.)

b15															b0
S1	S2	-	-	CS	RES	STP (STOP)	MRS	JOG	RH	RM	RL	RT	AU	STR	STF

*2 Parameter setting is not available for setting the item as the main monitor item on the LCD operation panel (FR-LU08) or the parameter unit (FR-PU07). Use the monitor function of the FR-LU08 or the FR-PU07 for setting.

◆ Monitoring I/O terminals on the operation panel (FR-DU08) (Pr.52, Pr.774 to Pr.776, Pr.992)

- When **Pr.52 (Pr.774 to Pr.776, Pr.992)** = "55", the I/O terminal state can be monitored on the operation panel (FR-DU08).
- When a terminal is ON, the corresponding LED segment is ON. The center LED segments are always ON.

Pr.52, Pr.774 to Pr.776, Pr.992 setting	Monitor item	Monitor description
55	I/O terminal status	Displays the I/O terminal ON/OFF state of the inverter.

- On the I/O terminal monitor, the upper LEDs indicate the input terminal status, and the lower LEDs indicate the output terminal status.

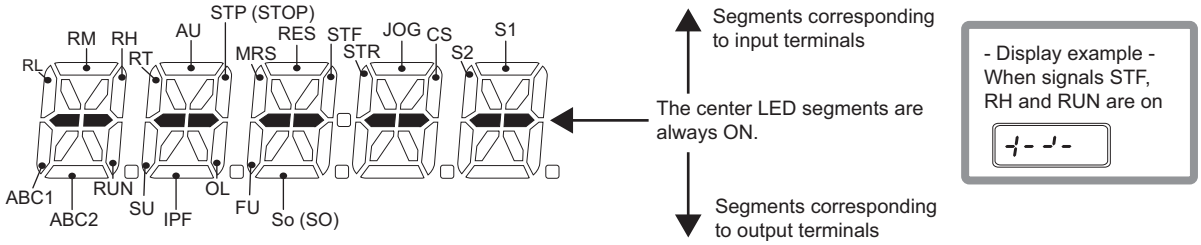

6 Main circuit capacitor life measuring

The measurement of the main circuit capacitor life can start whenever the power supply is turned OFF without setting the parameter every time.

Pr.	Name	Initial value	Setting range	Description
259 **E704***1	**Main circuit capacitor life measuring**	0	0	No measurement
			1 (2, 3, 8, 9)	Setting "1" and turning the power supply OFF starts the measurement of the main circuit capacitor life. (Only once) If the setting value of **Pr.259** becomes "3" after turning the power supply ON again, it means that the measurement is completed. The deterioration degree is read to **Pr.258**.
			11 (12, 13, 18, 19)	When "11" is set, turning OFF the power supply starts the measurement of the main circuit capacitor life. If the setting value of **Pr.259** becomes "13" after turning the power supply ON again, it means that the measurement is completed. The deterioration degree is read to **Pr.258**.

*1 The setting is available only for standard models and IP55 compatible models.

◆ Life display of the main circuit capacitor (Pr.258, Pr.259) (Standard models and IP55 compatible models)

Point

- For accurate life measurement of the main circuit capacitor, wait three hours or longer after turning OFF. The temperature left in the main circuit capacitor affects measurement.

- The deterioration degree of the main circuit capacitor is displayed in **Pr.258**.
- With the main circuit capacitor capacity at factory shipment as 100%, the capacitor life is displayed in **Pr.258** every time measurement is made. When the measured value falls to 85% or lower, bit 1 of **Pr.255** is turned ON (set to 1) and the Y90 signal is also output as an alert.
- Measure the capacitor capacity according to the following procedure and check the deterioration degree of the capacitor capacity.

1. Check that the motor is connected and at a stop.

2. Set "1, 11" (measuring start) in **Pr.259**.

3. Switch the power OFF. The inverter applies DC voltage to the motor to measure the capacitor capacity while the inverter is OFF.

4. After confirming that the power lamp is OFF, turn ON the power again.

5. Check that "3, 13" (measurement complete) is set in **Pr.259**, read **Pr.258**, and check the deterioration degree of the main circuit capacitor.

Pr.259	Description	Remarks
0	No measurement	Initial value
1, 11	Start measurement	Measurement starts when the power supply is switched OFF. (Only once when **Pr.259** = "1") When **Pr.259** = "11", the measurement starts every time the power supply is turned OFF.
2, 12	During measurement	Only displayed and cannot be set. (When "11" is set in **Pr.259**, "12, 13, 18, or 19" is displayed.)
3, 13	Measurement complete	
8, 18	Forced end	
9, 19	Measurement error	

NOTE

- When the main circuit capacitor life is measured under the following conditions, "forced end" (**Pr.259** = "8, 18"), or "measurement error" (**Pr.259** = "9, 19") may occur, or the status may remain in "measurement start" (**Pr.259** = "1, 11"). To perform measurement, first eliminate the following conditions. Under the following conditions, even if "measurement complete" (**Pr.259** = "3, 13") is reached, measurement cannot be performed correctly.
  - FR-HC2, FR-CV, MT-RC, or a sine wave filter (MT-BSL/BSC) is connected.
  - Terminals R1/L11, S1/L21 or DC power supply is connected to terminals P/+ and N/-.
  - The power supply is switched ON during measurement.
  - The motor is not connected to the inverter.
  - The motor is running (coasting).
  - The motor capacity is smaller than the inverter capacity by two ranks or more.
  - The inverter output is shut off or a fault occurred while the power was OFF.
  - The inverter output is shut off with the MRS signal.
  - The start command is given while measuring.
  - The applied motor setting is incorrect.
- Operation environment: Surrounding air temperature (annual average of 40°C (free from corrosive gas, flammable gas, oil mist, dust and dirt)).
  Output current: 80% of the inverter rating
- Since repeated inrush currents at power ON will shorten the life of the converter circuit, frequent starts and stops of the magnetic contactor must be avoided.

⚠WARNING

- When measuring the main circuit capacitor capacity (**Pr.259** = "1, 11"), the DC voltage is applied to the motor for about 1 second at power OFF. Never touch the motor terminal, etc. right after powering OFF to prevent an electric shock.

7 Load characteristics fault detection

This section describes how to set the load characteristics reference for the existing load characteristics fault detection function. The following shows the procedure to set the load characteristics reference manually.

Pr.	Name	Initial value	Setting range	Description
1481 H521	**Load characteristics load reference 1**	9999	0 to 400%	Set the reference value of normal load characteristics. 8888: The present load status is written as reference status. 9999: The load reference is invalid.
1482 H522	**Load characteristics load reference 2**	9999		
1483 H523	**Load characteristics load reference 3**	9999		
1484 H524	**Load characteristics load reference 4**	9999		
1485 H525	**Load characteristics load reference 5**	9999		

◆ Setting the load characteristics reference manually (Pr.1481 to Pr.1485)

- Set **Pr.1480 Load characteristics measurement mode** = "0" (initial value).
- Set **Pr.1486** and **Pr.1487** to specify the frequency band for the measurement, and calculate the frequency as the load characteristics reference (f2 to f4) using the following table.
- Start the inverter operation, and set **Pr.1481** = "8888" during operation at the frequency of the load characteristics reference 1 (f1). The load status at that point is set in **Pr.1481** (only when the set frequency is within ±2 Hz of the frequency of the measurement point, and the SU signal is ON).
- Set load references in **Pr.1482 to Pr.1485** in the same way as **Pr.1481**.

Reference	Frequency	Load reference
Load characteristics reference 1	f1: Load characteristics minimum frequency (**Pr.1487**)	**Pr.1481**
Load characteristics reference 2	f2 = (f5-f1)/4+f1	**Pr.1482**
Load characteristics reference 3	f3 = (f5-f1)/2+f1	**Pr.1483**
Load characteristics reference 4	f4 = (f5-f1)×3/4+f1	**Pr.1484**
Load characteristics reference 5	f5: Load characteristics maximum frequency (**Pr.1486**)	**Pr.1485**

NOTE

- When inputting values directly in **Pr.1481 to Pr.1485** under V/F control or Advanced magnetic flux vector control, input the load meter monitored values at the frequency of each load characteristics reference.
- When inputting values directly in **Pr.1481 to Pr.1485** under Real sensorless vector control, Vector control, or PM sensorless vector control, input the load meter monitored values at the frequency of each load characteristics reference.

8 PLC function

This section describes the CC-Link I/O specifications for the PLC function. For details, refer to the PLC function programming manual.

- The signal name of the PLC function device No. Y34 differs depending on the setting of **Pr.192 IPF terminal function selection** as follows.

Pr.192 setting	Signal name
9999	Instantaneous power failure (Terminal IPF function)
Other than 9999	Overload alarm (Terminal OL function)

- The signal name of the PLC function device No. Y35 differs depending on the setting of **Pr.193 OL terminal function selection** as follows.

Pr.193 setting	Signal name
9999	Overload alarm (Terminal OL function)
Other than 9999	Instantaneous power failure (Terminal IPF function)

MITSUBISHI ELECTRIC CORPORATION
HEAD OFFICE: TOKYO BUILDING 2-7-3, MARUNOUCHI, CHIYODA-KU, TOKYO 100-8310, JAPAN

MODEL	FR-A806 INSTRUCTION MANUAL (HARDWARE)
MODEL CODE	1A2-P56

IB(NA)-0600531ENG-G(1904)MEE Printed in Japan

Specifications subject to change without notice.