MITSUBISHI ELECTRIC

Programmable Controller

MELSEC iQ-F series

MELSEC iQ-F
FX5 User's Manual (ASLINK)

Powered by Anywire

This product is jointly developed and manufactured by Mitsubishi Electric and Anywire Corporation.

*Note that the warranty on this product differs from that on other programmable controller products.
(Refer to "WARRANTY" in this manual.)

AnyWireASLINK

COPYRIGHT

This document is protected by the law of copyright, whereby all rights established therein remain with the company Mitsubishi Electric Corporation. Reproduction of this document or parts of this document is only permissible within the limits of the legal determination of Copyright Law. Alteration or abridgement of the document is not permitted without the explicit written approval of the company Mitsubishi Electric Corporation.

PRECAUTIONS REGARDING WARRANTY AND SPECIFICATIONS

The FX5-ASL-M is jointly developed and manufactured by Mitsubishi Electric and Anywire Corporation. Note that there are differences in warranty.

- Warranty

Item	FX5-ASL-M	Other programmable controller products (e.g. MELSEC iQ-F series)
Repair term after discontinuation of production	1 year	7 years

- Application of the EMC Directive

Item	FX5-ASL-M	Other programmable controller products (e.g. MELSEC iQ-F series)
Applicable EMC standard	EN61131-2	EN61131-2

- Application of the UL/cUL standards

Item	FX5-ASL-ML	Other programmable controller products (e.g. MELSEC iQ-F series)
Applicable UL standard/cUL standard	UL508	UL508

SAFETY PRECAUTIONS

(Read these precautions before use.)

Before using this product, please read this manual and the relevant manuals introduced in this manual carefully and pay full attention to safety in order to handle the product correctly.

This manual classifies the safety precautions into two categories: [⚠ WARNING] and [⚠ CAUTION].

⚠ **WARNING**	Indicates that incorrect handling may cause hazardous conditions, resulting in death or severe injury.
⚠ **CAUTION**	Indicates that incorrect handling may cause hazardous conditions, resulting in minor or moderate injury or property damage.

Depending on the circumstances, procedures indicated by [⚠ CAUTION] may also cause severe injury.

It is important to follow all precautions for personal safety.

Store this manual in a safe place so that it can be read whenever necessary. Always forward it to the end user.

[DESIGN PRECAUTIONS]

⚠ WARNING

- An AnyWireASLINK system has no control function for ensuring safety.
- Make sure to set up the following safety circuits outside the PLC to ensure safe system operation even during external power supply problems or PLC failure. Otherwise, malfunctions may cause serious accidents.
  - Most importantly, set up the following: an emergency stop circuit, a protection circuit, an interlock circuit for opposite movements (such as normal vs. reverse rotation), and an interlock circuit to prevent damage (to the equipment at the upper and lower positioning limits).
  - Note that when the CPU module detects an error, such as a watchdog timer error, during self-diagnosis, all outputs are turned off. Also, when an error that cannot be detected by the CPU module occurs in an input/output control block, output control may be disabled. External circuits and mechanisms should be designed to ensure safe machinery operation in such a case.
- Construct an interlock circuit in the program so that the whole system always operates on the safe side before executing the control (for data change) of the PLC in operation.
  Read the manual thoroughly and ensure complete safety before executing other controls (for program change, parameter change, forcible output and operation status change) of the PLC in operation. Otherwise, the machine may be damaged and accidents may occur due to erroneous operations.
- Especially, when a remote programmable controller is controlled by an external device, immediate action cannot be taken if a problem occurs in the programmable controller due to a communication failure. To prevent this, configure an interlock circuit in the program, and determine corrective actions to be taken between the external device and CPU module in case of a communication failure.

[DESIGN PRECAUTIONS]

⚠ CAUTION

- Configure safety circuits, such as an emergency stop circuit and interlock circuit, external to the AnyWireASLINK system.
- Install module so that excessive force will not be applied to the terminal blocks.
  Failure to do so may result in wire damage/breakage or PLC failure.
- Simultaneously turn on and off the power supplies of the CPU module and extension modules.

[INSTALLATION PRECAUTIONS]

⚠WARNING

- Make sure to cut off all phases of the power supply externally before attempting installation or wiring work. Failure to do so may cause electric shock or damage to the product.
- Use the product within the generic environment specifications described in the User's Manual (Hardware) of the CPU module used.
  Never use the product in areas with excessive dust, oily smoke, conductive dusts, corrosive gas (salt air, Cl_2, H_2S, SO_2 or NO_2), flammable gas, vibration or impacts, or expose it to high temperature, condensation, or rain and wind.
  If the product is used in such conditions, electric shock, fire, malfunctions, deterioration or damage may occur.

[INSTALLATION PRECAUTIONS]

⚠CAUTION

- Do not touch the conductive parts of the product directly. Doing so may cause device failures or malfunctions.
- When drilling screw holes or wiring, make sure that cutting and wiring debris do not enter the ventilation slits of the PLC. Failure to do so may cause fire, equipment failures or malfunctions.
- For the product supplied together with a dust proof sheet, the sheet should be affixed to the ventilation slits before the installation and wiring work to prevent foreign objects such as cutting and wiring debris.
  However, when the installation work is completed, make sure to remove the sheet to provide adequate ventilation. Failure to do so may cause fire, equipment failures or malfunctions.
- Install the product on a flat surface. If the mounting surface is rough, undue force will be applied to the PC board, thereby causing nonconformities.
- Install the product securely using a DIN rail or mounting screws.
- Work carefully when using a screwdriver such as installation of the product. Failure to do so may cause damage to the product or accidents.
- Connect the extension cables, peripheral device cables, input/output cables and battery connecting cable securely to their designated connectors. Loose connections may cause malfunctions.
- Turn off the power to the PLC before attaching or detaching the following devices. Failure to do so may cause device failures or malfunctions.
  - Peripheral devices, expansion board, expansion adapter, and connector conversion adapter
  - Extension modules, bus conversion module, and connector conversion module
  - Battery

[WIRING PRECAUTIONS]

⚠WARNING

- Make sure to cut off all phases of the power supply externally before attempting installation or wiring work. Failure to do so may cause electric shock or damage to the product.
- Make sure to attach the terminal cover, provided as an accessory, before turning on the power or initiating operation after installation or wiring work. Failure to do so may cause electric shock.
- The temperature rating of the cable should be 70℃ or more.
- Make sure to properly wire to the terminal block (European type) in accordance with the following precautions. Failure to do so may cause electric shock, equipment failures, a short-circuit, wire breakage, malfunctions, or damage to the product.
  - The disposal size of the cable end should follow the dimensions described in the manual.
  - Tightening torque should follow the specifications in the manual.
  - Twist the ends of stranded wires and make sure that there are no loose wires.
  - Do not solder-plate the electric wire ends.
  - Do not connect more than the specified number of wires or electric wires of unspecified size.
  - Affix the electric wires so that neither the terminal block nor the connected parts are directly stressed.

[WIRING PRECAUTIONS]

⚠CAUTION

- Connect the power supply wiring to the dedicated terminals described in this manual. If an AC power supply is connected to a DC input/output terminal or DC power supply terminal, the PLC will burn out.
- Do not apply the 24 V DC power before wiring the entire AnyWireASLINK system.
- Make sure to observe the following precautions in order to prevent any damage to the machinery or accidents due to malfunction of the PLC caused by abnormal data written to the PLC due to the effects of noise:
  - Do not bundle the power line and control line together with or lay them close to the main circuit, high-voltage line, load line or power line. As a guideline, lay the power line, control line and communication cables at least 100 mm away from the main circuit, high-voltage line, load line or power line.
  - Ground the shield of the shielded wire or shielded cable at one point on the PLC. However, do not use common grounding with heavy electrical systems.
- Place the cables in a duct or clamp them. If not, dangling cable may swing or inadvertently be pulled, resulting in damage to the module or cables or malfunction due to poor contact.
- When disconnecting the cable from the module, do not pull the cable by the cable part. For the cable connected to the terminal block, loosen the terminal screw. Pulling the cable connected to the module may result in malfunction or damage to the module or cable.

[STARTUP AND MAINTENANCE PRECAUTIONS]

⚠WARNING

- Do not touch any terminal while the PLC's power is on. Doing so may cause electric shock or malfunctions.
- Before cleaning or retightening terminals, cut off all phases of the power supply externally. Failure to do so in the power ON status may cause electric shock.
- Before modifying the program in operation, forcible output, running or stopping the PLC, read through this manual carefully, and ensure complete safety. An operation error may damage the machinery or cause accidents.
- Do not change the program in the PLC from two or more peripheral equipment devices at the same time. (i. e. from an engineering tool and a GOT) Doing so may cause destruction or malfunction of the PLC program.

[STARTUP AND MAINTENANCE PRECAUTIONS]

⚠CAUTION

- Do not disassemble or modify the PLC. Doing so may cause fire, equipment failures, or malfunctions. For repair, contact your local Mitsubishi Electric representative.
- Turn off the power to the PLC before connecting or disconnecting any extension cable. Failure to do so may cause device failures or malfunctions.
- Turn off the power to the PLC before attaching or detaching the following devices. Failure to do so may cause device failures or malfunctions.
  - Peripheral devices, expansion board, expansion adapter, and connector conversion adapter
  - Extension modules, bus conversion module, and connector conversion module
  - Battery
- Do not drop the product or exert strong impact to it. Doing so may cause damage.

[OPERATION PRECAUTIONS]

⚠CAUTION

- Construct an interlock circuit in the program so that the whole system always operates on the safe side before executing the control (for data change) of the PLC in operation. Read the manual thoroughly and ensure complete safety before executing other controls (for program change, parameter change, forcible output and operation status change) of the PLC in operation. Otherwise, the machine may be damaged and accidents may occur by erroneous operations.

[DISPOSAL PRECAUTIONS]

⚠CAUTION

- Please contact a certified electronic waste disposal company for the environmentally safe recycling and disposal of your device.

[TRANSPORTATION PRECAUTIONS]

⚠ CAUTION

- The PLC is a precision instrument. During transportation, avoid impacts larger than those specified in the general specifications of the User's Manual (Hardware) of the CPU module used by using dedicated packaging boxes and shock-absorbing palettes. Failure to do so may cause failures in the PLC. After transportation, verify operation of the PLC and check for damage of the mounting part, etc.

INTRODUCTION

This manual contains text, diagrams and explanations which will guide the reader in the correct installation, safe use and operation of the AnyWireASLINK system master module of MELSEC iQ-F series and should be read and understood before attempting to install or use the module.
Always forward it to the end user.
This module was jointly developed by Mitsubishi Electric and Anywire Corporation. The module allows the AnyWireASLINK system to be connected to a MELSEC iQ-F series programmable controller system.

Regarding use of this product

- This product has been manufactured as a general-purpose part for general industries, and has not been designed or manufactured to be incorporated in a device or system used in purposes related to human life.
- Before using the product for special purposes such as nuclear power, electric power, aerospace, medicine or passenger movement vehicles, consult Mitsubishi Electric.
- This product has been manufactured under strict quality control. However when installing the product where major accidents or losses could occur if the product fails, install appropriate backup or failsafe functions in the system.

Note

- If in doubt at any stage during the installation of the product, always consult a professional electrical engineer who is qualified and trained in the local and national standards. If in doubt about the operation or use, please consult the nearest Mitsubishi Electric representative.
- Since the examples indicated by this manual, technical bulletin, catalog, etc. are used as a reference, please use it after confirming the function and safety of the equipment and system. Mitsubishi Electric will accept no responsibility for actual use of the product based on these illustrative examples.
- This manual content, specification etc. may be changed, without a notice, for improvement.
- The information in this manual has been carefully checked and is believed to be accurate; however, if you notice a doubtful point, an error, etc., please contact the nearest Mitsubishi Electric representative. When doing so, please provide the manual number given at the end of this manual.

CONTENTS

COPYRIGHT 1
PRECAUTIONS REGARDING WARRANTY AND SPECIFICATIONS 1
SAFETY PRECAUTIONS 2
INTRODUCTION 7
RELEVANT MANUALS 12
TERMS 13

CHAPTER 1 OUTLINE 15

CHAPTER 2 SPECIFICATIONS 16

2.1 General Specifications 16
2.2 Power Supply Specifications 16
2.3 Performance Specifications 17
2.4 Part Names 18
LED display 19

CHAPTER 3 PROCEDURES BEFORE OPERATION 20

CHAPTER 4 FUNCTION 22

4.1 Function List 22
4.2 AnyWireASLINK Transmission 23
4.3 Double Verification 24
4.4 Remote Address Change Function 25
4.5 Same ID Used Detection Function 26
4.6 Module with No ID Setting Detection Function 28
4.7 Transmission Cable Short Detection Function 29
4.8 Disconnected Transmission Cable Location Detection Function 30
4.9 Transmission Cable Voltage Drop Detection Function 31
4.10 Parameter Access Error Detection Function 32
4.11 Error Status Automatic Recovery Function 34
4.12 Slave Information Acquisition at Start-up Function 34
4.13 Slave Module Parameter Read/Write 35

CHAPTER 5 SYSTEM CONFIGURATION 40

5.1 System Configuration of AnyWireASLINK 40
5.2 Power Supply to the AnyWireASLINK System 41
Method of supplying the power to the slave module 41
Scope of the power supply with transmission cables (DP and DN) 41

CHAPTER 6 WIRING 45

6.1 Terminal Block 45
6.2 Wiring Method 46
6.3 Wiring Product 47
6.4 Wiring Precautions 48
6.5 Power Supply/grounding Wiring 48
Power supply/grounding wiring 48
Grounding 48
6.6 Connecting Slave Module or Terminating Unit 49

CHAPTER 7 PARAMETER SETTINGS 51

7.1 Parameter Setting Procedure . . . 51
7.2 Basic Setting . . . 51
Transmission points . . . 52
Startup operating mode . . . 52
Double verification . . . 52
Error status automatic recovery . . . 52
7.3 Refresh Setting . . . 53
7.4 Slave Module Address Setting . . . 54
7.5 Automatic Address Detection Function . . . 55
Executing the automatic address detection . . . 55
Automatic address detection execution timing . . . 57
7.6 Automatic Reading of the System Configuration . . . 58

CHAPTER 8 PROGRAMMING 59

8.1 Precautions on Programming . . . 59
8.2 Communication of FX5-ASL-M with Slave Module . . . 60
System configuration example . . . 60
FX5-ASL-M setting . . . 61
Settings of the slave module . . . 63
Checking the system status . . . 63
Program example . . . 64

CHAPTER 9 TROUBLESHOOTING 65

9.1 Checking with LED . . . 65
9.2 Checking Module Status . . . 67
Checking with the buffer memory . . . 67
9.3 Troubleshooting by Symptom . . . 68
9.4 List of Error Codes . . . 69

APPENDICES 71

Appendix 1 External Dimensions . . . 71
Appendix 2 Standards . . . 72
Certification of UL, cUL standards . . . 72
Compliance with EC directive (CE Marking) . . . 72
Requirement for compliance with EMC directive . . . 72
Caution for compliance with EC Directive . . . 72
Appendix 3 Module Label . . . 73
Appendix 4 Buffer Memory . . . 74
List of buffer memory addresses . . . 74
Details of buffer memory addresses . . . 75
Appendix 5 Processing Time . . . 85
Transmission cycle time . . . 85
Update timing of I/O data . . . 85
Response delay time . . . 86
Parameter access response time . . . 87

INDEX **88**

REVISIONS 90
WARRANTY 91
TRADEMARKS 92

RELEVANT MANUALS

Manual name <manual number>	Description
MELSEC iQ-F FX5 User's Manual (Startup) <JY997D58201>	Performance specifications, procedures before operation, and troubleshooting of the CPU module.
MELSEC iQ-F FX5U User's Manual (Hardware) <JY997D55301>	Describes the details of hardware of the FX5U CPU module, including input/output specifications, wiring, installation, and maintenance.
MELSEC iQ-F FX5UC User's Manual (Hardware) <JY997D61401>	Describes the details of hardware of the FX5UC CPU module, including input/output specifications, wiring, installation, and maintenance.
MELSEC iQ-F FX5 User's Manual (Application) <JY997D55401>	Describes basic knowledge required for program design, functions of the CPU module, devices/labels, and parameters.
MELSEC iQ-F FX5 Programming Manual (Program Design) <JY997D55701>	Describes specifications of ladders, ST, FBD/LD, and other programs and labels.
MELSEC iQ-F FX5 Programming Manual (Instructions, Standard Functions/Function Blocks) <JY997D55801>	Describes specifications of instructions and functions that can be used in programs.
MELSEC iQ-F FX5 User's Manual (Serial Communication) <JY997D55901>	Describes N:N network, Parallel link, MELSEC Communication protocol, inverter communication, non-protocol communication, and predefined protocol support.
MELSEC iQ-F FX5 User's Manual (MELSEC Communication Protocol) <JY997D60801>	Explains methods for the device that is communicating with the CPU module by MC protocol to read and write the data of the CPU module.
MELSEC iQ-F FX5 User's Manual (MODBUS Communication) <JY997D56101>	Describes MODBUS serial communication.
MELSEC iQ-F FX5 User's Manual (Ethernet Communication) <JY997D56201>	Describes the functions of the built-in Ethernet port communication function.
MELSEC iQ-F FX5 User's Manual (SLMP) <JY997D56001>	Explains methods for the device that is communicating with the CPU module by SLMP to read and write the data of the CPU module.
MELSEC iQ-F FX5 User's Manual (CC-Link IE) <JY997D64201>	Describes CC-Link IE field network module.
MELSEC iQ-F FX5 User's Manual (CC-Link) <SH-081793ENG>	Describes CC-Link system master/intelligent device module.
MELSEC iQ-F FX5 User's Manual (ASLINK) <SH-081796ENG> (This manual)	Describes AnyWireASLINK system master module.
MELSEC iQ-F FX5 User's Manual (Positioning Control - CPU module built-in, High-speed pulse input/output module) <JY997D56301>	Describes the positioning function of the CPU module built-in and the high-speed pulse input/output module.
MELSEC iQ-F FX5 User's Manual (Positioning Control - Intelligent function module) <SH-081805ENG>	Describes the positioning module.
MELSEC iQ-F FX5 Simple Motion Module User's Manual (Startup) <IB0300251>	Specifications, procedures before operation, system configuration, wiring, and operation examples of the Simple Motion module.
MELSEC iQ-F FX5 Simple Motion Module User's Manual (Application) <IB0300253>	Functions, input/output signals, buffer memories, parameter settings, programming, and troubleshooting of the Simple Motion module.
MELSEC iQ-F FX5 Simple Motion Module User's Manual (Advanced Synchronous Control) <IB0300255>	Functions and programming for the synchronous control of the Simple Motion module.
MELSEC iQ-F FX5 User's Manual (Analog Control - CPU module built-in, Expansion adapter) <JY997D60501>	Describes the analog function of the CPU module built-in and the analog adapter.
MELSEC iQ-F FX5 User's Manual (Analog Control - Intelligent function module) <SH-081802ENG>	Describes the multiple input module (voltage, current, thermocouple, and resistance temperature detector).
MELSEC iQ-F FX5 User's Manual (Temperature Control) <SH-081799ENG>	Describes the temperature control module.
GX Works3 Operating Manual <SH-081215ENG>	System configuration, parameter settings, and online operations of GX Works3.
Transition from MELSEC FX3U, FX3UC Series to MELSEC iQ-F Series Handbook <JY997D66201>	Describes the transition from MELSEC FX3U/FX3UC series to MELSEC iQ-F series.

TERMS

Unless otherwise specified, this manual uses the following terms.
For details on the FX3 devices that can be connected with the FX5, refer to the User's Manual (Hardware) of the CPU module to be used.

Terms	Description
■Devices	
FX5	Generic term for FX5U and FX5UC PLCs
FX3	Generic term for FX3S, FX3G, FX3GC, FX3U, and FX3UC PLCs
FX5 CPU module	Generic term for FX5U CPU module and FX5UC CPU module
FX5U CPU module	Generic term for FX5U-32MR/ES, FX5U-32MT/ES, FX5U-32MT/ESS, FX5U-64MR/ES, FX5U-64MT/ES, FX5U-64MT/ESS, FX5U-80MR/ES, FX5U-80MT/ES, FX5U-80MT/ESS, FX5U-32MR/DS, FX5U-32MT/DS, FX5U-32MT/DSS, FX5U-64MR/DS, FX5U-64MT/DS, FX5U-64MT/DSS, FX5U-80MR/DS, FX5U-80MT/DS, and FX5U-80MT/DSS
FX5UC CPU module	Generic term for FX5UC-32MT/D, FX5UC-32MT/DSS, FX5UC-64MT/D, FX5UC-64MT/DSS, FX5UC-96MT/D, and FX5UC-96MT/DSS
Extension module	Generic term for FX5 extension modules and FX3 function modules
• FX5 extension module	Generic term for I/O modules, FX5 extension power supply modules, and FX5 intelligent function modules
• FX3 extension module	Generic term for FX3 extension power supply module and FX3 intelligent function module
• Extension module (extension cable type)	Generic term for Input modules (extension cable type), Output modules (extension cable type), Input/output modules (extension cable type), Powered input/output module, High-speed pulse input/output module, Extension power supply module (extension cable type), Connector conversion module (extension cable type), Intelligent function modules, and Bus conversion module (extension cable type)
• Extension module (extension connector type)	Generic term for Input modules (extension connector type), Output modules (extension connector type), Input/output modules (extension connector type), Extension power supply module (extension connector type), Connector conversion module (extension connector type), and Bus conversion module (extension connector type)
I/O module	Generic term for Input modules, Output modules, Input/output modules, Powered input/output modules, and High-speed pulse input/output modules
Input module	Generic term for Input modules (extension cable type) and Input modules (extension connector type)
• Input module (extension cable type)	Generic term for FX5-8EX/ES and FX5-16EX/ES
• Input module (extension connector type)	Generic term for FX5-C16EX/D, FX5-C16EX/DS, FX5-C32EX/D, and FX5-C32EX/DS
Output module	Generic term for Output modules (extension cable type) and Output modules (extension connector type)
• Output module (extension cable type)	Generic term for FX5-8EYR/ES, FX5-8EYT/ES, FX5-8EYT/ESS, FX5-16EYR/ES, FX5-16EYT/ES, and FX5-16EYT/ESS
• Output module (extension connector type)	Generic term for FX5-C16EYT/D, FX5-C16EYT/DSS, FX5-C32EYT/D, and FX5-C32EYT/DSS
Input/output module	Generic term for Input/output modules (extension cable type) and Input/output modules (extension connector type)
• Input/output module (extension cable type)	Generic term for FX5-16ER/ES, FX5-16ET/ES, and FX5-16ET/ESS
• Input/output module (extension connector type)	Generic term for FX5-C32ET/D and FX5-C32ET/DSS
Powered input/output module	Generic term for FX5-32ER/ES, FX5-32ET/ES, FX5-32ET/ESS, FX5-32ER/DS, FX5-32ET/DS, and FX5-32ET/DSS
High-speed pulse input/output module	Generic term for FX5-16ET/ES-H and FX5-16ET/ESS-H
Extension power supply module	Generic term for FX5 extension power supply module and FX3 extension power supply module
• FX5 extension power supply module	Generic term for FX5 extension power supply module (extension cable type) and FX5 extension power supply module (extension connector type)
• FX5 extension power supply module (extension cable type)	Different name for FX5-1PSU-5V
• FX5 extension power supply module (extension connector type)	Different name for FX5-C1PS-5V
• FX3 extension power supply module	Different name for FX3U-1PSU-5V
Intelligent module	The abbreviation for intelligent function modules
Intelligent function module	Generic term for FX5 intelligent function modules and FX3 intelligent function modules
• FX5 intelligent function module	Generic term for FX5-8AD, FX5-4LC, FX5-20PG-P, FX5-40SSC-S, FX5-80SSC-S, FX5-CCLIEF, FX5-CCL-MS, and FX5-ASL-M

Terms	Description
• FX3 intelligent function module	Generic term for FX3U-4AD, FX3U-4DA, FX3U-4LC, FX3U-1PG, FX3U-2HC, FX3U-16CCL-M, FX3U-64CCL, and FX3U-128ASL-M
Expansion board	Generic term for board for FX5U CPU module
• Communication board	Generic term for FX5-232-BD, FX5-485-BD, and FX5-422-BD-GOT
Expansion adapter	Generic term for adapter for FX5 CPU module
• Communication adapter	Generic term for FX5-232ADP and FX5-485ADP
• Analog adapter	Generic term for FX5-4AD-ADP, FX5-4DA-ADP, FX5-4AD-PT-ADP, and FX5-4AD-TC-ADP
Bus conversion module	Generic term for Bus conversion module (extension cable type) and Bus conversion module (extension connector type)
• Bus conversion module (extension cable type)	Different name for FX5-CNV-BUS
• Bus conversion module (extension connector type)	Different name for FX5-CNV-BUSC
Connector conversion module	Generic term for Connector conversion module (extension cable type) and Connector conversion module (extension connector type)
• Connector conversion module (extension cable type)	Different name for FX5-CNV-IF
• Connector conversion module (extension connector type)	Different name for FX5-CNV-IFC
Extended extension cable	Generic term for FX5-30EC and FX5-65EC
Connector conversion adapter	Different name for FX5-CNV-BC
Battery	Different name for FX3U-32BL
Peripheral device	Generic term for engineering tools and GOTs
GOT	Generic term for Mitsubishi Electric Graphic Operation Terminal GOT1000 and GOT2000 series
■Software packages	
Engineering tool	The product name of the software package for the MELSEC programmable controllers
GX Works3	The product name of the software package, SWnDND-GXW3, for the MELSEC programmable controllers (The 'n' represents a version.)
■AnyWireASLINK	
AnyWireASLINK	A reduced wiring network where sensors at the end of a control system are connected to a programmable controller.
ASLINKAMP	A genetic term for sensor amplifiers that have an AnyWireASLINK interface
ASLINKER	A genetic term for I/O devices that have an AnyWireASLINK interface
ID	A parameter to identify whether the module is an input module or output module based on its address Output slave module ID: Address ID of the input slave module or I/O combined slave module: Address + 200H
RAS	The abbreviation for Reliability, Availability, and Serviceability. This term refers to usability of automated equipment.
Address	A parameter assigned to a slave module to identify each node on the AnyWireASLINK network
Address writer	A hand-held device to read/write parameters (including addresses) from/to a slave module
Slave module	A generic term for modules that communicate data with the FX5-ASL-M
Terminating unit	A waveform shaper
Power cable (24V, 0V)	A cable that connects a 24 V DC external power supply to the FX5-ASL-M. This cable is also used when the isolation (4-line) type slave module and FX5-ASL-M are connected.
Transmission cycle time	A data sampling interval
Transmission cable (DP, DN)	A signal cable that connects between a slave module and the FX5-ASL-M

1 OUTLINE

The FX5-ASL-M type AnyWireASLINK system master module (hereinafter referred to as FX5-ASL-M) is an intelligent function module for building an AnyWireASLINK system with FX5 CPU module.
The FX5-ASL-M is jointly developed and manufactured by Mitsubishi Electric and Anywire Corporation.
The AnyWireASLINK system is a sensor network system.

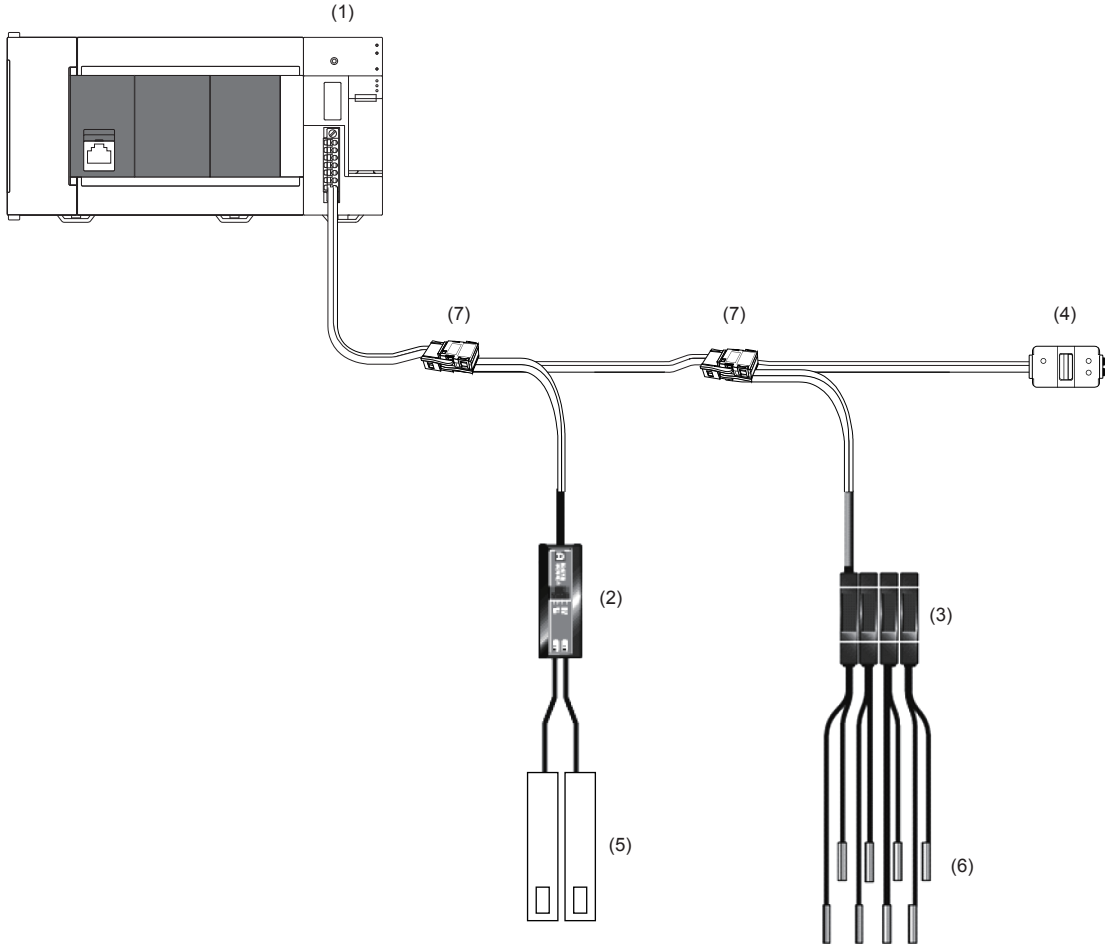

(1) FX5-ASL-M
(2) Slave module (ASLINKER)
(3) Slave module (ASLINKAMP)
(4) Terminating unit
(5) Cylinder, switch, or others
(6) Sensor head
(7) Link connector

2 SPECIFICATIONS

This chapter describes the FX5-ASL-M specifications.

2.1 General Specifications

The items other than the following are equivalent to those of the CPU module.
For the general specification, refer to the following manual.
📖MELSEC iQ-F FX5U User's Manual (Hardware)
📖MELSEC iQ-F FX5UC User's Manual (Hardware)

Items	Specifications	
Dielectric withstand voltage	500 V AC for 1 minute	Between all terminals and ground terminal
Insulation resistance	10 MΩ or higher by 500 V DC insulation resistance tester	

2.2 Power Supply Specifications

The following table lists the power supply specifications.

Items		Specifications
External power supply	Power supply voltage	24 V DC +15%, -10%, ripple voltage 0.5 Vp-p or lower Recommended voltage: 26.4 V DC (24 V DC +10%) Please use a UL Class 2 power supply
	Current consumption	100 mA
	Transmission cable supply current*1	MAX 2 A
Internal power supply	Power supply voltage	5 V DC
	Current consumption	200 mA

*1 Refer to the following for information about the relationship among the total length, the wire diameter of transmission cables (DP, DN), and the transmission cable supply current.
On some slave modules with cables, the wire diameter of module-integrated transmission cables (DP, DN) may be smaller than 0.75 mm². However, they can be used without any problem, provided that the wire diameter of transmission cables (DP, DN) meets the following requirements.

Wire diameter of transmission cables (DP, DN)	Transmission cable supply current		
	Total length of 50 m or less	Total length of 50 to 100 m	Total length of 100 to 200 m
1.25 mm²	2 A maximum	1 A maximum	0.5 A maximum
0.75 mm²	1.2 A maximum	0.6 A maximum	0.3 A maximum

2.3 Performance Specifications

The following table lists the performance specifications of the FX5-ASL-M.

Items	Specifications
Transmission clock	27.0 kHz
Maximum transmission distance (total length)	200 m[*1]
Transmission system	DC power superimposed total frame cyclic system
Connection type	Bus topology (multidrop system, T-branch system, tree branch system)
Transmission protocol	Dedicated protocol (AnyWireASLINK)
Error control	Checksum, double-check system
Number of connected I/O points	384 points maximum[*2] (input: maximum 256 points, output: maximum 256 points)
Number of connected slave modules	128 maximum (varies depending on the current consumption of each slave module)
External interface (power supply part/communication part)	Push-in type 7-piece spring clamp terminal block
RAS function	• Disconnected transmission cable location detection function • Transmission cable short detection function • Transmission cable voltage drop detection function
Transmission cable (DP, DN)	• UL-listed general-purpose 2-wire cable (VCTF, VCT 1.25 mm², 0.75 mm², temperature rating 70℃ or higher) • UL-listed general-purpose wire (1.25 mm², 0.75 mm², temperature rating 70℃ or higher) • Dedicated flat cable (1.25 mm², 0.75 mm², temperature rating 90℃)
Power supply cable (24V, 0V)	• UL-listed general-purpose 2-wire cable (VCTF, VCT 0.75 mm² to 2.0 mm², temperature rating 70℃ or higher) • UL-listed general-purpose wire (0.75 mm² to 2.0 mm², temperature rating 70℃ or higher) • Dedicated flat cable (1.25 mm², 0.75 mm², temperature rating 90℃)
Memory	Built-in EEPROM (Number of times of overwrite : 100000 times)
Number of occupied I/O points	8 points
Applicable CPU module	• FX5U CPU module (Ver. 1.050 or later) • FX5UC CPU module[*3] (Ver. 1.050 or later)
Applicable engineering tool	GX Works3 (Ver. 1.035M or later)
Number of connectable units	1 module[*4]

*1 For slave modules with integrated transmission cables (DP, DN), the length of the transmission cables (DP, DN) is included in the total length.
For wiring of 50 m or more with 4 wires (DP, DN, 24V, 0V), insert the noise filter for power supply cables between the power supply and cables. For details, refer to the manual for the AnyWireFILTER (ANF-01) manufactured by Anywire Corporation.

*2 The number of available remote I/O points per CPU module varies depending on the number of I/O points of the extension devices. For the limit of I/O points, refer to the following manual.
📖MELSEC iQ-F FX5U User's Manual (Hardware)
📖MELSEC iQ-F FX5UC User's Manual (Hardware)

*3 FX5-CNV-IFC or FX5-C1PS-5V is necessary to connect FX5-ASL-M to the FX5UC CPU module.

*4 FX5-ASL-M and FX3U-128ASL-M cannot be used together.

2.4 Part Names

This chapter describes the names of each part of the FX5-ASL-M.

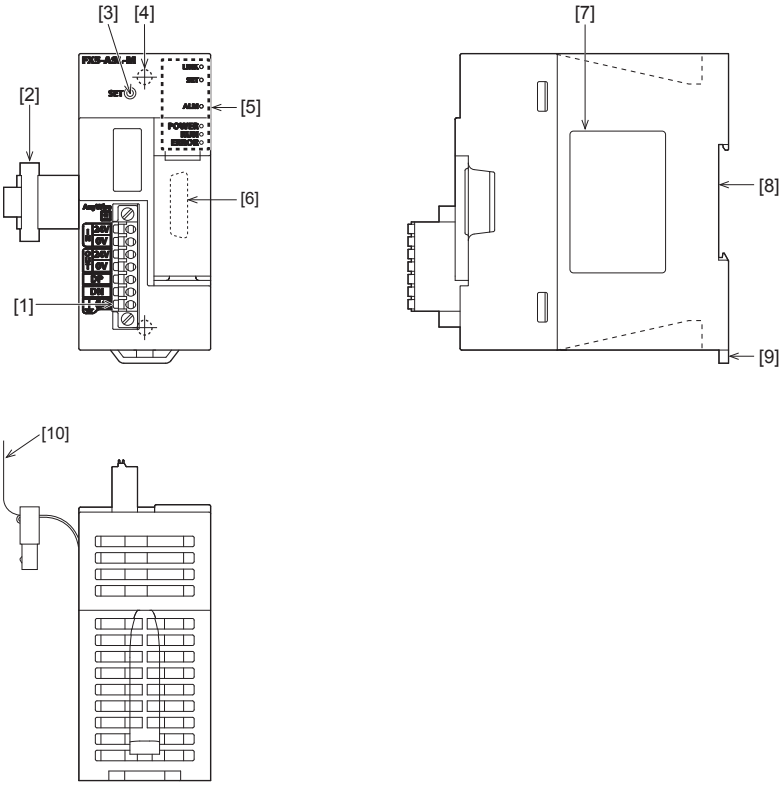

No.	Name	Description
[1]	Transmission cable terminal block	A terminal block of the AnyWireASLINK
[2]	Extension cable	Cable for connecting the module when adding the FX5-ASL-M
[3]	SET switch	Switch for automatic detection of the slave module ID (address)
[4]	Direct mounting hole	Screw holes (2-ϕ4.5, mounting screw: M4 screw) for direct installation
[5]	Operation status display LEDs	Indicates the operating status of the module. (☞ Page 19 LED display)
[6]	Extension connector (for next module)	Connector for connecting the extension cable of an extension module.
[7]	Name plate	The product model name, manufacturer's serial number etc. are shown.
[8]	DIN rail mounting groove	The module can be installed on DIN46277 rail (35 mm wide).
[9]	DIN rail mounting hook	Hook for mounting the module on a DIN rail of DIN46277 (35 mm wide).
[10]	Pullout tab	They are used when drawing out an extension cable.

LED display

The following table lists the LED display.

LED display	LED color	Description
POWER	Green	Indicates the operating status. On: Power on Off: Power off or module failure
RUN	Green	Indicates the operating status. On: Normal operation Off: Error
ERROR	Red	Indicates the error status. On: Minor error or major error Flashing: Moderate error or major error Off: Normal operation
LINK	Green	Indicates the link status. Flashing: Normal operation Off: 5 V DC power off or module failure
SET	Green	Indicates the address detection status. On: Automatic address detection in progress Flashing: Writing in the EEPROM Off: Normal operation
ALM	Red	Indicates the warning status. On: DP/DN disconnection, no response from the slave module Flashing (1-second intervals): DP-DN short circuit, 24V-DP short circuit Flashing (0.2-second intervals): A 24 V DC power supply is not being supplied or the voltage is low. Off: Normal operation

3 PROCEDURES BEFORE OPERATION

This chapter describes the procedures before operation.

1. Checking the specifications of the FX5-ASL-M

Check the specifications of the FX5-ASL-M. (☞ Page 16 SPECIFICATIONS)

2. Installation of the FX5-ASL-M

Connect the FX5-ASL-M to the CPU module. For details, refer to the following.

📖MELSEC iQ-F FX5U User's Manual (Hardware)

📖MELSEC iQ-F FX5UC User's Manual (Hardware)

3. Configuring a system

Configure an AnyWireASLINK system and set parameters which are required for start-up.

- Wiring (☞ Page 45 WIRING)
- Parameter setting (☞ Page 51 PARAMETER SETTINGS)
- Address setting of slave modules (☞ Page 54 Slave Module Address Setting)
- Automatic address detection function (☞ Page 55 Automatic Address Detection Function)

4. Powering on the system

Power on and start the system in the order shown below.

- Turn on the 24 V DC external power supply for the AnyWireASLINK system.
- Turn on the power supply of the programmable controller.

5. Checking operations with the LEDs

Check whether communications are established normally.

When the communications are established normally, the following LED on/off statuses are as follows.

- POWER LED: On
- RUN LED: On
- ERROR LED: Off
- LINK LED: Flashing
- SET LED: Off
- ALM LED: Off

6. Programming

Create a program. For details, refer to the following.

☞ Page 59 PROGRAMMING

Point

- If the programmable controller is powered on before the 24 V DC external power supply in the AnyWireASLINK system, a transmission cable voltage drop detection error may occur.
- To power off the system, power off the programmable controller, and turn off the 24 V DC external power supply in the AnyWireASLINK system.

MEMO

4 FUNCTION

4.1 Function List

The following table lists the function available for the FX5-ASL-M.

AnyWireASLINK transmission

Function	Description	Reference
Bit transmission	Exchanges I/O data of up to 384 points (input max. 256 points, output max. 256 points) between the FX5-ASL-M and a slave module.	Page 23
Double check	A double check is an error control system. In this system, cycle data in AnyWireASLINK transmission is recognized as valid data if the data matches with the data of the last transmission or is ignored as invalid data if the data does not match with the last data. A double check ensures reliability of communication.	Page 24
Slave module parameter read/write	In AnyWireASLINK, parameter information of a slave module and the AnyWireASLINK system in addition to I/O information are sent and received between the FX5-ASL-M and a slave module. Execute this function to check or change parameter information of a slave module.	Page 35

Address setting

Function	Description	Reference
Automatic address detection function	Enables the FX5-ASL-M to detect and store the ID (address) of the connected slave module when the SET switch on the FX5-ASL-M is pressed.	Page 55
Remote address change function	Changes an ID (address) of a slave module using the buffer memory area without an address writer.	Page 25
Same ID used detection function	Checks whether the same ID is used for multiple slave modules through automatic address detection or same address used check. The LEDs of the relevant slave modules are forcibly turned on.	Page 26
Module with no ID setting detection function	Detects slave modules with no ID assigned (default ID) through automatic address detection or same address used check.	Page 28

RAS

Function	Description	Reference
Transmission cable short detection function	Protects the system by detecting the current out of the specifications of the AnyWireASLINK system across DP-DN or 24V-DP and stopping the transmission.	Page 29
Disconnected transmission cable location detection function	Notifies the ID of a slave module that has been separated from the FX5-ASL-M because of disconnection in the transmission cables (DP, DN) between the FX5-ASL-M and the slave module, to locate the disconnection in the transmission cables (DP, DN) from the upper system.	Page 30
Transmission cable voltage drop detection function	Detects a voltage drop in the 24 V DC external power supply, enabling the FX5-ASL-M to detect a failure in the 24 V DC external power supply or a wiring error from the upper system.	Page 31

Others

Function	Description	Reference
Parameter access error detection function	Allows parameter access errors to be detected.	Page 32
Error status automatic recovery function	Allows for automatic error reset for DP/DN disconnection errors and parameter errors after the error status is cleared.	Page 34
Slave information acquisition at start-up function	Allows for automatic acquisition of information of slave modules when the CPU module is reset or power off and on the system.	Page 34

4.2 AnyWireASLINK Transmission

The AnyWireASLINK is a high-speed and highly reliable system which releases the work site from complicated and incorrect wiring.

In AnyWireASLINK, the FX5-ASL-M communicates with slave modules using IDs (addresses) of the slave modules.

The IDs (addresses) of the slave modules are stored in the buffer memory of the FX5-ASL-M.

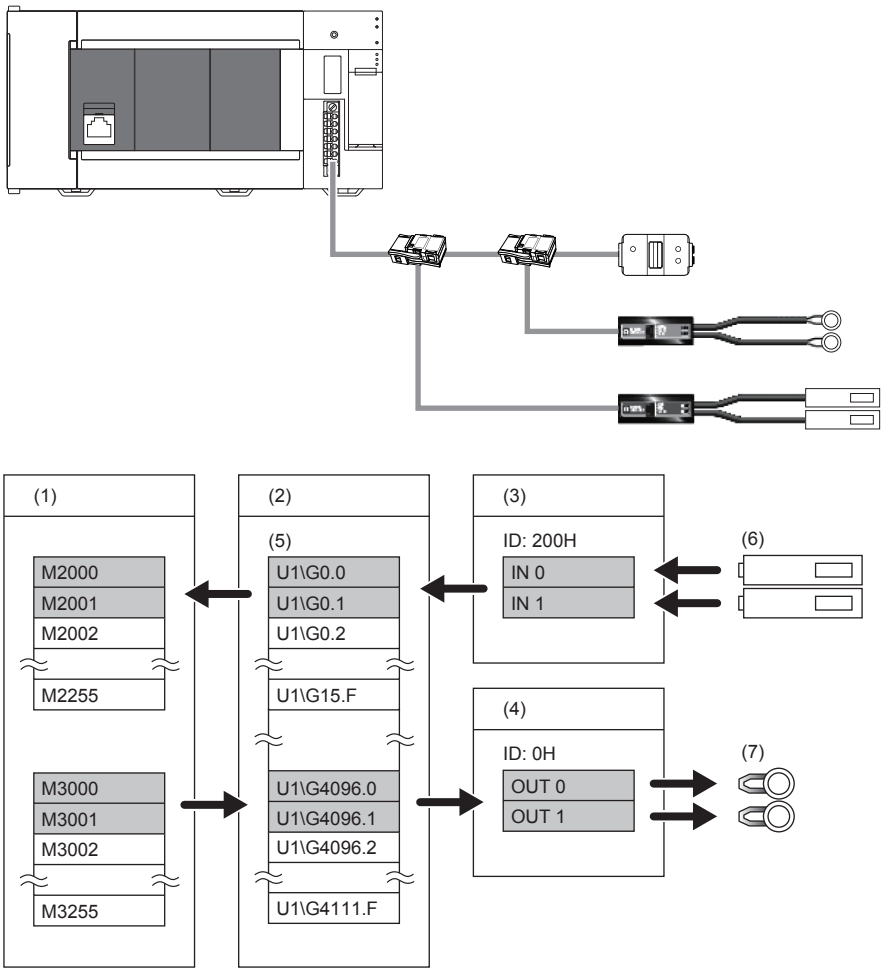

(1) CPU module
(2) FX5-ASL-M
(3) Input slave module (ASLINKER): Address 0
(4) Output slave module (ASLINKER): Address 0
(5) Buffer memory
(6) Sensor switch
(7) LED

Bit transmission

A maximum of 384 I/O data points (input max. 256 points, output max. 256 points) can be exchanged between the FX5-ASL-M and a slave module.

4.3 Double Verification

A double check is an error control system. In this system, cycle data in AnyWireASLINK transmission is recognized as valid data if the data matches with the data of the last transmission or is ignored as invalid data if the data does not match with the last data. The double verification ensures reliability of communication.
The double verification is classified into a bit double verification and word double verification.

Overview

■Bit double verification

If one bit of data is the same between two successive transmission cycles, the data is valid and I/O data is communicated.

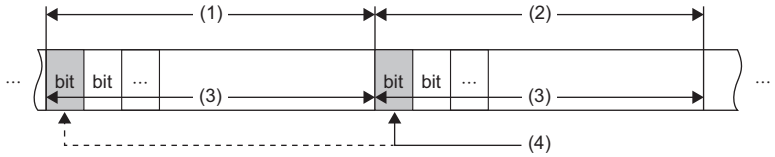

(1) Transmission cycle (last)
(2) Transmission cycle (current)
(3) I/O data
(4) This data is compared with the verification data (one bit) of the last transmission cycle.

■Word double verification

If one word (16 bits) of data is the same between two successive transmission cycles, the data is valid and I/O data is communicated.

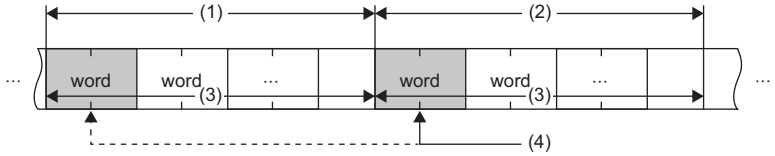

(1) Transmission cycle (last)
(2) Transmission cycle (current)
(3) I/O data
(4) The data is compared with the verification data (one word) of the last transmission cycle.

Point

The bit double verification is suitable for digital I/O type slave modules, which use information in units of bits. The word double verification is suitable for analog I/O type slave modules, which use information in units of words.

Setting method

Set the double verification in "Double verification" of "Basic setting". (☞ Page 52 Double verification)

4.4 Remote Address Change Function

With this function, an ID (address) of a slave module can be changed using the buffer memory area without an address writer.

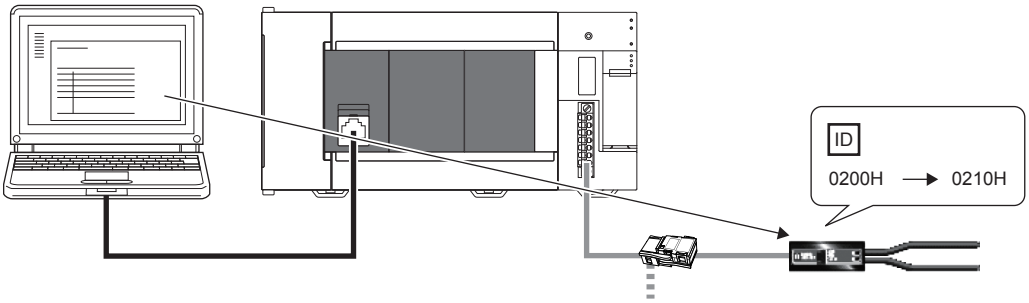

Applicable slave module

For the slave modules that support the remote address change function, contact Anywire Corporation.

Operating procedure

1. Execute automatic address detection to check that no error has occurred in the AnyWireASLINK system. (☞ Page 55 Automatic Address Detection Function)

2. Specify an access method to a slave module.

Store 0002H (address change) in 'Parameter access setting' (Un\G10320).

3. Specify an ID of the slave module to be accessed.

Store the ID to be changed (old ID) in 'Parameter access target module ID specification' (Un\G10321).

ID	Description
0000H to 00FFH	ID of the output slave module
0200H to 02FFH	ID of the input slave module or I/O combined slave module

4. Specify a new ID of the slave module.

Store the new ID in 'Change ID specification' (Un\G10323).

ID	Description
0000H to 00FFH	ID of the output slave module
0200H to 02FFH	ID of the input slave module or I/O combined slave module

If the specified ID has already been used or is out of the allowable specification range, an error occurs.

5. Turn on and off 'Parameter access request command for the slave module' (Un\G27 b8).

At this time, 'Parameter access completion flag' (Un\G28 b9) turns off. When the parameter access is completed, 'Parameter access completion flag' (Un\G28 b9) automatically turns on.

6. After changing the IDs of all the target slave modules, execute automatic address detection. (☞ Page 55 Automatic Address Detection Function)

Precautions

- Before executing this function, make sure to execute automatic address detection to check that no error has occurred in the AnyWireASLINK system. (☞ Page 55 Automatic Address Detection Function)
- This function cannot be executed for slave modules separated from the FX5-ASL-M because of disconnection or slave modules having the same ID. Use an address writer to change the IDs of such slave modules.
- This function can be executed if only one slave module having no ID exists within one AnyWireASLINK line. If IDs of multiple slave modules are not set, it is recognized as an ID duplication. Thus, the IDs cannot be changed.

4.5 Same ID Used Detection Function

This function checks whether the same ID is used for multiple slave modules through automatic address detection or same address used check. The LEDs of the relevant slave modules are forcibly turned on.

Point

- ID duplications are detected through automatic address detection or same address used check. If the CPU module is reset or the power is turned off after ID duplication detection, the same ID used status cannot be checked until automatic address detection or same address used check is executed again.
- Even if an ID is assigned to multiple modules, a single ID is stored in 'Number of the alarm IDs' (Un\G9984) and 'Alarm ID information storage area' (Un\G9985 to Un\G10112). For example, even when multiple modules have an ID 10, "1" is stored in 'Number of the alarm IDs' (Un\G9984) and "10" is stored in 'Alarm ID information storage area' (Un\G9985 to Un\G10112).

How to execute automatic address detection

For details on automatic address detection, refer to the following.

☞ Page 55 Automatic Address Detection Function

How to execute same address used check

Turn off and on 'Overlap address inspection command' (Un\G27 b2). If 'Overlap address inspection flag' (Un\G28 b12) turns on and off, it indicates that the same address used check is completed.

The same address used check cannot be executed under any of the following conditions.

- When an error occurs in the AnyWireASLINK system (Example: Short circuit, 24 V DC external power supply voltage drop)
- Within approximately five seconds after the AnyWireASLINK system is powered on or system is reset
- When automatic address detection is in progress (While 'Automatic address detection flag' (Un\G28 b11) is on)
- When the same address used check is in progress (While 'Overlap address inspection flag' (Un\G28 b12) is on)
- When the parameter access is in progress (While 'Parameter access request command for the slave module' (Un\G27 b8), 'Parameter batch read command for the slave module' (Un\G27 b9), or 'Parameter batch write command for the slave module' (Un\G27 b10) is on)
- When any of the following errors has occurred

Error code	Error description
0CC8H	Transmission cable voltage drop error
0CC9H	DP/DN short error
0CCBH	24V/DP short error
1867H	FX5-ASL-M hardware failure
3064H	
3065H	
3066H	

How to check the same ID used status

When the AnyWireASLINK system is in the following status, the same ID is used for multiple modules.

Even in the same ID used status, the AnyWireASLINK bit transmission does not stop.

- 'Slave module alarm signal' (Un\G28 b8) turns on.
- Same ID used error (error code: 0D90H) is stored in 'Latest error code storage area' (Un\G10256) and the duplicate ID is stored in 'Latest error ID storage area' (Un\G10257).*1
- The relevant ID is stored in 'Alarm ID information storage area' (Un\G9985 to Un\G10112).

*1 If multiple errors occur simultaneously, the latest error is displayed.

How to recover from same ID used status

Check 'Number of the alarm IDs' (Un\G9984) and 'Alarm ID information storage area' (Un\G9985 to Un\G10112). Then set a unique ID (address) in all the slave modules. (☞ Page 78 Number of the alarm IDs, Page 78 Alarm ID information storage area)

Set IDs (addresses) of slave modules and execute automatic address detection of the FX5-ASL-M. Then, the IDs of the slave modules are stored in the FX5-ASL-M and the error is cleared. (☞ Page 55 Automatic Address Detection Function)

Precautions

While an ID (address) is used for multiple slave modules, executing either of the following can eliminate the same ID used error. However, the address is still used for the multiple slave modules.

- Powering off and on the AnyWireASLINK system
- Turning off and on 'Error flag clear command' (Un\G27 b0)

4.6 Module with No ID Setting Detection Function

This function detects slave modules with no ID assigned (default ID) through automatic address detection or same address used check.

Module	Default ID
Input slave module, I/O combined slave module	767
Output slave module	255

Point

- Modules with no ID set are detected through automatic address detection or same address used check. If the CPU module is reset or the power is turned off after a module with no ID set is detected, the no ID number setting status cannot be checked until automatic address detection or same address used check is executed again.
- Even if no ID is assigned to modules, a single ID is stored in 'Number of the alarm IDs' (Un\G9984) and 'Alarm ID information storage area' (Un\G9985 to Un\G10112). For example, even when multiple modules have an ID 255, "1" is stored in 'Number of the alarm IDs' (Un\G9984) and "255" is stored in 'Alarm ID information storage area' (Un\G9985 to Un\G10112).

How to execute automatic address detection

For details on automatic address detection, refer to the following.

☞ Page 55 Automatic Address Detection Function

How to execute same address used check

Turn off and on 'Overlap address inspection command' (Un\G27 b2). If 'Overlap address inspection flag' (Un\G28 b12) turns on and off, it indicates that the same address used check is completed.

The same address used check cannot be executed under any of the following conditions.

- When an error occurs in the AnyWireASLINK system (Example: Short circuit, 24 V DC external power supply voltage drop)
- Within approximately five seconds after the AnyWireASLINK system is powered on or system is reset
- When automatic address detection is in progress (While 'Automatic address detection flag' (Un\G28 b11) is on)
- When the same address used check is in progress (While 'Overlap address inspection flag' (Un\G28 b12) is on)
- When the parameter access is in progress (While 'Parameter access request command for the slave module' (Un\G27 b8), 'Parameter batch read command for the slave module' (Un\G27 b9), or 'Parameter batch write command for the slave module' (Un\G27 b10) is on)
- When any of the following errors has occurred

Error code	Error description
0CC8H	Transmission cable voltage drop error
0CC9H	DP/DN short error
0CCBH	24V/DP short error
1867H	FX5-ASL-M hardware failure
3064H	
3065H	
3066H	

How to check the no ID number setting status

When the AnyWireASLINK system is in the following status, no ID number setting status is detected.
Even in the no ID number setting status, the AnyWireASLINK bit transmission does not stop.

- 'Slave module alarm signal' (Un\G28 b8) turns on.
- No ID setting error (error code: 0D91H) is stored in 'Latest error code storage area' (Un\G10256) and unset ID is stored in 'Latest error ID storage area' (Un\G10257).*1
- Unset IDs are stored in 'Alarm ID information storage area' (Un\G9985 to Un\G10112).

*1 If multiple errors occur simultaneously, the latest error is displayed.

How to recover from the no ID number setting status

Check 'Number of the alarm IDs' (Un\G9984) and 'Alarm ID information storage area' (Un\G9985 to Un\G10112). Then set addresses to slave modules. (☞ Page 78 Number of the alarm IDs, Page 78 Alarm ID information storage area)
Check that "255" is not set as the address of the slave module.
Set IDs (addresses) of slave modules and execute automatic address detection of the FX5-ASL-M. Then, the IDs of the slave modules are stored in the FX5-ASL-M and the error is cleared. (☞ Page 55 Automatic Address Detection Function)

Precautions

While an ID (address) of a slave module is not set, executing either of the following can eliminate the no ID setting error.
However the address of the slave module is still not set.

- Powering off and on the AnyWireASLINK system
- Turning off and on 'Error flag clear command' (Un\G27 b0)

4.7 Transmission Cable Short Detection Function

This function protects the system by detecting the current out of the specifications of the AnyWireASLINK system across DP-DN or 24V-DP and stopping the transmission.

How to check the transmission cable short status

When the AnyWireASLINK system is in the following status, a transmission cable short has occurred.

- The LINK LED turns off and the ALM LED flashes repeatedly at one second intervals.*1
- When any of the transmission cables (DP, DN) is short-circuited, 'DP/DN short error' (Un\G28 b1) turns on.
- When any of the transmission cables (24V, DP) is short-circuited, '24V/DP short error' (Un\G28 b2) turns on.
- A DP/DN short error (error code: 0CC9H) or 24V/DP short error (error code: 0CCBH) is stored in 'Latest error code storage area' (Un\G10256) and 0FFFH is stored in 'Latest error ID storage area' (Un\G10257).*1
- The AnyWireASLINK bit transmission stops.

*1 If multiple errors occur simultaneously, the latest error is displayed.

How to recover from the transmission cable short status

How to recover from the transmission cable short status is as follows.

1. Eliminate the short circuit in the AnyWireASLINK system.

When the short status is exited, AnyWireASLINK bit transmission resumes automatically.
If the status does not change, the short circuit has not been eliminated. Check it again.

2. Power off and on the AnyWireASLINK system or turn on and off 'Error flag clear command' (Un\G27 b0).

The following status is resulted:

- 'DP/DN short error' (Un\G28 b1) and '24V/DP short error' (Un\G28 b2) turn off.
- The ALM LED turns off.
- The data in 'Latest error code storage area' (Un\G10256) and 'Latest error ID storage area' (Un\G10257) are cleared.

4.8 Disconnected Transmission Cable Location Detection Function

This function notifies the ID of a slave module that has been separated from the FX5-ASL-M because of disconnection in the transmission cables (DP, DN) between the FX5-ASL-M and the slave module, to locate the disconnection in the transmission cables (DP, DN) from the upper system.

Point

- To enable the disconnected transmission cable location detection function, execute automatic address detection when configuring, modifying, or expanding the system. (☞ Page 55 Automatic Address Detection Function)
- After a system is configured, the disconnection detection may still work when a slave module is disconnected from the system. Execute automatic address detection after modifying the system.
- Even if disconnection in the transmission cable (DP, DN) is detected, the AnyWireASLINK bit transmission does not stop.

How to check the transmission cable disconnection status

When the AnyWireASLINK system is in the following status, the transmission cable (DP, DN) have been disconnected or a slave module error has occurred.

- The ALM LED turns on.*1
- 'DP/DN disconnection error' (Un\G28 b4) turns on.
- The number of error IDs is stored in 'Number of the error IDs' (Un\G8192).
- The disconnected ID (address) is stored in 'Error ID information storage area' (Un\G8193 to Un\G8320).
- The bits of 'Error ID information bit area (output)' (Un\G8704 to Un\G8719) and 'Error ID information bit area (input)' (Un\G8736 to Un\G8751) corresponding to the disconnected ID (address) turn on.
- DP/DN disconnection error (error code: 0CCAH) is stored in 'Latest error code storage area' (Un\G10256) and the disconnected ID is stored in 'Latest error ID storage area' (Un\G10257).*1

*1 If multiple errors occur simultaneously, the latest error is displayed.

How to recover from the transmission cable disconnection status

How to recover from the transmission cable disconnection status is as follows.

1. Eliminate the disconnection in the AnyWireASLINK system.

When the disconnection status is exited, AnyWireASLINK bit transmission resumes automatically.

When the slave module has been disconnected from the system, execute automatic address detection. (☞ Page 55 Automatic Address Detection Function)

2. Power off and on the AnyWireASLINK system or turn on and off 'Error flag clear command' (Un\G27 b0).

The following status is resulted:

- 'DP/DN disconnection error' (Un\G28 b4) turns off.
- The ALM LED turns off.
- The data in 'Latest error code storage area' (Un\G10256) and 'Latest error ID storage area' (Un\G10257) are cleared.

Point

- When the automatic address detection is executed in step 1, the operation in step 2 is not necessary.
- If the error status automatic recovery mode is set in "Error status automatic recovery" of "Basic setting", the error status is automatically cleared after the disconnection status is exited.

4.9 Transmission Cable Voltage Drop Detection Function

This function detects a voltage drop in the 24 V DC external power supply, enabling the FX5-ASL-M to detect a failure in the 24 V DC external power supply or a wiring error from the upper system.

Point

For the specifications of the 24 V DC external power supply to the FX5-ASL-M, refer to the ☞ Page 16 Power Supply Specifications.

How to check the transmission cable voltage drop status

When the AnyWireASLINK system is in the following status, a voltage drop in the 24 V DC external power supply has been detected.

- The ALM LED flashes at 0.2 second intervals.*1
- 'Transmission cable voltage drop error' (Un\G28 b3) turns on.
- Transmission cable voltage drop error (error code: 0CC8H) is stored in 'Latest error code storage area' (Un\G10256) and 0FFFH is stored in 'Latest error ID storage area' (Un\G10257).*1
- The AnyWireASLINK bit transmission stops.

*1 If multiple errors occur simultaneously, the latest error is displayed.

How to recover from the transmission cable voltage drop status

How to recover from the transmission cable voltage drop status is as follows.

1. Check the voltage of the 24 V DC external power supply and replace the power supply or check the wiring, as necessary.

When the transmission cable voltage drop is corrected, AnyWireASLINK bit transmission resumes automatically.

2. Power off and on the AnyWireASLINK system or turn on and off 'Error flag clear command' (Un\G27 b0).

The following status is resulted:

- 'Transmission cable voltage drop error' (Un\G28 b3) turns off.
- The ALM LED turns off.
- The data in 'Latest error code storage area' (Un\G10256) and 'Latest error ID storage area' (Un\G10257) are cleared.

4.10 Parameter Access Error Detection Function

This function allows parameter access errors to be detected.

- Slave module hardware error (error code: 0D2CH, 0D2DH)
- Parameter access target module ID error (error code: 0D2EH)
- Parameter value error (error code: 0D2FH)
- Parameter access error (error code: 0D30H)
- Slave module status error (error code: 0D31H)
- Same ID used error (error code: 0D90H)
- No ID setting error (error code: 0D91H)
- New ID error (error code: 0D92H)

How to check the parameter access error status

The following table lists parameter access error statuses.

Error description	Status when an error occurred	
	Status information	Buffer memory
Slave module hardware error	'Slave module alarm signal' (Un\G28 b8) turns on.	■'Latest error code storage area' (Un\G10256) The error code is stored.*1 ■'Latest error ID storage area' (Un\G10257) The IDs corresponding to the error codes are stored. ■'Number of the alarm IDs' (Un\G9984)*2 The number of IDs relevant to alarm occurrence is stored. ■'Alarm ID information storage area' (Un\G9985 to Un\G10112)*2 The IDs relevant to alarm occurrence are stored.
Parameter access target module ID error		
Parameter value error		
Parameter access error	'Parameter access error' (Un\G28 b10) turns on.	
Slave module status error	'Slave module alarm signal' (Un\G28 b8) turns on.	
Same ID used error		
No ID setting error		
New ID error		

*1 If multiple errors occur simultaneously, the latest error is displayed.
*2 If an error occurs in parameter access, data are stored in 'Number of the error IDs' (Un\G8192) and 'Error ID information storage area (Un\G8193 to Un\G8320)'.

How to recover from the parameter access error status

How to recover from the parameter access error status is as follows.

■Slave module hardware error

Take measures such as those against noise to remove factors causing errors. Then power off and on the AnyWireASLINK system or turn on and off 'Error flag clear command' (Un\G27 b0).

■Parameter access target module ID error, parameter value error

Remove factors causing errors (for example, parameter access program). Then power off and on the AnyWireASLINK system or turn on and off 'Error flag clear command' (Un\G27 b0).

■Parameter access error

If any of the following errors has occurred, eliminate the error cause.

- Slave module hardware error (error code: 0D2CH, 0D2DH)
- Slave module status error (error code: 0D31H)
- Same ID used error (error code: 0D90H)

When an error occurs in a parameter access due to a cause other than the above errors, the possible cause is noise. Take measures such as those against noise to remove factors causing errors. Then power off and on the AnyWireASLINK system or turn on and off 'Error flag clear command' (Un\G27 b0).

Point

If the error status automatic recovery mode is set in "Error status automatic recovery" of "Basic setting", the error is automatically cleared after recovery from the parameter access error status.

■Slave module status error

Check the status details of the target slave module to remove factors causing errors. Then power off and on the AnyWireASLINK system or turn on and off 'Error flag clear command' (Un\G27 b0).

The status details of the slave module can be checked with the AnyWireASLINK parameter in 'Parameter storage area' (Un\G12288 to Un\G12335).*1

*1 Buffer memory addresses when one slave module is connected. For details, refer to the following.
☞ Page 82 Parameter storage area

■Same ID used error, no ID setting error

Remove factors causing errors (for example, one ID is assigned to multiple modules or a module has no ID). Then power off and on the AnyWireASLINK system or turn on and off 'Error flag clear command' (Un\G27 b0).

■New ID error

Check 'Connected module ID information storage area' (Un\G9217 to Un\G9344) and set a new ID. Then power off and on the AnyWireASLINK system or turn on and off 'Error flag clear command' (Un\G27 b0).

Status after recovery

After recovery from parameter access error status, the following status is resulted:

Error description	Signal status
Slave module hardware error	• 'Slave module alarm signal' (Un\G28 b8) turns off. • The data in 'Latest error code storage area' (Un\G10256) is cleared. • The data in 'Latest error ID storage area' (Un\G10257) is cleared. • The data in 'Number of the alarm IDs' (Un\G9984) is cleared. • The data in 'Alarm ID information storage area' (Un\G9985 to Un\G10112) is cleared.
Parameter access target module ID error	
Parameter value error	
Slave module status error	
Same ID used error	
No ID setting error	
New ID error	
Parameter access error	• 'Parameter access error' (Un\G28 b10) turns off. • The data in 'Latest error code storage area' (Un\G10256) is cleared. • The data in 'Latest error ID storage area' (Un\G10257) is cleared. • The data in 'Number of the error IDs' (Un\G8192) is cleared. • The data in 'Error ID information storage area' (Un\G8193 to Un\G8320) is cleared. • The data in 'Error ID information bit area (output)' (Un\G8704 to Un\G8719) and 'Error ID information bit area (input)' (Un\G8736 to Un\G8751) are cleared.

4.11 Error Status Automatic Recovery Function

This function allows for automatic error reset for DP/DN disconnection errors and parameter errors after the error status is cleared.
(Usually, if an error has occurred, eliminate the error cause, and power off and on the AnyWireASLINK system or turn on and off 'Error flag clear command' (Un\G27 b0).)

Error that can be automatically recovered

The following shows the errors that can be automatically recovered.

Error code	Error description	Status when an error occurred	Status when an error is cleared
0CCAH	DP/DN disconnection error	• 'DP/DN disconnection error' (Un\G28 b4) turns on. • Error ID information is registered in the buffer memory address. (☞ Page 30 How to check the transmission cable disconnection status)	• 'DP/DN disconnection error' (Un\G28 b4) turns off.*1 • The error ID information registered in the buffer memory address is cleared. (corresponding ID only)*2
0D30H	Parameter access error	• 'Parameter access error' (Un\G28 b10) turns on. • Error ID information is registered in the buffer memory address. (☞ Page 32 How to check the parameter access error status)	• 'Parameter access error' (Un\G28 b10) turns off.*1 • The error ID information registered in the buffer memory address is cleared. (corresponding ID only)*2

*1 The error causes must be eliminated from all the slave modules in which errors have occurred.
*2 If the errors 0CCAH and 0D30H have occurred in one slave module, the causes of both the errors must be eliminated.

Setting method

Set the error status automatic recovery function in "Error status automatic recovery" of "Basic setting". (☞ Page 52 Error status automatic recovery)

4.12 Slave Information Acquisition at Start-up Function

This function allows for automatic acquisition of information of slave modules when the CPU module is reset or the power is turned off and on.
The slave information acquisition at start-up function eliminates the needs for reading parameters from slave modules.
For the parameters of the slave module stored, refer to the following.
☞ Page 35 Slave Module Parameter Read/Write

Setting method

Set the slave information acquisition at start-up function in "Startup operating mode" of "Basic setting". (☞ Page 52 Startup operating mode)

Operation at start-up

When communication of the FX5-ASL-M is normally established after the CPU module is reset or the power is turned off and on, the parameters of all the registered slave modules are read all at once. The read parameters are then stored in the buffer memory.

4.13 Slave Module Parameter Read/Write

In AnyWireASLINK, parameter information of a slave module and the AnyWireASLINK system in addition to I/O information are sent and received between the FX5-ASL-M and a slave module.
Use this function to check or change parameter information of a slave module.
For details on the parameter information to be communicated, refer to the following.

- ☞ Page 80 Parameter access setting
- ☞ Page 80 Parameter access target module ID specification
- ☞ Page 81 Parameter storage location memory number
- ☞ Page 82 Parameter storage area

Parameter reading and writing methods

There are four methods as follows to read or write the parameter information from or to a slave module.

Type	Description
Automatic update	The current status of all slave modules and the current values of the sensors are read at regular intervals. (Setting values are excluded.)
Parameter access	All the parameter values of the slave modules are read or written individually in accordance with the setting of reading or writing and the target slave module.
Parameter batch read	All the parameter values of all slave modules are read out into the buffer memory of the FX5-ASL-M.
Parameter batch write	Values set in the buffer memory of the FX5-ASL-M are written to all the parameter of all slave modules.

The following shows the readable/writable parameters.
○: Possible, ×: Impossible

Parameter name		Read/write	Parameter read and write methods				
			Automatic update	Parameter access		Parameter batch read	Parameter batch write
				Read	Write		
Device parameter*1		Read/write	×	○	○	○	○
AnyWireASLINK parameter	Module ID	Read/write	×	○	○	○	○
	Status details	Read	○	○	×	○	×
	Sensing level	Read	○	○	×	○	×

*1 The device parameter name differs depending on the slave module to be used.

Point

Even when the parameter access, parameter batch read, or parameter batch write is executed, the bit transmission speed of AnyWireASLINK is not reduced.

Automatic update

No special operation is required because data are automatically updated. To check the parameter information, refer to the corresponding buffer memory address.

Parameter access

The operating procedure for parameter access is as follows.

■To read parameters

1. Set the access method.

Store 0000H (read) in 'Parameter access setting' (Un\G10320).

2. Set the access target ID.

Store the access target ID in 'Parameter access target module ID specification' (Un\G10321).

ID	Description
0000H to 00FFH	ID of the output slave module
0200H to 02FFH	ID of the input slave module or I/O combined slave module

3. Turn on and off 'Parameter access request command for the slave module' (Un\G27 b8).

At this time, 'Parameter access completion flag' (Un\G28 b9) turns off. When the parameter access is completed, 'Parameter access completion flag' (Un\G28 b9) automatically turns on.

4. The read parameters are stored in the following location of each ID.

Device parameter in 'Parameter storage area' (Un\G12288 to Un\G12335)*1

*1 Buffer memory addresses when one slave module is connected. For details, refer to the following.
☞ Page 82 Parameter storage area

■To write parameters

1. Set the access method.

Store 0001H (write) in 'Parameter access setting' (Un\G10320).

2. Set the access target ID.

Store the access target ID in 'Parameter access target module ID specification' (Un\G10321).

ID	Description
0000H to 00FFH	ID of the output slave module
0200H to 02FFH	ID of the input slave module or I/O combined slave module

3. Store the parameters to be written in the following location.

Device parameter read/write areas in 'Parameter storage area' (Un\G12288 to Un\G12335)*1

*1 Buffer memory addresses when one slave module is connected. For details, refer to the following.
☞ Page 82 Parameter storage area

4. Turn on and off 'Parameter access request command for the slave module' (Un\G27 b8).

At this time, 'Parameter access completion flag' (Un\G28 b9) turns off. When the parameter access is completed, 'Parameter access completion flag' (Un\G28 b9) automatically turns on.

5. Turn off and on 'Parameter access request command for the slave module' (Un\G27 b8) or 'Parameter batch read command for the slave module' (Un\G28 b9) to check that the settings have been saved in the slave module.

Parameter batch read

The procedure for parameter batch read is as follows.

1. Turn on and off 'Parameter batch read command for the slave module' (Un\G27 b9).

At this time, 'Parameter access completion flag' (Un\G28 b9) turns off. When the parameter access is completed, 'Parameter access completion flag' (Un\G28 b9) automatically turns on.

2. The read parameters are stored in the following location of each ID.

Device parameter in 'Parameter storage area' (Un\G12288 to Un\G12335)*1

*1 Buffer memory addresses when one slave module is connected. For details, refer to the following.
☞ Page 82 Parameter storage area

Parameter batch write

The operating procedure for parameter batch write is as follows.

1. Store the parameters to be written in the following location.

Device parameter read/write areas in 'Parameter storage area' (Un\G12288 to Un\G12335)*1

*1 Buffer memory addresses when one slave module is connected. For details, refer to the following.
☞ Page 82 Parameter storage area

2. Turn on and off 'Parameter batch write command for the slave module' (Un\G27 b10).

At this time, 'Parameter access completion flag' (Un\G28 b9) turns off. When the parameter access is completed, 'Parameter access completion flag' (Un\G28 b9) automatically turns on.

3. Turn off and on 'Parameter batch read command for the slave module' (Un\G27 b9) to check that the settings have been saved in the slave module.

Point

- During the parameter access, parameter batch read, and parameter batch write, 'Parameter access completion flag' (Un\G28 b9) is off. When 'Parameter access completion flag' (Un\G28 b9) is off, the parameter access, parameter batch read, and parameter batch write cannot be executed.
- Upon parameter batch read or parameter batch write, the values stored in 'Parameter access setting' (Un\G10320) and 'Parameter access target module ID specification' (Un\G10321) are ignored.
- The buffer memory areas Un\G10496 to Un\G10751 store the start address of the buffer memory area that stores parameters of output slave modules with the IDs. The 48 words from the buffer memory start address is the parameter information of each ID.
- The buffer memory areas Un\G11008 to Un\G11263 store the start address of the buffer memory area that stores parameters of input slave modules or I/O combined slave modules with the IDs. The 48 words from the buffer memory start address is the parameter information of each ID.

Parameter access timing

The parameter access timing is as follows.

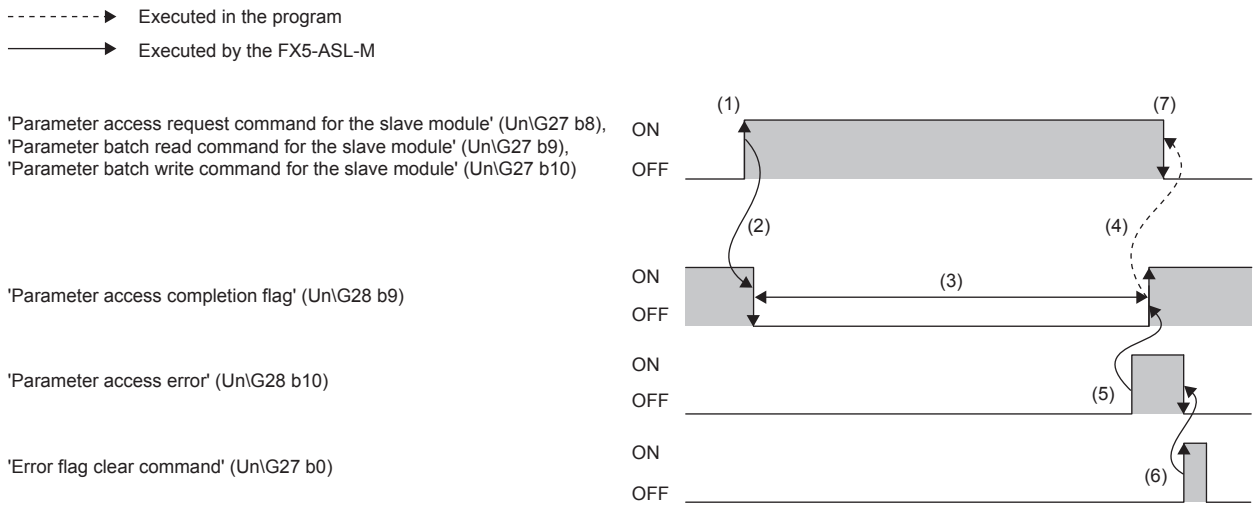

No.	Description
(1)	Turn off and on any of the signals below with a program to start parameter access.*1 • 'Parameter access request command for the slave module' (Un\G27 b8) • 'Parameter batch read command for the slave module' (Un\G27 b9) • 'Parameter batch write command for the slave module' (Un\G27 b10)
(2)	The operation in (1) turns off 'Parameter access completion flag' (Un\G28 b9).
(3)	The parameter access is in progress.
(4)	When parameter access (read/write) is completed, 'Parameter access completion flag' (Un\G28 b9) automatically turns off and on.
(5)	If parameter access has an error, 'Parameter access error' (Un\G28 b10) turns off and on and 'Parameter access completion flag' (Un\G28 b9) automatically turns off and on.*2
(6)	Turning off and on 'Error flag clear command' (Un\G27 b0) with a program turns on and off 'Parameter access error' (Un\G28 b10).
(7)	Turn on and off the signal that has been turned off and on in the step (1) with a program.

*1 Before the start of parameter access from the FX5-ASL-M to the slave module, apply the access method, access target ID, and parameter data to the buffer memory.

*2 Error codes are stored in 'Latest error code storage area' (Un\G10256) and the target IDs are stored in 'Latest error ID storage area' (Un\G10257). (The latest information is overwritten.)

Precautions

■Parameter setting

Parameters cannot be set in the following cases.

- When an error occurs in the AnyWireASLINK system (Example: Short circuit, 24 V DC external power supply voltage drop)
- Within approximately five seconds after the AnyWireASLINK system is powered on or CPU module is reset
- When automatic address detection is in progress (While 'Automatic address detection flag' (Un\G28 b11) is on)
- When the same address used check is in progress (While 'Overlap address inspection flag' (Un\G28 b12) is on)
- When the parameter access is in progress (While 'Parameter access request command for the slave module' (Un\G27 b8), 'Parameter batch read command for the slave module' (Un\G27 b9), or 'Parameter batch write command for the slave module' (Un\G27 b10) is on.)
- When any of the following errors has occurred

Error code	Error description
0CC8H	Transmission cable voltage drop error
0CC9H	DP/DN short error
0CCBH	24V/DP short error
1867H	FX5-ASL-M hardware failure
3064H	
3065H	
3066H	

■Parameter reading and writing

- If parameters are not read after being written, the contents of the parameters do not match between the FX5-ASL-M and slave module. Make sure to read parameters after writing them.
- When parameter read or write is in progress, 'Parameter access completion flag' (Un\G28 b9) turns off. Refer to the section describing the parameter access timing, and adjust the access timing. (☞ Page 38 Parameter access timing)
- When parameter read or write is in progress, do not execute re-access to the parameters and automatic address detection. Doing so can cause a malfunction of the module.

■Parameter access, parameter batch read, and parameter batch write

- These operations cannot be performed to a slave module whose ID has not been registered in the FX5-ASL-M.
- Remove a same ID used error or a no ID setting error of the slave module. Then perform the operations.

■Others

- When the automatic address detection is executed, the parameter batch read is executed simultaneously.
- Note that the FX5-ASL-M may communicate with a slave module and output parameters even if no parameters are set.

5 SYSTEM CONFIGURATION

5.1 System Configuration of AnyWireASLINK

An AnyWireASLINK system consists of the FX5-ASL-M, slave modules, and a terminating unit.
The slave modules and terminating unit are products manufactured by Anywire Corporation.

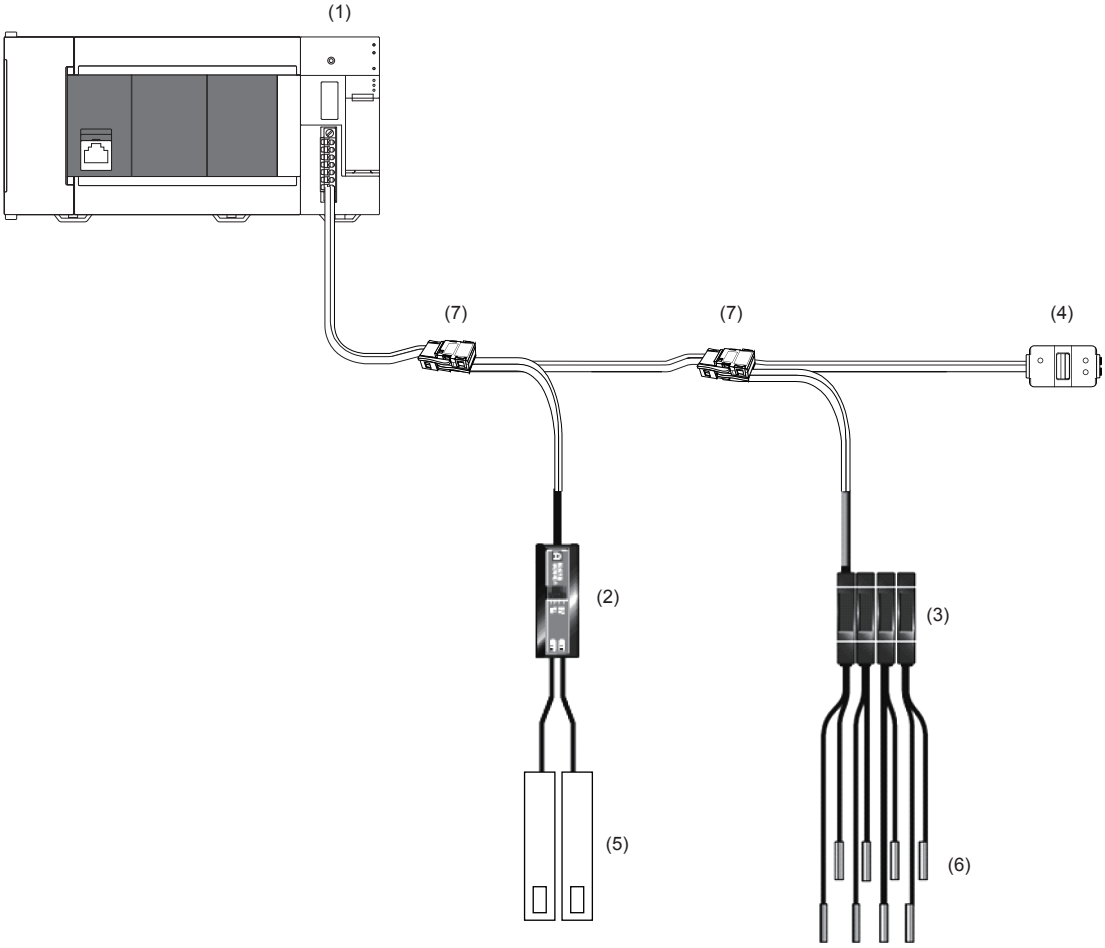

(1) FX5-ASL-M
(2) Slave module (ASLINKER)
(3) Slave module (ASLINKAMP)
(4) Terminating unit
(5) Cylinder, switch, or others
(6) Sensor head
(7) Link connector

For the number of connectable slave modules, refer to the following.

☞ Page 17 Performance Specifications

5.2 Power Supply to the AnyWireASLINK System

Method of supplying the power to the slave module

Connect a 24 V DC external power supply to the FX5-ASL-M.

The power consumed in the internal control circuits of all the slave modules and the external load power connected to non-isolation slave modules are supplied collectively from the 24 V DC external power supply connected to the FX5-ASL-M. (☞ Page 16 Power Supply Specifications)

Scope of the power supply with transmission cables (DP and DN)

The current consumption of the system must satisfy all the following conditions for an FX5-ASL-M.

Item	Calculation formula	Description
Condition 1	I(A) = (Ihin × m) + (Iho × n) + (Izdin × p) + (Izdo × q) ≤ The maximum value of transmission cable supply current	Ihin: Current consumption of the non-isolation input slave module/I/O combined slave module Iho: Current consumption of the non-isolation output slave module Izdin: Current consumption of the isolation input slave module/I/O combined slave module Izdo: Current consumption of the isolation output slave module m: Number of connected non-isolation input slave modules/I/O combined slave modules n: Number of connected non-isolation output slave modules p: Number of connected isolation input slave modules/I/O combined slave modules q: Number of connected isolation output slave modules
Condition 2	Vm(V) - ΔV(V) ≥ 20 V	Vm: Supply voltage for the FX5-ASL-M ΔV: Cable-to-cable voltage drop
Condition 3	Vm(V) - ΔV(V) ≥ The lowest allowable voltage of the connected load	

Description of condition 1

■Constants related to the non-isolation slave module (Ihin, Iho)

In the non-isolation slave module, the current required for the internal control circuit and the connected load is supplied with transmission cables (DP, DN).

■Ihin(A): Current consumption of the non-isolation input slave module/I/O combined slave module

= Current consumption of the non-isolation input slave module/I/O combined slave module + Current consumption of connected load (three-wire sensor) × Number of points

■Iho(A): Current consumption of the non-isolation output slave module

= Current consumption of the non-isolation output slave module + Current consumption of connected load × Number of points

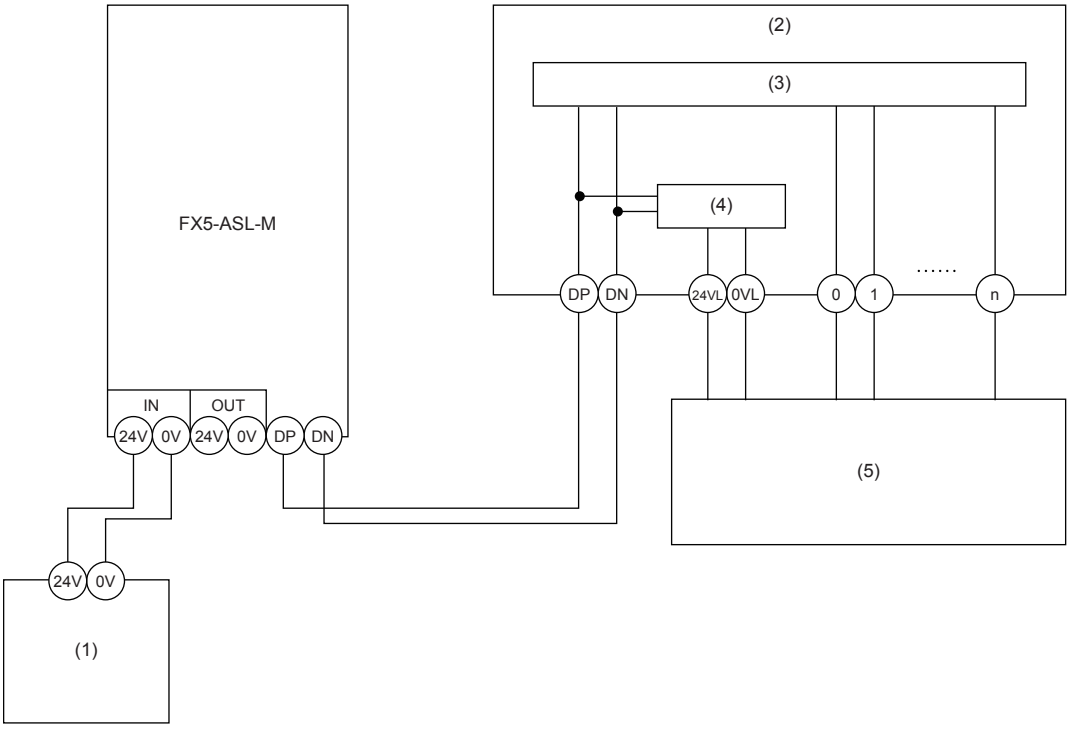

(1) 24 V DC external power supply
(2) Non-isolation slave module
(3) Internal control circuit
(4) Power supply generation
(5) Connected load

Point

- The 24VL and 0VL terminals of a slave module are used to supply the power to the connected load.
- For the current consumption of a non-isolation slave module, refer to the manual for the slave module used.

■Constants related to the isolation slave module (Izdin, Izdo)

In the isolation slave module, only the current required for the internal control circuit is supplied with the transmission cables (DP, DN), whereas that for the connected load is supplied from the power cables (24V, 0V).

■Izdin(A): Current consumption of the isolation input slave module/I/O combined slave module

■Izdo(A): Current consumption of the isolation output slave module

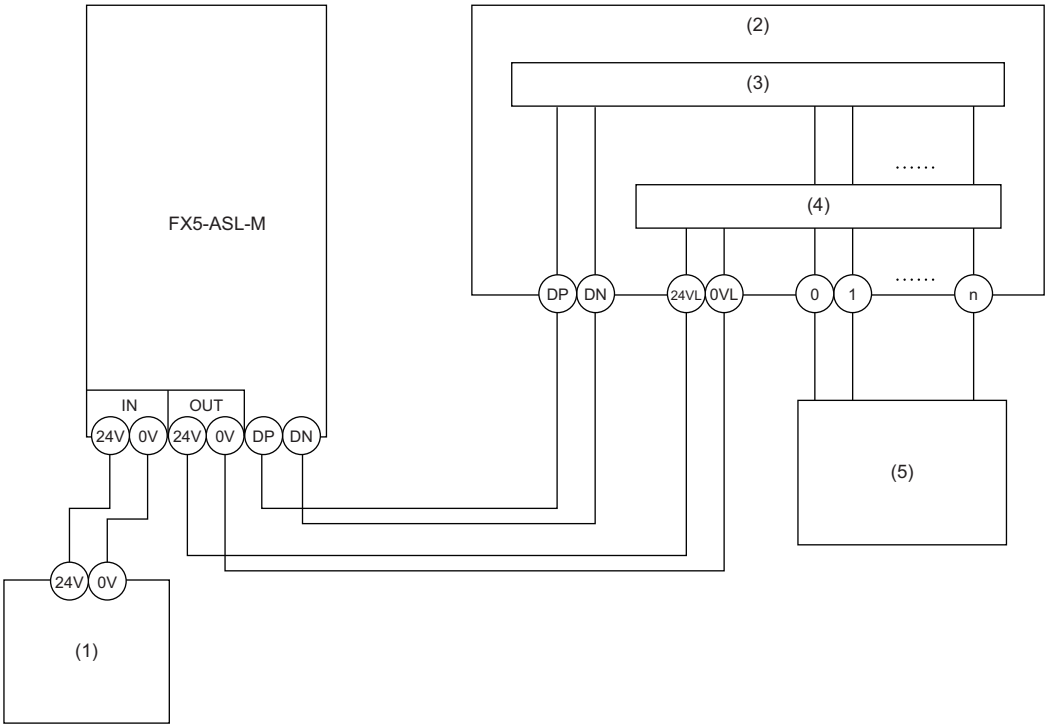

(1) 24 V DC external power supply
(2) Isolation slave module
(3) Internal control circuit
(4) Load driving circuit (photocoupler)
(5) Connected load

Point

- In isolation slave modules, the current consumption of the connected load is not subject to the current restriction condition for the AnyWireASLINK system.
- For the current consumption of isolation slave modules, refer to the manual for the slave module used.

■Transmission cable supply current (I(A))

The transmission cable supply current in the AnyWireASLINK system is determined by the following formula. (Number of connected modules: m, n, p, q)

I(A) = (Ihin × m) + (Iho × n) + (Izdin × p) + (Izdo × q)

■Maximum transmission cable supply current

For the maximum transmission cable supply current, refer to the following.

☞ Page 16 Power Supply Specifications

Description of conditions 2 and 3

■Vm: Supply voltage for the FX5-ASL-M

- Voltage: 21.6 to 27.6 V DC (24 V DC -10 to +15%), ripple voltage 0.5 Vp-p or lower
- Recommended voltage: 26.4 V DC (24 V DC +10%)

■ΔV(V): Cable-to-cable voltage drop

Calculation formula	Description
ΔV(V) = Transmission cable supply current I(A) × Cable resistance R (Ω)	■Transmission cable supply current (I(A)) ☞ Page 43 Transmission cable supply current (I(A)) ■Cable resistance R (Ω) = Cable length (m) × Conductor resistance (Ω/m) × 2 • Wire diameter 1.25 mm² → Conductor resistance 0.015 Ω/m • Wire diameter 0.75 mm² → Conductor resistance 0.025 Ω/m

Calculation example

The example shows how to check whether the total length of 100 m is sufficient to configure a system in the following conditions.

■Condition

Item		Description
Non-isolation slave module (Input ASLINKER)	Number of I/O points	2 points
	Module current consumption	15 mA
	Number of modules	24
Connected load (three-wire sensor)	Three-wire sensor current consumption	13 mA
	Number of sensors	2
	Power supply voltage	24 V DC ±10%
Transmission cable (DP, DN)	Wire diameter	1.25 mm²
Supply voltage for the FX5-ASL-M	Power supply voltage	24 V DC

■Calculation result

Item	Calculation formula	Result
Condition 1	I(A) = (Ihin × m) = I(A) ≤ The maximum transmission cable supply current ⇨ (0.015 + (0.013 × 2)) × 24 = 0.984 A ≤ 1 A	Satisfied
Condition 2	Vm(V) - ΔV(V) ≥ 20 V ⇨ 24 - (0.984 × 100 × 0.015 × 2) = 24 - 2.95 = 21.05 V ≥ 20 V	Satisfied
Condition 3	Vm(V) - ΔV(V) ≥ The lowest allowable voltage of the connected load ⇨ The lowest limit of the allowable voltage range for connected load = 24 - 24 × 0.1 = 21.6V ⇨ 21.05 V < 21.6 V	Not satisfied

The calculation results of the conditions 1) to 3) show that the system cannot be configured.
However, the system can be configured if the power supply for the FX5-ASL-M is changed to 24.55 V DC or higher.

6 WIRING

This chapter describes the wiring of the FX5-ASL-M.

6.1 Terminal Block

Type of the terminal block

The following terminal block is used in the FX5-ASL-M.

Name	Model	Contact
Transmission cable terminal block	FMC1,5/7-STF-3,81	PHOENIX CONTACT GmbH & Co. KG

Tightening torque

Tighten terminal block screws within the following tightening torque range.

Screws tightened	Tightening torque range
Terminal block mounting screw	0.2 to 0.3 N·m

To connect the terminal block, a flathead screwdriver having a tipped size of 0.4×2.5 mm is required.

Before removing the transmission cable terminal block, check that the terminal block mounting screws on both sides are completely loosened (removed from the socket).

Pulling with excessive force while the terminal block mounting screws on the both sides are still tightened may damage the device.

Before tightening, check that there are no short circuits due to disconnected or frayed wires. Then tighten the terminal block mounting screws on both sides securely.

Signal name of the terminal block

The following shows the signal names of the terminal block.

Terminal block	Signal name		Description
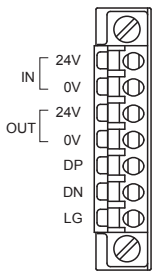	IN	24V	Power supply terminals for driving the transmission circuit of the AnyWireASLINK system and for a slave module. Connect to a 24 V DC external power supply.
		0V	
	OUT	24V	Terminals for connecting isolation (4-wire) slave modules. If the modules are connected to these terminals, supplying power for each module from the 24 V DC external power supply is not necessary.
		0V	
	DP		AnyWireASLINK transmission signal terminals DP: Transmission cable (+), DN: Transmission cable (-) Connect to the DP and DN terminals on the slave module or terminating unit.
	DN		
	LG		Connected to the neutral point of the noise filter inserted between the 24V and 0V terminals. Ground the LG terminal with the functional ground terminal (FG terminal) on the programmable controller at a single point.

6.2 Wiring Method

This section describes the wiring to the transmission cable terminal block of the FX5-ASL-M.

Wiring to the transmission cable terminal block

■Connecting a cable

Insert a cable with a wire ferrule into a wire insertion opening and fully push the cable. Then, pull the cable slightly to check that it is clamped securely.

■Disconnecting a cable

Hold down the open/close button of a cable to disconnect with a flathead screwdriver. Pull out the cable with the open/close button held down.

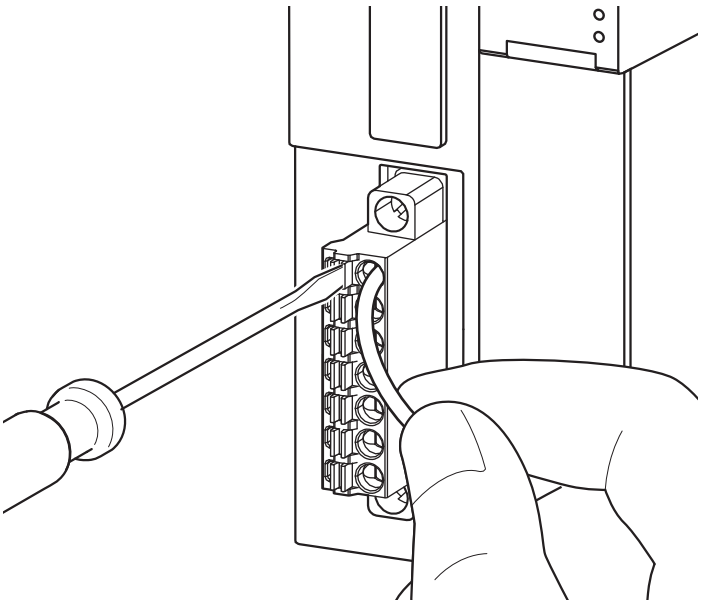

6.3 Wiring Product

Applicable wires and cables

Use the following wires or cables connected to the transmission cable terminal block.

Classification	Name	Wire size	Temperature rating
Transmission cable (DP, DN)	UL-listed general-purpose 2-wire cable (VCTF, VCT)	1.25 mm²	70℃ or higher
		0.75 mm²	
	UL-listed general-purpose wire	1.25 mm²	
		0.75 mm²	
	Dedicated flat cable	1.25 mm²	90℃
		0.75 mm²	
Power supply cable (24V, 0V)	UL-listed general-purpose 2-wire cable (VCTF, VCT)	0.75 mm² to 2.0 mm²	70℃ or higher
	UL-listed general-purpose wire	0.75 mm² to 2.0 mm²	
	Dedicated flat cable	1.25 mm²	90℃
		0.75 mm²	

Wire ferrule

Bare cables can be connected to the transmission cable terminal block; however, for safety reasons, it is recommended to connect wire ferrules.

Use UL-listed wire ferrules and, for processing, use a tool recommended by their manufacturer.

Type	Model	Application	Contact
Wire ferrule	AI 0,75-10 GY	Processing of a 0.75 mm² wire	PHOENIX CONTACT GmbH & Co. KG
	AI 1,5-10	Processing of a 1.25 mm² wire	

6.4 Wiring Precautions

- Do not run multiple transmission cables (DP, DN) using a multicore cable.

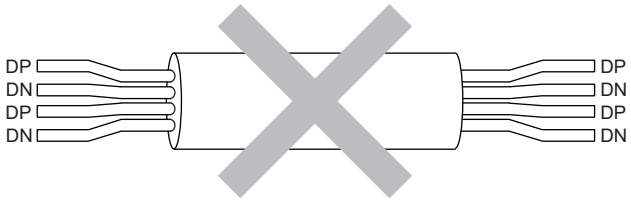

- The voltage should not fall below the lower limit of the allowable voltage range due to voltage drop caused by the cable. If the voltage falls below the lower limit, malfunctions may occur.
- Do not connect soldered cables directly to the terminals. Doing so may loosen the screws, resulting in a poor contact.
- In the AnyWireASLINK system, signals and power are supplied to a slave module with two transmission cables: DP and DN. Therefore, use a stranded wire of 1.25 mm² or larger as the main line.
- General-purpose wire, cabtyre cable and flat cable, etc. can be used.
- Use a crimping tool to connect a wire ferrule to a cable.
- Before inserting a wire ferrule, check the shapes of the wire insertion opening and wire ferrule. Then, insert the terminal in the correct orientation. A wire ferrule wider than the wire insertion opening may damage the terminal block. (☞ Page 47 Wire ferrule)
- Signal names are not printed on the transmission cable terminal block. To avoid incorrect wiring, wire cables to the terminal block attached to the FX5-ASL-M.
- Do not insert multiple wire ferrules into one wire insertion opening. Doing so may cause damage on the terminal block or cable, or malfunction.

6.5 Power Supply/grounding Wiring

Power supply/grounding wiring

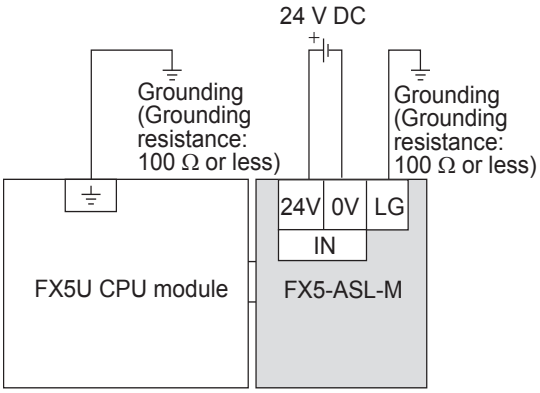

Grounding

Perform the following.

- Perform class D grounding. (Grounding resistance: 100 Ω or less)
- Ground the PLC independently if possible.
- If the PLC cannot be grounded independently, perform the "Shared grounding" shown below.

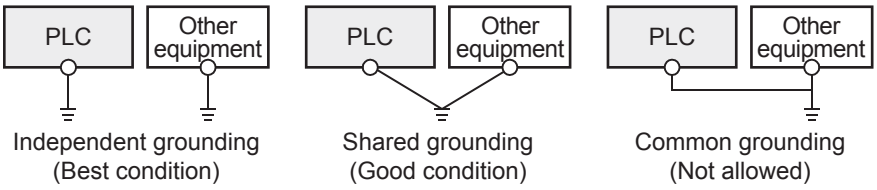

- Bring the grounding point close to the PLC as much as possible so that the ground cable can be shortened.

6.6 Connecting Slave Module or Terminating Unit

Connection type

- The maximum transmission distance in an AnyWireASLINK stand-alone system is 200 m, which is the overall cable distance including the main line and branch line. (It varies depending on the wire diameter of the transmission cables (DP, DN) or the transmission cable supply current.)
- AnyWireASLINK systems support tree branch connection, T-branch connection, and multidrop connection.
- Up to 128 slave modules can be connected.

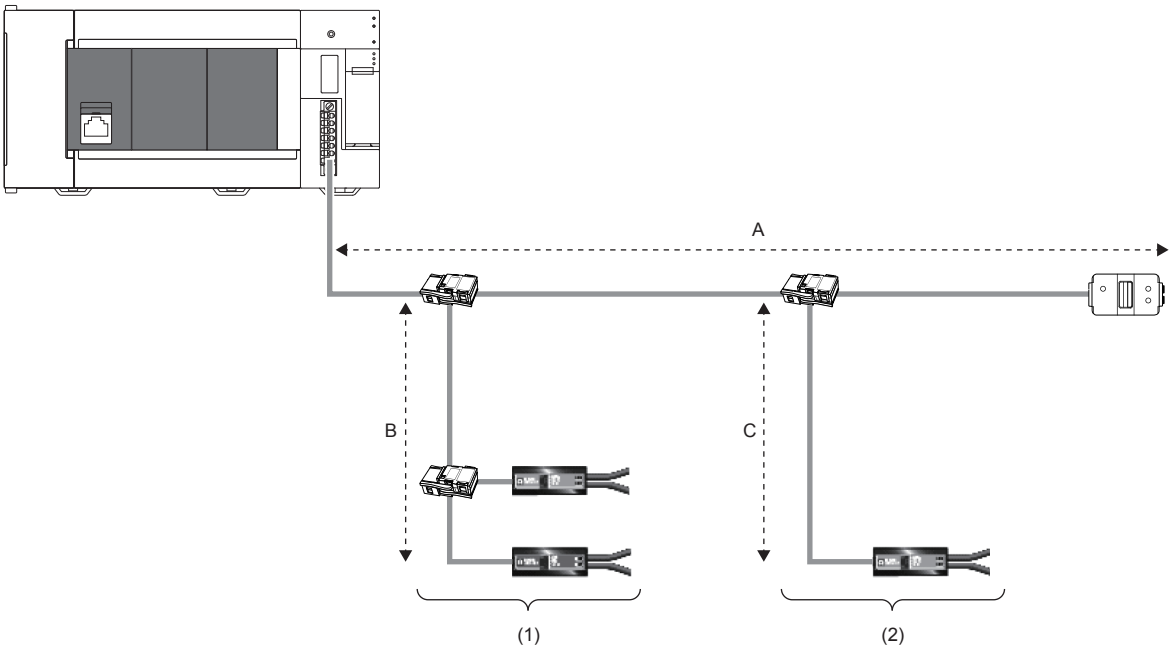

(1) Tree branch connection
(2) T-branch connection

Point

The total length of the transmission distance for the AnyWireASLINK system can be calculated from A + B + C.
Note that the total length should not exceed the maximum transmission distance or the total length set for the system to branch lines.

Terminating unit

To ensure more stable transmission quality, connect a terminating unit to the end of a transmission cable (DP, DN).

■Terminating unit connection

Connect at least one terminating unit for one AnyWireASLINK line. Connect it at the farthest end from the FX5-ASL-M.

■Branch of transmission cables (DP, DN)

Connect one terminating unit at the end of a branch line that exceeds 40m.

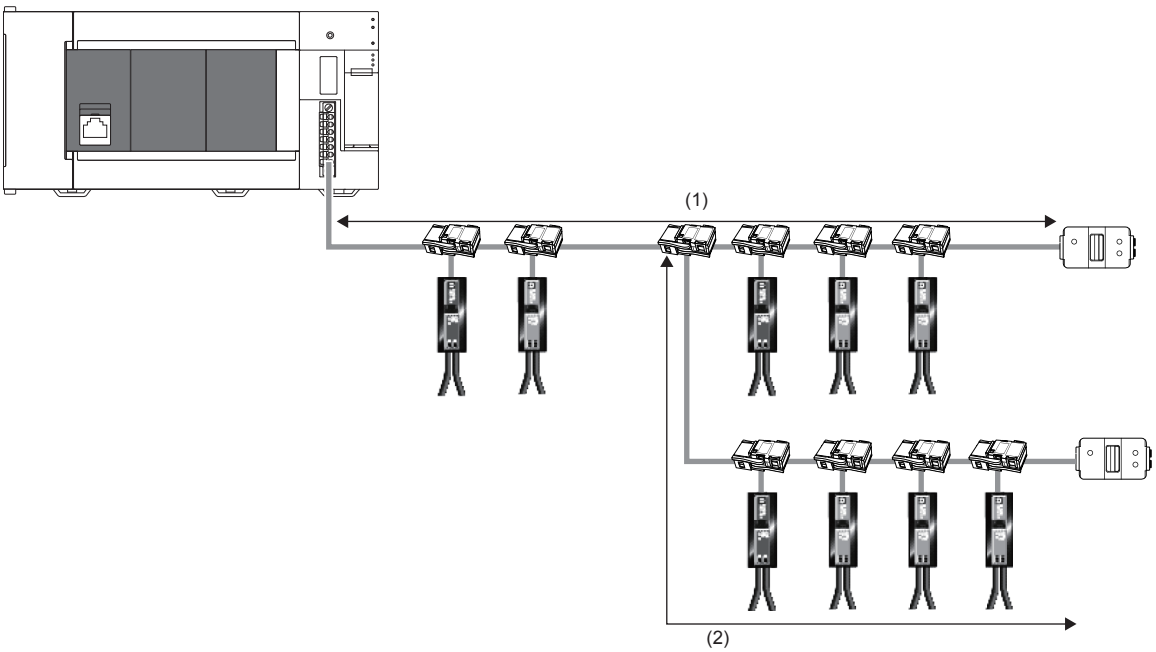

(1) Main line
(2) 40 m or longer branch line

7 PARAMETER SETTINGS

This chapter describes the parameter setting required for the FX5-ASL-M.

7.1 Parameter Setting Procedure

1. Add the FX5-ASL-M to GX Works3.

[Navigation window] ⇨ [Parameter] ⇨ [Module Information] ⇨ Right click ⇨ [Add New Module]

2. The parameter setting includes a basic setting and refresh setting. Select the settings in the tree and set the items in the following window.

[Navigation window] ⇨ [Parameter] ⇨ [Module Information] ⇨ [FX5-ASL-M] ⇨ [Module Parameter]

3. Write the setting to the CPU module with GX Works3.

[Online] ⇨ [Write to PLC]

4. Reset the CPU module or power off and on the system to apply the setting.

7.2 Basic Setting

Set the number of transmission points of the FX5-ASL-M and others.

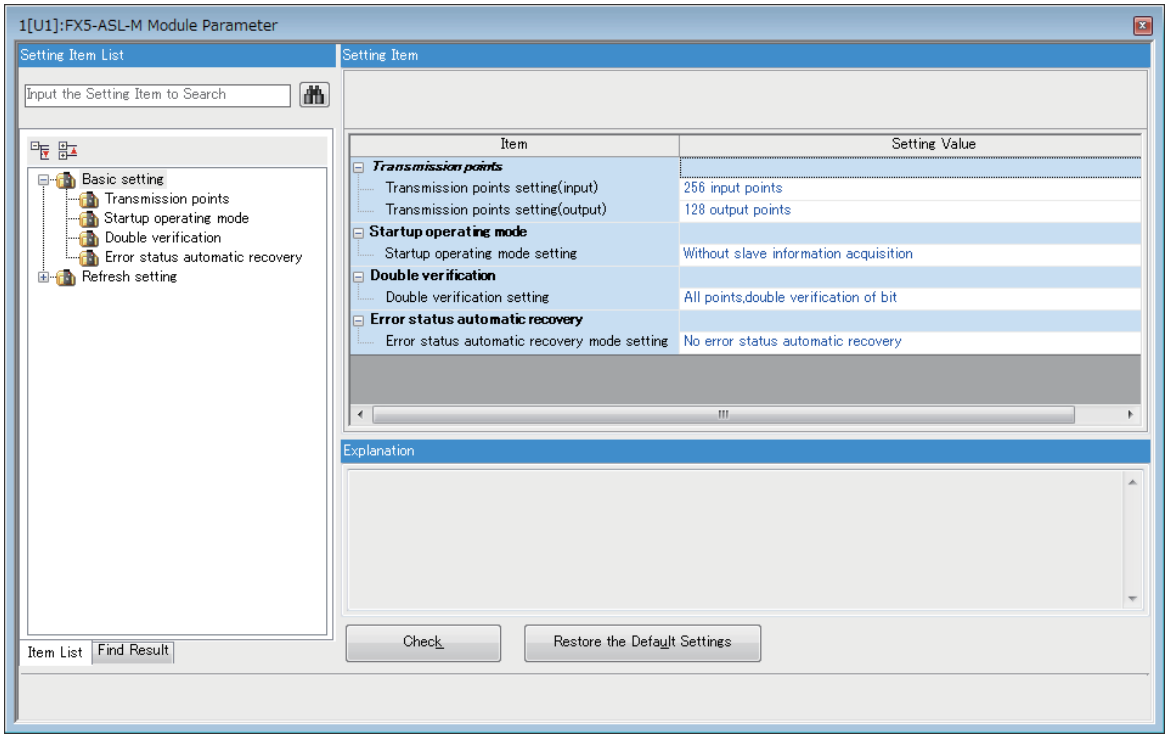

Transmission points

Set the number of transmission points of AnyWireASLINK.

Item	Description	Setting range
Transmission points setting (IN)	Set the number of input transmission points. One transmission cycle time is determined by setting the number of transmission points. (☞ Page 85 Transmission cycle time)	• 0 input points • 8 input points • 16 input points • 24 input points • 32 input points • 48 input points • 64 input points • 80 input points • 96 input points • 128 input points • 160 input points • 192 input points • 224 input points • 256 input points (Default: 256 input points)
Transmission points setting (OUT)	Set the number of output transmission points. One transmission cycle time is determined by setting the number of transmission points. (☞ Page 85 Transmission cycle time)	• 0 output points • 8 output points • 16 output points • 24 output points • 32 output points • 48 output points • 64 output points • 80 output points • 96 output points • 128 output points • 160 output points • 192 output points • 224 output points • 256 output points (Default: 128 output points)

Startup operating mode

Set whether to read the parameters of slave modules at start-up of the FX5-ASL-M.

Item	Description	Setting range
Startup operating mode setting	Set the operation mode at start-up. (☞ Page 34 Slave Information Acquisition at Start-up Function)	• Without slave information acquisition • Get slave information acquisition (Default: Without slave information acquisition)

Double verification

Set the double verification of the FX5-ASL-M.

Item	Description	Setting range
Double verification mode setting	Set the double verification mode. (☞ Page 24 Double Verification)	• All points, double verification of bit • Double verification of word (16 bit), until 1st word*1 • All points, double verification of word (16 bit) (Default: All points, double verification of bit)

*1 The word double verification be selected from until 1st word up to until 15th word.

Error status automatic recovery

Set whether to automatically recover the FX5-ASL-M from the error status.

Item	Description	Setting range
Error status automatic recovery mode setting	Set the error status automatic recovery mode. (☞ Page 34 Error Status Automatic Recovery Function)	• No error status automatic recovery • Error status automatic recovery (Default: No error status automatic recovery)

7.3 Refresh Setting

Setting method

Set buffer memory areas of the FX5-ASL-M to refresh.

This refresh setting eliminates the needs for reading or writing with a program.

1. Start a module parameter.

[Navigation window] ⇨ [Parameter] ⇨ [Module Information] ⇨ [FX5-ASL-M] ⇨ [Module Parameter] ⇨ [Refresh Setting]

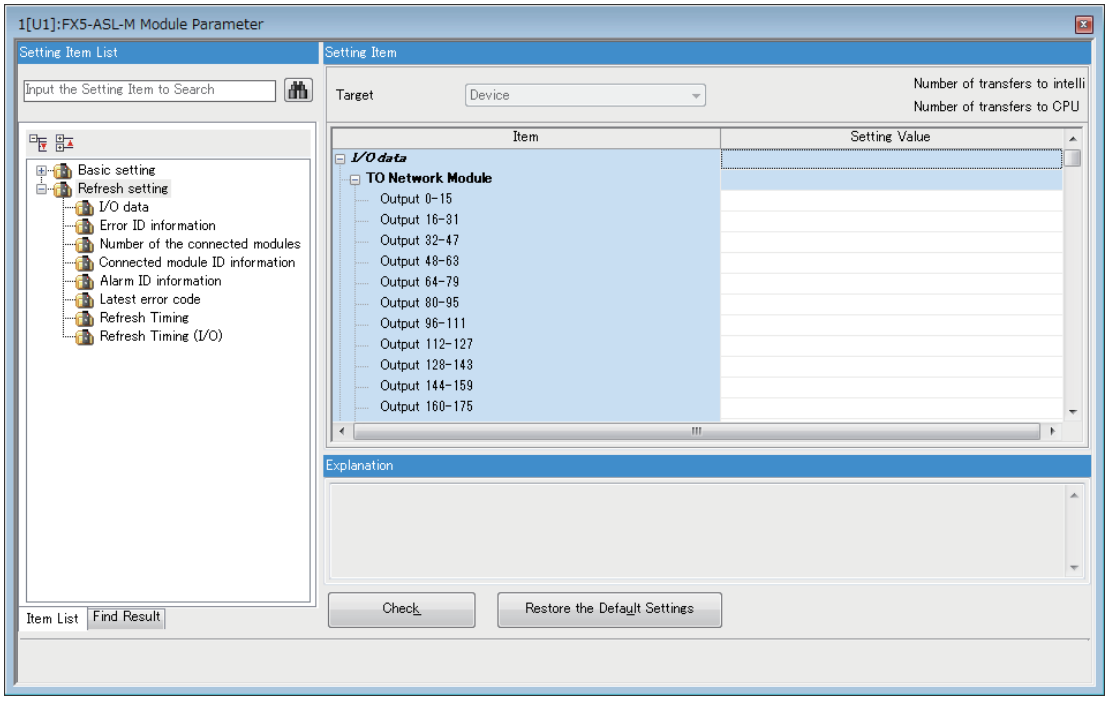

2. Click "Target" and set a refresh target.

Double-click the item to set and enter a refresh target device.

Point

If refreshing is enabled, the buffer memory areas are overwritten with the values of the refresh targets.
To change the values of the buffer memory areas to be refreshed, create a program that modifies device values of the refresh targets.

7.4 Slave Module Address Setting

Setting a start number of the address assigned for data communication is required for slave modules.
An address can be written to a slave module or the address assigned to a slave module can be read through infrared communications using an address writer (manufactured by Anywire Corporation).
For details, refer to the manual of the address writer.

■ Image of address read/write

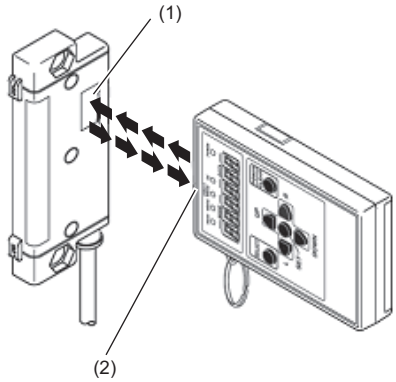

(1) Address setting port
(2) Light projecting/receiving part

Address setting example

When 0 is set for the 2-point input slave module address, and 0 and 2 for the 2-point output slave module address, bits are occupied as follows.

■Buffer memory address of the input slave module

Buffer memory address	Bit No.															
	15	14	13	12	11	10	9	8	7	6	5	4	3	2	1	0
Un\G0	15	14	13	12	11	10	9	8	7	6	5	4	3	2	1	0

- Areas occupied by address 0: Un\G0.0, Un\G0.1

■Buffer memory address of the output slave module

Buffer memory address	Bit No.															
	15	14	13	12	11	10	9	8	7	6	5	4	3	2	1	0
Un\G4096	15	14	13	12	11	10	9	8	7	6	5	4	3	2	1	0

- Areas occupied by address 0: Un\G4096.0, Un\G4096.1
- Areas occupied by address 2: Un\G4096.2, Un\G4096.3

Precautions

- A slave module address is not deleted even when the power supply of a programmable controller or a 24 V DC external power supply is turned off. The address is retained until a new address is set when a system is configured.
- In the address setting, ensure that the address occupied by the slave module does not exceed the number of transmission points set in the FX5-ASL-M. For the operation mode setting of the FX5-ASL-M, refer to the following.

☞ Page 52 Transmission points

- In the slave module, a value between 0 and 254 can be written. (This value is not an ID.) Note that 255 cannot be set. Doing so will cause a No ID setting error.

Model	Address	ID
Output slave module	0 to 254	0 to 254 (0000H to 00FEH)
Input slave module or I/O combined slave module	0 to 254	512 to 766 (0200H to 02FEH)

7.5 Automatic Address Detection Function

Automatic address detection refers to a function that stores the IDs (addresses) of the connected slave modules in the EEPROM of the FX5-ASL-M.
Pressing the SET switch on the FX5-ASL-M enables this function and enables the FX5-ASL-M to detect and store IDs (addresses) of connected slave modules.
The ID (address) information stored in the EEPROM is held even when the power is turned off. However, information about unset IDs, the same IDs, and the parameter information of each slave module are not held.
Whenever starting the system or changing the system configuration, set the correct addresses to all the slave modules and execute the automatic address detection.

Executing the automatic address detection

To execute the automatic address detection, use the SET switch or 'Automatic address detection command' (Un/G27 b1).

Using the SET switch

1. Check that all of the slave modules are operating normally.
2. Keep pressing the SET switch on the FX5-ASL-M until the SET LED turns on.

At this time, 'Automatic address detection flag' (Un\G28 b11) turns on.

3. When the SET LED flashes for a while and turns off, the ID (address) has been stored.
4. When 'Automatic address detection flag' (Un\G28 b11) turns off, the automatic address detection is completed.

Using 'Automatic address detection command' (Un\G27 b1)

1. Check that all of the slave modules are operating normally.
2. Turn on and off 'Automatic address detection command' (Un\G27 b1).

At this time, 'Automatic address detection flag' (Un\G28 b11) turns on.

3. When the SET LED flashes for a while and turns off, the ID (address) has been stored.
4. When 'Automatic address detection flag' (Un\G28 b11) turns off, the automatic address detection is completed.

Precautions

■Situations in which automatic address detection cannot be executed

Automatic address detection cannot be executed in the following cases.

- When an error occurs in the AnyWireASLINK system (Example: Short circuit, 24 V DC external power supply voltage drop)
- Within approximately five seconds after the AnyWireASLINK system is powered on or CPU module reset recovery
- When automatic address detection is in progress (While 'Automatic address detection flag' (Un\G28 b11) is on)
- When the same address used check is in progress (While 'Overlap address inspection flag' (Un\G28 b12) is on)
- When the parameter access is in progress (While 'Parameter access request command for the slave module' (Un\G27 b8), 'Parameter batch read command for the slave module' (Un\G27 b9), or 'Parameter batch write command for the slave module' (Un\G27 b10) is on)
- When any of the following errors has occurred

Error code	Error description
0CC8H	Transmission cable voltage drop error
0CC9H	DP/DN short error
0CCBH	24V/DP short error
1867H	FX5-ASL-M hardware failure
3064H	
3065H	
3066H	

■Situations in which automatic address detection is required

Execute automatic address detection in the following cases.

- When starting the system operation (when all of the slave modules are connected and operating normally)
- When adding a slave module after starting the system operation
- When removing a slave module after starting the system operation
- When changing the address of a slave module after starting the system operation

■Check after execution of automatic address detection

After executing automatic address detection, check that there is no inconsistency between the actual system configuration and the IDs registered in the FX5-ASL-M, referring to the value stored in 'Number of the IDs of the connected modules' (Un\G9216) and values stored in 'Connected module ID information storage area' (Un\G9217 to Un\G9344).

■Executing automatic address detection again

Use an address writer to set the ID (address) in a slave module that has the same ID as other slave modules or where an ID is not set. Then execute automatic address detection again.

■When non-processing is executed even after automatic address detection is executed

Do not execute automatic address detection in any of the following cases. Automatic address detection is not processed if executed.

- When 'Parameter access completion flag' (Un\G28 b9) is off
- When 'Automatic address detection flag' (Un\G28 b11) is on

Create an interlock program to ensure proper execution of automatic address detection.

For the interlock program of automatic address detection, refer to the following.

☞ Page 59 Interlock program of automatic address detection

Automatic address detection execution timing

The following shows automatic address detection execution timing.

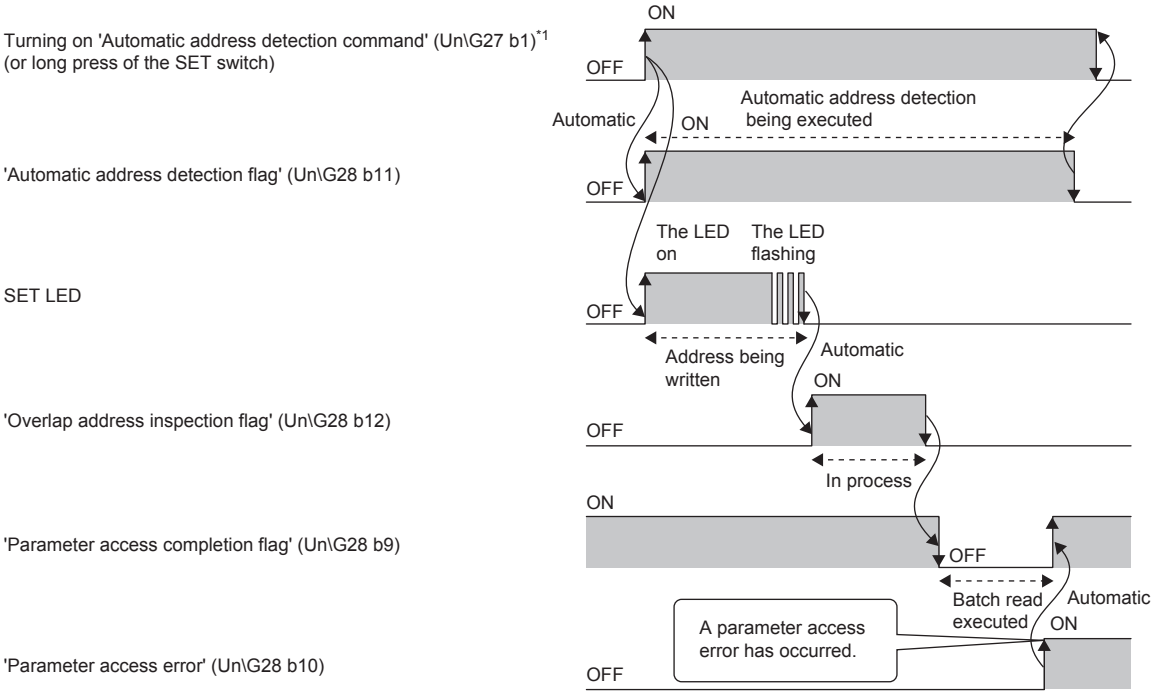

*1 After turning on 'Automatic address detection command' (Un\G27 b1), check that 'Automatic address detection flag' (Un\G28 b11) is on or check the SET LED status. Then, turn off 'Automatic address detection command' (Un\G27 b1) with a program.

7.6 Automatic Reading of the System Configuration

Man-hours for the parameter setting can be reduced by automatically reading the information of the slave modules connected in the AnyWireASLINK system.

[Navigation window] ⇨ [Parameter] ⇨ [Module Information] ⇨ [FX5-ASL-M] ⇨ [AnyWireASLINK Configuration]

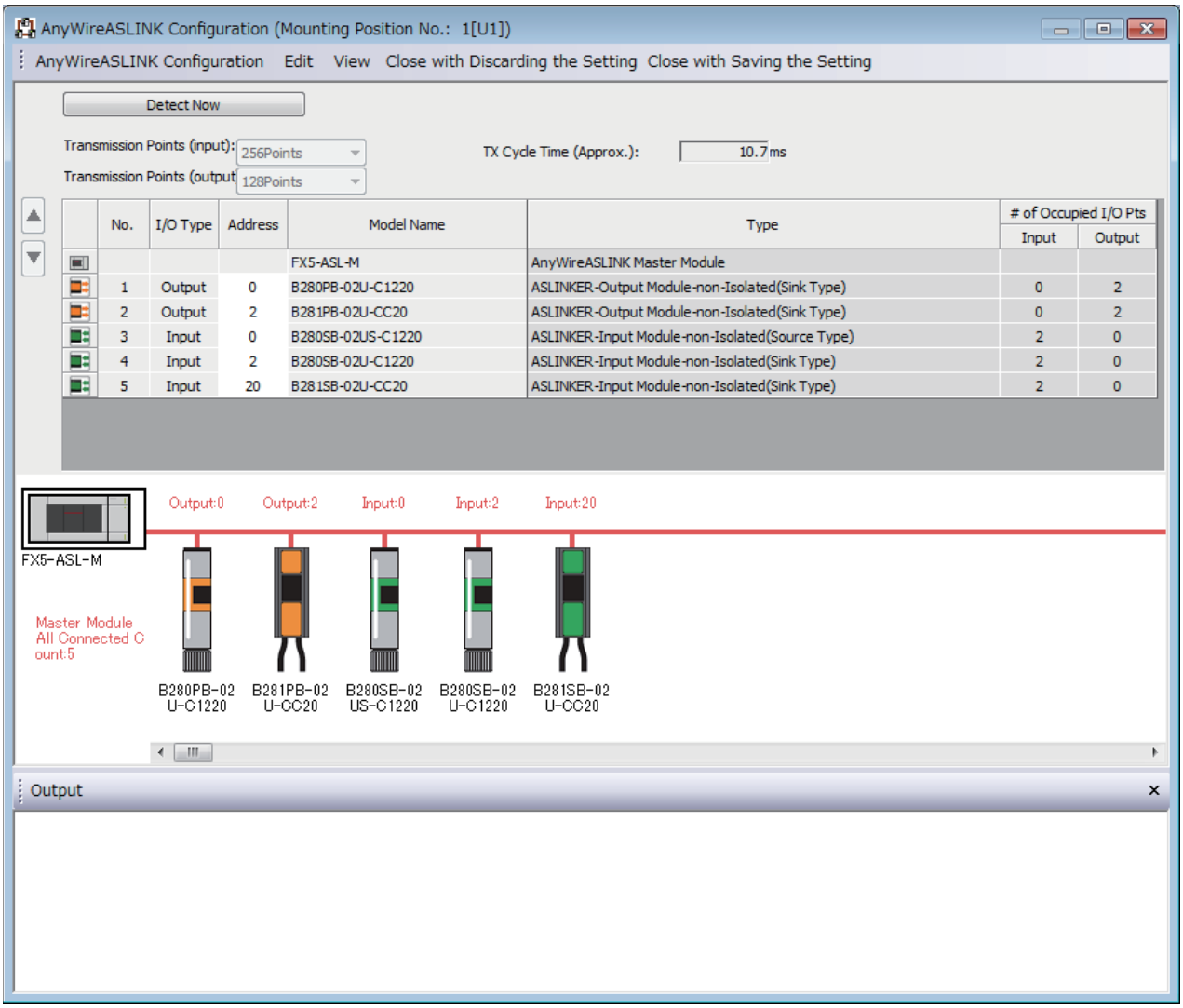

For the "AnyWireASLINK Configuration" window, refer to the following.

iQ Sensor Solution Reference Manual

8 PROGRAMMING

This chapter describes programming and start-up examples of the FX5-ASL-M.

8.1 Precautions on Programming

This section describes precautions on programming on the FX5-ASL-M.

Interlock program of automatic address detection

The interlock program described here prevents 'Automatic address detection command' (Un\G27 b1) from being turned on during a parameter access*1 or during automatic address detection*1, allowing proper automatic address detection.

The following shows an interlock program in which the start module number of the FX5-ASL-M is assigned to 0001H.

*1 Indicates that 'Parameter access completion flag' (Un\G28 b9) is off or 'Automatic address detection flag' (Un\G28 b11) is on.

Ex.

Interlock example

Classification	Label name	Description	Device
Module label	FX5ASLM_1.bModuleREADY_D	Module READY	U1\G28 b0
	FX5ASLM_1.bDP_DNShortError_D	DP/DN short error	U1\G28 b1
	FX5ASLM_1.b24V_DPShortError_D	24V/DP short error	U1\G28 b2
	FX5ASLM_1.bTransmissionCableVoltageDdropError_D	Transmission cable voltage drop error	U1\G28 b3
	FX5ASLM_1.bPalameterAccessCompletionFlag_D	Parameter access completion flag	U1\G28 b9
	FX5ASLM_1.bAutomaticAddressDetectionFlag_D	Automatic address detection flag	U1\G28 b11
	FX5ASLM_1.bOverlapAddressInspectionFlag_D	Overlap address inspection flag	U1\G28 b12
	FX5ASLM_1.bAutomaticAdrressDetectionCommand_D	Automatic address detection command	U1\G27 b1
Label to be defined	Define global labels as shown below:		

	Label Name	Data Type		Class	Assign (Device/Label)
1	InterlockStart	Bit	...	VAR_GLOBAL	M0

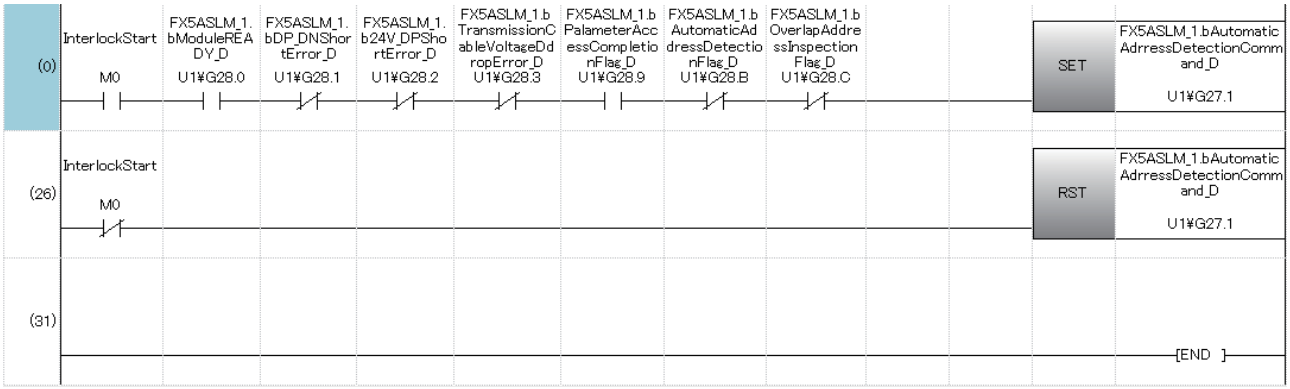

8.2 Communication of FX5-ASL-M with Slave Module

The input signals of the input ASLINKER, stored in 'Input information area' (Un\G0 to Un\G15) of the FX5-ASL-M, are batch-transferred to the device data of the CPU module.
Moreover, the device data of the CPU module is batch-transferred to 'Output information area' (Un\G4096 to Un\G4111) of the FX5-ASL-M, and the output signals are transmitted to the output ASLINKER.

System configuration example

System configuration

The following system configuration is used to explain communication between the FX5-ASL-M and slave modules.

- CPU module: FX5U CPU module
- AnyWireASLINK system master module: FX5-ASL-M (Module number: 1H)

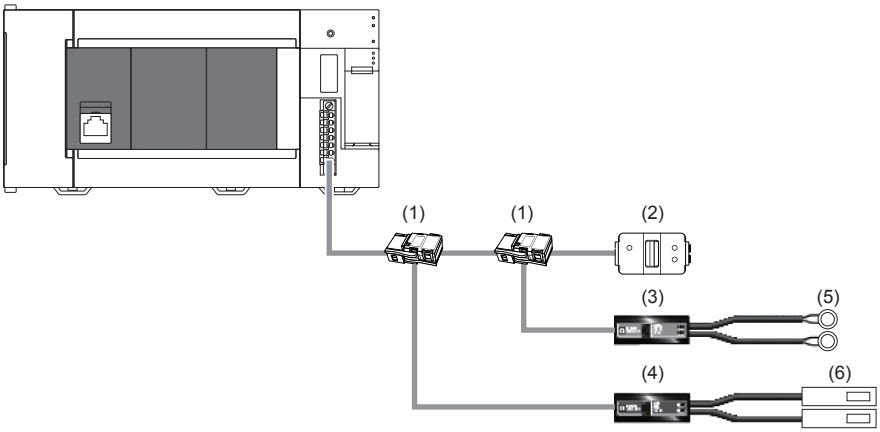

(1) Link connector
(2) Terminating unit
(3) 2-point output ASLINKER
(4) 2-point input ASLINKER
(5) LED
(6) Sensor switch

Correlations between devices

The following shows the correlations between devices.

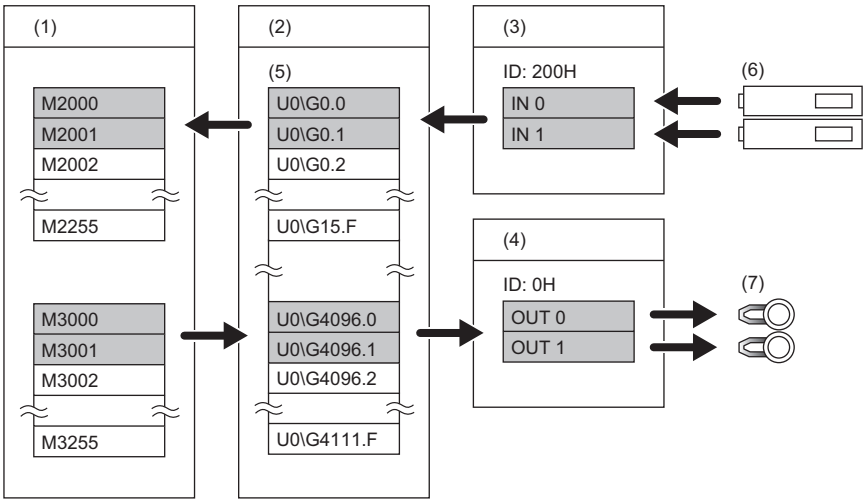

(1) CPU module
(2) FX5-ASL-M
(3) Input ASLINKER: Address 0
(4) Output ASLINKER: Address 0
(5) Buffer memory
(6) Sensor switch
(7) LED

FX5-ASL-M setting

Connect GX Works3 to the CPU module and set parameters.

1. Set the CPU module as follows.

[Project] ⇨ [New]

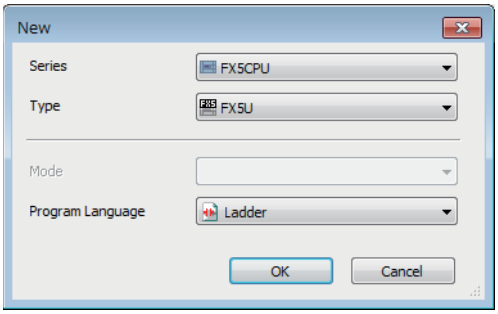

2. Click the [OK] button to add the module labels of the CPU module.

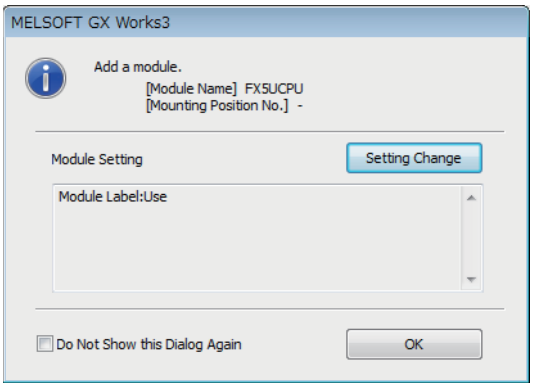

3. Set the FX5-ASL-M as follows.

[Navigation window] ⇨ [Parameter] ⇨ [Module Information] ⇨ Right-click ⇨ [Add New Module]

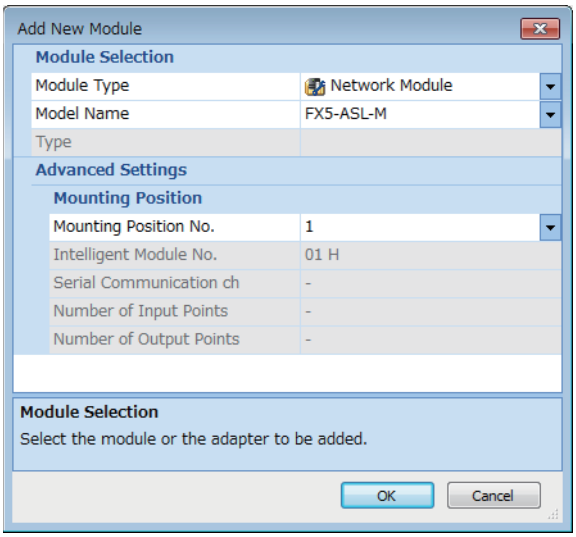

4. Click the [OK] button to add the module labels of the FX5-ASL-M.

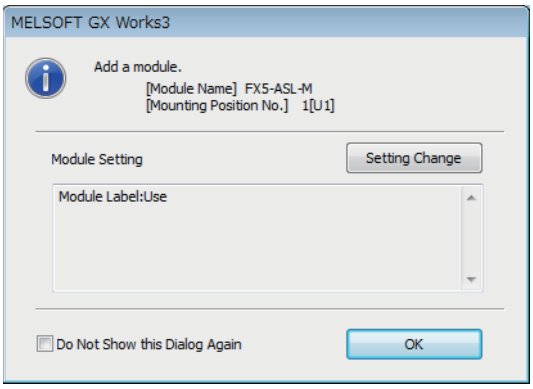

5. Set the items in "Basic setting" as follows.

[Navigation window] ⇨ [Parameter] ⇨ [Module Information] ⇨ [FX5-ASL-M] ⇨ [Module Parameter] ⇨ [Basic Settings]

Item	Setting Value
Transmission points	
Transmission points setting(input)	256 input points
Transmission points setting(output)	128 output points
Startup operating mode	
Startup operating mode setting	Without slave information acquisition
Double verification	
Double verification setting	All points,double verification of bit
Error status automatic recovery	
Error status automatic recovery mode setting	No error status automatic recovery

6. Write the set parameters into the CPU module, and reset the CPU module or power off and on the system.

[Online] ⇨ [Write to PLC]

Point

In this example, default values were used for parameters that are not shown above.

Settings of the slave module

Write addresses to slave modules to register the FX5-ASL-M.

Address setting

Write addresses to slave modules with an address writer.

- Output ASLINKER: Address 0 (ID: 0000H)
- Input ASLINKER: Address 0 (ID: 0200H)

Automatic address detection

Keep pressing the SET switch on the FX5-ASL-M until the SET LED turns on.

When the SET LED flashes and then turns off, it indicates that the registration of IDs (addresses) has been completed.

Checking the system status

Check whether the FX5-ASL-M can communicate with the slave modules normally.

The following LED statuses indicate that the communication is established normally.

- LED of the FX5-ASL-M

LED	Status
POWER	On
RUN	On
ERROR	Off
LINK	Flashing
SET	Off
ALM	Off

- LED of the ASLINKER

LED	Status
LINK LED	Flashing
Other than the LINK LED	Off

Program example

Classification	Label name	Description	Device
Module label	FX5ASLM_1.bModuleREADY_D	Module READY	U1\G28 b0
	FX5ASLM_1.bDP_DNShortError_D	DP/DN short error	U1\G28 b1
	FX5ASLM_1.b24V_DPShortError_D	24V/DP short error	U1\G28 b2
	FX5ASLM_1.bTransmissionCableVoltageDdropError_D	Transmission cable voltage drop error	U1\G28 b3
	FX5ASLM_1.bDP_DNDisconnectionError_D	DP/DN disconnection error	U1\G28 b4
	FX5ASLM_1.uInputInformationArea0_15_D	Input information area	U1\G0
	FX5ASLM_1.uOutputInformationArea0_15_D	Output information area	U1\G4096
Label to be defined	Define the global label as follows.		

	Label Name	Data Type		Class	Assign (Device/Label)
1	TimerContact	Timer	...	VAR_GLOBAL	T0
2	ProgramStart	Bit	...	VAR_GLOBAL	M1
3	InputArea	Word [Unsigned]/Bit String [16-bit]	...	VAR_GLOBAL	K4M1000
4	OutputArea	Word [Unsigned]/Bit String [16-bit]	...	VAR_GLOBAL	K4M2000

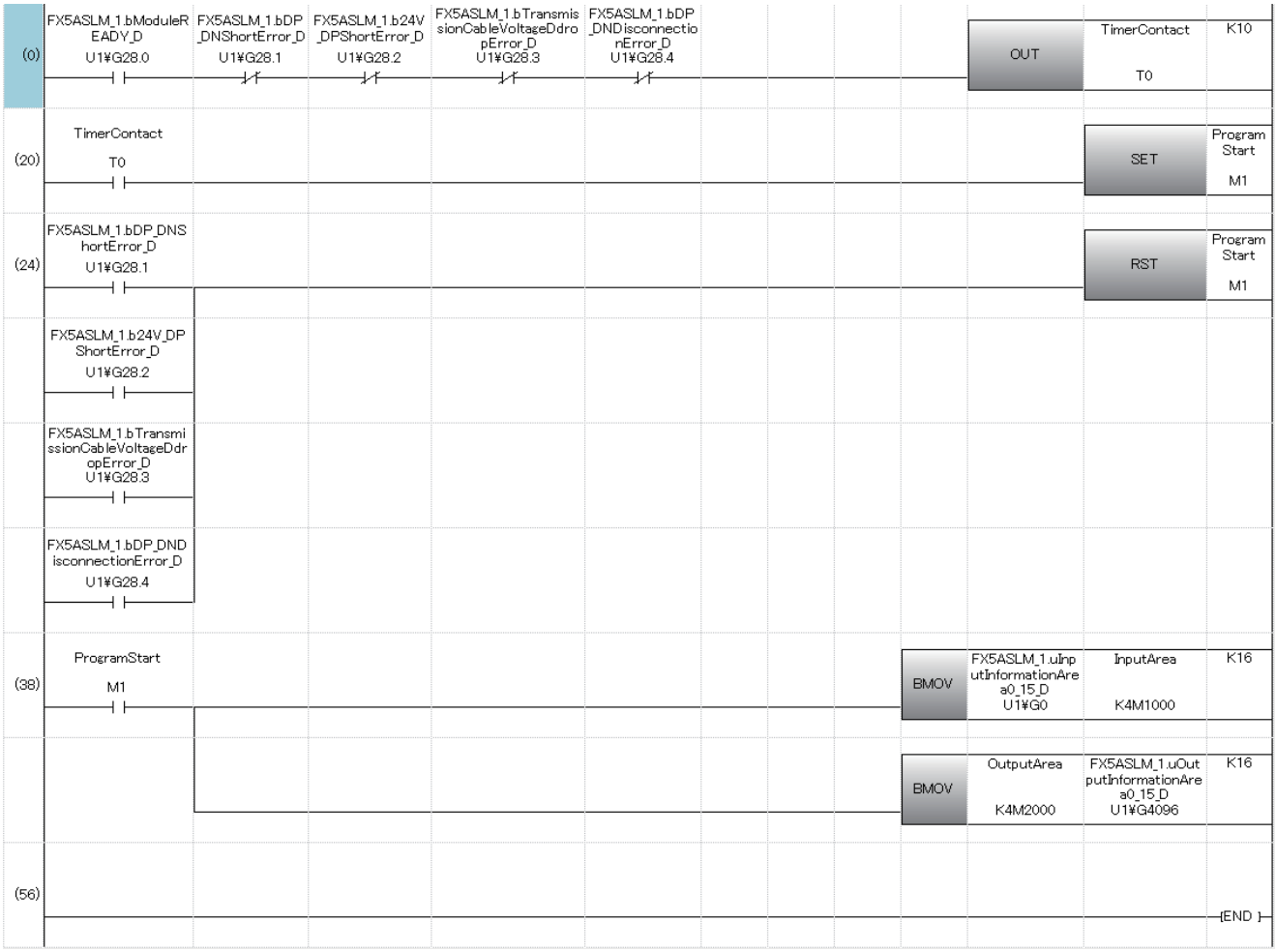

(38) When 'ProgramStart' (M1) is turned on, the values of 'Input information area' (U1\G0) are transferred to 'Input ASLINKER data storage area' (K4M1000).
The values of 'OutputArea' (K4M2000) are transferred to 'Output information area' (U1\G4096).

Point

After 'Module READY' (U1\G28 b0) turns on, wait at least one second and start the program.

9 TROUBLESHOOTING

This chapter describes troubleshooting of the FX5-ASL-M.

9.1 Checking with LED

This section describes troubleshooting using LED.

When the POWER LED turns off

When the POWER LED turns off after powering on the FX5-ASL-M, check the following.

Check item	Action
Is the FX5-ASL-M mounted correctly?	Securely mount the FX5-ASL-M on the CPU module.

When the RUN LED turns off

When the RUN LED turns off after powering on the FX5-ASL-M, check the following.

Check item	Action
Is the FX5-ASL-M mounted correctly?	Securely mount the FX5-ASL-M on the CPU module.

When the ERROR LED turns on

When the ERROR LED turns on, check the following.

Check item	Action
Does a programmable controller error occur in the GX Works3?	Confirm the details of the 'Latest error code storage area' (Un\G10256) with the GX Works3 buffer memory monitor, and process accordingly.

When the LINK LED turns on or off

When the LINK LED turns on or off, check the following.

Check item	Action
Does a programmable controller error occur in the GX Works3?	Confirm the details of the 'Latest error code storage area' (Un\G10256) with the GX Works3 buffer memory monitor, and process accordingly.

When the ALM LED is flashing at 0.2 second intervals

When the ALM LED is flashing at 0.2 second intervals, check the following.

Check item	Action
Is the power supply voltage of the 24 V DC external power supply within the rated value?	Adjust the power supply voltage of the 24 V DC external power supply within the rated value (21.6 to 27.6 V DC). (The recommended voltage is 26.4 V DC.)
Is any power cable short-circuited?	• Check that the power cables (24V, 0V) are not disconnected or short-circuited. • When crimping the link connector, check that the pin layout is correct.
Is the terminal block properly wired?	• Check that the 24 V DC external power supply is properly connected to the terminal blocks of the FX5-ASL-M and the slave module. • Check that there is no short circuit or incorrect wiring and screws are tightened sufficiently.

When the ALM LED is flashing at 1 second intervals

When the ALM LED is flashing at 1 second intervals, check the following.

Check item	Action
Is any transmission cable (between DP and DN, between 24V and DP, or between 0V and DP) short-circuited?	• Check that the transmission cables (between DP and DN, between 24V and DP, or between 0V and DP) are not short-circuited. • When crimping the link connector, check that the pin layout is correct.
Is the terminal block properly wired?	Check that the transmission cables (DP, DN) are not in contact with each other and that there is no incorrect wiring in the terminal block wiring of the FX5-ASL-M and the slave module.
Is the current consumption of the AnyWireASLINK system within the specified range?	Correct the cables (wire diameter, total length) and modules (type, the number of connected modules) so that the current consumption of all the slave modules does not exceed the transmission cable supply current of the FX5-ASL-M. (☞ Page 16 Power Supply Specifications)

When the ALM LED is on

When the ALM LED is on, check the following.

Check item	Action
Is any transmission cable (DP, DN) disconnected?	• Check that the transmission cables (DP, DN) are free from disconnection. • Check that the cables are crimped with proper pin layout using link connectors appropriate to the wire diameter.
Is the terminal block properly wired?	• Check that the transmission cables (DP, DN) and power cables (24V, 0V) are properly connected to the terminal block of the FX5-ASL-M. • Check that there is no incorrect wiring and that screws are tightened sufficiently.
Has the automatic address detection been executed?	When creating a new system, adding or removing a slave module, or changing the address of the slave module, execute the automatic address detection. (☞ Page 55 Automatic Address Detection Function) After executing the automatic address detection function, check that the number of slave modules and the address are consistent with those of the actual system.
Does the slave module exist?	When the LINK LED of the slave module does not flash, check that there is no disconnection, short circuit, incorrect wiring, or poor contact in the transmission cables (DP, DN) around the module.

When the SET LED is flashing and does not turn off

When the SET LED is flashing and does not turn off, check the following.

Check item	Action
Is 'Parameter access completion flag' (Un\G28 b9) off or is 'Automatic address detection flag' (Un\G28 b11) on?	• Reset the CPU module or power off and on the system. • Check that automatic address detection is not executed while parameter access is in progress.

9.2 Checking Module Status

Checking with the buffer memory

The following shows the check method with the buffer memory.

Check method

[Online] ⇨ [Monitor] ⇨ [Device/Buffer Memory Batch Monitor]

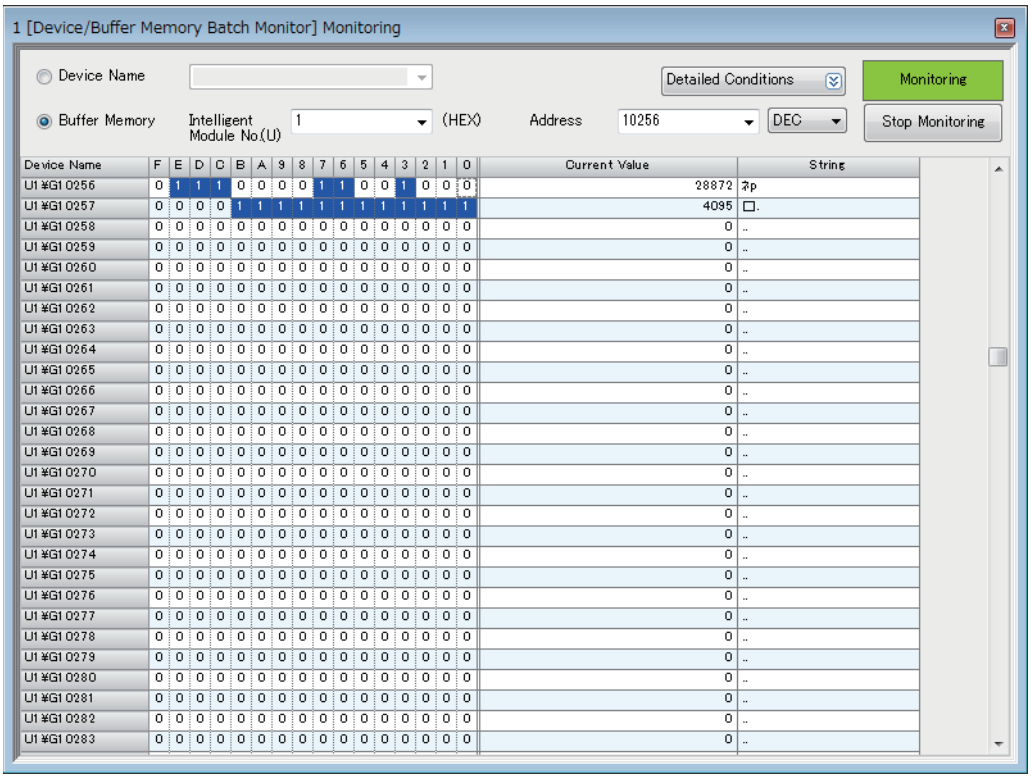

Check item

For details on the buffer memory, refer to the following.

☞ Page 74 Buffer Memory

■Check of the error details

The error code of the FX5-ASL-M is stored in 'Latest error code storage area' (Un\G10256).

■Check of the error ID area

The number of error IDs is stored in 'Number of the error IDs' (Un\G8192) and the ID information is stored in 'Error ID information storage area' (Un\G8193 to Un\G8320).

■Check of the alarm signal area

The number of slave modules having an error is stored in 'Number of the alarm IDs' (Un\G9984) and the ID information is stored in 'Alarm ID information storage area' (Un\G9985 to Un\G10112).

■Check of the error details of the slave module

The details of errors in the slave module are stored in the status details in 'Parameter storage area' (Un\G12288 to Un\G12335).*1

*1 Buffer memory addresses when one slave module is connected. For details, refer to the following.
☞ Page 82 Parameter storage area

9.3 Troubleshooting by Symptom

This section describes troubleshooting method by symptom. If an error has occurred in the FX5-ASL-M, identify the error cause with GX Works3. (☞ Page 67 Checking Module Status)

AnyWireASLINK transmission is not available

When AnyWireASLINK transmission is not available, check the following.

Check item	Action
Is the LINK LED of the FX5-ASL-M on or off?	Perform the troubleshooting for when the LINK LED is on or off. (☞ Page 65 When the LINK LED turns on or off)
Are the number of transmission points of the FX5-ASL-M and the address setting of the slave module correct?	• Check that the address of the slave module is within the number of transmission points of the FX5-ASL-M. • Check that the ID of the slave module is not the same as the IDs of other slave modules.
Does the total length of the transmission cables (DP, DN) exceed 200 m?	When the total length exceeds 200 m, adjust the total length within 200 m.
Do the wires or cables used satisfy standards?	When they do not satisfy the standards, change the wires or cables with the ones that satisfy the standards.

When communication is unstable

When communications are unstable, check the following.

Check item	Action
Is the ambient temperature for the module within the specified range?	Keep the ambient temperature within the specified range by taking action such as removing heat source.
Is there any noise affecting the system?	Check the wiring condition.
Is the terminating unit connected properly?	Pay attention to the polarities of the terminating unit and connect it properly.
Does the total length of the transmission cables (DP, DN) exceed the specified range?	Adjust the total length of the AnyWireASLINK system within the specified range.
Do the transmission cables (DP, DN) satisfy the specifications?	• Use transmission cables (DP, DN) that satisfy the specifications such as the type and wire diameter, and tightening torque to the terminal block. • Do not run multiple transmission cables (DP, DN) using a multicore cable.
Does the power supply voltage of the 24 V DC external power supply satisfy the specifications?	Adjust the power supply voltage of the 24 V DC external power supply within the rated value (21.6 to 27.6 V DC). (The recommended voltage is 26.4 V DC.)
Are two or more FX5-ASL-M modules connected within one AnyWireASLINK line?	Connect only one FX5-ASL-M module within one AnyWireASLINK line.
Are there AnyWireASLINK system master modules of different series connected within one AnyWireASLINK line?	Connect only one AnyWireASLINK system master module within one AnyWireASLINK line.

When data of the slave module cannot be checked

When I/O data and parameter data of the slave module cannot be checked, check the following.

Check item	Action
Is the I/O information of the slave module stored in the following buffer memory addresses in the program? • 'Input information area' (Un\G0 to Un\G15) • 'Output information area' (Un\G4096 to Un\G4111)	Check that information regarding the slave module has been properly assigned and that the instructions written in the program are free from mistakes.
Are the I/O LEDs of the slave module normal?	Check the I/O LED status of the slave module and check that there is no disconnection, short circuit, or poor contact in the wiring on the load side.
Are two or more FX5-ASL-M modules connected within one AnyWireASLINK line?	Connect only one FX5-ASL-M module within one AnyWireASLINK line.

9.4 List of Error Codes

This section describes errors that occur in processing for data communication between the FX5-ASL-M and slave modules and in processing requests from the CPU module, and error codes, error definitions, and causes of the errors, and actions against the errors.

Error code (hexadecimal)	Error details and causes	Action	Priority
1867H 3064H 3065H 3066H	FX5-ASL-M hardware failure	A malfunction has been detected in the FX5-ASL-M hardware. Reset the CPU module or power off and on the system. If the error occurs again, the FX5-ASL-M may be in failure. Please consult your local Mitsubishi Electric representative.	1 (high)
0CC8H	Transmission cable voltage drop error	The voltage of the 24 V DC external power supply may be insufficient. Perform the following: • Adjust the power supply voltage of the 24 V DC external power supply within the rated value (21.6 to 27.6 V DC). (The recommended voltage is 26.4 V DC.) • Check that the power cables (24V, 0V) are not disconnected or short-circuited. When crimping the link connector, check that the pin layout is correct. • Check that the 24 V DC external power supply is properly connected to the terminal blocks of the FX5-ASL-M and the slave module. • Check that there is no short circuit or incorrect wiring and screws are tightened sufficiently.	2
0CC9H	DP/DN short error	A short-circuit may be occurring in the transmission cables (DP, DN) or the maximum supply current of the transmission cables (DP, DN) may be exceeded. Perform the following: • Check that the transmission cables (DP, DN) are not short-circuited. When crimping the link connector, check that the pin layout is correct. • Check that the transmission cables (DP, DN) are not in contact with each other and that there is no incorrect wiring in the terminal block wiring of the FX5-ASL-M and the slave module. • Correct the cables (wire diameter, total length) and modules (type, the number of connected modules) so that the current consumption of all the slave modules does not exceed the transmission cable supply current of the FX5-ASL-M.	3
0CCAH	DP/DN disconnection error	The transmission cables (DP, DN) may be disconnected, or there may be no response from the slave module. The slave module may be in failure or the system configuration may have been changed after the automatic address detection. Check 'Number of the error IDs' (Un\G8192) and 'Error ID information storage area' (Un\G8193 to Un\G8320), find out the disconnected area, and perform the following: • Check that the transmission cables are free from disconnection. Check that the cables are crimped with proper pin layout using link connectors appropriate to the wire diameter. • Check that the transmission cables (DP, DN) are properly connected to the terminal block of the FX5-ASL-M. Check that there is no incorrect wiring and that screws are tightened sufficiently. • When creating a new system, adding or removing a slave module, or changing the address of the slave module, execute the automatic address detection. After executing the automatic address detection function, check that the number of slave modules and the address are consistent with those of the actual system. • If the LINK LED of the slave module does not flash, check that there is no disconnection, short circuit, incorrect wiring, or poor contact in the transmission cables (DP, DN) around the module.	4

Error code (hexadecimal)	Error details and causes	Action	Priority
0CCBH	24V/DP short error	A short-circuit may be occurring in the transmission cables (24V, DP). Perform the following: • Check that the transmission cables (24V, DP) are not short-circuited. When crimping the link connector, check that the pin layout is correct. • Check that the transmission cables (24V, DP) are not in contact with each other and that there is no incorrect wiring in the terminal block wiring of the FX5-ASL-M and the slave module.	4
0D2CH 0D2DH	Slave module hardware error	A malfunction has been detected in the slave module hardware. Reset the CPU module or power off and on the system. Check that there is no influence from noise. If the error occurs again, the module may be in failure. Please consult your local Mitsubishi Electric representative.	5
0D2EH	Parameter access target module ID error	The FX5-ASL-M accessed the parameter of the ID where the automatic address detection has not been executed. Check 'Number of the alarm IDs' (Un\G9984) and 'Alarm ID information storage area' (Un\G9985 to Un\G10112), find out the error ID, and perform the following: • Check that the slave module ID for parameter access in the actual system matches that of the program. Especially note that the input slave module ID is the input slave module address + 200H and that the I/O combined slave module ID is the I/O combined slave module address + 200H. • When creating a new system, adding or removing a slave module, or changing the address of the slave module, execute the automatic address detection. After executing the automatic address detection function, check that the number of slave modules and the address are consistent with those of the actual system.	5
0D2FH	Parameter value error	The slave module has detected a signal of writing a parameter that cannot be set to the slave module itself. Check 'Number of the alarm IDs' (Un\G9984) and 'Alarm ID information storage area' (Un\G9985 to Un\G10112) to find out the error ID. Then check that the slave module parameter setting value is within the allowable setting range.	5
0D30H	Parameter access error	An ASLINK parameter access signal error has been detected. Check that there is no influence from noise.	5
0D31H	Slave module status error	The slave module has notified of error status. Check the target module's status details and solve the problem.	5
0D90H	Same ID used error	The same ID (address) has been set to some of the connected slave modules. Check 'Number of the alarm IDs' (Un\G9984) and 'Alarm ID information storage area' (Un\G9985 to Un\G10112) to find out the error ID. Check the ID (address) of the slave module, and then set a unique number.	5
0D91H	No ID setting error	There is a slave module with no address setting. Perform the following: • Set the address of the slave module. • Set the address of the slave module to a value other than 255.	5
0D92H	New ID error	The new ID (address) of the slave module may be in the following condition. • The ID has already been used. • The ID exceeds the allowable specification range. Check 'Connected module ID information storage area' (Un\G9217 to Un\G9344) and set another new ID (address).	5

APPENDICES

Appendix 1 External Dimensions

This chapter describes the external dimensions of the FX5-ASL-M.

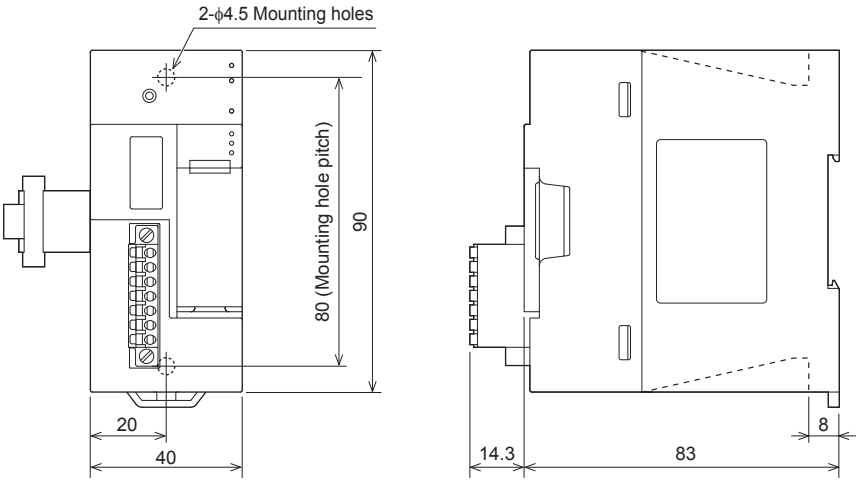

(Unit: mm)

A

Appendix 2 Standards

Certification of UL, cUL standards

The FX5-ASL-M supports UL (UL, cUL) standards.
For models that support UL standards, refer to the following.
UL, cUL file number: E95239

Compliance with EC directive (CE Marking)

This note does not guarantee that an entire machine produced in accordance with the contents of this note will comply with the following standards.
Compliance to EMC directive and LVD directive of the entire mechanical module should be checked by the user/manufacturer. For more details please contact to the local Mitsubishi Electric sales site.

Requirement for compliance with EMC directive

The following products have shown compliance through direct testing (of the identified standards below) and design analysis (through the creation of a technical construction file) to the European Directive for Electromagnetic Compatibility (2014/30/EU) when used as directed by the appropriate documentation.

Attention

This product is designed for use in industrial applications.

Product compatibility

Type: Programmable controller (open type equipment)
Models: FX5 manufactured

from April 1st, 2017	FX5-ASL-M

Electromagnetic compatibility (EMC) directive	Remarks
EN61131-2:2007 Programmable controllers - Equipment requirements and tests	Compliance with all relevant aspects of the standard. EMI • Radiated emission • Conducted emission EMS • Radiated electromagnetic field • Fast transient burst • Electrostatic discharge • High-energy surge • Voltage drops and interruptions • Conducted RF • Power frequency magnetic field

Caution for compliance with EC Directive

Caution for when the FX5-ASL-M is used

When the FX5-ASL-M is used, attach a ferrite core to the power supply of the CPU module.
Make 2 turns around the ferrite core and attach within approximately 200 mm from the terminal block and connectors of the power cable. (Ferrite core used in Mitsubishi Electric's test: E04SR401938 manufactured by SEIWA ELECTRIC MFG. CO., LTD.)

Appendix 3 Module Label

The buffer memory of the FX5-ASL-M can be set using module label.

Structure of the module label

The module label name is defined with the following structure.

"Instance name"_"Module number"."Label name"_D

Ex.

FX5ASLM_1.uInputInformationArea_D

■Instance name

The following is the instance name of the FX5-ASL-M.

Model	Instance name
FX5-ASL-M	FX5ASLM

■Module number

A sequential number starting with "1" for identifying a module from the one with the same instance name.

■Label name

A label name unique to the module.

■_D

This symbol indicates that the module label is for direct access.

Type	Description	Access timing
Direct access	The values read/written from/to the module labels are reflected to the module immediately. Although the execution time of the program is longer than the one at the refresh, the responsiveness is improved.	At writing to or reading from the module label

A

Appendix 4 Buffer Memory

Buffer memory is for data communications between the FX5-ASL-M and the CPU module or the FX5-ASL-M and slave modules.
When the CPU module is reset or the system is powered off and on, the data in the buffer memory are set back to the default (initial values).

List of buffer memory addresses

Address (decimal)	Address (hexadecimal)	Name	Initial value	Read/write
0 to 15	0000H to 000FH	Input information area	0	Read
16 to 26	0010H to 001AH	System area		
27	001BH	Data access command	0	Read/write
28	001CH	Status information	0	Read
29	001DH	Latest error code storage area	0	Read
30	001EH	Module information	26592	Read
31	001FH	F/W version	—	Read
32	0020H	Number of input points setting value	0	Read
33	0021H	Number of output points setting value	0	Read
34 to 4095	0022H to 0FFFH	System area		
4096 to 4111	1000H to 100FH	Output information area	0	Read/write
4112 to 8191	1010H to 1FFFH	System area		
8192	2000H	Number of the error IDs	0	Read
8193 to 8320	2001H to 2080H	Error ID information storage area	0	Read
8321 to 8703	2081H to 21FFH	System area		
8704 to 8719	2200H to 220FH	Error ID information bit area (output)	0	Read
8720 to 8735	2210H to 221FH	System area		
8736 to 8751	2220H to 222FH	Error ID information bit area (input)	0	Read
8752 to 8959	2230H to 22FFH	System area		
8960	2300H	Number of the connected modules	0	Read
8961 to 9215	2301H to 23FFH	System area		
9216	2400H	Number of the IDs of the connected modules	0	Read
9217 to 9344	2401H to 2480H	Connected module ID information storage area	0	Read
9345 to 9983	2481H to 26FFH	System area		
9984	2700H	Number of the alarm IDs	0	Read
9985 to 10112	2701H to 2780H	Alarm ID information storage area	0	Read
10113 to 10255	2781H to 280FH	System area		
10256	2810H	Latest error code storage area	0	Read
10257	2811H	Latest error ID storage area	0	Read
10258 to 10319	2812H to 284FH	System area		
10320	2850H	Parameter access setting	0	Read/write
10321	2851H	Parameter access target module ID specification	0	Read/write
10322	2852H	System area		
10323	2853H	Change ID specification	0	Read/write
10324 to 10495	2854H to 28FFH	System area		
10496 to 10751	2900H to 29FFH	Parameter storage location memory number (output)	0	Read
10752 to 11007	2A00H to 2AFFH	System area		
11008 to 11263	2B00H to 2BFFH	Parameter storage location memory number (input)	0	Read
11264 to 12287	2C00H to 2FFFH	System area		
12288 to 18431	3000H to 47FFH	Parameter storage area	0	Read/write
18432 to 32767	4800H to 7FFFH	System area		

Point

Do not write data to "System area".
Doing so may cause malfunction of the programmable controller system.

Details of buffer memory addresses

Input information area

This buffer memory area automatically stores the on/off status of the input signal of the slave module.

■Input information area (Un\G0 to Un\G15)

Address	b15	b14	b13	b12	b11	b10	b9	b8	b7	b6	b5	b4	b3	b2	b1	b0
Un\G0	15	14	13	12	11	10	9	8	7	6	5	4	3	2	1	0
Un\G1	31	30	29	28	27	26	25	24	23	22	21	20	19	18	17	16
Un\G2	47	46	45	44	43	42	41	40	39	38	37	36	35	34	33	32
Un\G3	63	62	61	60	59	58	57	56	55	54	53	52	51	50	49	48
Un\G4	79	78	77	76	75	74	73	72	71	70	69	68	67	66	65	64
Un\G5	95	94	93	92	91	90	89	88	87	86	85	84	83	82	81	80
Un\G6	111	110	109	108	107	106	105	104	103	102	101	100	99	98	97	96
Un\G7	127	126	125	124	123	122	121	120	119	118	117	116	115	114	113	112
Un\G8	143	142	141	140	139	138	137	136	135	134	133	132	131	130	129	128
Un\G9	159	158	157	156	155	154	153	152	151	150	149	148	147	146	145	144
Un\G10	175	174	173	172	171	170	169	168	167	166	165	164	163	162	161	160
Un\G11	191	190	189	188	187	186	185	184	183	182	181	180	179	178	177	176
Un\G12	207	206	205	204	203	202	201	200	199	198	197	196	195	194	193	192
Un\G13	223	222	221	220	219	218	217	216	215	214	213	212	211	210	209	208
Un\G14	239	238	237	236	235	234	233	232	231	230	229	228	227	226	225	224
Un\G15	255	254	253	252	251	250	249	248	247	246	245	244	243	242	241	240

Ex.

If a 2-point input slave module (address 10) is connected, the 2 bits from Un\G0.A are occupied for the input signal because the setting address is 10. (b10 and b11 of Un\G0 turn on or off.)

Data access command

Various data access commands from the CPU module to the FX5-ASL-M are stored as shown below.

■Data access command (Un\G27)

Address	b15	b14	b13	b12	b11	b10	b9	b8	b7	b6	b5	b4	b3	b2	b1	b0
Un\G27	Refer to the following table.															

Bit No.	Description	Bit status	
		ON	OFF
Un\G27 b0	Error flag clear command	Execution	Standby
Un\G27 b1	Automatic address detection command	Execution	Standby
Un\G27 b2	Overlap address inspection command	Execution	Standby
Un\G27 b3 to 7	System area	—	—
Un\G27 b8	Parameter access request command for the slave module	Execution	Standby
Un\G27 b9	Parameter batch read command for the slave module	Execution	Standby
Un\G27 b10	Parameter batch write command for the slave module	Execution	Standby
Un\G27 b11 to 15	System area	—	—

Status information

The status information of the FX5-ASL-M is stored as shown below.

■Status information (Un\G28)

Address	b15	b14	b13	b12	b11	b10	b9	b8	b7	b6	b5	b4	b3	b2	b1	b0
Un\G28	Refer to the following table.															

Bit No.	Description	Bit status	
		ON	OFF
Un\G28 b0	Module READY	Normal	Failure
Un\G28 b1	DP/DN short error	Failure	Normal
Un\G28 b2	24V/DP short error	Failure	Normal
Un\G28 b3	Transmission cable voltage drop error	Failure	Normal
Un\G28 b4	DP/DN disconnection error	Failure	Normal
Un\G28 b5 to 7	System area	—	—
Un\G28 b8	Slave module alarm signal	Failure	Normal
Un\G28 b9	Parameter access completion flag	Access completion	Progress
Un\G28 b10	Parameter access error	Failure	Normal
Un\G28 b11	Automatic address detection flag	Being executed	Waiting
Un\G28 b12	Overlap address inspection flag	Being executed	Waiting
Un\G28 b13 to 15	System area	—	—

Latest error code storage area

■Latest error code storage area (Un\G29)

This buffer memory area stores the latest error code detected in the FX5-ASL-M. For details on the error codes, refer to the following.

☞ Page 69 List of Error Codes

Module information

■Module information (Un\G30)

This buffer memory area stores the model code assigned to each individual intelligent function module.

F/W version

■F/W version (Un\G31)

This buffer memory area stores the FX5-ASL-M F/W version.

Ex.

For Ver.1.000, 1000 (decimal) is stored.

Number of input points setting value

■Number of input points setting value (Un\G32)

This buffer memory area stores the number of input points value set with GX Works3.

Number of output points setting value

■Number of output points setting value (Un\G33)

This buffer memory area stores the number of output points value set with GX Works3.

Output information area

When the on/off data of an output signal of a slave module is written from the CPU module, the slave module automatically outputs a signal.

■Output information area (Un\G4096 to Un\G4111)

Address	b15	b14	b13	b12	b11	b10	b9	b8	b7	b6	b5	b4	b3	b2	b1	b0
Un\G4096	15	14	13	12	11	10	9	8	7	6	5	4	3	2	1	0
Un\G4097	31	30	29	28	27	26	25	24	23	22	21	20	19	18	17	16
Un\G4098	47	46	45	44	43	42	41	40	39	38	37	36	35	34	33	32
Un\G4099	63	62	61	60	59	58	57	56	55	54	53	52	51	50	49	48
Un\G4100	79	78	77	76	75	74	73	72	71	70	69	68	67	66	65	64
Un\G4101	95	94	93	92	91	90	89	88	87	86	85	84	83	82	81	80
Un\G4102	111	110	109	108	107	106	105	104	103	102	101	100	99	98	97	96
Un\G4103	127	126	125	124	123	122	121	120	119	118	117	116	115	114	113	112
Un\G4104	143	142	141	140	139	138	137	136	135	134	133	132	131	130	129	128
Un\G4105	159	158	157	156	155	154	153	152	151	150	149	148	147	146	145	144
Un\G4106	175	174	173	172	171	170	169	168	167	166	165	164	163	162	161	160
Un\G4107	191	190	189	188	187	186	185	184	183	182	181	180	179	178	177	176
Un\G4108	207	206	205	204	203	202	201	200	199	198	197	196	195	194	193	192
Un\G4109	223	222	221	220	219	218	217	216	215	214	213	212	211	210	209	208
Un\G4110	239	238	237	236	235	234	233	232	231	230	229	228	227	226	225	224
Un\G4111	255	254	253	252	251	250	249	248	247	246	245	244	243	242	241	240

Ex.

If a 2-point output slave module (address 30) is connected, the 2 bits from Un\G4097.E are occupied for the output signal because the setting address is 30. (b14 and b15 of Un\G4097 turn on or off.)

Number of the error IDs

■Number of the error IDs (Un\G8192)

This buffer memory area stores the number of error IDs that send no response due to disconnection of the transmission cable (DP, DN) or a failure in the slave module alone among the IDs of the connected modules. (Up to 128 IDs)

The stored values are retained until the power is turned off and on or 'Error flag clear command' (Un\G27 b0) is turned off and on after the error is cleared.

However, if the error status automatic recovery function is enabled, the number of slave modules (number of error IDs) from which errors are cleared automatically decreases.

Data update timing
After automatic address detection, the data are updated as soon as a response error is detected.

Error ID information storage area

■Error ID information storage area (Un\G8193 to Un\G8320)

When the transmission cables (DP, DN) are disconnected or an error in a slave module or an error (error code: 0CCAH, 0D30H) occurs, this buffer memory area stores all the error IDs in the ascending order. (Up to 128 IDs)

The IDs to be stored are as follows.

- 0000H to 00FFH: ID of an output slave module
- 0200H to 02FFH: ID of an input slave module or I/O combined slave module

The stored values are retained until the power is turned off and on or 'Error flag clear command' (Un\G27 b0) is turned off and on after the error is cleared.

However, if the error status automatic recovery function is enabled, the ID of a slave module from which an error is cleared turns off automatically.

Data update timing
After automatic address detection, the data are updated as soon as a response error is detected.

Number of the connected modules

■Number of the connected modules (Un\G8960)

This buffer memory area stores the number of slave modules detected by automatic address detection. (Up to 128 modules)

Number of the IDs of the connected modules

■Number of the IDs of the connected modules (Un\G9216)

This buffer memory area stores the number of IDs of the connected modules through automatic address detection. (Up to 128 IDs)

The number of stored IDs is retained even after the power supply is turned off.

Data update timing
The data are updated at the time of power-on or automatic address detection.

Connected module ID information storage area

■Connected module ID information storage area (Un\G9217 to Un\G9344)

This buffer memory area stores the ID information of all the slave modules connected to the FX5-ASL-M in the ascending order.

The IDs to be stored are as follows.

- 0000H to 00FFH: ID of an output slave module
- 0200H to 02FFH: ID of an input slave module or I/O combined slave module

Information of a stored ID is retained even after the power supply is turned off.

Data update timing
The data are updated at the time of power-on or automatic address detection.

Number of the alarm IDs

■Number of the alarm IDs (Un\G9984)

When a status error occurs in a slave module or an ID or parameter setting error regarding a slave module occurs, this buffer memory area stores the number of IDs relevant to alarm occurrence. (Up to 128 IDs)

The stored values are retained until the power is turned off and on or 'Error flag clear command' (Un\G27 b0) is turned off and on after the error is cleared.

Data update timing
The data are updated when the power is turned on or when an alarm has occurred after automatic address detection.

Alarm ID information storage area

■Alarm ID information storage area (Un\G9985 to Un\G10112)

This buffer memory area stores the ID information of all the slave modules where an alarm has occurred in the ascending order.

The IDs to be stored are as follows.

- 0000H to 00FFH: ID of an output slave module
- 0200H to 02FFH: ID of an input slave module or I/O combined slave module

The stored values are retained until the power is turned off and on or 'Error flag clear command' (Un\G27 b0) is turned off and on after the error is cleared.

Data update timing
The data are updated when the power is turned on or when an alarm has occurred after automatic address detection.

Error ID information bit area

These buffer memory areas show error IDs in units of bits for reference. These areas are used in the same manner as 'Error ID information storage area' (Un\G8193 to Un\G8320).

■Error ID information bit area (output) (Un\G8704 to Un\G8719)

The bits corresponding to error IDs of an output slave module turn on.

Address	b15	b14	b13	b12	b11	b10	b9	b8	b7	b6	b5	b4	b3	b2	b1	b0
Un\G8704	15	14	13	12	11	10	9	8	7	6	5	4	3	2	1	0
Un\G8705	31	30	29	28	27	26	25	24	23	22	21	20	19	18	17	16
Un\G8706	47	46	45	44	43	42	41	40	39	38	37	36	35	34	33	32
Un\G8707	63	62	61	60	59	58	57	56	55	54	53	52	51	50	49	48
Un\G8708	79	78	77	76	75	74	73	72	71	70	69	68	67	66	65	64
Un\G8709	95	94	93	92	91	90	89	88	87	86	85	84	83	82	81	80
Un\G8710	111	110	109	108	107	106	105	104	103	102	101	100	99	98	97	96
Un\G8711	127	126	125	124	123	122	121	120	119	118	117	116	115	114	113	112
Un\G8712	143	142	141	140	139	138	137	136	135	134	133	132	131	130	129	128
Un\G8713	159	158	157	156	155	154	153	152	151	150	149	148	147	146	145	144
Un\G8714	175	174	173	172	171	170	169	168	167	166	165	164	163	162	161	160
Un\G8715	191	190	189	188	187	186	185	184	183	182	181	180	179	178	177	176
Un\G8716	207	206	205	204	203	202	201	200	199	198	197	196	195	194	193	192
Un\G8717	223	222	221	220	219	218	217	216	215	214	213	212	211	210	209	208
Un\G8718	239	238	237	236	235	234	233	232	231	230	229	228	227	226	225	224
Un\G8719	255	254	253	252	251	250	249	248	247	246	245	244	243	242	241	240

■Error ID information bit area (input) (Un\G8736 to Un\G8751)

The bits corresponding to error IDs of an input slave module or I/O combined slave module turn on.

Address	b15	b14	b13	b12	b11	b10	b9	b8	b7	b6	b5	b4	b3	b2	b1	b0
Un\G8736	15	14	13	12	11	10	9	8	7	6	5	4	3	2	1	0
Un\G8737	31	30	29	28	27	26	25	24	23	22	21	20	19	18	17	16
Un\G8738	47	46	45	44	43	42	41	40	39	38	37	36	35	34	33	32
Un\G8739	63	62	61	60	59	58	57	56	55	54	53	52	51	50	49	48
Un\G8740	79	78	77	76	75	74	73	72	71	70	69	68	67	66	65	64
Un\G8741	95	94	93	92	91	90	89	88	87	86	85	84	83	82	81	80
Un\G8742	111	110	109	108	107	106	105	104	103	102	101	100	99	98	97	96
Un\G8743	127	126	125	124	123	122	121	120	119	118	117	116	115	114	113	112
Un\G8744	143	142	141	140	139	138	137	136	135	134	133	132	131	130	129	128
Un\G8745	159	158	157	156	155	154	153	152	151	150	149	148	147	146	145	144
Un\G8746	175	174	173	172	171	170	169	168	167	166	165	164	163	162	161	160
Un\G8747	191	190	189	188	187	186	185	184	183	182	181	180	179	178	177	176
Un\G8748	207	206	205	204	203	202	201	200	199	198	197	196	195	194	193	192
Un\G8749	223	222	221	220	219	218	217	216	215	214	213	212	211	210	209	208
Un\G8750	239	238	237	236	235	234	233	232	231	230	229	228	227	226	225	224
Un\G8751	255	254	253	252	251	250	249	248	247	246	245	244	243	242	241	240

Latest error code storage area

■Latest error code storage area (Un\G10256)

This buffer memory area stores the latest error code detected in the FX5-ASL-M. For details on the error codes, refer to the following.

☞ Page 69 List of Error Codes

Latest error ID storage area

■Latest error ID storage area (Un\G10257)

This buffer memory area stores the error ID corresponding to the latest error code that occurred.

- Relation of error code and error ID

Error code (hexadecimal)	Description of error	Value of the error ID storage area
1867H 3064H 3065H 3066H	FX5-ASL-M hardware failure	— (Buffer memories cannot be accessed.)
0CC8H	Transmission cable voltage drop error	0FFFH (4095) Error contents without regard to the ID
0CC9H	DP/DN short error	0FFFH (4095) Error contents without regard to the ID
0CCAH	DP/DN disconnection error	Error ID
0CCBH	24V/DP short error	0FFFH (4095) Error contents without regard to the ID
0D2CH 0D2DH	Slave module hardware error	Error ID
0D2EH	Parameter access target module ID error	0FFFH (4095) Error contents without regard to the ID
0D2FH	Parameter value error	Error ID
0D30H	Parameter access error	Error ID
0D31H	Slave module status error	Error ID
0D90H	Same ID used error	Error ID
0D91H	No ID setting error	Error ID

Parameter access setting

■Parameter access setting (Un\G10320)

Specify the parameter access method. When a value other than those below is stored, the parameter is read.

- 0000H: Read (slave module → FX5-ASL-M → CPU module)
- 0001H: Write (CPU module → FX5-ASL-M → slave module)
- 0002H: Address change (CPU module → FX5-ASL-M → slave module)

Parameter access target module ID specification

■Parameter access target module ID specification (Un\G10321)

Specify the access ID for accessing the parameters of individual IDs.

Write one of the following to specify the ID.

- 0000H to 00FFH: ID of an output slave module
- 0200H to 02FFH: ID of an input slave module or I/O combined slave module

Change ID specification

■Change ID specification (Un\G10323)

Specify a new ID (address) with the remote address change function.

Write one of the following to specify the ID.

- 0000H to 00FFH: ID of an output slave module
- 0200H to 02FFH: ID of an input slave module or I/O combined slave module

Parameter storage location memory number

This buffer memory area stores the start addresses of the buffer memory areas of the parameter storage areas for each slave modules.

The parameter storage area of each ID has 48 words. (Both Write area and Read area are included)

■Parameter storage location memory number (output) (Un\G10496 to Un\G10751)

Address	Details
Un\G10496	Buffer memory start address of the output slave module ID 0000H
Un\G10497	Buffer memory start address of the output slave module ID 0001H
⋮	⋮
Un\G10750	Buffer memory start address of the output slave module ID 00FEH
Un\G10751	Buffer memory start address of the output slave module ID 00FFH

■Parameter storage location memory number (input) (Un\G11008 to Un\G11263)

Address	Details
Un\G11008	Buffer memory start address of the input slave module or I/O combined slave module ID 0200H
Un\G11009	Buffer memory start address of the input slave module or I/O combined slave module ID 0201H
⋮	⋮
Un\G11262	Buffer memory start address of the input slave module or I/O combined slave module ID 02FEH
Un\G11263	Buffer memory start address of the input slave module or I/O combined slave module ID 02FFH

Ex.

The following table describes the buffer memory areas corresponding to the addresses of slave modules.

- Address 0: Input slave module
- Address 10: Output slave module
- Address 100: Output slave module

Address	Data*1	Description
Un\G10506	3000H (12288)	Parameter storage start address of the output slave module with the address 10 (ID: 0010H)
Un\G10596	3030H (12336)	Parameter storage start address of the output slave module with the address 100 (ID: 0100H)
Un\G11008	3060H (12384)	Parameter storage start address of the input slave module with the address 0 (ID: 0200H)

*1 Data stored in the buffer memory address
For example, when "3000H" is stored in the buffer memory address "Un\G10506", it indicates that parameters are stored in the buffer memory addresses "Un\G12288 to Un\G12335".

Point

For the parameter storage location memory number of a non-existing ID, 0000H is stored.

A

Parameter storage area

This buffer memory area stores parameters for slave modules with IDs.

■Parameter storage area (Un\G12288 to Un\G18431)

Address	Description	Details
Un\G12288 to Un\G12335	Parameter storage area 1 (48 words)	• The parameter storage area of each ID has 48 words. • Information of up to 128 parameters can be stored. • The ID is stored in the start address of each parameter area. • A single storage area has 48 words and the data are sorted in the ascending order of IDs. • When adding a slave module or changing the ID of a slave module, execute automatic address detection again.
Un\G12336 to Un\G12383	Parameter storage area 2 (48 words)	
⋮	⋮	
Un\G18336 to Un\G18383	Parameter storage area 127 (48 words)	
Un\G18384 to Un\G18431	Parameter storage area 128 (48 words)	

Ex.

When five slave modules are connected, the buffer memory addresses of the parameter storage areas are as follows.

Module	Parameter storage area	Device parameter read/write area
First slave module	Un\G12288 to Un\G12335	Un\G12289 to Un\G12307
Second slave module	Un\G12336 to Un\G12383	Un\G12337 to Un\G12355
Third slave module	Un\G12384 to Un\G12431	Un\G12385 to Un\G12403
Fourth slave module	Un\G12432 to Un\G12479	Un\G12433 to Un\G12451
Fifth slave module	Un\G12480 to Un\G12527	Un\G12481 to Un\G12499

Point

The parameter of the slave module is moved over in order of ID and stored in 'Parameter storage area' (Un\G12288 to Un\G18431) after the automatic address detection function is executed.
Because of this, the address of the parameter storage area for the slave module later than the ID where the slave module is added or deleted in the AnyWireASLINK system is changed. (The parameter of a non-existing ID is deleted and displayed.)
Therefore, the address of the slave module later than the ID where the slave module is added or deleted must be changed when a program is created with buffer memory addresses directly specified. (This also applies if the ID is changed and sorting order is switched.)
With 'Parameter storage location memory number (output)' (Un\G10496 to Un\G10751) or 'Parameter storage location memory number (input)' (Un\G11008 to Un\G11263), a program that reads/writes the parameter can be created without considering the addition or deletion of slave modules.

■48-word structure (details on parameter storage area)

The parameter storage area 1 (Un\G12288 to Un\G12335) is given as an example of the 48-word structure below.

Address	Description	Read/write	Parameter name
Un\G12288	Module ID	Read/write (FX5-ASL-M to slave module)	AnyWireASLINK parameter
Un\G12289	Device parameter 1	Read/write (FX5-ASL-M to slave module)	Device parameter
Un\G12290	Device parameter 2		
Un\G12291	Device parameter 3		
Un\G12292	Device parameter 4		
Un\G12293	Device parameter 5		
Un\G12294	Device parameter 6		
Un\G12295	Device parameter 7		
Un\G12296	Device parameter 8		
Un\G12297	Device parameter 9		
Un\G12298	Device parameter 10		
Un\G12299	Device parameter 11		
Un\G12300	Device parameter 12		
Un\G12301	Device parameter 13		
Un\G12302	Device parameter 14		
Un\G12303	Device parameter 15		
Un\G12304	Device parameter 16		
Un\G12305	Device parameter 17		
Un\G12306	Device parameter 18		
Un\G12307	Device parameter 19		
Un\G12308	Device parameter 1	Read (Slave module to FX5-ASL-M)	
Un\G12309	Device parameter 2		
Un\G12310	Device parameter 3		
Un\G12311	Device parameter 4		
Un\G12312	Device parameter 5		
Un\G12313	Device parameter 6		
Un\G12314	Device parameter 7		
Un\G12315	Device parameter 8		
Un\G12316	Device parameter 9		
Un\G12317	Device parameter 10		
Un\G12318	Device parameter 11		
Un\G12319	Device parameter 12		
Un\G12320	Device parameter 13		
Un\G12321	Device parameter 14		
Un\G12322	Device parameter 15		
Un\G12323	Device parameter 16		
Un\G12324	Device parameter 17		
Un\G12325	Device parameter 18		
Un\G12326	Device parameter 19		
Un\G12327	Status details	Read (Slave module to FX5-ASL-M)	AnyWireASLINK parameter
Un\G12328	Sensing level		
Un\G12329 to Un\G12335	System area	—	—

A

■Parameters

Each slave module has the following types of parameters:

- Device parameter (19 types)

These parameters are unique to each slave module. The contents of the parameters vary depending on the types of slave modules. For details, refer to the specifications of the slave module.

- AnyWireASLINK parameter (3 types)

These parameters are common to all the slave modules connected to AnyWireASLINK.

Name	Read/write	Corresponding buffer memory area	Detailed description
Module ID	Read/write	Un\G12288+n × 48 (n: 0 to 127) 1st of 48 words	Indicates the slave module ID. • 0000H to 00FFH: ID of an output slave module • 0200H to 02FFH: ID of an input slave module or I/O combined slave module
Status details	Read	Un\G12327+n × 48 (n: 0 to 127) 40th of 48 words	Indicates the status of the slave module. The statuses of the slave modules can be checked with the on/off status of each bit. ■b0: Module power supply status • On: Slave module voltage drop • Off: No error ■b1: Sensing level status • On: Sensing level drop • Off: No error ■b2 to b15: System area
Sensing level	Read	Un\G12328+n × 48 (n: 0 to 127) 41th of 48 words	Indicates the value of a connected sensor. The value differs depending on the connected slave module. (Example: An analog value of 0 to 100% is indicated for an ON/OFF sensor.)

Appendix 5 Processing Time

This section describes the processing time related to the transmission of AnyWireASLINK.

Transmission cycle time

In the transmission cycle time, I/O data of the FX5-ASL-M and all the slave modules is updated.
The following table lists the transmission cycle times of the FX5-ASL-M.

Transmission points setting	64 points (32 input points/32 output points)	128 points (64 input points/64 output points)	192 points (96 input points/96 output points)	256 points (128 input points/128 output points)	320 points (160 input points/160 output points)	384 points (192 input points/192 output points)	384 points (224 input points/160 output points)	384 points (256 input points/128 output points)
One-transmission cycle time	2.4 ms	3.6 ms	4.8 ms	6.0 ms	7.2 ms	8.3 ms	9.5 ms	10.7 ms

Update timing of I/O data

Input

Unless the FX5-ASL-M receives the same data twice successively, data in the input area is not updated.
A minimum of one-transmission cycle time and a maximum of two-transmission cycle time are required as data response time.
Therefore, when input data is shorter than two-transmission cycle time, the input data may not be captured depending on the timing.
To ensure the response, provide an input signal that is longer than two-transmission cycle time.

■Case of minimum data response time

If no change is detected in input data between two sampling timings, communication in one-transmission cycle time is possible.

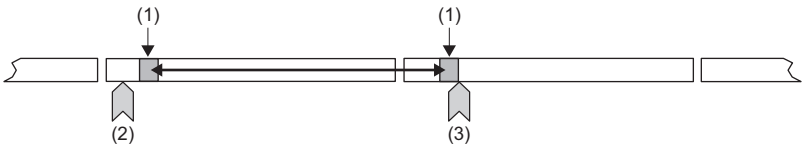

(1) Sampling timing
(2) Change of the input data
(3) Update of the input data

■Case of maximum data response time

The input data is changed after a sampling, and thus the next sampling will be the first data reception. Time equivalent to two-transmission cycle time is required.

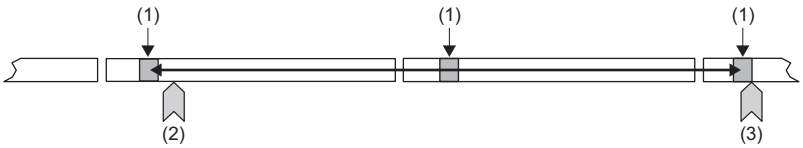

(1) Sampling timing
(2) Change of the input data
(3) Update of the input data

Output

As the double verification is executed on the slave module side, the time required is the same as that for input, namely a minimum of one-transmission cycle time and a maximum of two-transmission cycle time.

Response delay time

The following shows the response delay time of input and output.

Input response delay time

The figure below shows the time from a signal input to the slave module to turning on or off of a device of the CPU module.
The input response delay time is the total of ❶ to ❺ in the following figure.

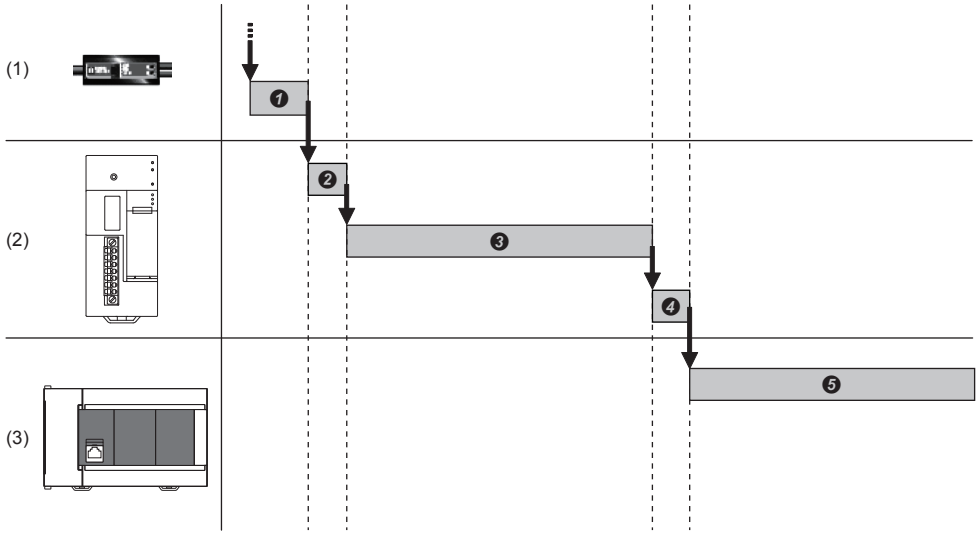

(1) Slave module
(2) AnyWireASLINK
(3) CPU module

No.	Description	Required time
❶	Input response time on the slave module	Refer to the manual for the slave module connected to the system or the device connected to the slave module.
❷	Processing time on the slave module	Approx. 0.2 ms (Differs depending on the slave module.)
❸	Transmission time	Transmission cycle time × 2 The transmission cycle time differs depending on the number of transmission points. (☞ Page 85 Transmission cycle time)
❹	Processing time on the FX5-ASL-M	0.6 ms
❺	Processing time on the programmable controller	Sequence scan time × 2

Output response delay time

The figure below shows the time from turning on or off of a device of the CPU module to turning on or off of an output of a slave module.

The output response delay time is the total of ❶ to ❺ in the following figure.

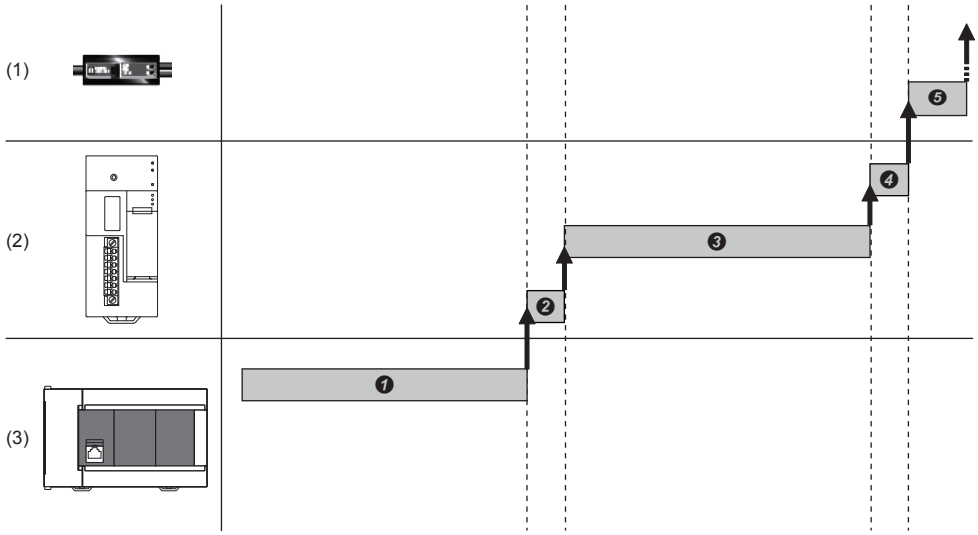

(1) Slave module
(2) AnyWireASLINK
(3) CPU module

No.	Description	Required time
❶	Processing time on the programmable controller	Sequence scan time
❷	Processing time on the FX5-ASL-M	0.6 ms
❸	Transmission time	Transmission cycle time × 2 The transmission cycle time differs depending on the number of transmission points. (☞ Page 85 Transmission cycle time)
❹	Processing time on the slave module	Approx. 0.04 ms (Differs depending on the slave module.)
❺	Output response time on the slave module	Refer to the manual for the slave module connected to the system or the device connected to the slave module.

Parameter access response time

The parameters of AnyWireASLINK provide monitoring information of slave modules or the entire system and setting information of the slave modules.

Parameter data is synchronized between the buffer memory of the FX5-ASL-M and slave modules at a cycle different from that of the I/O data.

Use the following calculation formulas to obtain the parameter access response time.

Item	Calculation formula
Update interval time of an automatically updated parameter	Number of AnyWireASLINK connection IDs × Transmission cycle time × 3
Time required for reading parameters	Number of target IDs × Transmission cycle time × 27
Time required for writing parameters	Number of target IDs × Transmission cycle time × 39

A

INDEX

0 to 9

48-word structure (details on parameter storage area) 83

A

Address 14
Address setting example 54
Alarm ID information storage area. 78
AnyWireASLINK 14
AnyWireASLINK parameter 84
Automatic address detection 55

B

Buffer memory 74

C

Change ID specification 80
Connected module ID information storage area . . 78

D

Device parameter 84

E

Error ID information bit area 79
Error ID information storage area 77

I

ID 14
Input information area 75
Input response delay time 86
Interlock program of automatic address detection . 59

L

Latest error code storage area 76,80
Latest error ID storage area 80

M

Module ID 84

N

Number of the alarm IDs 78
Number of the connected modules 78
Number of the error IDs 77
Number of the IDs of the connected modules 78

O

Output information area 77
Output response delay time 87

P

Parameter access setting 80
Parameter access target module ID specification . .80
Parameter storage area. 82
Parameter storage location memory number 81
Power supply cable (24V, 0V) 47

R

RAS 14

S

Sensing level 84
Slave module 14
Status details 84

T

T-branch 49
Terminating unit 14
Transmission cable (DP, DN). 47
Transmission cable terminal block 45
Transmission cycle time 85
Tree branch 49

W

Wire ferrule 47

MEMO

I

REVISIONS

Revision date	Revision	Description
April 2017	A	First Edition

This manual confers no industrial property rights or any rights of any other kind, nor does it confer any patent licenses. Mitsubishi Electric Corporation cannot be held responsible for any problems involving industrial property rights which may occur as a result of using the contents noted in this manual.

© 2017 MITSUBISHI ELECTRIC CORPORATION

WARRANTY

Please confirm the following product warranty details before using this product.

1. Gratis Warranty Term and Gratis Warranty Range

If any faults or defects (hereinafter "Failure") found to be the responsibility of Mitsubishi occurs during use of the product within the gratis warranty term, the product shall be repaired at no cost via the sales representative or Mitsubishi Service Company. However, if repairs are required onsite at domestic or overseas location, expenses to send an engineer will be solely at the customer's discretion. Mitsubishi shall not be held responsible for any re-commissioning, maintenance, or testing on-site that involves replacement of the failed module.

[Gratis Warranty Term]

The gratis warranty term of the product shall be for one year after the date of purchase or delivery to a designated place. Note that after manufacture and shipment from Mitsubishi, the maximum distribution period shall be six (6) months, and the longest gratis warranty term after manufacturing shall be eighteen (18) months. The gratis warranty term of repair parts shall not exceed the gratis warranty term before repairs.

[Gratis Warranty Range]

(1) The range shall be limited to normal use within the usage state, usage methods and usage environment, etc., which follow the conditions and precautions, etc., given in the instruction manual, user's manual and caution labels on the product.

(2) Even within the gratis warranty term, repairs shall be charged for in the following cases.
   1. Failure occurring from inappropriate storage or handling, carelessness or negligence by the user. Failure caused by the user's hardware or software design.
   2. Failure caused by unapproved modifications, etc., to the product by the user.
   3. When the Mitsubishi product is assembled into a user's device, Failure that could have been avoided if functions or structures, judged as necessary in the legal safety measures the user's device is subject to or as necessary by industry standards, had been provided.
   4. Failure that could have been avoided if consumable parts (battery, backlight, fuse, etc.) designated in the instruction manual had been correctly serviced or replaced.
   5. Relay failure or output contact failure caused by usage beyond the specified life of contact (cycles).
   6. Failure caused by external irresistible forces such as fires or abnormal voltages, and failure caused by force majeure such as earthquakes, lightning, wind and water damage.
   7. Failure caused by reasons unpredictable by scientific technology standards at time of shipment from Mitsubishi.
   8. Any other failure found not to be the responsibility of Mitsubishi or that admitted not to be so by the user.

2. Onerous repair term after discontinuation of production

(1) Mitsubishi shall accept onerous product repairs for one (1) year after production of the product is discontinued.
Discontinuation of production shall be notified with Mitsubishi Technical Bulletins, etc.

(2) Product supply (including repair parts) is not available after production is discontinued.

3. Overseas service

Overseas, repairs shall be accepted by Mitsubishi's local overseas FA Center. Note that the repair conditions at each FA Center may differ.

4. Exclusion of loss in opportunity and secondary loss from warranty liability

Regardless of the gratis warranty term, Mitsubishi shall not be liable for compensation to:

(1) Damages caused by any cause found not to be the responsibility of Mitsubishi.

(2) Loss in opportunity, lost profits incurred to the user by Failures of Mitsubishi products.

(3) Special damages and secondary damages whether foreseeable or not, compensation for accidents, and compensation for damages to products other than Mitsubishi products.

(4) Replacement by the user, maintenance of on-site equipment, start-up test run and other tasks.

5. Changes in product specifications

The specifications given in the catalogs, manuals or technical documents are subject to change without prior notice.

6. Product application

(1) In using the Mitsubishi MELSEC programmable controller, the usage conditions shall be that the application will not lead to a major accident even if any problem or fault should occur in the programmable controller device, and that backup and fail-safe functions are systematically provided outside of the device for any problem or fault.

(2) The Mitsubishi programmable controller has been designed and manufactured for applications in general industries, etc. Thus, applications in which the public could be affected such as in nuclear power plants and other power plants operated by respective power companies, and applications in which a special quality assurance system is required, such as for railway companies or public service purposes shall be excluded from the programmable controller applications.
In addition, applications in which human life or property that could be greatly affected, such as in aircraft, medical applications, incineration and fuel devices, manned transportation, equipment for recreation and amusement, and safety devices, shall also be excluded from the programmable controller range of applications.
However, in certain cases, some applications may be possible, providing the user consults their local Mitsubishi representative outlining the special requirements of the project, and providing that all parties concerned agree to the special circumstances, solely at the user's discretion.

TRADEMARKS

Microsoft® and Windows® are either registered trademarks or trademarks of Microsoft Corporation in the United States and/or other countries.
Ethernet is a trademark of Xerox Corporation.
Anywire and ANYWIREASLINK is a registered trademark of the Anywire Corporation.
MODBUS® is a registered trademark of Schneider Electric SA.
The company name and the product name to be described in this manual are the registered trademarks or trademarks of each company.

Anywire Anywire Corporation www.anywire.jp

Manual number: SH(NA)-081796ENG-A
Model: FX5-U-ANYWIRE-E
Model code: 09R569

When exported from Japan, this manual does not require application to the Ministry of Economy, Trade and Industry for service transaction permission.

MITSUBISHI ELECTRIC CORPORATION

HEAD OFFICE: TOKYO BUILDING, 2-7-3 MARUNOUCHI, CHIYODA-KU, TOKYO 100-8310, JAPAN

Specifications are subject to change without notice.