MITSUBISHI ELECTRIC

Programmable Controller

MELSEC iQ-F series

MELSEC iQ-F
FX5 User's Manual (Serial Communication)

SAFETY PRECAUTIONS

(Read these precautions before use.)

Before using this product, please read this manual and the relevant manuals introduced in this manual carefully and pay full attention to safety in order to handle the product correctly.

This manual classifies the safety precautions into two categories: "⚠ WARNING" and "⚠ CAUTION".

⚠ **WARNING**	Indicates that incorrect handling may cause hazardous conditions, resulting in death or severe injury.
⚠ **CAUTION**	Indicates that incorrect handling may cause hazardous conditions, resulting in minor or moderate injury or property damage.

Depending on the circumstances, procedures indicated by "⚠ CAUTION" may also cause severe injury

It is important to follow all precautions for personal safety.

Store this manual in a safe place so that it can be read whenever necessary. Always forward it to the end user.

[DESIGN PRECAUTIONS]

⚠ WARNING

- Make sure to set up the following safety circuits outside the PLC to ensure safe system operation even during external power supply problems or PLC failure. Otherwise, malfunctions may cause serious accidents.
  - Note that when the CPU module detects an error, such as a watchdog timer error, during self-diagnosis, all outputs are turned off. Also, when an error that cannot be detected by the CPU module occurs in an input/output control block, output control may be disabled. External circuits and mechanisms should be designed to ensure safe machinery operation in such a case.
- Construct an interlock circuit in the program so that the whole system always operates on the safe side before executing the control (for data change) of the PLC in operation. Read the manual thoroughly and ensure complete safety before executing other controls (for program change, parameter change, forcible output and operation status change) of the PLC in operation.
  Otherwise, the machine may be damaged and accidents may occur due to erroneous operations.
- When executing control (data change) to a running other station programmable controller by connecting the external device to the MC Protocol compatible device, configure interlock circuits in the program of the other station programmable controller to ensure that the entire system operates safely at any time.
  For other controls to a running other station programmable controller (such as program modification or operating status change), read relevant manuals carefully and ensure the safety before the operation.
  Especially, in the case of a control from an external device to a remote other station programmable controller, immediate action cannot be taken for a problem on the programmable controller due to a communication failure.
  Determine the handling method as a system when communication failure occurs along with configuration of interlock circuit on other station PLC program, by considering external equipment and other station PLC.
- Do not write any data into the "system area" or "write protect area" of the buffer memory in the MC Protocol compatible device or intelligent function module. Also, do not output (ON) any "use prohibited" signals among the signals which are output to the SLMP compatible device and intelligent function device. Executing data writing to the "system area" or "write protect area", or outputting "use prohibited" signals may cause malfunction of the programmable controller alarm.

⚠WARNING

- To maintain the safety of the programmable controller system against unauthorized access from external devices via the network, take appropriate measures. To maintain the safety against unauthorized access via the Internet, take measures such as installing a firewall.

[WIRING PRECAUTIONS]

⚠WARNING

- Make sure to cut off all phases of the power supply externally before attempting installation or wiring work. Failure to do so may cause electric shock or damage to the product.
- Make sure to attach the terminal cover, provided as an accessory, before turning on the power or initiating operation after installation or wiring work. Failure to do so may cause electric shock.
- The temperature rating of the cable should be 80°C or more.
- Make sure to wire the screw terminal block in accordance with the following precautions. Failure to do so may cause electric shock, equipment failures, a short-circuit, wire breakage, malfunctions, or damage to the product.
  - The disposal size of the cable end should follow the dimensions described in the manual.
  - Tightening torque should follow the specifications in the manual.
  - Tighten the screws using a Phillips-head screwdriver No.2 (shaft diameter 6 mm or less). Make sure that the screwdriver does not touch the partition part of the terminal block.
- Make sure to properly wire to the terminal block (European type) in accordance with the following precautions. Failure to do so may cause electric shock, equipment failures, a short-circuit, wire breakage, malfunctions, or damage to the product.
  - The disposal size of the cable end should follow the dimensions described in the manual.
  - Tightening torque should follow the specifications in the manual.
  - Twist the ends of stranded wires and make sure that there are no loose wires.
  - Do not solder-plate the electric wire ends.
  - Do not connect more than the specified number of wires or electric wires of unspecified size.
  - Affix the electric wires so that neither the terminal block nor the connected parts are directly stressed.

[WIRING PRECAUTIONS]

⚠CAUTION

- Install module so that excessive force will not be applied to terminal blocks, power connectors, I/O connectors, communication connectors, or communication cables.
  Failure to do so may result in wire damage/breakage or PLC failure.
- Make sure to observe the following precautions in order to prevent any damage to the machinery or accidents due to malfunction of the PLC caused by abnormal data written to the PLC due to the effects of noise:
  (1) Do not bundle the power line, control line and communication cables together with or lay them close to the main circuit, high-voltage line, load line or power line. As a guideline, lay the power line, control line and communication cables at least 100 mm away from the main circuit, high-voltage line, load line or power line.
  (2) Ground the shield of the shield wire or shielded cable at one point on the PLC. However, do not use common grounding with heavy electrical systems.

[STARTUP AND MAINTENANCE PRECAUTIONS]

⚠WARNING

- Do not touch any terminal while the PLC's power is on. Doing so may cause electric shock or malfunctions.
- Before cleaning or retightening terminals, cut off all phases of the power supply externally. Failure to do so in the power ON status may cause electric shock.
- Before modifying the program in operation, forcible output, running or stopping the PLC, read through this manual carefully, and ensure complete safety. An operation error may damage the machinery or cause accidents.
- Do not change the program in the PLC from two or more peripheral equipment devices at the same time. (i.e. from an engineering tool and a GOT) Doing so may cause destruction or malfunction of the PLC program.

[STARTUP AND MAINTENANCE PRECAUTIONS]

⚠CAUTION

- Do not disassemble or modify the PLC. Doing so may cause fire, equipment failures, or malfunctions. For repair, contact your local Mitsubishi Electric representative.
- Turn off the power to the PLC before connecting or disconnecting any extension cable. Failure to do so may cause equipment failures or malfunctions.
- Turn off the power to the PLC before attaching or detaching the following devices. Failure to do so may cause equipment failures or malfunctions.
  - Peripheral devices, expansion board, expansion adapter, and connector conversion adapter
  - Extension modules, bus conversion module, and connector conversion module
  - Battery
- Read relevant manuals carefully and ensure the safety before performing online operations (operation status change) with peripheral devices connected to the running MC Protocol compatible device or CPU modules of other stations. Improper operation may damage machines or cause accidents.

INTRODUCTION

This manual explains the communication specifications and settings of the serial communication of FX5.
It should be read and understood before attempting to install or use the unit. Store this manual in a safe place so that you can read it whenever necessary.
Always forward it to the end user.

Regarding use of this product

- This product has been manufactured as a general-purpose part for general industries, and has not been designed or manufactured to be incorporated in a device or system used in purposes related to human life.
- Before using the product for special purposes such as nuclear power, electric power, aerospace, medicine or passenger movement vehicles, consult Mitsubishi Electric.
- This product has been manufactured under strict quality control. However when installing the product where major accidents or losses could occur if the product fails, install appropriate backup or failsafe functions into the system.

Note

- If in doubt at any stage during the installation of the product, always consult a professional electrical engineer who is qualified and trained to the local and national standards. If in doubt about the operation or use, please consult your local Mitsubishi Electric representative.
- Mitsubishi Electric will not accept responsibility for actual use of the product based on these illustrative examples. Please use it after confirming the function and safety of the equipment and system.
- The content, specification etc. of this manual may be changed, for improvement, without notice.
- The information in this manual has been carefully checked and is believed to be accurate; however, if you notice a doubtful point, an error, etc., please contact your local Mitsubishi Electric representative.

MEMO

CONTENTS

SAFETY PRECAUTIONS 1
INTRODUCTION 4
RELEVANT MANUALS 12
TERMS 13

CHAPTER 1 OUTLINE 15

CHAPTER 2 N:N NETWORK 16

2.1 Outline of System 16
2.2 Procedures before Operation 17
2.3 System Configuration 17
2.4 Specifications 18
Communication specifications 18
Link specifications 19
2.5 Wiring 21
Wiring procedure 21
Cable 21
Termination resistor setting 23
Connection diagram 23
Grounding 24
2.6 Communication Setting 24
2.7 Programming 27
Communication setting 27
Contents of related devices 27
Communication test 29
Create the master station program 31
Create programs for the slave stations 33
Cautions on program creation 34
2.8 Troubleshooting 35
Checking communication status based on LED indication 35
Checking installation and wiring 35
Checking sequence program 36
Checking the communication setting 36
Checking absence/presence of errors 36
2.9 Related Devices 38
List of related devices 38
Details of related devices 43

CHAPTER 3 PARALLEL LINK FUNCTION 50

3.1 Function Outline 50
3.2 Procedure before Operation 51
3.3 System Configuration 51
3.4 Specifications 52
Communication specifications 52
Link specifications 52
3.5 Wiring 54
Wiring procedure 54
Cable 54

Termination resistor setting . . . 56
Connection diagram . . . 56
Grounding . . . 57
3.6 Communication Setting . . . 57
3.7 Programming . . . 59
Communication Settings . . . 59
Contents of related devices . . . 59
Communication test . . . 61
Creation of programs for master station . . . 62
Creation of programs for slave station . . . 63
Cautions on program creation . . . 63
3.8 Troubleshooting . . . 64
Checking communication status based on LED indication . . . 64
Checking installation and wiring . . . 64
Checking sequence program . . . 64
Checking the communication settings . . . 64
Checking absence/presence of errors . . . 65
3.9 Related devices . . . 66
List of related devices . . . 66
Details of related devices . . . 67

CHAPTER 4 MC PROTOCOL 70

4.1 Function Summary . . . 70
4.2 Procedures before Operation . . . 71
4.3 System Configuration . . . 71
4.4 Specifications . . . 72
Communication specifications . . . 72
Link specifications . . . 72
4.5 Wiring . . . 74
Wiring procedure . . . 74
Selecting connection method . . . 74
Cable . . . 75
Termination resistor setting . . . 77
Connection diagram . . . 77
Grounding . . . 79
4.6 Communication Setting . . . 79
4.7 MC Protocol Command . . . 81
Command list . . . 81
Applicable device . . . 83
4.8 Troubleshooting . . . 84
Checking communication status based on LED indication . . . 84
Checking installation and wiring . . . 84
Checking sequence program . . . 85
Checking the communication setting . . . 85
Checking error codes . . . 85
4.9 Related Devices . . . 88
List of related devices . . . 88
Details of related devices . . . 88

CONTENTS

CHAPTER 5 INVERTER COMMUNICATION 92

5.1 Function Outline . . . 92
5.2 Procedure before Operation . . . 92
5.3 System Configuration . . . 93
5.4 Specifications . . . 93
Communication specifications . . . 93
Applicable inverter . . . 94
Inverter instruction codes and parameters . . . 94
Time required for inverter communication instructions . . . 96
5.5 Wiring . . . 100
Wiring procedure . . . 100
Connection method . . . 101
Cable . . . 103
Connection devices (RJ45 connector and distributor) . . . 105
Termination resistor setting . . . 106
Shielded wiring . . . 107
Connection diagram . . . 107
Grounding . . . 112
5.6 Inverter Communication Settings . . . 113
FREQROL-F800/A800 series . . . 113
FREQROL-F700P/A700 series . . . 115
FREQROL-F700PJ/E700/D700/E700EX series . . . 116
FREQROL-V500 series . . . 117
5.7 PLC Communication settings . . . 118
5.8 Programming . . . 120
Common items in inverter communication instructions . . . 120
Inverter operation monitoring instruction . . . 126
Inverter operation control instruction . . . 128
Inverter parameter read . . . 130
Inverter parameter write . . . 132
Inverter parameter block write . . . 134
Multiple inverter commands . . . 137
Second parameter specification code . . . 140
5.9 Troubleshooting . . . 143
Checking communication status based on LED display . . . 143
Checking installation . . . 143
Checking sequence program . . . 143
Checking the communication settings . . . 144
Checking absence/presence of errors . . . 144
5.10 Related Devices . . . 147
List of related devices . . . 147
Details of related devices . . . 148

CHAPTER 6 NON-PROTOCOL COMMUNICATION 152

6.1 Function Summary . . . 152
6.2 Procedure before Operation . . . 153
6.3 System Configuration . . . 153
6.4 Specifications . . . 154
6.5 Wiring . . . 154
Wiring procedure . . . 154

Cable . . . 154
Termination resistor setting . . . 156
Connection diagram . . . 157
Grounding . . . 159
6.6 Communication Settings . . . 159
6.7 Programming . . . 162
Serial data communication . . . 162
Operation of control line (RS-232C) . . . 173
Precautions for program creation . . . 176
6.8 Troubleshooting . . . 177
Checking communication status based on LED display . . . 177
Checking installation . . . 177
Checking sequence program. . . . 177
Checking the communication settings . . . 177
Caution on write during RUN, when RS2 instruction is driven . . . 177
Checking absence/presence of errors. . . . 177
6.9 Related Devices . . . 179
List of related devices . . . 179
Details of related devices . . . 180

CHAPTER 7 PREDEFINED PROTOCOL SUPPORT FUNCTION 188

7.1 Function Summary . . . 188
7.2 Procedure before Operation. . . . 189
7.3 System Configuration . . . 189
7.4 Specifications . . . 190
Communication specifications . . . 190
Predefined protocol specifications. . . . 190
Communication type . . . 191
Packet . . . 191
7.5 Communication Settings . . . 191
7.6 Protocol Setting. . . . 193
Adding protocols . . . 194
Configuring detailed setting of protocols . . . 195
Operations for protocol setting data . . . 196
7.7 Packet Setting . . . 198
Header. . . . 200
Terminator . . . 201
Length . . . 202
Static Data . . . 203
Non-conversion Variable . . . 204
Conversion Variable . . . 207
Check Code. . . . 212
Non-verified reception . . . 213
7.8 Programming . . . 215
Predefined protocol support instruction. . . . 215
Program example . . . 222
7.9 Troubleshooting . . . 224
Checking communication status based on LED display . . . 224
Checking installation . . . 224
Checking sequence program. . . . 224

Checking the communication settings 224
Checking absence/presence of errors 224
7.10 Related Devices 228
List of related devices 228
Details of related devices 229

APPENDIX 236

Appendix 1 Combined Use of Serial Communication 236
Appendix 2 Operation Image and Data Structure of Predefined Protocol 237
Operation image of each communication type 237
Verification operation 240
Data examples of Length 241
Data examples of Non-conversion Variable 243
Data examples of Conversion Variable 244
Data examples of Check Code 249
Data examples of Non-verified reception 255
Appendix 3 ASCII Code Table 256
Appendix 4 Added and Enhanced Functions 257

INDEX 258

REVISIONS 260
WARRANTY 261
TRADEMARKS 262

RELEVANT MANUALS

Manual name <manual number>	Description
MELSEC iQ-F FX5 User's Manual (Startup) <JY997D58201>	Performance specifications, procedures before operation, and troubleshooting of the CPU module.
MELSEC iQ-F FX5U User's Manual (Hardware) <JY997D55301>	Describes the details of hardware of the FX5U CPU module, including input/output specifications, wiring, installation, and maintenance.
MELSEC iQ-F FX5UC User's Manual (Hardware) <JY997D61401>	Describes the details of hardware of the FX5UC CPU module, including input/output specifications, wiring, installation, and maintenance.
MELSEC iQ-F FX5 User's Manual (Application) <JY997D55401>	Describes basic knowledge required for program design, functions of the CPU module, devices/labels, and parameters.
MELSEC iQ-F FX5 Programming Manual (Program Design) <JY997D55701>	Describes specifications of ladders, ST, FBD/LD, and other programs and labels.
MELSEC iQ-F FX5 Programming Manual (Instructions, Standard Functions/Function Blocks) <JY997D55801>	Describes specifications of instructions and functions that can be used in programs.
MELSEC iQ-F FX5 User's Manual (Serial Communication) <JY997D55901> (This manual)	Describes N:N network, Parallel link, MELSEC Communication protocol, inverter communication, non-protocol communication, and predefined protocol support.
MELSEC iQ-F FX5 User's Manual (MELSEC Communication Protocol) <JY997D60801>	Explains methods for the device that is communicating with the CPU module by MC protocol to read and write the data of the CPU module.
MELSEC iQ-F FX5 User's Manual (MODBUS Communication) <JY997D56101>	Describes MODBUS serial communication.
MELSEC iQ-F FX5 User's Manual (Ethernet Communication) <JY997D56201>	Describes the functions of the built-in Ethernet port communication function.
MELSEC iQ-F FX5 User's Manual (SLMP) <JY997D56001>	Explains methods for the device that is communicating with the CPU module by SLMP to read and write the data of the CPU module.
MELSEC iQ-F FX5 User's Manual (CC-Link IE) <JY997D64201>	Describes CC-Link IE field network module.
MELSEC iQ-F FX5 User's Manual (CC-Link) <SH-081793ENG>	Describes CC-Link system master/intelligent device module.
MELSEC iQ-F FX5 User's Manual (ASLINK) <SH-081796ENG>	Describes AnyWireASLINK system master module.
MELSEC iQ-F FX5 User's Manual (Positioning Control - CPU module built-in, High-speed pulse input/output module) <JY997D56301>	Describes the positioning function of the CPU module built-in and the high-speed pulse input/output module.
MELSEC iQ-F FX5 User's Manual (Positioning Control - Intelligent function module) <SH-081805ENG>	Describes the positioning module.
MELSEC iQ-F FX5 Simple Motion Module User's Manual (Startup) <IB0300251>	Specifications, procedures before operation, system configuration, wiring, and operation examples of the Simple Motion module.
MELSEC iQ-F FX5 Simple Motion Module User's Manual (Application) <IB0300253>	Functions, input/output signals, buffer memories, parameter settings, programming, and troubleshooting of the Simple Motion module.
MELSEC iQ-F FX5 Simple Motion Module User's Manual (Advanced Synchronous Control) <IB0300255>	Functions and programming for the synchronous control of the Simple Motion module.
MELSEC iQ-F FX5 User's Manual (Analog Control - CPU module built-in, Expansion adapter) <JY997D60501>	Describes the analog function of the CPU module built-in and the analog adapter.
MELSEC iQ-F FX5 User's Manual (Analog Control - Intelligent function module) <SH-081802ENG>	Describes the multiple input module (voltage, current, thermocouple, and resistance temperature detector).
MELSEC iQ-F FX5 User's Manual (Temperature Control) <SH-081799ENG>	Describes the temperature control module.
GX Works3 Operating Manual <SH-081215ENG>	System configuration, parameter settings, and online operations of GX Works3.
Transition from MELSEC FX3U, FX3UC Series to MELSEC iQ-F Series Handbook <JY997D66201>	Describes the transition from MELSEC FX3U/FX3UC series to MELSEC iQ-F series.

TERMS

Unless otherwise specified, this manual uses the following terms.
For details on the FX3 devices that can be connected with the FX5, refer to the User's Manual (Hardware) of the CPU module to be used.

Terms	Description
■Devices	
FX5	Generic term for FX5U and FX5UC PLCs
FX3	Generic term for FX3S, FX3G, FX3GC, FX3U, and FX3UC PLCs
FX5 CPU module	Generic term for FX5U CPU module and FX5UC CPU module
FX5U CPU module	Generic term for FX5U-32MR/ES, FX5U-32MT/ES, FX5U-32MT/ESS, FX5U-64MR/ES, FX5U-64MT/ES, FX5U-64MT/ESS, FX5U-80MR/ES, FX5U-80MT/ES, FX5U-80MT/ESS, FX5U-32MR/DS, FX5U-32MT/DS, FX5U-32MT/DSS, FX5U-64MR/DS, FX5U-64MT/DS, FX5U-64MT/DSS, FX5U-80MR/DS, FX5U-80MT/DS, and FX5U-80MT/DSS
FX5UC CPU module	Generic term for FX5UC-32MT/D, FX5UC-32MT/DSS, FX5UC-64MT/D, FX5UC-64MT/DSS, FX5UC-96MT/D, and FX5UC-96MT/DSS
Extension module	Generic term for FX5 extension modules and FX3 function modules
• FX5 extension module	Generic term for I/O modules, FX5 extension power supply modules, and FX5 intelligent function modules
• FX3 extension module	Generic term for FX3 extension power supply module and FX3 intelligent function module
• Extension module (extension cable type)	Generic term for Input modules (extension cable type), Output modules (extension cable type), Input/output modules (extension cable type), Powered input/output module, High-speed pulse input/output module, Extension power supply module (extension cable type), Connector conversion module (extension cable type), Intelligent function modules, and Bus conversion module (extension cable type)
• Extension module (extension connector type)	Generic term for Input modules (extension connector type), Output modules (extension connector type), Input/output modules (extension connector type), Extension power supply module (extension connector type), Connector conversion module (extension connector type), and Bus conversion module (extension connector type)
I/O module	Generic term for Input modules, Output modules, Input/output modules, Powered input/output modules, and High-speed pulse input/output modules
Input module	Generic term for Input modules (extension cable type) and Input modules (extension connector type)
• Input module (extension cable type)	Generic term for FX5-8EX/ES and FX5-16EX/ES
• Input module (extension connector type)	Generic term for FX5-C16EX/D, FX5-C16EX/DS, FX5-C32EX/D, and FX5-C32EX/DS
Output module	Generic term for Output modules (extension cable type) and Output modules (extension connector type)
• Output module (extension cable type)	Generic term for FX5-8EYR/ES, FX5-8EYT/ES, FX5-8EYT/ESS, FX5-16EYR/ES, FX5-16EYT/ES, and FX5-16EYT/ESS
• Output module (extension connector type)	Generic term for FX5-C16EYT/D, FX5-C16EYT/DSS, FX5-C32EYT/D, and FX5-C32EYT/DSS
Input/output module	Generic term for Input/output modules (extension cable type) and Input/output modules (extension connector type)
• Input/output module (extension cable type)	Generic term for FX5-16ER/ES, FX5-16ET/ES, and FX5-16ET/ESS
• Input/output module (extension connector type)	Generic term for FX5-C32ET/D and FX5-C32ET/DSS
Powered input/output module	Generic term for FX5-32ER/ES, FX5-32ET/ES, FX5-32ET/ESS, FX5-32ER/DS, FX5-32ET/DS, and FX5-32ET/DSS
High-speed pulse input/output module	Generic term for FX5-16ET/ES-H and FX5-16ET/ESS-H
Extension power supply module	Generic term for FX5 extension power supply module and FX3 extension power supply module
• FX5 extension power supply module	Generic term for FX5 extension power supply module (extension cable type) and FX5 extension power supply module (extension connector type)
• FX5 extension power supply module (extension cable type)	Different name for FX5-1PSU-5V
• FX5 extension power supply module (extension connector type)	Different name for FX5-C1PS-5V
• FX3 extension power supply module	Different name for FX3U-1PSU-5V
Intelligent module	The abbreviation for intelligent function modules
Intelligent function module	Generic term for FX5 intelligent function modules and FX3 intelligent function modules
• FX5 intelligent function module	Generic term for FX5-8AD, FX5-4LC, FX5-20PG-P, FX5-40SSC-S, FX5-80SSC-S, FX5-CCLIEF, FX5-CCL-MS, and FX5-ASL-M

Terms	Description
• FX3 intelligent function module	Generic term for FX3U-4AD, FX3U-4DA, FX3U-4LC, FX3U-1PG, FX3U-2HC, FX3U-16CCL-M, FX3U-64CCL, and FX3U-128ASL-M
Expansion board	Generic term for board for FX5U CPU module
• Communication board	Generic term for FX5-232-BD, FX5-485-BD, and FX5-422-BD-GOT
Expansion adapter	Generic term for adapter for FX5 CPU module
• Communication adapter	Generic term for FX5-232ADP and FX5-485ADP
• Analog adapter	Generic term for FX5-4AD-ADP, FX5-4DA-ADP, FX5-4AD-PT-ADP, and FX5-4AD-TC-ADP
Bus conversion module	Generic term for Bus conversion module (extension cable type) and Bus conversion module (extension connector type)
• Bus conversion module (extension cable type)	Different name for FX5-CNV-BUS
• Bus conversion module (extension connector type)	Different name for FX5-CNV-BUSC
Connector conversion module	Generic term for Connector conversion module (extension cable type) and Connector conversion module (extension connector type)
• Connector conversion module (extension cable type)	Different name for FX5-CNV-IF
• Connector conversion module (extension connector type)	Different name for FX5-CNV-IFC
Extended extension cable	Generic term for FX5-30EC and FX5-65EC
Connector conversion adapter	Different name for FX5-CNV-BC
Battery	Different name for FX3U-32BL
Peripheral device	Generic term for engineering tools and GOTs
GOT	Generic term for Mitsubishi Electric Graphic Operation Terminal GOT1000 and GOT2000 series
■Software packages	
Engineering tool	The product name of the software package for the MELSEC programmable controllers
GX Works3	The product name of the software package, SWnDND-GXW3, for the MELSEC programmable controllers (The 'n' represents a version.)
■Communication	
Built-in RS-485 port	Built-in RS-485 port of the CPU module.
Serial port	Generic term for FX5 Series built-in RS-485 port (CH1), communication board (CH2), communication adapter 1 (CH3), and communication adapter 2 (CH4) (4 ports)
Counterpart device	Generic term for device with which communication is conducted. (PC, indicators, etc.)

1 OUTLINE

The table below shows the serial communication types supported by the FX5.

Communication functions	Function	Reference section
N:N Network	Up to eight PLCs are connected, and data is automatically transferred among them.	Page 16
Parallel link	Function for connecting two FX5 PLCs and mutually linking devices.	Page 50
MC protocol	MC protocol is used to access CPU module and external devices (PC, GOT, etc.) from equipment that supports MC protocol via Ethernet or serial communication. The serial port of the FX5 is capable of communication with MC protocol 3C/4C frame.	Page 70
Inverter communication	An FX PLC can control up to 16 inverters via RS-485 communication.	Page 92
Non-protocol communication	Non-protocol serial communication is available between an FX PLC and RS-232C/RS-485 interface equipment such as bar code reader, printer, personal computer and measuring instrument.	Page 152
Predefined protocol support	Data can be sent and received between the counterpart device and CPU module with a protocol appropriate to the counterpart device (such as measuring instrument or barcode reader).	Page 188

2 N:N NETWORK

This chapter explains the N:N Network.

2.1 Outline of System

N:N Network allows connection of up to eight FX5 PLCs or FX3 PLCs via mutually linked devices through communication in accordance with RS-485.

- One of three patterns can be selected according to the number of devices to be linked.
- Data link is automatically updated between up to eight FX5 PLCs or FX3 PLCs.
- The total extension distance is 1200m maximum. (only when the FX5-485ADP is used in the configuration)
- FX5 PLCs can set head device number for internal relay (M) and data register (D) for link.

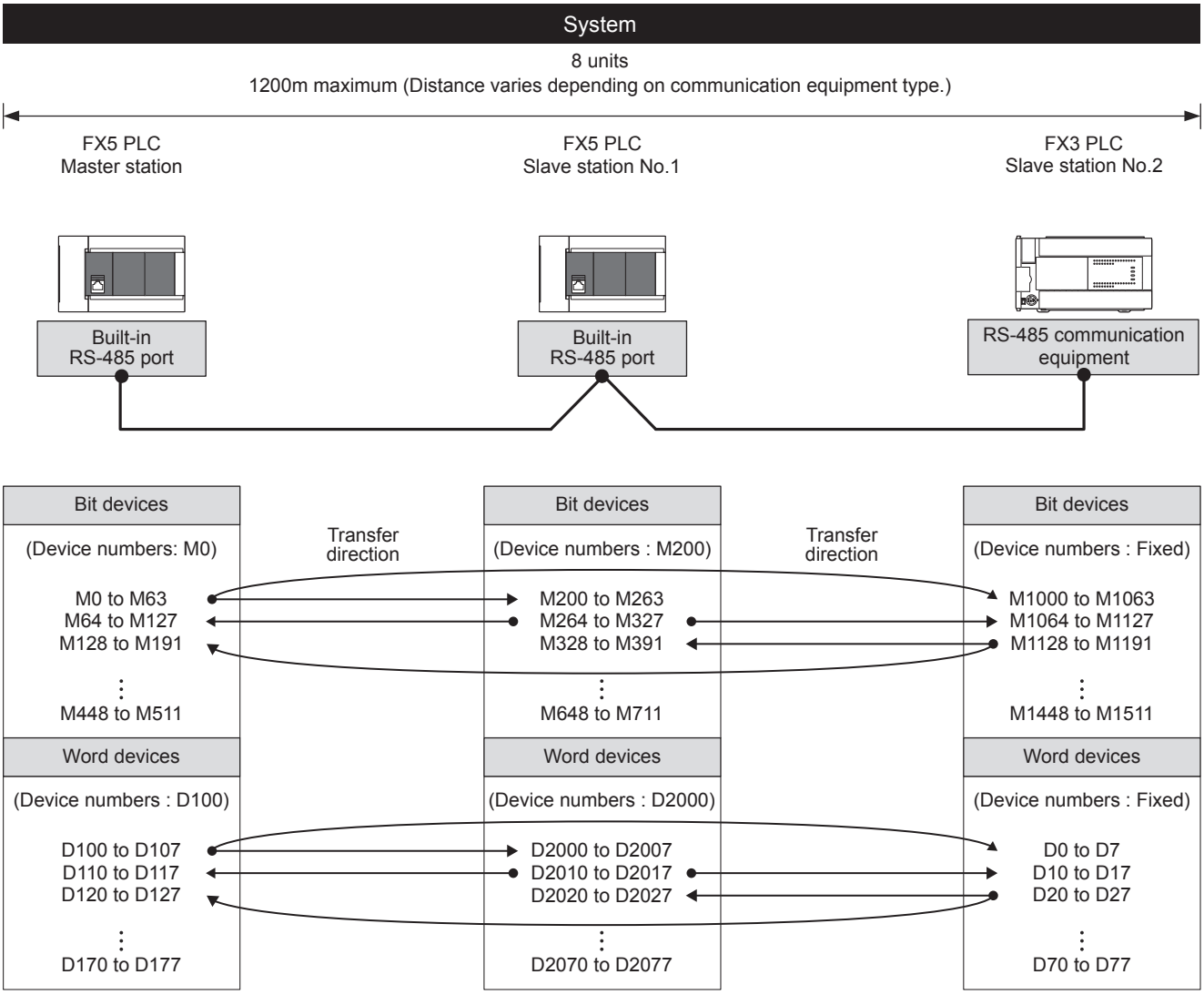

The link information can be monitored in the master station and all slave stations.

The figure above shows the maximum number of linked devices. There are differences in specification depending on the selected link pattern and FX Series.

2.2 Procedures before Operation

The flow chart below shows the N:N Network setting procedures up until data link:

1. Check communication specifications

For communication specifications, link specifications, link pattern and number of link points, and link time, refer to ☞ Page 18 Specifications.

2. System configuration and selection

For system configuration, and select communication equipment, refer to ☞ Page 17 System Configuration.

3. Wiring

For wiring with twisted pair cable, and wiring example, refer to ☞ Page 21 Wiring.

4. Communication settings*1

For communication settings of communication device, refer to ☞ Page 24 Communication Setting.

5. Program creation

For communication test program, master station program, and slave station program, refer to ☞ Page 27 Programming.

*1 For more details about the connection and operation methods between the engineering tool (GX Works3) and PLC, refer to the manual below.
GX Works3 Operating Manual

2.3 System Configuration

This section outlines the system configuration required to use the N:N Network.

You can use the N:N Network function in the CPU module using the built-in RS-485 port, communication board, and communication adapter.

Allotment of serial ports is set to the following fixed numbers, regardless of system configuration.

■FX5U CPU module

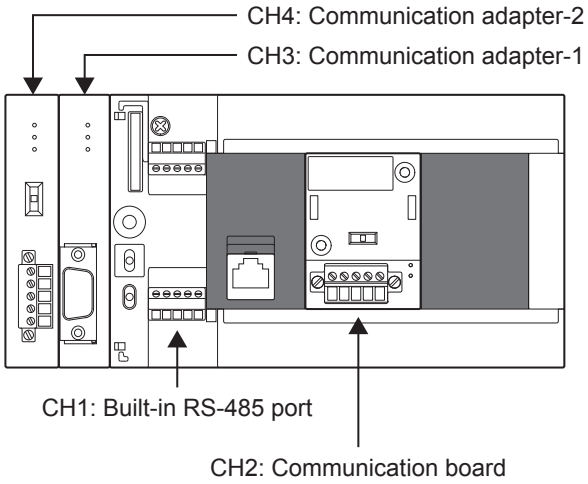

■FX5UC CPU module

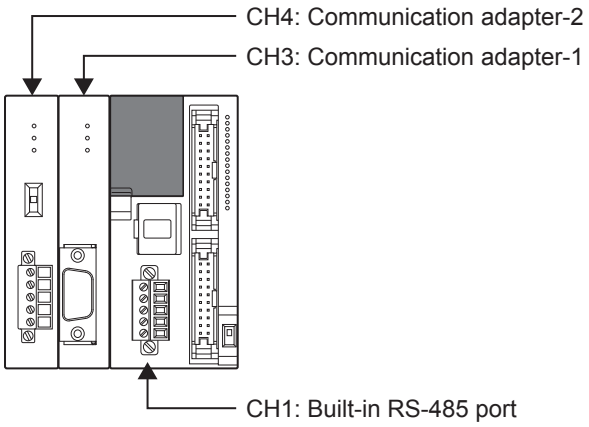

Communication device

		Serial port	Important points in selection	Overall distance
Built-in RS-485 port		CH1	Since it is built-into the CPU module, there is no need to add equipment.	50 m or less
Communication board	FX5-485-BD	CH2	Mounted on top of the CPU module, there is no change in the installation space requirements.	50 m or less
Communication adapter	FX5-485ADP	CH3, CH4*1	Mount the communication adapter to the left of the CPU module.	1200 m or less

*1 Assign CH3 and CH4 in the order from the adapter closest to CPU module.

For the FX3 system configuration, refer to FX Series User's Manual - Data Communication Edition.

Restriction

In N:N Network, only one channel is available to use for one CPU module.

2.4 Specifications

This section describes the communication specifications and performance of the N:N Network function.

For the specifications of FX3 PLC, refer to FX Series User's Manual - Data Communication Edition.

Communication specifications

The N:N Network function is executed according to the communication specifications (fixed) shown in the table below.

Specification items such as baud rate cannot be changed.

Items		Specifications	Remarks
Number of connectable units		Maximum of 8	—
Transmission standard		RS-485 standard	—
Maximum overall distance		When only FX5-485ADP is used in the configuration: 1200 m or less When configuring with FX5-485ADP or FX3U-485ADP: 500 m or less Other than the above configuration: 50 m or less	When the built-in RS-485 port, FX5-485-BD and 485-BD for FX3 Series are all connected: 50 m or less
Protocol type		N:N Network	—
Control procedure		—	—
Communication method		Half-duplex, bi-directional communication	—
Baud rate		38400 bps	—
Character format	Start bit	1 bit	—
	Data length	7 bit	—
	Parity bit	Even	—
	Stop bit	1 bit	—
Header		Fixed	—
Terminator		Fixed	—
Control line		—	—
Sum check		Fixed	—

Link specifications

Link pattern and number of link points

Settings of the link pattern are performed with GX Works3 Serial Communication setting. (☞ Page 24 Communication Setting)

The number of occupied points of the link device differ depending on the number of link patterns and local stations to be used. The devices to be occupied are assigned according to the head number of the link device.

When an FX3 PLC are used, even if the link device numbers are different from that of FX5 PLC (the link device numbers of FX3 PLC are fixed), the link devices corresponding to its station number are linked.

Station number		Model	Pattern 0		Pattern 1		Pattern 2	
			Internal relay (M)	Data register (D)	Internal relay (M)	Data register (D)	Internal relay (M)	Data register (D)
			0 points	4 in each station	32 in each station	4 in each station	64 in each station	8 in each station
Master station	Station No. 0	FX5	—	D (x) to D (x+3)	M (y) to M (y+31)	D (x) to D (x+3)	M (y) to M (y+63)	D (x) to D (x+7)
		FX3		D0 to D3	M1000 to M1031	D0 to D3	M1000 to M1063	D0 to D7
Slave stations	Station No. 1	FX5	—	D (x+10) to D (x+13)	M (y+64) to M (y+95)	D (x+10) to D (x+13)	M (y+64) to M (y+127)	D (x+10) to D (x+17)
		FX3		D10 to D13	M1064 to M1095	D10 to D13	M1064 to M1127	D10 to D17
	Station No. 2	FX5	—	D (x+20) to D (x+23)	M (y+128) to M (y+159)	D (x+20) to D (x+23)	M (y+128) to M (y+191)	D (x+20) to D (x+27)
		FX3		D20 to D23	M1128 to M159	D20 to D23	M1128 to M1191	D20 to D27
	Station No. 3	FX5	—	D (x+30) to D (x+33)	M (y+192) to M (y+223)	D (x+30) to D (x+33)	M (y+192) to M (y+255)	D (x+30) to D (x+37)
		FX3		D30 to D33	M1192 to M1223	D30 to D33	M1192 to M1255	D30 to D37
	Station No. 4	FX5	—	D (x+40) to D (x+43)	M (y+256) to M (y+287)	D (x+40) to D (x+43)	M (y+256) to M (y+319)	D (x+40) to D (x+47)
		FX3		D40 to D43	M1256 to M1287	D40 to D43	M1256 to M1319	D40 to D47
	Station No. 5	FX5	—	D (x+50) to D (x+53)	M (y+320) to M (y+351)	D (x+50) to D (x+53)	M (y+320) to M (y+383)	D (x+50) to D (x+57)
		FX3		D50 to D53	M1320 to M1651	D50 to D53	M1320 to M1383	D50 to D57
	Station No. 6	FX5	—	D (x+60) to D (x+63)	M (y+384) to M (y+415)	D (x+60) to D (x+63)	M (y+384) to M (y+447)	D (x+60) to D (x+67)
		FX3		D60 to D63	M1384 to M1415	D60 to D63	M1384 to M1447	D60 to D67
	Station No. 7	FX5	—	D (x+70) to D (x+73)	M (y+448) to M (y+479)	D (x+70) to D (x+73)	M (y+448) to M (y+511)	D (x+70) to D (x+77)
		FX3		D70 to D73	M1448 to M1479	D70 to D73	M1448 to M1511	D70 to D77

x: Link device head number of data register (D)
y: Link device head number of internal relay (M)

Precautions

When creating a program, do not change the information in devices used by other stations. If such information is changed, the other stations will not operate normally.

Ex.

Refresh range: pattern 1, link device head number: all station D1000/M4000

Master station: FX5 PLC, slave station: FX5 PLC × 3

Station number		Master station	Slave stations		
		Station No. 0 (FX5 PLC)	Station No. 1 (FX5 PLC)	Station No. 2 (FX5 PLC)	Station No. 3 (FX5 PLC)
Master station	Station No. 0	D1000 to D1003 M4000 to M4031	D1000 to D1003 M4000 to M4031	D1000 to D1003 M4000 to M4031	D1000 to D1003 M4000 to M4031
Slave stations	Station No. 1	D1010 to D1013 M4064 to M4095	D1010 to D1013 M4064 to M4095	D1010 to D1013 M4064 to M4095	D1010 to D1013 M4064 to M4095
	Station No. 2	D1020 to D1023 M4128 to M4159	D1020 to D1023 M4128 to M4159	D1020 to D1023 M4128 to M4159	D1020 to D1023 M4128 to M4159
	Station No. 3	D1030 to D1033 M4192 to M4223	D1030 to D1033 M4192 to M4223	D1030 to D1033 M4192 to M4223	D1030 to D1033 M4192 to M4223

In the example above, devices from D1000 to D1033 (34 points from the head device number of D) and from M4000 to M4223 (224 points from the head device number of M) are occupied. Other devices can be used as general control devices.

Link devices for unconnected slave stations can be used as general control devices; however, it is recommended to save the unoccupied link devices for the slave stations to be used in the future.

Ex.

Refresh range: pattern 2, Link device head number: station 0 (D200/M2000), station 2 (D500/M3000)

Master station: FX5 PLC, slave station: FX5 PLC × 1/FX3 PLC × 2

Station number		Master station	Slave stations		
		Station No. 0 (FX5 PLC)	Station No. 1 (FX3 PLC)	Station No. 2 (FX5 PLC)	Station No. 3 (FX3 PLC)
Master station	Station No. 0	D200 to D207 M2000 to M2063	D0 to D7 M1000 to M1063	D500 to D507 M3000 to M3063	D0 to D7 M1000 to M1063
Slave stations	Station No. 1	D210 to D217 M2064 to M2127	D10 to D17 M1064 to M1127	D510 to D517 M3064 to M3127	D10 to D17 M1064 to M1127
	Station No. 2	D220 to D227 M2128 to M2191	D20 to D27 M1128 to M1191	D520 to D527 M3128 to M3191	D20 to D27 M1128 to M1191
	Station No. 3	D230 to D237 M2192 to M2255	D30 to D37 M1192 to M1255	D530 to D537 M3192 to M3255	D30 to D37 M1192 to M1255

The link devices are allocated as above and the link device numbers are different according to the station number (for the FX3 series, the numbers are fixed). However, the link device numbers are linked to the corresponding devices.

The link device head number of FX5 PLC can be set individually for each station; however, unifying the numbers in the system is recommended to prevent disordered numbers.

Link time

The link time indicates the cycle time from the start of parameter message editing until link devices are updated and parameter message editing is restarted.

The link time varies depending on the number of linked units (master station and slave stations) and the number of linked devices as shown in the table below.

Number of linked units	Pattern 0	Pattern 1	Pattern 2
	0 bit-device (M) 4 word-devices (D)	32 bit-devices (M) 4 word-devices (D)	64 bit-devices (M) 8 word-devices (D)
2	20 ms	24 ms	37 ms
3	29 ms	35 ms	52 ms
4	37 ms	45 ms	70 ms
5	46 ms	56 ms	87 ms
6	54 ms	67 ms	105 ms
7	63 ms	78 ms	122 ms
8	72 ms	88 ms	139 ms

2.5 Wiring

This section explains about the wiring.
For the wiring of FX3 PLC, refer to FX Series User's Manual - Data Communication Edition.

Wiring procedure

1. Preparing for wiring

Prepare cables required for wiring. (☞ Page 21 Cable)

2. Turn OFF the PLC power

Before wiring, make sure that the PLC power is OFF.

3. Wire the communication equipment.

Connect the RS-485 communication equipment. (☞ Page 23 Connection diagram)

Cable

Select cables using the procedure described below.

Twisted pair cable

Use shielded twisted pair cables for connecting RS-485 communication equipment.
The specifications of the cables used in wiring are shown.

■RS-485 cable specifications

Items	Descriptions
Cable type	Shielded cable
Number of pairs	2p, 3p
Conductor resistance (20℃)	88.0 Ω/km or less
Insulation resistance	10000 MΩ-km or more
Voltage resistance	500 V DC, 1 minute
Electrostatic capacitance (1 kHz)	60 nF/km or less by an average
Characteristic impedance (100 kHz)	110±10 Ω

■Cable structural drawing (reference)

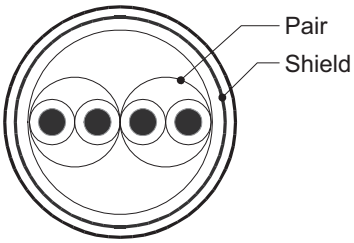

Example of two-pair cable structural drawing

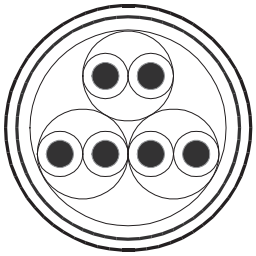

Example of three-pair cable structural drawing

Connecting cables

The table below shows applicable cables and tightening torques.

	Number of wires connected per terminal	Wire size		Tightening torque
		Solid wire, Stranded wire	Wire ferrule with insulation sleeve	
FX5U CPU module built-in RS-485 port	One wire	0.2 to 0.5 mm^2 (AWG24 to 20)	0.2 to 0.5 mm^2 (AWG24 to 20)	0.22 to 0.25 N·m
	Two wires	0.2 mm^2 (AWG24)	—	
FX5UC CPU module built-in RS-485 port FX5-485-BD FX5-485ADP	One wire	0.3 to 0.5 mm^2 (AWG22 to 20)	0.3 to 0.5 mm^2 (AWG22 to 20)	
	Two wires	0.3 mm^2 (AWG22)	—	

Precautions

Do not tighten terminal screws exceeding the specified torque range. Failure to do so may cause equipment failures or malfunctions.

■Wire end treatment

With regard to the cable end treatment, use a stranded cable or solid cable as is, or use a wire ferrule with insulating sleeve.

- When using a stranded cable or solid cable as is

- Twist the end of stranded wire and make sure that there are no loose wires.
- Please do not solder plate the ends of the cable.

Dimensions of the cable end	
FX5U CPU module built-in RS-485 port	**FX5UC CPU module built-in RS-485 port, FX5-485-BD, FX5-485ADP**
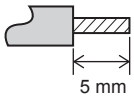	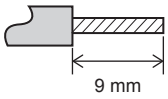

- When using a wire ferrule with insulation sleeve

Because it is difficult to insert a cable into an insulating sleeve depending on the thickness of the cable sheath, select the proper cable according to the outline drawing.

FX5U CPU module built-in RS-485 port	FX5UC CPU module built-in RS-485 port, FX5-485-BD, FX5-485ADP
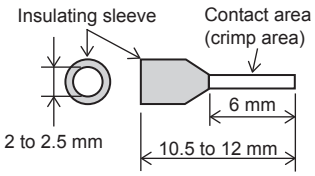	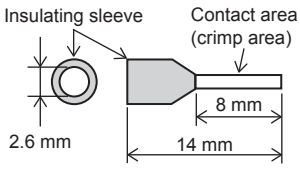

<Reference>

	Manufacturer	Model name	Crimping tool
FX5U CPU module built-in RS-485 port	PHOENIX CONTACT GmbH & Co. KG	AI 0.5-6WH	CRIMPFOX 6 CRIMPFOX 6T-F
FX5UC CPU module built-in RS-485 port FX5-485-BD FX5-485ADP		AI 0.5-8WH	

- Tool

For tightening the terminal, use a commercially available small screwdriver with straight tip that is not widened toward the end as shown below.

■Precautions

If the diameter of the screwdriver tip is too small, the required tightening torque cannot be achieved. To achieve the appropriate tightening torque shown in the previous page, use the following screwdriver or its equivalent (grip diameter: approximately 25 mm).

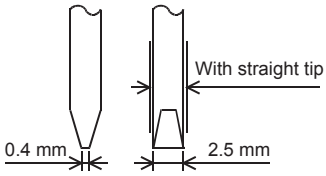

<Reference>

Manufacturer	Model name
PHOENIX CONTACT GmbH & Co. KG	SZS 0.4×2.5

Termination resistor setting

Make sure to provide a termination resistor at both ends of the wire.

The built-in RS-485 port, FX5-485-BD and FX5-485ADP have a built-in termination resistor.

Set the termination resistor selector switch to 110 Ω.

■FX5U CPU module built-in RS-485 port

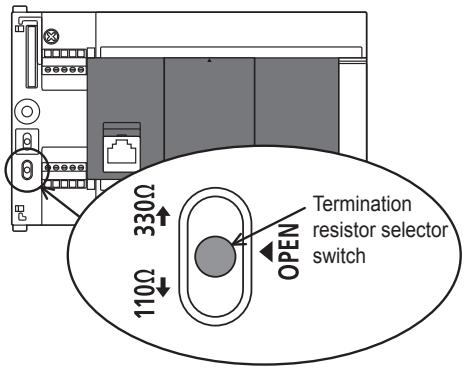

■FX5UC CPU module built-in RS-485 port

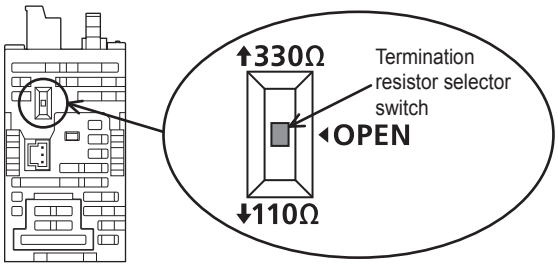

■FX5-485-BD

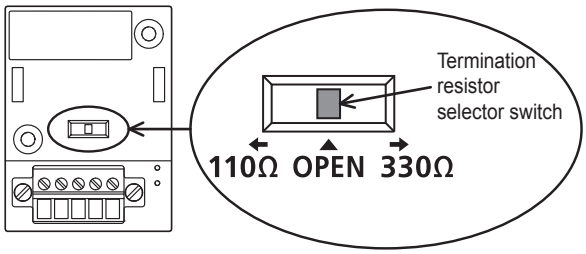

■FX5-485ADP

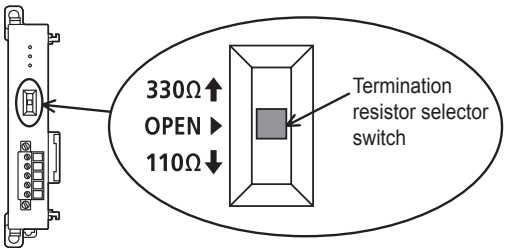

Connection diagram

Use one-pair wiring for an N:N Network.

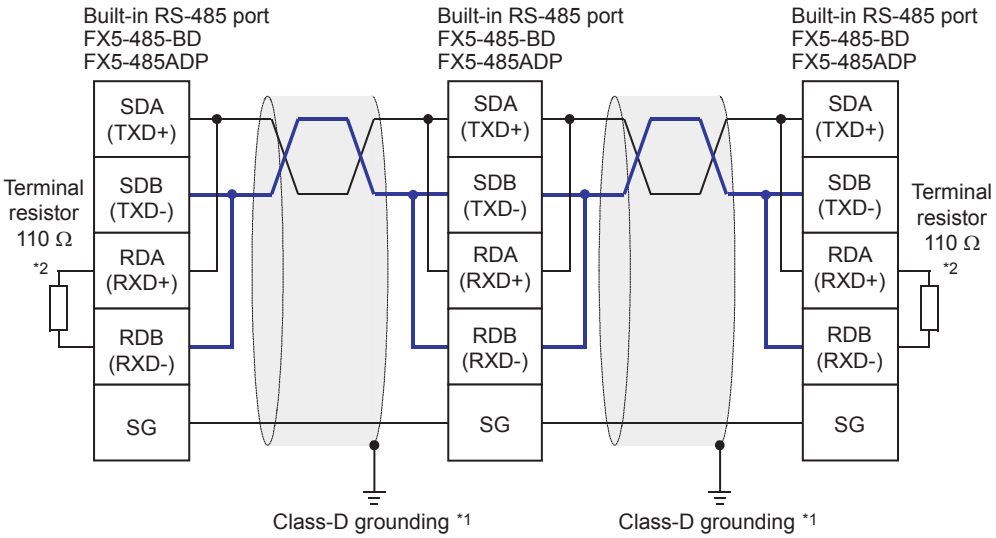

*1 Make sure to perform Class-D grounding on the shield of the twisted pair cable to be connected.

*2 Make sure to provide a termination resistor at both ends of the wire. The built-in RS-485 port, FX5-485-BD and FX5-485ADP have built-in termination resistors. Set the termination resistor selector switch to 110 Ω.

Grounding

Grounding should be performed as stated below.

- Perform D class grounding. (grounding resistance: 100 Ω or less)
- Independent grounding should be performed for best results.

When the independent grounding can not be performed, perform "shared grounding" as shown in the following figure.

For details, refer to the following.

📖MELSEC iQ-F FX5U User's Manual (Hardware)
📖MELSEC iQ-F FX5UC User's Manual (Hardware)

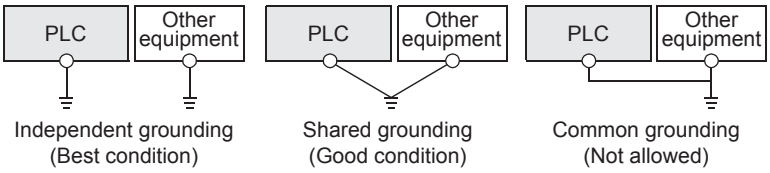

- The grounding wire size should be AWG 14 (2 mm^2) or larger.
- Bring the grounding point close to the PLC as much as possible so that the ground cable can be shortened.

2.6 Communication Setting

For the FX5 communication settings of this function, parameters are set using GX Works3. For details about GX Works3, refer to 📖GX Works3 Operating Manual.

Setting of parameter differs according to the module used. The procedure for each module is as follows.

For the communication settings of FX3 PLC, refer to FX Series User's Manual - Data Communication Edition.

Built-in RS-485 port (CH1)

Navigation Window ⇨ Parameter ⇨ FX5UCPU ⇨ Module Parameter ⇨ 485 Serial Port

Window

The following screen will be displayed if [N:N Network] is set for the communication protocol type.

■Basic Settings

Item	Setting
⊟ *Communication Protocol Type*	Set communication protocol type.
Communication Protocol Type	N:N Network

■Fixed Setting

Item	Setting
⊟ *Host Station No.*	Set host station No.
Host Station No.	0(Master)
⊟ Total Number of Local Station	Set connection number of the local station.
Total Number of Local Station	7
⊟ Refresh Range	Set the pattern of the device mark that wants to communicate.
Refresh Range	0
⊟ Timeout Retry Count Setting	Set the retry counts when there is no local broadcasting station response, and time is out.
Timeout Retry Count Setting	3
⊟ Monitoring Time	Set time-out period.
Monitoring Time	50 ms

■Link Device

Item	Setting
⊟ *Link Device Bit*	Set top number of the bit device for links.
Device	M1000
⊟ Link Device Word	Set top number of the word device for links.
Device	D0

■SM/SD Setting

Item	Setting
⊟ *Latch Setting*	**Set the latch of SM/SD device.**
Host Station No.	Do Not Latch
Total Number of Local Station	Do Not Latch
Refresh Range	Do Not Latch
Timeout Retry Count Setting	Do Not Latch
Monitoring Time	Do Not Latch
⊟ **FX3 Series Compatibility**	**The SM/SD device of FX3 series compatibility.**
SM/SD for Compatible	Disable

Communication board (CH2)

Navigation Window ⇨ Parameter ⇨ FX5UCPU ⇨ Module Parameter ⇨ Extended Board

Window

The following screen will be displayed if [FX5-485-BD] is set for the extended board and [N:N Network] is set for the communication protocol type. Fixed setting and SM/SD setting are the same as in the case of built-in RS-485 port (CH1).

■Basic Settings

Item	Setting
⊟ *Extended Board*	**Set the extended board type.**
Extended Board	FX5-485-BD
⊟ **Communication Protocol Type**	**Set communication protocol type.**
Communication Protocol Type	N:N Network

Communication adapter (CH3/CH4)

When an expansion adapter is used, add expansion adapter to Module Information.

Navigation window ⇨ Parameter ⇨ Module Information ⇨ Right-click ⇨ Add New Module

After adding the expansion adapter, make settings on the screen displayed from the following operation.

Navigation window ⇨ Parameter ⇨ Module Information ⇨ ADP1 to ADP6 (Communication adapter) ⇨ Module Parameter

Window

Each setting screen is the same as in the case of built-in RS-485 port (CH1).

Parameter setting details

Set the following items for the serial ports that use N:N Network. However, only one channel can be set to the N:N Network.

	Items		Setting value	Reference section
Basic Settings	Extended Board*1		When using this function, select [FX5-485-BD].	—
	Communication Protocol Type		When using this function, select [N:N Network].	
Fixed Setting	Host Station No.		0(Master) 1 to 7: (Slave station)	Page 19
	Total Number of Local Station		1 to 7	
	Refresh Range		0: pattern 0 1: pattern 1 2: pattern 2	
	Timeout Retry Count Setting		0 to 10	—
	Monitoring Time		50 to 2550 (ms)	—
Link Device	Link Device Bit		M0 to M32767	Page 19
	Link Device Word		D0 to D7999	
SM/SD Setting	Latch Setting	Host Station No.	Latch/Do Not Latch	Refer to the following
		Total Number of Local Station		
	FX3 Series Compatibility	SM/SD for Compatible	Disable/CH1/CH2	

*1 Only in the case of communication board (CH2).

The following settings are unnecessary (fixed values).

Items	Descriptions
Data length	7 bit
Parity	Even
Stop bit	1 bit
Start bit	1 bit
Baud rate	38400 bps
Header	Not added
Terminator	Not added
Control mode	None
Sum check code	Not added
Control procedure	CR and LF are not added

FX3 Series-compatible SM/SD

When using the FX3 Series compatible SM/SD storage area, set to use special devices for either the FX3 Series CH1 or CH2.

FX3 Series compatible devices corresponding to the specified channel can be used.

For details, refer to the following.

☞ Page 38 Related Devices

Latch Setting

Set the necessity of the corresponding SD (special register) latch.

Descriptions	Setting range	Compatible devices
Station number settings	Latch/Do Not Latch	SM9080
Slave station quantity setting	Latch/Do Not Latch	SM9081

2.7 Programming

This section explains how to set the N:N Network and how to create programs.
Configuration only for FX5 PLC configuration (master station + slave station × 7 stations)
In N:N Network, pattern 0, 1 or 2 can be set according to the refresh range value.
The number of used devices varies depending on the pattern.
About FX5 PLC program and communication test, refer to FX Series User's Manual - Data Communication Edition.

Communication setting

Serial communication setting are as follows. (☞ Page 24 Communication Setting)

Items		Setting							
		Master station	Slave stations						
		Station No. 0	Station No. 1	Station No. 2	Station No. 3	Station No. 4	Station No. 5	Station No. 6	Station No. 7
Protocol type		N:N Network							
Fixed Setting	Host Station No.	0	1	2	3	4	5	6	7
	Total Number of Local Station	7	—	—	—	—	—	—	—
	Refresh Range	1*1	—	—	—	—	—	—	—
	Timeout Retry Count Setting	3	—	—	—	—	—	—	—
	Monitoring Time	50	—	—	—	—	—	—	—
Link Device	Link Device Bit*2	M4000	M4000	M4000	M4000	M4000	M4000	M4000	M4000
	Link Device Word*2	D1000	D1000	D1000	D1000	D1000	D1000	D1000	D1000

*1 Execute communication test on the following settings: slave station quantity setting: 7 (Station No. 7), refresh range setting: 0 (pattern 0).
*2 Devices can be set individually to each station.

Contents of related devices

The device used in the program are shown below. (☞ Page 38 Related Devices)

Devices for determining errors in the N:N Network

These devices are used for determining errors in the N:N Network. Use these devices to output the link errors or use them in interlock sequence programs.

FX5 only				FX3 Series compatible		Name	Descriptions
CH1	CH2	CH3	CH4	CH1	CH2		
SM8500	SM8510	SM8520	SM8530	SM8063	SM8438	Serial communication error	Turns ON when serial communication error occurred.
SM9040				SM8183		Data transfer sequence error	Turns ON when a data transfer sequence error occurred in the master station.
SM9041 to SM9047*1				SM8184 to SM8190*2		Data transfer sequence error	Turns ON when a data transfer sequence error occurred in the other slave stations. However, data sequence errors that occurred in the local station (slave station) cannot be detected.
SM9056				SM8191		Data transfer sequence ON	Remains ON while the N:N Network is operating.

*1 Station number 1: SM9041, station number 2: SM9042, station number 3: SM9043…station number 7: SM9047
*2 Station number 1: SM8184, station number 2: SM8185, station number 3: SM8186…station number 7: SM8190

Link device

The devices are assigned according to the set pattern in the refresh range setting as the following set device number (All stations, bit device (M): 4000, word device (D): 1000) set at the head. (☞ Page 19 Link specifications)

■Pattern 0

Station number	Master station	Slave stations						
	Station No. 0	Station No. 1	Station No. 2	Station No. 3	Station No. 4	Station No. 5	Station No. 6	Station No. 7
Word devices (4 points for each station)	D1000 to D1003	D1010 to D1013	D1020 to D1023	D1030 to D1033	D1040 to D1043	D1050 to D1053	D1060 to D1063	D1070 to D1073

■Pattern 1

Station number	Master station	Slave stations						
	Station No. 0	Station No. 1	Station No. 2	Station No. 3	Station No. 4	Station No. 5	Station No. 6	Station No. 7
Bit devices (32 points for each station)	M4000 to M4031	M4064 to M4095	M4128 to M4159	M4192 to M4223	M4256 to M4287	M4320 to M4351	M4384 to M4415	M4448 to M4479
Word devices (4 points for each station)	D1000 to D1003	D1010 to D1013	D1020 to D1023	D1030 to D1033	D1040 to D1043	D1050 to D1053	D1060 to D1063	D1070 to D1073

■Pattern 2

Station number	Master station	Slave stations						
	Station No. 0	Station No. 1	Station No. 2	Station No. 3	Station No. 4	Station No. 5	Station No. 6	Station No. 7
Bit devices (64 points for each station)	M4000 to M4063	M4064 to M4127	M4128 to M4191	M4192 to M4255	M4256 to M4319	M4320 to M4383	M4384 to M4447	M4448 to M4511
Word devices (8 points for each station)	D1000 to D1007	D1010 to D1017	D1020 to D1027	D1030 to D1037	D1040 to D1047	D1050 to D1057	D1060 to D1067	D1070 to D1077

Precautions

When creating a program, do not change the information in devices used by other stations. If such information is changed, the other stations will not operate normally.

Communication test

It is recommended to wire the master station and slave station, perform communication settings, and then execute the communication test using the following procedure to confirm proper operation.
Communication test program is not required during operation.

Communication test process

1. After configuring the communication setting of the master station and slave station, and programming, turn the CPU module power supply OFF→ON or reset.
2. Check if the SD and RD LEDs of the used serial port are flashing. If the LEDs are OFF, refer to the troubleshooting (☞ Page 35) below.
3. Set the inputs (X0 to X3) to ON or OFF in the master station, and confirm that the outputs (Y0 to Y3) turn ON or OFF in each slave station.
4. Operate the inputs (X0 to X3) of each slave station to check that the master station output (Y0 to Y3) or the slave station output (Y4 to Y7, Y10 to Y17…Y34 to Y37) turns ON.

Test program for communication (master station)

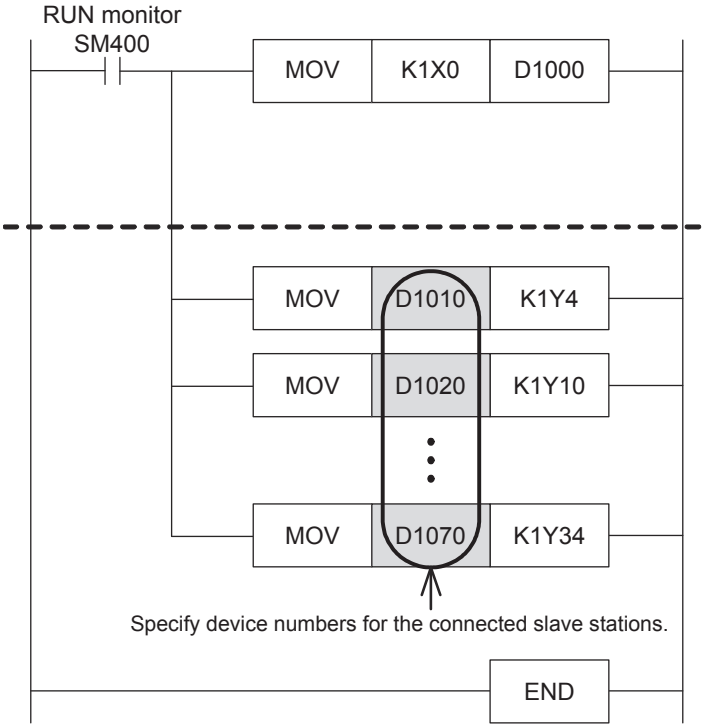

Step for writing information from the master station (master station → slave station)

The contents of X0 to X3 in the master station are transferred to outputs (Y) in each slave station.

Steps for reading information from a slave station (slave station → master station)

By using link devices, read information from all other slave stations.
The table below shows the link devices to be used:

Slave station No.	Link device	Output (Y)
1	D1010	Y4 to Y7
2	D1020	Y10 to Y13
3	D1030	Y14 to Y17
4	D1040	Y20 to Y23
5	D1050	Y24 to Y27
6	D1060	Y30 to Y33
7	D1070	Y34 to Y37

Test program for communication (slave station)

Determine the station number of each slave station, and then transfer a program corresponding to the station number to each slave station.

Assign station numbers from "1" in the ascending order. (Use one station number only once. Do not skip station numbers).

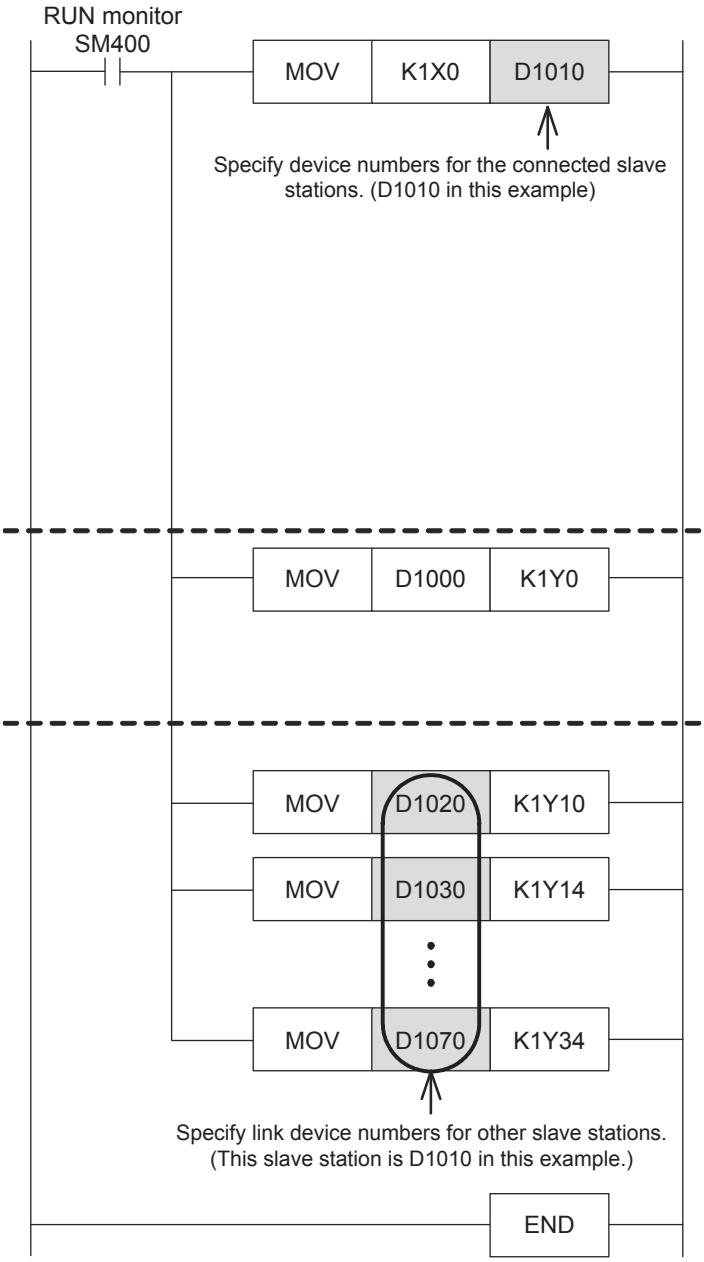

Steps for reading information from a slave station (slave station → master station)

Transfer the contents of X0 to X3 in this slave station to a link device. The link device varies depending on the station number.
The table below shows the link devices to be used:

Slave station No.	Link device
1	D1010
2	D1020
3	D1030
4	D1040
5	D1050
6	D1060
7	D1070

Step for writing information from the master station (master station → slave station)

The contents of X0 to X3 in the master station are transferred to Y0 to Y3 in this slave station.

Steps for reading information from another slave station (another slave stations → this slave station)

By using link devices, read information from another slave stations.
The table below shows the link devices to be used:

Slave station No.	Link device	Output (Y)
1	D1010	Y4 to Y7
2	D1020	Y10 to Y13
3	D1030	Y14 to Y17
4	D1040	Y20 to Y23
5	D1050	Y24 to Y27
6	D1060	Y30 to Y33
7	D1070	Y34 to Y37

Create the master station program

Create programs for the master station.

Arbitrarily create programs for reading and writing link devices.

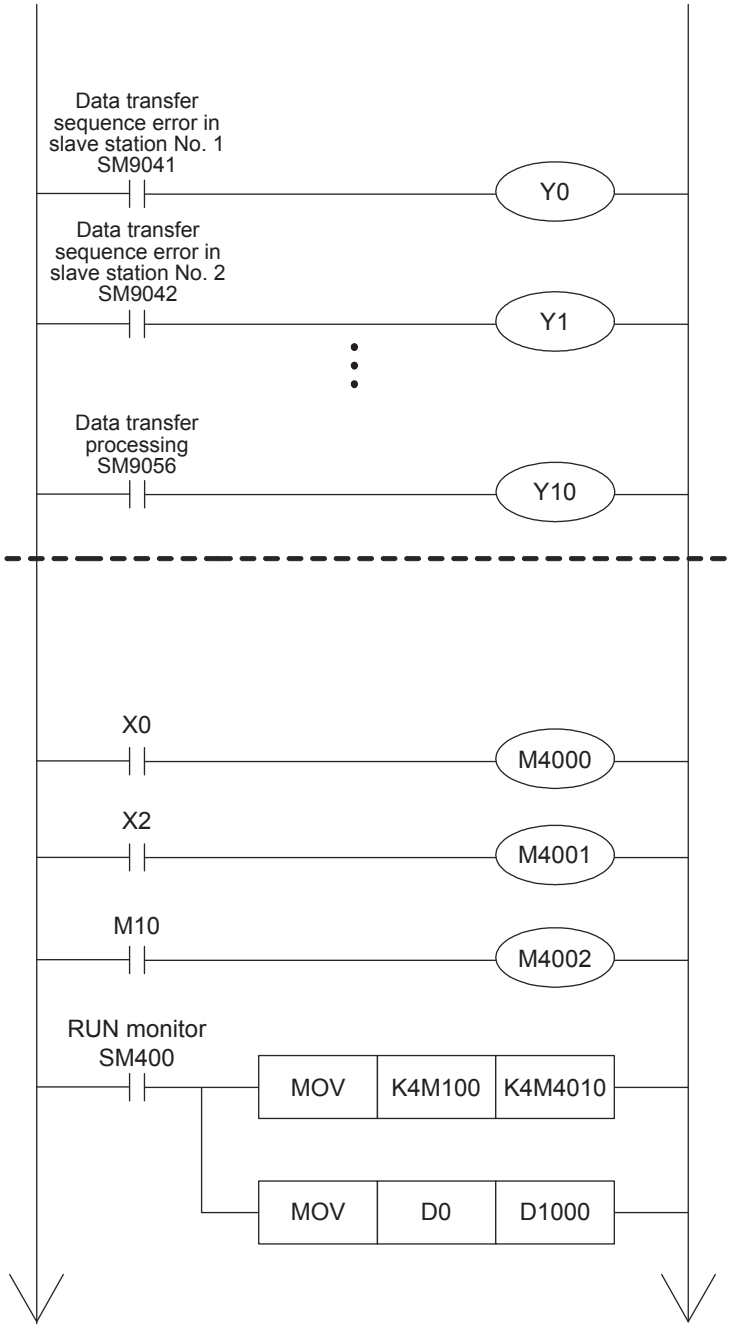

Program for indicating link errors

This program is required to indicate the N:N Network status. Create this step for each connected slave station.

When a link error occurs in the station No. 1, Y0 is set to ON.

When a link error occurs in the station No. 2, Y1 is set to ON.

While the N:N Network is executed, Y10 remains ON.

Program for writing link devices (master station → slave station)

This program is required to write information from the master station to each slave station.

The information from X0 is written to M4000 (link device).

The information from X2 is written to M4001 (link device).

The information from M10 is written to M4002 (link device).

The information from M100 to M115 is written to M4010 to M4025 (link devices).

The information from D0 is written to D1000 (link device).

* In pattern 0, bit devices cannot be used. Use the word devices instead.

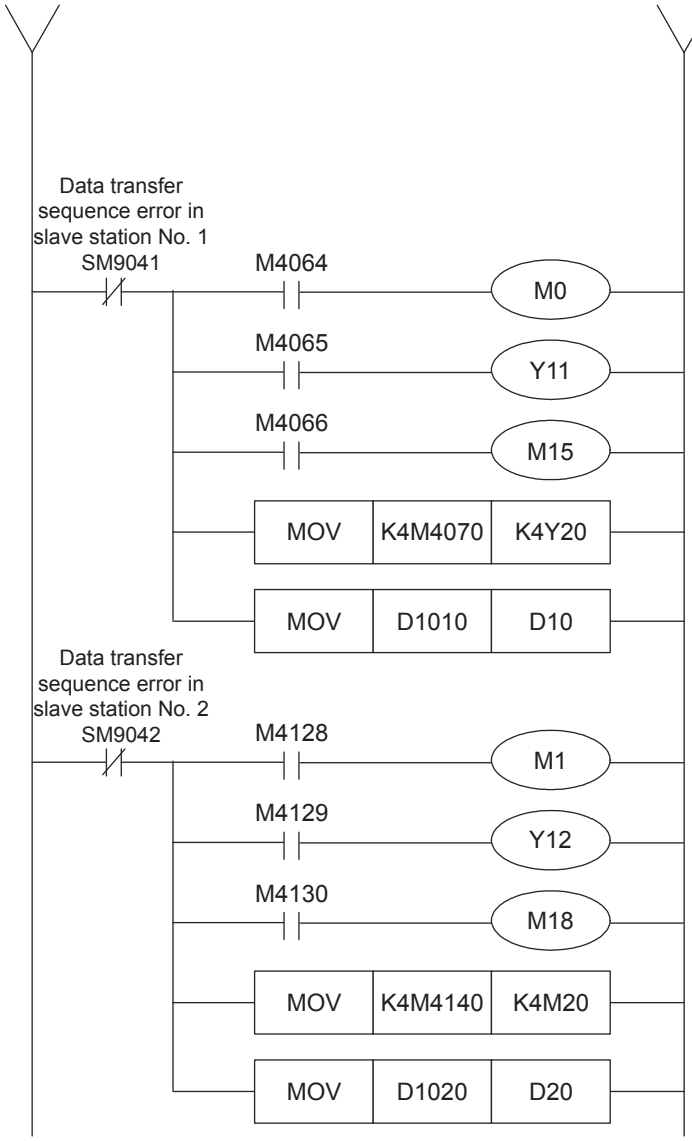

Program for reading link devices (slave station → master station)

This program is required to read information from each slave station to the master station. Monitor link errors in each slave station, and read them.

The information from M4064 (link device) is read to M0.

The information from M4065 (link device) is read to Y11.

The information from M4066 (link device) is read to M15.

The information from M4070 to M4085 (link devices) is read to Y20 to Y37.

The information from D1010 (link device) is read to D10.

The information from M4128 (link device) is read to M1.

The information from M4129 (link device) is read to Y12.

The information from M4130 (link device) is read to M18.

The information from M4140 to M4155 (link devices) is read to M20 to M35.

The information from D1020 (link device) is read to D20.

Refer to the above for creating the error monitoring program of station number 3 or later.

For details on the link devices, refer to ☞ Page 27 Contents of related devices.

For cautions on program creation, refer to ☞ Page 34 Cautions on program creation.

Create programs for the slave stations

Create programs for the slave stations.

Arbitrarily create programs for reading and writing link devices.

The following program is for the slave station of station number 1. Program for station number 2 and later are similar.

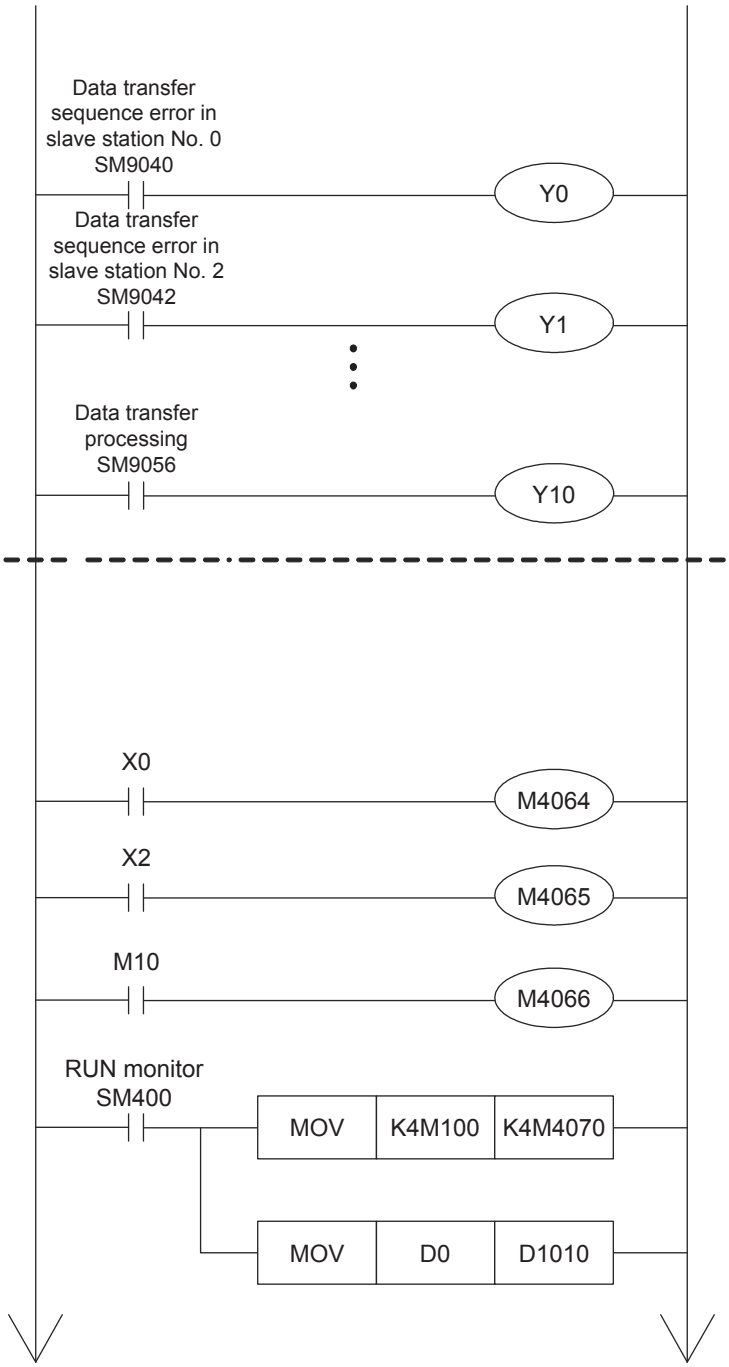

Program for indicating link errors

This program is required to indicate the N:N Network status. Create this step for each connected slave station.

When a link error occurs in the station No. 0, Y0 is set to ON.

When a link error occurs in the station No. 2, Y1 is set to ON.

While the N:N Network is executed, Y10 remains ON.

Program for writing link devices (slave station → master or slave station)

This program is required to write information from a slave station to the master station or another slave station.

The information from X0 is written to M4064 (link device).

The information from X2 is written to M4065 (link device).

The information from M10 is written to M4066 (link device).

The information from M100 to M115 is written to M4070 to M4085 (link devices).

The information from D0 is written to D1010 (link device).

* In pattern 0, bit devices cannot be used. Use the word devices instead.

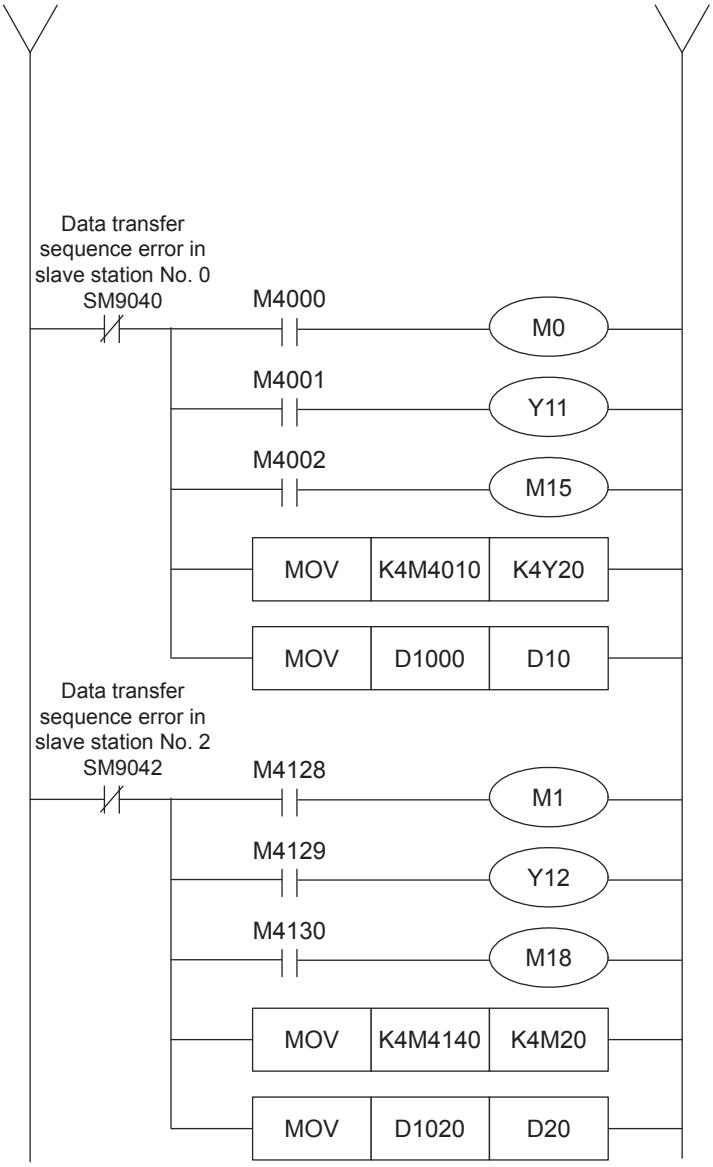

Program for reading link devices (slave station ← master or slave station)

This program is required to read information from the master station or another slave station to a slave station.
Monitor link errors in each slave station, and read them.

The information from M4000 (link device) is read to M0.

The information from M4001 (link device) is read to Y011.

The information from M4002 (link device) is read to M15.

The information from M4010 to M4025 (link devices) is read to Y20 to Y37.

The information from D1000 (link device) is read to D10.

The information from M4128 (link device) is read to M1.

The information from M4129 (link device) is read to Y012.

The information from M4130 (link device) is read to M18.

The information from M4140 to M4155 (link devices) is read to M20 to M35.

The information from D1020 (link device) is read to D20.

For details on the link devices, refer to ☞ Page 27 Contents of related devices.
For cautions on program creation, refer to ☞ Page 34 Cautions on program creation.

Cautions on program creation

- When N:N Network is used, the operation cycle in each PLC becomes longer by about 10% per station.
- Set station numbers consecutively. If a station number that is used twice or more or is skipped, link will not be achieved normally.
- Do not change the contents of link devices at other stations. When a link error (data transfer sequence error) occurs, the link device information is held in the status just before occurrence of the link error. Create program to operate safely when an error occurs.
- Link device update in N:N Network is asynchronous to operations of the sequence program. However, the update processing of the sent data from the slave stations are executed by the END process of each station. Therefore, the change of link device value during the ladder operation is not reflected on the communication data until the END process starts.

• Precaution when changing the station number and number of slave stations

Only when the station number and number of slave stations are set with latch setting can the setting values be written to the corresponding word device from a program or an engineering tool and the setting be changed by powering OFF→ON or a reset. However, be careful not to exceed the range upper limit of device for link device when you set the device head number. When the device range upper limit is exceeded, the operation is as follows.

(1) When the number of slave stations is increased and the master station link device is insufficient

The error code "7705H" is stored in SD8211, SD9061. However, link continues, but it does not update for the device above the range upper limit.

(2) When the number of slave stations is increased and the slave station link device is insufficient

The error code "7705H" is stored in SD of the local station of SD8212 to SD8218 and SD9062 to SD9068. However, link continues, but it does not update for the device above the range upper limit.

(3) When the link device of the local station is out of the device range by changing the slave station number

The error code "7715H" is stored in SD of the local station of SD8212 to SD8218 and SD9062 to SD9068. However, devices above the range upper limit send all 0 (word: 0, bit: OFF). Also, when the error (7705H) of 2) occurs at the same time, 7715H is stored.

2.8 Troubleshooting

This section explains troubleshooting.

For the troubleshooting of FX3 Series, refer to the following manual.

FX Series User's Manual - Data Communication Edition

Checking communication status based on LED indication

Check the status of the LED indications of [RD] and [SD] on the CPU module or the communication board/communication adapter.

LED status		Operation status
RD	SD	
On	On	The data is being sent or received.
On	Off	The data is received, but is not sent.
Off	On	The data is being sent, but is not received.
Off	Off	The data is not being sent or received.

While N:N Network is executed normally, both LEDs flash brightly.

If the LED are not flashing, check the wiring, master station or other slave station setting.

Checking installation and wiring

• Connection status

The communication cannot be operated if the PLC and the communication board/communication adapter are not connected correctly.

For the connection procedure, refer to the following.

📖MELSEC iQ-F FX5U User's Manual (Hardware)

📖MELSEC iQ-F FX5UC User's Manual (Hardware)

• Wiring

Verify that all communication equipment is correctly wired. (☞ Page 21 Wiring)

Checking sequence program

With the channel number that uses N:N Network is specified in the instructions to be used in the inverter communication, non-protocol communication and predefined protocol support function, some error may occurs. (☞ Page 236 Combined Use of Serial Communication)

Checking the communication setting

Verify that protocol type is "N:N Network". When the protocol type is not "N:N Network", communication will not function correctly.(☞ Page 24 Communication Setting)
After changing any communication setting, make sure to turn the PLC power from OFF→ON, or reset.

Checking absence/presence of errors

Verify that link errors have not occurred in the master station and slave stations. The error can be checked using the flags specified below.

Serial communication error

■Error flags

If a communication error occurs in the N:N Network, the serial communication error flag turns ON.
Verify that the device specified in the table below is ON.

FX5 only				FX3 Series compatible		Name	Descriptions
CH1	CH2	CH3	CH4	CH1	CH2		
SM8500	SM8510	SM8520	SM8530	SM8063	SM8438	Serial communication error	Turns ON when an error occurs in serial communication.

■Error codes

When the serial communication error flag turns ON, the error code is stored in the device specified in the table below.

FX5 only				FX3 Series compatible		Name	Descriptions
CH1	CH2	CH3	CH4	CH1	CH2		
SD8500	SD8510	SD8520	SD8530	SD8063	SD8438	Serial communication error code	When a serial communication error occurs, the error code is stored.

The error code (hexadecimal) stored in the devices above are as follows.

FX5 only				FX3 Series compatible		Descriptions
CH1	CH2	CH3	CH4	CH1	CH2	
7700H						N:N Network parameter setting error

For error code above is stored, refer to ☞ Page 37.

Precautions

Serial communication error does not turn OFF even if the communication comes back to normal. The devices turn OFF when power is turned OFF→ON, STOP→RUN, reset or SM50 (Error Detection Reset Completion) is turned ON.

Data transfer sequence error

■Check while data transfer sequence is being executed

Verify that the device specified in the table below is ON.

While N:N Network is being executed, the data transfer sequence ON flag remains ON.

FX5 only	FX3 Series compatible	Name	Descriptions
SM9056	SM8191	Data transfer sequence ON	Remains ON while data transfer is being executed.

■Error flags

When a link error occurs in the master station or slave station of the N:N Network, the data transfer sequence error flag turns ON.

Verify that the device specified in the table below is ON.

Station number	Master station	Slave stations						
	Station No. 0	Station No. 1	Station No. 2	Station No. 3	Station No. 4	Station No. 5	Station No. 6	Station No. 7
FX5 only	SM9040	SM9041	SM9042	SM9043	SM9044	SM9045	SM9046	SM9047
FX3 Series compatible	SM8183	SM8184	SM8185	SM8186	SM8187	SM8188	SM8189	SM8190

■Error codes

When the data transfer sequence error turns ON, the error code is stored in the following device.

Station number	Master station	Slave stations						
	Station No. 0	Station No. 1	Station No. 2	Station No. 3	Station No. 4	Station No. 5	Station No. 6	Station No. 7
FX5 only	SD9061	SD9062	SD9063	SD9064	SD9065	SD9066	SD9067	SD9068
FX3 Series compatible	SD8211	SD8212	SD8213	SD8214	SD8215	SD8216	SD8217	SD8218

For error code above is stored, refer to ☞ Page 37.

Error codes

The error codes (hexadecimal) stored in the devices of error code are as follows. When a error occurs, refer to the error code list shown below to confirm the check points.

Error codes (hexadecimal)	Error name	Station in which error occurred	Station which detected error	Description of error	Check point
2221H*1	Parameter error	M,L	M,L	The parameter read from file is incorrect.	Parameter setting by GX Works3
7701H	Send monitoring timeout in slave station	L	M	Slave station did not respond to the request from the master station within the monitoring time.	• Wiring • Power
7702H	Station number error	L	M	An unexpected slave station responded to the request by the master station.	• Station number settings
7703H	Counter error	L	M	The counter value included in the parameter data is different from the counter value given by a slave station.	• Wiring
7704H	Message format error in slave station	L	M	The message given by the slave station is incorrect.	• Wiring • Power • Station number settings
7705H	Insufficient device points for slave stations error	M,L	M*2,L*2	The link device point number corresponding to the number of slave stations cannot be secured.	• Number of slave stations • Station number settings • Link device head number
7711H	Send monitoring timeout in master station	M	L	The master station did not send request to the next slave station within the monitoring timer.	• Wiring • Power

Error codes (hexadecimal)	Error name	Station in which error occurred	Station which detected error	Description of error	Check point
7714H	Message format error in master station	M	L	The message from the master station is incorrect.	• Wiring • Power • Station number settings
7715H	Insufficient link device points for local station error	L	L*2	The link device corresponding to the local station number cannot be secured (If the error occurs at the same as 05H, 15H is stored).	• Number of slave stations • Station number settings • Link device head number
7721H	Slave station no response error	L	L*3	The specified slave station does not exist.	• Wiring • Power • Station number settings
7722H	Station number error in slave station	L	L*3	An unexpected slave station responded to the request by the master station.	• Station number settings
7723H	Counter error in slave station	L	L*3	The counter value included in the parameter data is different from the count value given by a slave station.	• Wiring
7731H	Parameter not received	L	L*3	Before parameters had been received, sending request was received from the master station.	• Wiring • Power

M: Master station, L: Slave station
*1 Not supported for data transfer sequence error.
*2 Station in which error occurred
*3 Any slave station other than the slave station in which error occurred

2.9 Related Devices

List of related devices

Special relay

■FX5 only

Device No.	Name	Descriptions	Detection	R/W	Available station	
					Master station (Station No. 0)	Slave stations
SM8500	Serial communication error (CH1)	Turns ON when serial communication error of CH1 occurs.	M,L	R	○	○ (Station 1 to 7)
SM8510	Serial communication error (CH2)	Turns ON when serial communication error of CH2 occurs.	M,L	R	○	○ (Station 1 to 7)
SM8520	Serial communication error (CH3)	Turns ON when serial communication error of CH3 occurs.	M,L	R	○	○ (Station 1 to 7)
SM8530	Serial communication error (CH4)	Turns ON when serial communication error of CH4 occurs.	M,L	R	○	○ (Station 1 to 7)
SM9040	Data communication error (Master station)	Turns ON when data transfer sequence error of master station occurs.	L	R	×	○ (Station 1 to 7)

Device No.	Name	Descriptions	Detection	R/W	Available station	
					Master station (Station No. 0)	Slave stations
SM9041	Data transfer sequence error (Slave station 1)	Turns ON when data transfer sequence error of slave station occurs However, data sequence errors that occurred in the local station (slave station) cannot be detected.	M,L	R	○	○ (Except station 1)
SM9042	Data transfer sequence error (Slave station 2)					○ (Except station 2)
SM9043	Data transfer sequence error (Slave station 3)					○ (Except station 3)
SM9044	Data transfer sequence error (Slave station 4)					○ (Except station 4)
SM9045	Data transfer sequence error (Slave station 5)					○ (Except station 5)
SM9046	Data transfer sequence error (Slave station 6)					○ (Except station 6)
SM9047	Data transfer sequence error (Slave station 7)					○ (Except station 7)
SM9056	Data transfer sequence ON	Remains ON while data transfer is being executed.	M,L	R	○	○ (Station 1 to 7)
SM9080	Station number settings SD latch setting valid information	Turns ON when SD latch setting is set for the station number.	M,L	R	○	○ (Station 1 to 7)
SM9081	Slave station quantity setting SD latch setting valid information	Turns ON when SD latch setting is set for the number of slave stations setting.	M,L	R	○	×

R: Read only, R/W: Read/Write, M: master station (station number 0), L: slave station (station number 1 to 7)

■FX3 Series compatible

Device No.	Name	Descriptions	Detection	R/W	Available station	
					Master station (Station No. 0)	Slave stations
SM8063	Serial communication error (CH1)	Turns ON when error occurs in the serial communication with the SM/SD compatible with FX3 Series being CH1.	M,L	R	○	○ (Station 1 to 7)
SM8438	Serial communication error (CH2)	Turns ON when error occurred in serial communication with the SM/SD compatible with FX3 Series being CH2.	M,L	R	○	○ (Station 1 to 7)
SM8183	Data communication error (Master station)	Turns ON when data transfer sequence error occurs in the master station.	L	R	×	○ (Station 1 to 7)
SM8184	Data transfer sequence error (Slave station 1)	Turns ON when a data transfer sequence error occurs in each slave station. However, data sequence errors that occurred in the local station (slave station) cannot be detected.	M,L	R	○	○ (Except station 1)
SM8185	Data transfer sequence error (Slave station 2)					○ (Except station 2)
SM8186	Data transfer sequence error (Slave station 3)					○ (Except station 3)
SM8187	Data transfer sequence error (Slave station 4)					○ (Except station 4)
SM8188	Data transfer sequence error (Slave station 5)					○ (Except station 5)
SM8189	Data transfer sequence error (Slave station 6)					○ (Except station 6)
SM8190	Data transfer sequence error (Slave station 7)					○ (Except station 7)
SM8191	Data transfer sequence ON	Remains ON while data transfer is being executed.	M,L	R	○	○ (Station 1 to 7)

R: Read only, M: Master station (station number 0), L: Slave station (station number 1 to 7)

Special Register

■FX5 only

Device No.	Name	Descriptions	Detection	R/W	Available station	
					Master station (Station No. 0)	Slave stations
SD9040	Station number settings status	Provided to check the station number.	M,L	R	○	○ (Station 1 to 7)
SD9041	Number of slave stations setting status	Provided to check the number of slave stations.	M,L	R	○	○ (Station 1 to 7)
SD8500	Serial communication error code (CH1)	When an error occurs in the serial communication of CH1, the error code is stored.	M,L	R	○	○ (Station 1 to 7)
SD8502	Serial communication settings (CH1)	Stores the set communication parameter in the PLC of CH1.	M,L	R	○	○ (Station 1 to 7)
SD8503	Serial communication operation mode (CH1)	Stores the communication function that serial communication of CH1 being used.	M,L	R	○	○ (Station 1 to 7)
SD8510	Serial communication error code (CH2)	Stores the error code when an error occurs in the serial communication of CH2.	M,L	R	○	○ (Station 1 to 7)
SD8512	Serial communication settings (CH2)	Stores the set communication parameter in the PLC of CH2.	M,L	R	○	○ (Station 1 to 7)
SD8513	Serial communication operation mode (CH2)	Stores the communication function that serial communication of CH2 being used.	M,L	R	○	○ (Station 1 to 7)
SD8520	Serial communication error code (CH3)	Stores the error code when an error occurs in the serial communication of CH3.	M,L	R	○	○ (Station 1 to 7)
SD8522	Serial communication settings (CH3)	Stores the set communication parameter in the PLC of CH3.	M,L	R	○	○ (Station 1 to 7)
SD8523	Serial communication operation mode (CH3)	Stores the communication function that serial communication of CH3 being used.	M,L	R	○	○ (Station 1 to 7)
SD8530	Serial communication error code (CH4)	Stores the error code when an error occurs in the serial communication of CH4.	M,L	R	○	○ (Station 1 to 7)
SD8532	Serial communication settings (CH4)	Stores the set communication parameter in the PLC of CH4.	M,L	R	○	○ (Station 1 to 7)
SD8533	Serial communication operation mode (CH4)	Stores the communication function that serial communication of CH4 being used.	M,L	R	○	○ (Station 1 to 7)
SD9043	Present link scan time	Current value of the network cycle time	M,L	R	○	○ (Station 1 to 7)
SD9044	Maximum link scan time	Maximum value of the network cycle time	M,L	R	○	○ (Station 1 to 7)
SD9045	Number of communication error at master station	Number of data transfer sequence errors occurred in the master station.	L	R	×	○ (Station 1 to 7)
SD9046	Number of communication error at slave station 1	Number of data transfer sequence errors occurred in other slave station. However, data sequence errors that occurred in the local station (slave station) cannot be detected.	M,L	R	○	○ (Except station 1)
SD9047	Number of communication error at slave station 2					○ (Except station 2)
SD9048	Number of communication error at slave station 3					○ (Except station 3)
SD9049	Number of communication error at slave station 4					○ (Except station 4)
SD9050	Number of communication error at slave station 5					○ (Except station 5)
SD9051	Number of communication error at slave station 6					○ (Except station 6)
SD9052	Number of communication error at slave station 7					○ (Except station 7)
SD9061	Data transmission error code (Master station)	Stores the error code for the master station.	L	R	×	○ (Station 1 to 7)

Device No.	Name	Descriptions	Detection	R/W	Available station	
					Master station (Station No. 0)	Slave stations
SD9062	Data transmission error code (slave station 1)	Number of data transfer sequence errors occurred in other slave station. However, data sequence errors that occurred in the local station (slave station) cannot be detected.	M,L	R	○	○ (Except station 1)
SD9063	Data transmission error code (slave station 2)					○ (Except station 2)
SD9064	Data transmission error code (slave station 3)					○ (Except station 3)
SD9065	Data transmission error code (slave station 4)					○ (Except station 4)
SD9066	Data transmission error code (slave station 5)					○ (Except station 5)
SD9067	Data transmission error code (slave station 6)					○ (Except station 6)
SD9068	Data transmission error code (slave station 7)					○ (Except station 7)
SD9080*1	Station number settings	Set the local station number.	M,L	*2	○	○ (Station 1 to 7)
SD9081*1	Number of slave stations setting	Set the number of connected slave stations.	M,L	*2	○	○ (Station 1 to 7)
SD9082	Refresh range setting status	Refresh range check (same description as SD8175)	M,L	R	○	○ (Station 1 to 7)
SD9083	Number of retries setting status	Check of the number of communication retry times that occur (same description as SD8179)	M,L	R	○	○ (Station 1 to 7)
SD9084	Monitoring time setting status	Monitoring time check However, the slave station stores the doubled value of the setting value of the master station.	M,L	R	○	○ (Station 1 to 7)

R: Read only, M: Master station (station number 0), L: Slave station (station number 1 to 7)

*1 When latch setting is set to "latch", change the device value with a program or an engineering tool and powering OFF→ON or reset to operate the corresponding functions with the changed value.

*2 With latch settings: Read/write
No latch settings: Read only

■FX3 Series compatible

Device No.	Name	Descriptions	Detection	R/W	Available station	
					Master station (Station No. 0)	Slave stations
SD8173	Station number settings status	Provided to check the station number.	M,L	R	○	○ (Station 1 to 7)
SD8174	Number of slave stations setting status	Provided to check the number of slave stations.	M,L	R	○	○ (Station 1 to 7)
SD8175	Refresh range setting status	Provided to check the refresh range.	M,L	R	○	○ (Station 1 to 7)
SD8063	Serial communication error code (CH1)	Stores the error code when error occurs in the serial communication with the SM/SD compatible with FX3 Series being CH1.	M,L	R	○	○ (Station 1 to 7)
SD8405	Serial communication settings (CH1)	Stores the set communication parameter with the SM/SD compatible with FX3 Series being CH1.	M,L	R	○	○ (Station 1 to 7)
SD8419	Serial communication operation mode (CH1)	Stores the communication function of the serial communication operation with the SM/SD compatible with FX3 Series CH1.	M,L	R	○	○ (Station 1 to 7)
SD8438	Serial communication error code (CH2)	Stores the error code when error occurs in the serial communication with the SM/SD compatible with FX3 Series being CH2.	M,L	R	○	○ (Station 1 to 7)
SD8425	Serial communication settings (CH2)	Stores the set communication parameter with the SM/SD compatible with FX3 Series being CH2.	M,L	R	○	○ (Station 1 to 7)

Device No.	Name	Descriptions	Detection	R/W	Available station	
					Master station (Station No. 0)	Slave stations
SD8439	Serial communication operation mode (CH2)	Store the communication function of the serial communication operation with the SM/SD compatible with FX3 Series in CH2.	M,L	R	○	○ (Station 1 to 7)
SD8201	Present link scan time	Current value of the network cycle time	M,L	R	○	○ (Station 1 to 7)
SD8202	Maximum link scan time	Maximum value of the network cycle time	M,L	R	○	○ (Station 1 to 7)
SD8203	Number of communication error at master station	Number of data transfer sequence errors occurred in the master station.	L	R	×	○ (Station 1 to 7)
SD8204	Number of communication error at slave station 1	Number of data transfer sequence errors occurred in other slave station. However, data sequence errors that occurred in the local station (slave station) cannot be detected.	M,L	R	○	○ (Except station 1)
SD8205	Number of communication error at slave station 2					○ (Except station 2)
SD8206	Number of communication error at slave station 3					○ (Except station 3)
SD8207	Number of communication error at slave station 4					○ (Except station 4)
SD8208	Number of communication error at slave station 5					○ (Except station 5)
SD8209	Number of communication error at slave station 6					○ (Except station 6)
SD8210	Number of communication error at slave station 7					○ (Except station 7)
SD8211	Code of communication error at master station	Stores the error code for the master station.	L	R	×	○ (Station 1 to 7)
SD8212	Data transmission error code (slave station 1)	Stores the data transfer error code occurred in other slave station. However, data sequence errors that occurred in the local station (slave station) cannot be detected.	M,L	R	○	○ (Except station 1)
SD8213	Data transmission error code (slave station 2)					○ (Except station 2)
SD8214	Data transmission error code (slave station 3)					○ (Except station 3)
SD8215	Data transmission error code (slave station 4)					○ (Except station 4)
SD8216	Data transmission error code (slave station 5)					○ (Except station 5)
SD8217	Data transmission error code (slave station 6)					○ (Except station 6)
SD8218	Data transmission error code (slave station 7)					○ (Except station 7)

R: Read only, M: Master station (station number 0), L: Slave station (station number 1 to 7)

Details of related devices

The devices described below are used in N:N Network.

The "FX3 Series-compatible" device operates only the channel which is specified in the SM/SD settings of communication setting. (☞ Page 24)

Serial communication error

Turns ON when an error occurs in serial communication. These flags are for check of the serial communication error.

FX5 only				FX3 Series compatible		Descriptions	R/W
CH1	CH2	CH3	CH4	CH1	CH2		
SM8500	SM8510	SM8520	SM8530	SM8063	SM8438	Turns ON when an error occurs in serial communication.	R

R: Read only

After the devices above turns ON, the error code is stored in the compatible devices below.

FX5 only				FX3 Series compatible		Name	Descriptions
CH1	CH2	CH3	CH4	CH1	CH2		
SD8500	SD8510	SD8520	SD8530	SD8063	SD8438	Serial communication error code	When a serial communication error occurs, the error code is stored.

Precautions

Do not turn ON or OFF with program or engineering tool.

Serial communication error does not turn OFF even if the communication comes back to normal. The devices turn OFF when power is turned OFF→ON, STOP→RUN, reset or SM50 (Error Detection Reset Completion) is turned ON.

Data transfer sequence error

Turns ON when a data transfer sequence error occurs in the master station or slave station.

Station number	Master station	Slave stations							R/W
	Station No. 0	Station No. 1	Station No. 2	Station No. 3	Station No. 4	Station No. 5	Station No. 6	Station No. 7	
FX5 only	SM9040	SM9041	SM9042	SM9043	SM9044	SM9045	SM9046	SM9047	R
FX3 Series compatible	SM8183	SM8184	SM8185	SM8186	SM8187	SM8188	SM8189	SM8190	

R: Read only

After the devices above turn ON, the error code is stored in the corresponding devices below (data transfer sequence error).

Station number	Master station	Slave stations						
	Station No. 0	Station No. 1	Station No. 2	Station No. 3	Station No. 4	Station No. 5	Station No. 6	Station No. 7
FX5 only	SD9061	SD9062	SD9063	SD9064	SD9065	SD9066	SD9067	SD9068
FX3 Series compatible	SD8211	SD8212	SD8213	SD8214	SD8215	SD8216	SD8217	SD8218

Precautions

Data transfer sequence errors in a station itself cannot be detected.

Do not turn ON with program or engineering tool.

Data transfer sequence error does not turn OFF even if the communication comes back to normal. The devices turn OFF when power is turned OFF→ON, STOP→RUN, reset or SM50 (Error Detection Reset Completion) is turned ON.

Data transfer sequence ON

Turns ON the data send operation with the master station and also the other slave stations.

FX5 only	FX3 Series compatible	Descriptions	R/W
SM9056	SM8191	ON: Data transfer sequence processing OFF: Data transfer sequence is stopped	R

R: Read only

Precautions

Do not turn ON with program or engineering tool.

Serial communication error code

Stores the error code for the serial communication (☞ Page 37).

FX5 only				FX3 Series compatible		Descriptions	R/W
CH1	CH2	CH3	CH4	CH1	CH2		
SD8500	SD8510	SD8520	SD8530	SD8063	SD8438	Stores the error code when the serial communication error occurs.	R

R: Read only

Precautions

Do not change the value with program or engineering tool.

Serial communication errors are not cleared even after communication has recovered its normal status.

Cleared the devices when power is turned OFF→ON, STOP→RUN, reset or SM50 (Error Detection Reset Completion) is turned ON.

Serial communication settings

Stores the set communication parameter in the communication settings.

FX5 only				FX3 Series compatible		Descriptions	R/W
CH1	CH2	CH3	CH4	CH1	CH2		
SD8502	SD8512	SD8522	SD8532	SD8405	SD8425	Stores the setting of the communication parameter.	R

R: Read only

The description of the communication parameter is as follows.

Bit No.	Name	Descriptions	
		0 (bit = OFF)	1 (bit = ON)
b0	Data length	7 bits	—
b1 b2	Parity bit	b2,b1 (1, 1): Even	
b3	Stop bit	1 bit	—
b4 b5 b6 b7	Baud rate	b7, b6, b5, b4 (1,0,1,0): 38400 bps	
b12	H/W type	RS-485	

Precautions

Do not change the value with program or engineering tool.

Station number settings status

Stores the set station number in the communication settings (☞ Page 24). This device is for checking the setting status of station number of the local station.

FX5 only	FX3 Series compatible	Descriptions	R/W
SD9040	SD8173	0: Master station 1 to 7: Slave station	R

R: Read only

- Master station

Reflects the parameter setting value on each device.

- Slave stations

Reflects the master station setting value on each device.

Precautions

Do not change the value with program or engineering tool.

Station number settings SD latch setting valid information

Turns ON when SD latch setting is set for the station number settings in the communication settings (☞ Page 24).

FX5 only	Descriptions	R/W
SM9080	ON: Station number settings is latched OFF: Station number settings is not latched	R

R: Read only

Precautions

Do not change the value with program or engineering tool.

Station number settings

Stores the set station number in the communication settings (☞ Page 24). The stored value is the same as station number settings status (SD9040, SD8173). When the latch setting is set, the station number can be changed with the program.

FX5 only	Descriptions	R/W
SD9080	0: Master station 1 to 7: Slave station	R*1

R: Read only

*1 When the latch setting is set, read/write is possible.

- Master station

The parameter setting value is reflected also to the station number settings status (SD9040, SD8173).

- Slave stations

The parameter setting value is reflected also to the station number settings status (SD9040, SD8173).

When the latch setting is set to SD9080, value can be changed with a program or an engineering tool. The values can be changed by powering OFF→ON or reset.

Precautions

When the latch setting is not set, do not change the value with program or engineering tool.

Number of slave stations setting status

Stores the set number of slave stations in the communication settings. Use this device to check the number of slave stations set in the master station.

FX5 only	FX3 Series compatible	Descriptions	R/W
SD9041	SD8174	1 to 7	R

R: Read only

- Master station

Reflects the parameter setting value on each device.

- Slave stations

Reflects the master station setting value on each device.

Precautions

Do not change the value with program or engineering tool.

Number of slave stations setting SD latch setting valid information

Turns ON when SD latch setting is set for the total number of local station settings in the communication settings (☞ Page 24).

FX5 only	Descriptions	R/W
SM9081	ON: Number of slave stations settings is latched OFF: Number of slave stations settings is not latched	R

R: Read only

Precautions

Do not change the value with program or engineering tool.

Number of slave stations setting

Stores the set number of slave stations in the serial communication settings (☞ Page 24). The stored value is the same as number of slave stations setting status (SD9041, SD8174). When there is latch setting, it is possible to change the number of slave stations from the program.

FX5 only	Descriptions	R/W
SD9081	1 to 7	R*1

R: Read only

*1 With latch settings: Read/write
No latch settings: Read only

- Master station

The parameter setting value is reflected also to the number of slave stations setting status. (SD9041, SD8174).
When SD9081 latch setting is set, it is possible to change the setting value by a program or engineering tool and shutdown OFF→ON or reset.

- Slave stations

After the communication is started, reflects the master station setting value on each device.

Precautions

When the latch setting is not set, do not change the value with program or engineering tool.

Refresh range setting status

Stores the set refresh range in the communication settings (☞ Page 24). Use this device to check the refresh range set in the master station.

FX5 only	FX3 Series compatible	Descriptions	R/W
SD9082	SD8175	0: pattern 0 1: pattern 1 2: pattern 2	R

R: Read only

- Master station

Reflects the parameter setting value on each device.

- Slave stations

After the communication is started, reflects the master station setting value on each device.

Precautions

Do not change the value with program or engineering tool.

Number of retries times setting

Stores the set number of retries in the communication settings (☞ Page 24). Stores the setting value of the number of retries.

FX5 only	Descriptions	R/W
SD9083	0 to 10 (time)	R

R: Read only

- Master station

Reflects the parameter setting value on each device.

- Slave stations

After the communication is started, reflects the master station setting value on each device.

Precautions

Do not change the value with program or engineering tool.

Monitoring time setting

Stores the set monitoring time in the communication settings (☞ Page 24).

FX5 only	FX3 Series compatible	Descriptions	R/W
SD9084	SD8180	50 to 2550 (ms)	R

R: Read only

- Master station

Reflects the parameter setting value on each device.

- Slave stations

After the communication is started, reflects the master station setting value on each device.

Precautions

Do not change the value with program or engineering tool.

Present link scan time

This device stores the current value of the network cycle in the N:N Network.

FX5 only	FX3 Series compatible	Descriptions	R/W
SD9043	SD8201	0 to 32767 (×10 ms)	R

R: Read only

Precautions

Do not change the value with program or engineering tool.

Maximum link scan time

This device stores the maximum value of the network cycle in the N:N Network.

FX5 only	FX3 Series compatible	Descriptions	R/W
SD9044	SD8202	0 to 32767 (×10 ms)	R

R: Read only

Precautions

Do not change the value with program or engineering tool.

Data transfer sequence error count

These devices store the number of data transfer sequence errors that occurred in the master station and slave stations.

Station number	Master station	Slave stations							R/W
	Station No. 0	Station No. 1	Station No. 2	Station No. 3	Station No. 4	Station No. 5	Station No. 6	Station No. 7	
FX5 only	SD9045	SD9046	SD9047	SD9048	SD9049	SD9050	SD9051	SD9052	R
FX3 Series compatible	SD8203	SD8204	SD8205	SD8206	SD8207	SD8208	SD8209	SD8210	

R: Read only

Precautions

Data transfer sequence errors in a station itself cannot be detected.

Do not change the value with program or engineering tool.

Data transfer sequence error count does not turn OFF even if the communication comes back to normal. The devices turn OFF when power is turned OFF→ON, STOP→RUN, reset or SM50 (Error Detection Reset Completion) is turned ON.

Data transmission error code

These devices store the error code (☞ Page 37) of the master station or the slave stations.

Station number	Master station	Slave stations							R/W
	Station No. 0	Station No. 1	Station No. 2	Station No. 3	Station No. 4	Station No. 5	Station No. 6	Station No. 7	
FX5 only	SD9061	SD9062	SD9063	SD9064	SD9065	SD9066	SD9067	SD9068	R
FX3 Series compatible	SD8211	SD8212	SD8213	SD8214	SD8215	SD8216	SD8217	SD8218	

R: Read only

Precautions

Data transfer sequence errors in a station itself cannot be detected.

Do not change the value with program or engineering tool.

Data transmission error code does not turn OFF even if the communication comes back to normal. The devices turn OFF when power is turned OFF→ON, STOP→RUN, reset or SM50 (Error Detection Reset Completion) is turned ON.

Serial communication operation mode

Stores the communication function code that serial communication is being used.

FX5 only				FX3 Series compatible		Descriptions	R/W
CH1	CH2	CH3	CH4	CH1	CH2		
SD8503	SD8513	SD8523	SD8533	SD8419	SD8439	0: MELSOFT Connection or MC protocol 3: N:N Network Communication 5: Non-protocol Communication 6: Parallel Link Communication 7: Inverter Communication 9: MODBUS RTU Communication 12: Predefined protocol support Other than above: Not used	R

R: Read only

Precautions

Do not change the value with program or engineering tool.

3 PARALLEL LINK FUNCTION

This chapter explains parallel link.

3.1 Function Outline

The parallel link function is designed to connect two FX5 PLCs and mutually link the devices.

- The link mode can be selected from two modes, normal parallel link and high-speed parallel link modes, depending on the number of devices to be linked and link time.
- Data link is automatically updated between two FX5 PLCs.
- The total extension distance is 1200 m maximum. (only when the FX5-485ADP is used in the configuration)
- The head device number can be set for each of the internal relay (M) and data register (D) for link.

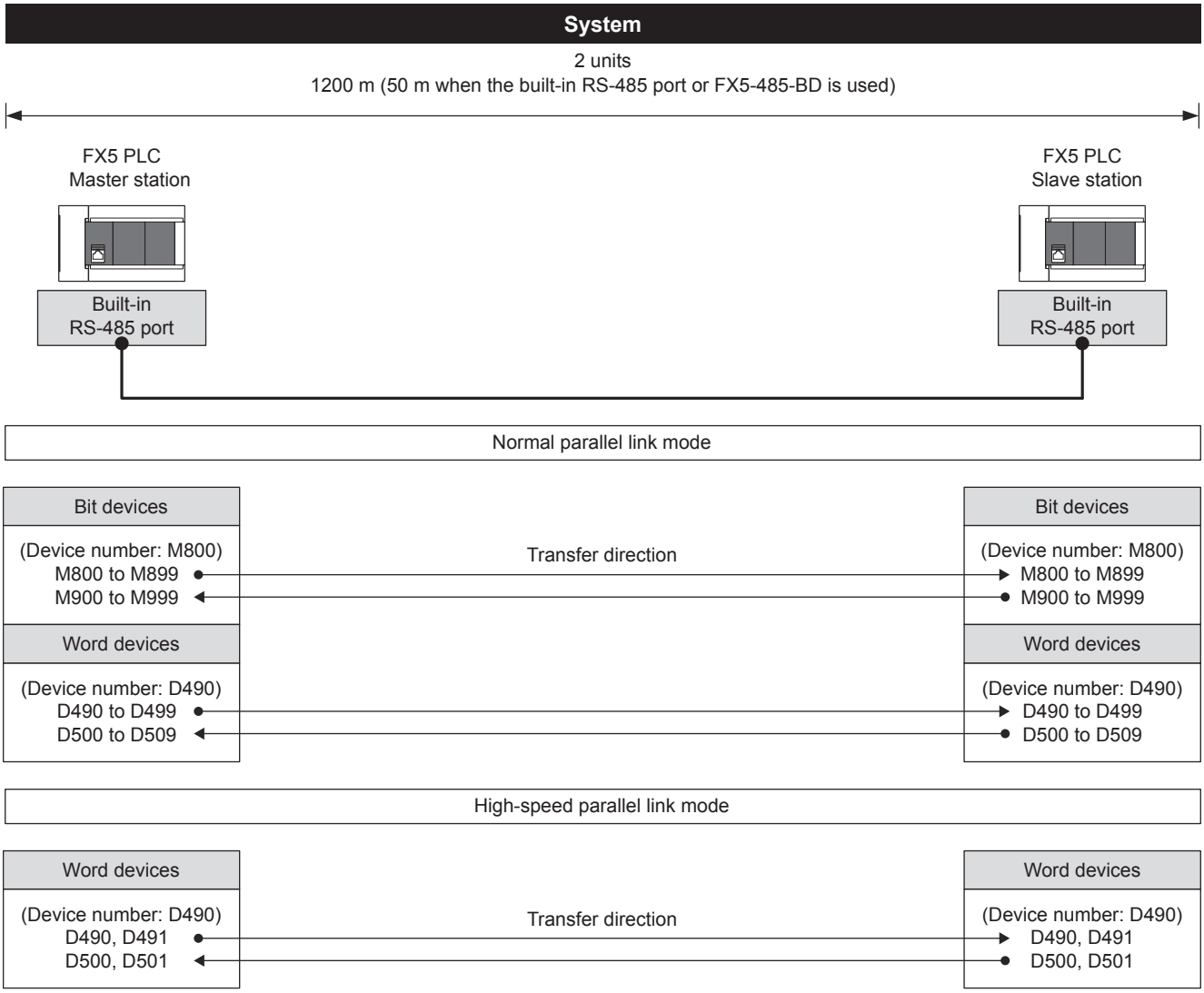

The device numbers for link are defaults.

3.2 Procedure before Operation

The flow chart below shows the procedures from parallel link function setting to data link:

1. Check communication specifications

For the communication specifications, link specifications, link time, link device numbers and number of link points, refer to ☞ Page 52 Specifications.

2. System configuration and selection

For the system configuration and selection of communication devices, refer to ☞ Page 51 System Configuration.

3. Wiring

For the wiring with twisted pair cables and wiring examples, refer to ☞ Page 54 Wiring.

4. Communication setting*1

For the communication settings of communication devices, refer to ☞ Page 57 Communication Setting.

5. Program creation

For the communication test program, master station program and slave station program, refer to ☞ Page 59 Programming.

*1 For details on operating procedures of GX Works3, refer to the manual below.
📖GX Works3 Operating Manual

3.3 System Configuration

This section outlines the system configuration required to use the parallel link function.

You can use the parallel link function in the CPU module using the built-in RS-485 port, communication board, and communication adapter.

The serial port assignments are fixed to the following numbers, regardless of the system configuration.

■FX5U CPU module

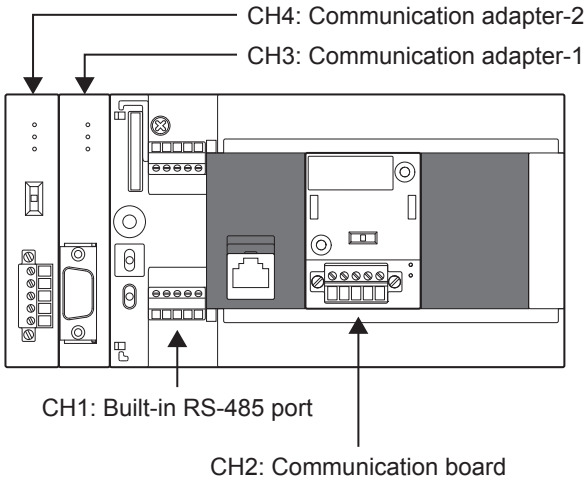

■FX5UC CPU module

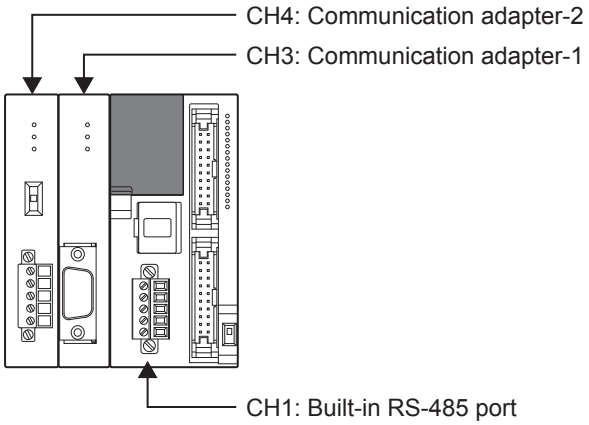

Communication device

		Serial port	Important points for selection	Overall distance
Built-in RS-485 port		CH1	Since it is built-into the CPU module, there is no need to add equipment.	50 m or less
Communication board	FX5-485-BD	CH2	Mounted on top of the CPU module, there is no change in the installation space requirements.	50 m or less
Communication adapter	FX5-485ADP	CH3, CH4*1	Mount the communication adapter to the left of the CPU module.	1200 m or less

*1 Assign CH3 and CH4 in the order from the adapter closest to CPU module.

Restriction

In the parallel link, only one channel is available to use for one CPU module.

3.4 Specifications

This section describes the communication specifications and performance of the parallel link function.

Communication specifications

The parallel link function is executed according to the communication specifications (fixed) shown in the table below.
Specification items such as baud rate cannot be changed.

Item		Specifications	Remarks
Number of connectable units		Maximum of 2 (1: 1)	—
Transmission standard		RS-485 standard	—
Maximum overall distance		When only FX5-485ADP is used in the configuration: 1200 m or less Other than the above configuration: 50 m or less	—
Protocol Type		Parallel link	—
Control procedure		—	—
Communication method		Half-duplex, bi-directional communication	—
Baud rate		115200 bps	—
Character format	Start bit	1 bit	—
	Data length	7 bit	—
	Parity bit	Even	—
	Stop bit	1 bit	—
Header		Fixed	—
Terminator		Fixed	—
Control line		—	—
Sum check		Fixed	—

Link specifications

Link time

The link time is the cycle time for updating of link device.
The link time varies depending on the link mode as shown in the table below.

Link mode	Time
Normal parallel link mode	15 ms + operation cycle of master station (ms) + operation cycle of slave station (ms)
High-speed parallel link mode	5 ms + operation cycle of master station (ms) + operation cycle of slave station (ms)

Link device number and number of link points

The devices to be occupied are assigned according to the head number of the link device set by GX Works3. Also the link mode is specified by GX Works3. (☞ Page 57 Communication Setting)

Mode		Normal parallel link mode		High-speed parallel link mode	
		Internal relay (M)	Data register (D)	Internal relay (M)	Data register (D)
Station number		100 in each station	10 in each station	0 points	2 in each station
Master station	For sending	M (y1) to M (y1 + 99)	D (x1) to D (x1 + 9)	—	D (x1), D (x1 +1)
	For receiving	M (y1 + 100) to M (y1 + 199)	D (x1 + 10) to D (x1 + 19)	—	D (x1 + 10), D (x1 +11)
Slave station	For receiving	M (y2) to M (y2 + 99)	D (x2) to D (x2 + 9)	—	D (x2), D (x2 +1)
	For sending	M (y2 + 100) to M (y1 + 199)	D (x2 + 10) to D (x2 + 19)	—	D (x2 + 10), D (x2 +11)

x1: [Master station] Link device head number of data register (D)
x2: [Slave station] Link device head number of data register (D)
y1: [Master station] Link device head number of internal relay (M)
y2: [Slave station] Link device head number of internal relay (M)

■Normal parallel link mode

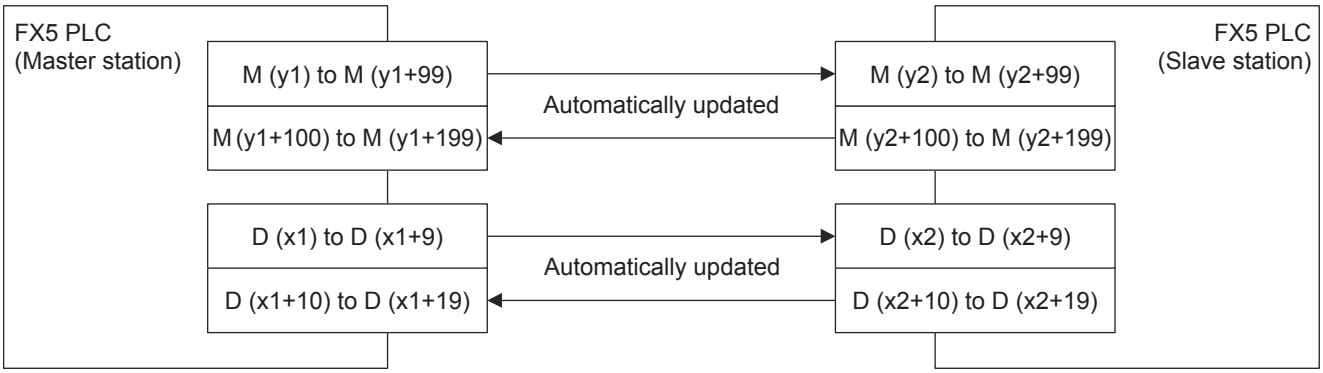

■High-speed parallel link mode

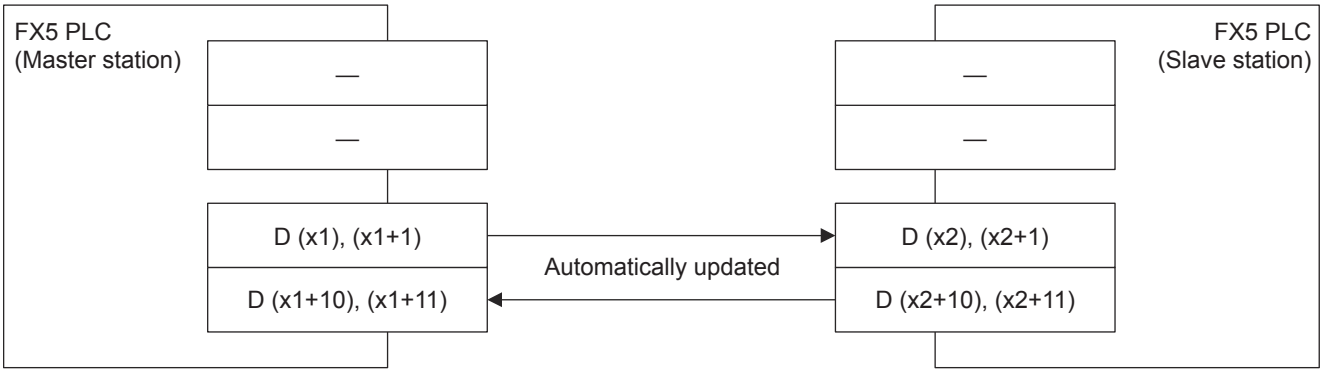

Precautions

When creating a program, do not change the information in devices used by other stations. If such information is changed, the other stations will not operate normally.

3.5 Wiring

This section explains about the wiring.

Wiring procedure

1. Preparing for wiring

Prepare cables required for wiring. (☞ Page 54 Cable)

2. Turn OFF the PLC power

Before wiring, make sure that the PLC power is OFF.

3. Wire the communication equipment

Connect the RS-485 communication equipment. (☞ Page 56 Connection diagram)

Cable

Select cables using the procedure described below.

Twisted pair cable

Use shielded twisted pair cables for connecting RS-485 communication equipment.

The specifications of the cables used in wiring are shown.

■RS-485 cable specifications

Items	Descriptions
Cable type	Shielded cable
Number of pairs	2p, 3p
Conductor resistance (20℃)	88.0 Ω/km or less
Insulation resistance	10000 MΩ-km or more
Voltage resistance	500 V DC, 1 minute
Electrostatic capacitance (1 kHz)	60 nF/km or less as an average
Characteristic impedance (100 kHz)	110±10Ω

■Cable structural drawing (reference)

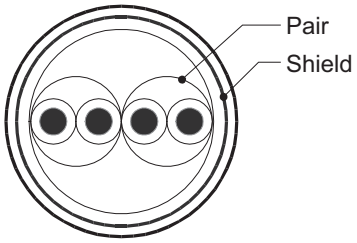

Example of two-pair cable structural drawing

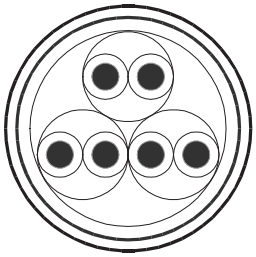

Example of three-pair cable structural drawing

Connecting cables

The table below shows applicable cables and tightening torques.

	Number of wires connected per terminal	Wire size		Tightening torque
		Solid wire, Stranded wire	Wire ferrule with insulation sleeve	
FX5U CPU module built-in RS-485 port	One wire	0.2 to 0.5 mm^2 (AWG24 to 20)	0.2 to 0.5 mm^2 (AWG24 to 20)	0.22 to 0.25 N·m
	Two wires	0.2 mm^2 (AWG24)	—	
FX5UC CPU module built-in RS-485 port FX5-485-BD FX5-485ADP	One wire	0.3 to 0.5 mm^2 (AWG22 to 20)	0.3 to 0.5 mm^2 (AWG22 to 20)	
	Two wires	0.3 mm^2 (AWG22)	—	

Precautions

Do not tighten terminal screws exceeding the specified torque range. Failure to do so may cause equipment failures or malfunctions.

■Wire end treatment

With regard to the cable end treatment, use a stranded cable or solid cable as is, or use a wire ferrule with insulating sleeve.

- When using a stranded cable or solid cable as is
  - Twist the end of stranded wire and make sure that there are no loose wires.
  - Do not solder-plate the electric wire ends.

Dimensions of the cable end	
FX5U CPU module built-in RS-485 port	**FX5UC CPU module built-in RS-485 port, FX5-485-BD, FX5-485ADP**
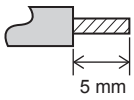	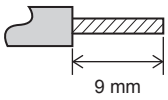

- When using a wire ferrule with insulation sleeve

Because it is difficult to insert a cable into an insulating sleeve depending on the thickness of the cable sheath, select the proper cable according to the outline drawing.

FX5U CPU module built-in RS-485 port	FX5UC CPU module built-in RS-485 port, FX5-485-BD, FX5-485ADP
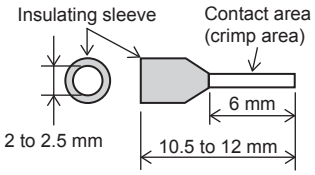	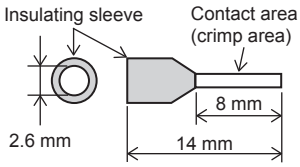

<Reference>

	Manufacturer	Model name	Crimping tool
FX5U CPU module built-in RS-485 port	PHOENIX CONTACT GmbH & Co. KG	AI 0.5-6 WH	CRIMPFOX 6 CRIMPFOX 6T-F
FX5UC CPU module built-in RS-485 port FX5-485-BD FX5-485ADP		AI 0.5-8 WH	

- Tool

For tightening the terminal, use a commercially available small screwdriver with straight tip that is not widened toward the end as shown below.

■Precautions

If the diameter of the screwdriver tip is too small, the required tightening torque cannot be achieved. To achieve the appropriate tightening torque shown in the previous page, use the following screwdriver or its equivalent (grip diameter: approximately 25 mm).

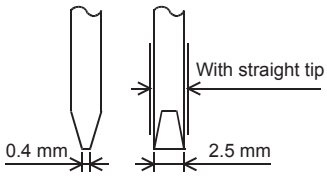

<Reference>

Manufacturer	Model name
PHOENIX CONTACT GmbH & Co. KG	SZS 0.4×2.5

Termination resistor setting

Make sure to provide a termination resistor at both ends of the wire.

The built-in RS-485 port, FX5-485-BD and FX5-485ADP have a built-in termination resistor.

Set the termination resistor selector switch as below.

Wiring	Termination resistor selector switch
Two-pair wiring	330 Ω
One-pair wiring	110 Ω

■FX5U CPU module built-in RS-485 port

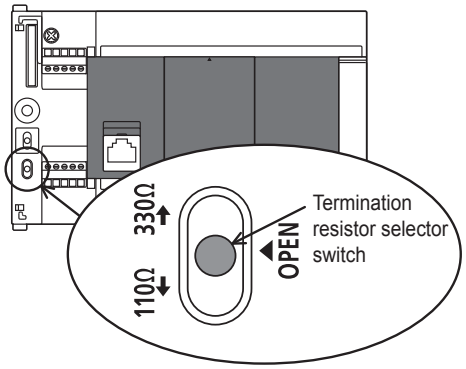

■FX5UC CPU module built-in RS-485 port

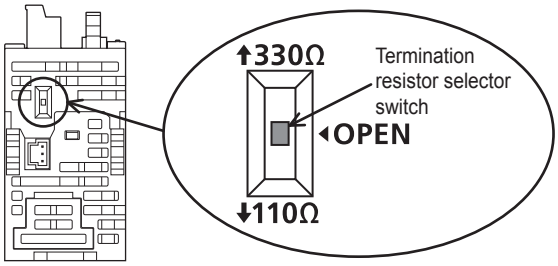

■FX5-485-BD

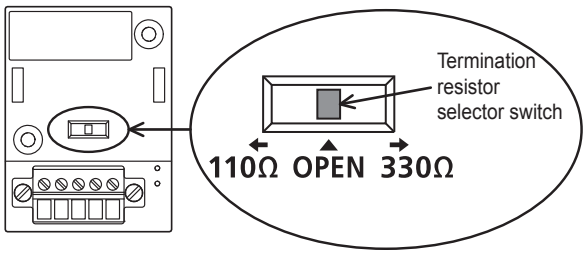

■FX5-485ADP

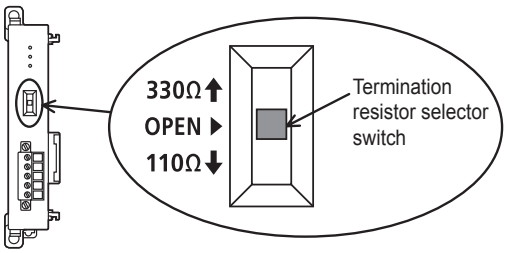

Connection diagram

■One-pair wiring

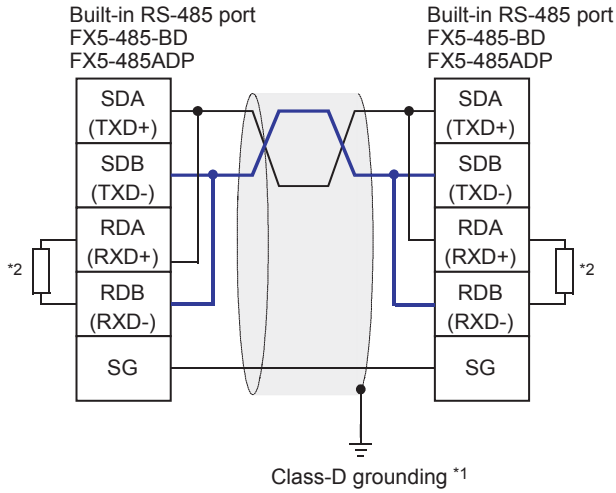

■Two-pair wiring

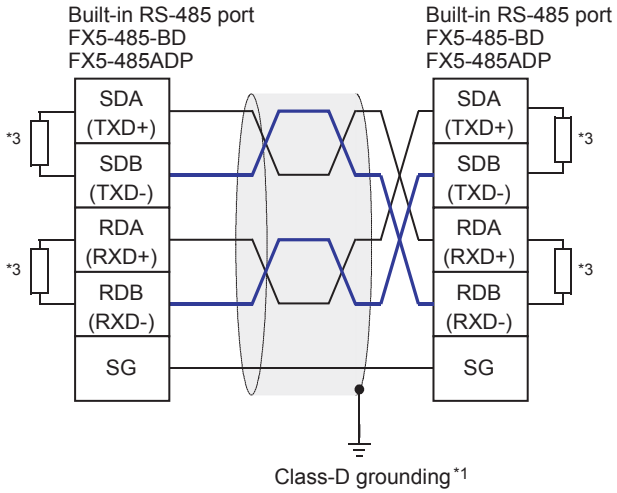

*1 Make sure to perform Class-D grounding on the shield of the twisted pair cable to be connected.

*2 Set the termination resistor selector switch to 110 Ω

*3 Set the termination resistor selector switch to 330 Ω

Grounding

Grounding should be performed as stated below.

- Perform D class grounding. (Grounding resistance: 100 Ω or less)
- Independent grounding should be performed for best results.

When independent grounding can not be performed, perform "shared grounding" as shown in the following figure.

For details, refer to the following.

📖MELSEC iQ-F FX5U User's Manual (Hardware)
📖MELSEC iQ-F FX5UC User's Manual (Hardware)

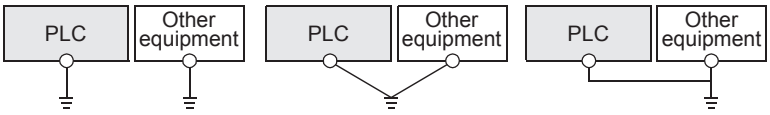

Independent grounding (Best condition) | Shared grounding (Good condition) | Common grounding (Not allowed)

- The grounding wire size should be AWG 14 (2 mm^2) or larger.
- Bring the grounding point close to the PLC as much as possible so that the ground cable can be shortened.

3.6 Communication Setting

For the FX5 communication settings of this function, parameters are set using GX Works3. For details about GX Works3, refer to 📖GX Works3 Operating Manual.

Setting of parameter differs according to the module used. The procedure for each module is as follows.

Built-in RS-485 port (CH1)

Navigation Window ⇨ Parameter ⇨ FX5UCPU⇨ Module Parameter ⇨ 485 Serial Port

Window

The following screen will be displayed if [Parallel Link] is set for the communication protocol type.

■Basic Settings

Item	Setting
⊟ *Communication Protocol Type*	Set communication protocol type.
Communication Protocol Type	Parallel Link

■Fixed Setting

Item	Setting
⊟ *Station Setting*	Set the host station.
Station Setting	Master
⊟ Link Mode	Set the link mode.
Link Mode	Normal
⊟ Error Judgment Time	Set the error judgement time.
Error Judgment Time	500 ms

■Link Device

Item	Setting
⊟ *Link Device Bit*	Set the start device number of the bit device for linking.
Device	M800
⊟ Link Device Word	Set the start device number of the word device for linking.
Device	D490

■SM/SD Setting

Item	Setting
⊟ *Latch Setting*	Set the latch of SM/SD device.
Station Setting	Do Not Latch
Link Mode	Do Not Latch
Error Judgment Time	Do Not Latch
⊟ FX3 Series Compatibility	Set the SM/SD device compatible with the FX3 series.
SM/SD for Compatibility	Disable

Communication board (CH2)

Navigation Window ⇨ Parameter ⇨ FX5UCPU ⇨ Module Parameter ⇨ Extended Board

Window

The following screen will be displayed if [FX5-485-BD] is set for the extended board and [Parallel link] is set for the communication protocol type. Fixed setting and SM/SD setting are the same as in the case of built-in RS-485 port (CH1).

■Basic Settings

Item	Setting
Expansion Board	Set the expansion board type.
Expansion Board	FX5-485-BD
Communication Protocol Type	Set communication protocol type.
Communication Protocol Type	Parallel Link

Communication adapter (CH3/CH4)

When an expansion adapter is used, add expansion adapter to Module Information.

Navigation window ⇨ Parameter ⇨ Module Information ⇨ Right-click ⇨ Add New Module

After adding the expansion adapter, make settings on the screen displayed from the following operation.

Navigation window ⇨ Parameter ⇨ Module Information ⇨ ADP1 to ADP6 (Communication adapter) ⇨ Module Parameter

Window

Each setting screen is the same as in the case of built-in RS-485 port (CH1).

Parameter setting details

Set the following items for the serial ports that use the parallel link. However, only one channel can be set to the parallel link.

Items			Setting value	Reference section
Basic Settings	Extended Board*1		When using this function, select [FX5-485-BD].	—
	Communication Protocol Type		When using this function, select [Parallel link].	
Fixed Setting	Master station/slave station setting		0: Master station 1: Slave station	Page 52
	Link mode setting		0: Normal parallel link mode 1: High-speed parallel link mode	
	Error determination setting		10 to 32767 (ms)	—
Link Device	Link Device Bit		M0 to M32767	Page 52
	Link Device Word		D0 to D7999	
SM/SD Setting	FX3 Series Compatibility	SM/SD for Compatible	Disable/CH1/CH2	Page 59

*1 Only in the case of communication board (CH2).

Setting is not required (fixed value) for the items below.

Items	Descriptions
Start bit	1 bit
Data length	7 bit
Parity	Even
Stop bit	1 bit
Baud rate	115200bps
Header	Not Added
Terminator	Not Added
Control Mode	None
Sum Check	Not Added
Control procedure	Form 1 (CR and LF are not added)

FX3 Series-compatible SM/SD

When using the FX3 Series compatible SM/SD storage area, set to use special devices for either the FX3 Series CH1 or CH2.
FX3 Series compatible devices corresponding to the specified channel can be used.
For details, refer to the following.
☞ Page 66 Related devices

3.7 Programming

This section explains how to set the parallel link and how to create programs.
There are two parallel link modes, normal parallel link mode and high-speed parallel link mode.
The modes vary in applicable devices and number of link points.
When connecting FX5 PLCs through the parallel link, set the master and slave stations in the same link mode.

Communication Settings

Serial communication setting are as follows. (☞ Page 57 Communication Setting)

Items		Setting	
		Master station	Slave station
Communication Protocol Type		Parallel link	
Fixed Setting	Master station/slave station setting	Master station	Slave station
	Link mode setting	Normal	
	Error determination setting	500	500
Link Device	Link Device Bit	M4000	M6000
	Link Device Word	D990	D1990

Contents of related devices

The devices used in the program are shown below. (☞ Page 66 Related devices)

Devices for setting parallel link

These devices are used for determining errors in the parallel link. Use these devices to output the link errors or use them in interlock sequence programs.

Device No.	Name	Descriptions
SM9090	Parallel link operation	ON during parallel link operation.
SM8500*1	Serial communication error	Turns ON when an error occurs in serial communication.

*1 Use the serial communication error (SM8500, SM8510, SM8520 or SM8530) corresponding to each channel executing the parallel link.

Link Device

■Device for master station

• Sending device

Device for sending information from master station to slave station

Device No.		Number of link points	Descriptions
■In the case of normal parallel link mode			
Internal relay	M4000 to M4099	100 points	The status of the master station device is automatically updated to the slave station device.
Word devices	D990 to D999	10 points	
■In the case of high-speed parallel link mode			
Word devices	D990, D991	2 points	The status of the master station device is automatically updated to the slave station device.

• Receiving device

Device for transferring information from slave station to master station. Do not change this device information at the master station. If such information is changed, the other station will not operate normally.

Device No.		Number of link points	Descriptions
■In the case of normal parallel link mode			
Internal relay	M4100 to M4199	100 points	The status of the slave station device is received and automatically updated to the master station device.
Word devices	D1000 to D1009	10 points	
■In the case of high-speed parallel link mode			
Word devices	D1000, D1001	2 points	The status of the slave station device is received and automatically updated to the master station device.

■Device for slave station

• Sending device

Device for sending information from slave station to master station

Device No.		Number of link points	Descriptions
■In the case of normal parallel link mode			
Internal relay	M6100 to M6199	100 points	The status of slave station device is automatically updated to the master station device.
Word devices	D2000 to D2009	10 points	
■In the case of high-speed parallel link mode			
Word devices	D2000, D2001	2 points	The status of slave station device is automatically updated to the master station device.

• Receiving device

Device for transferring information from master station to slave station. Do not change this device information at the slave station. If such information is changed, the other station will not operate normally.

Device No.		Number of link points	Descriptions
■In the case of normal parallel link mode			
Internal relay	M6000 to M6099	100 points	The status of the master station device is received and automatically updated to the slave station device.
Word devices	D1990 to D1999	10 points	
■In the case of high-speed parallel link mode			
Word devices	D1990, D1991	2 points	The status of the master station device is received and automatically updated to the slave station device.

Communication test

It is recommended to wire the master and slave stations, perform communication settings, and then execute the communication test using the following procedure to confirm proper operation.
Communication test program is not required during operation.

Communication test process

1. After writing the communication configuration of the master and slave stations and the program, turn OFF→ON or reset the power supply to the FX5 PLC.
2. Check if the SD and RD LEDs of the used channel are flashing. If the LEDs are OFF, refer to troubleshooting. (☞ Page 64)
3. Operate the PLC inputs (X0 to X3) of the master station, and check that the outputs (Y0 to Y3) of the slave station turn ON.
4. Operate the PLC inputs (X0 to X3) of the slave station, and check that the outputs (Y0 to Y3) of the master station turn ON.

Test program for communication (master station)

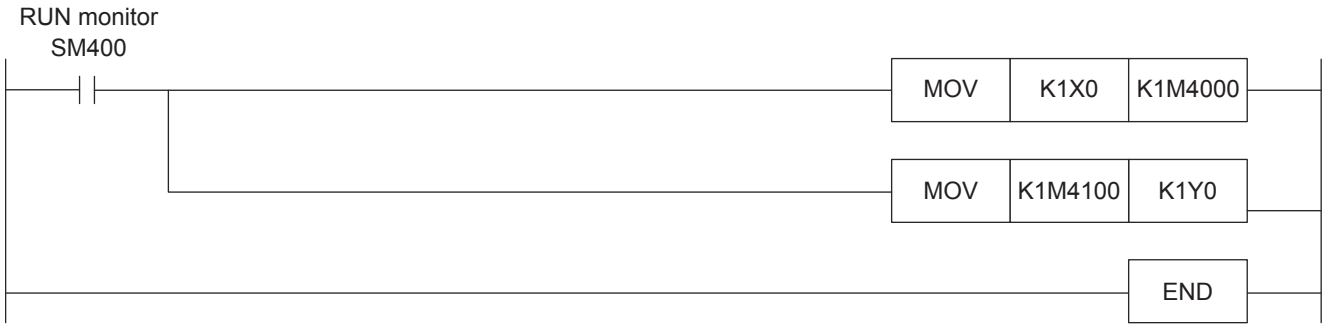

Test program for communication (slave station)

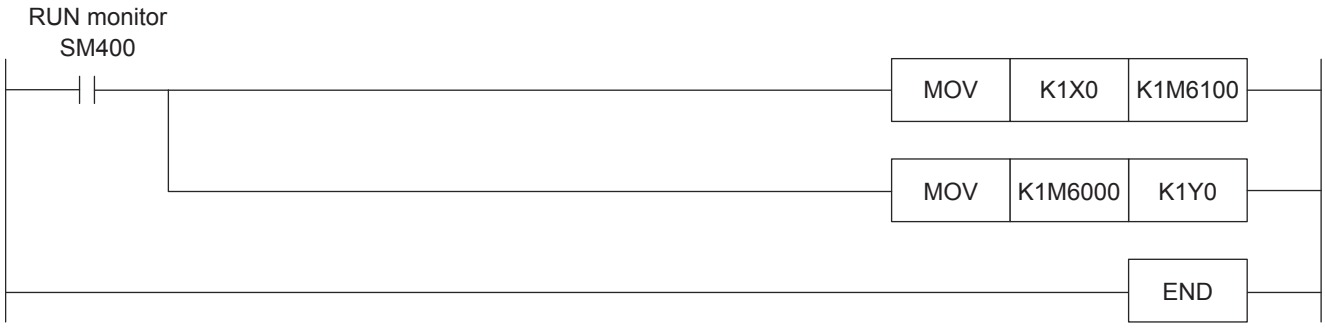

Creation of programs for master station

Create programs for the master station.

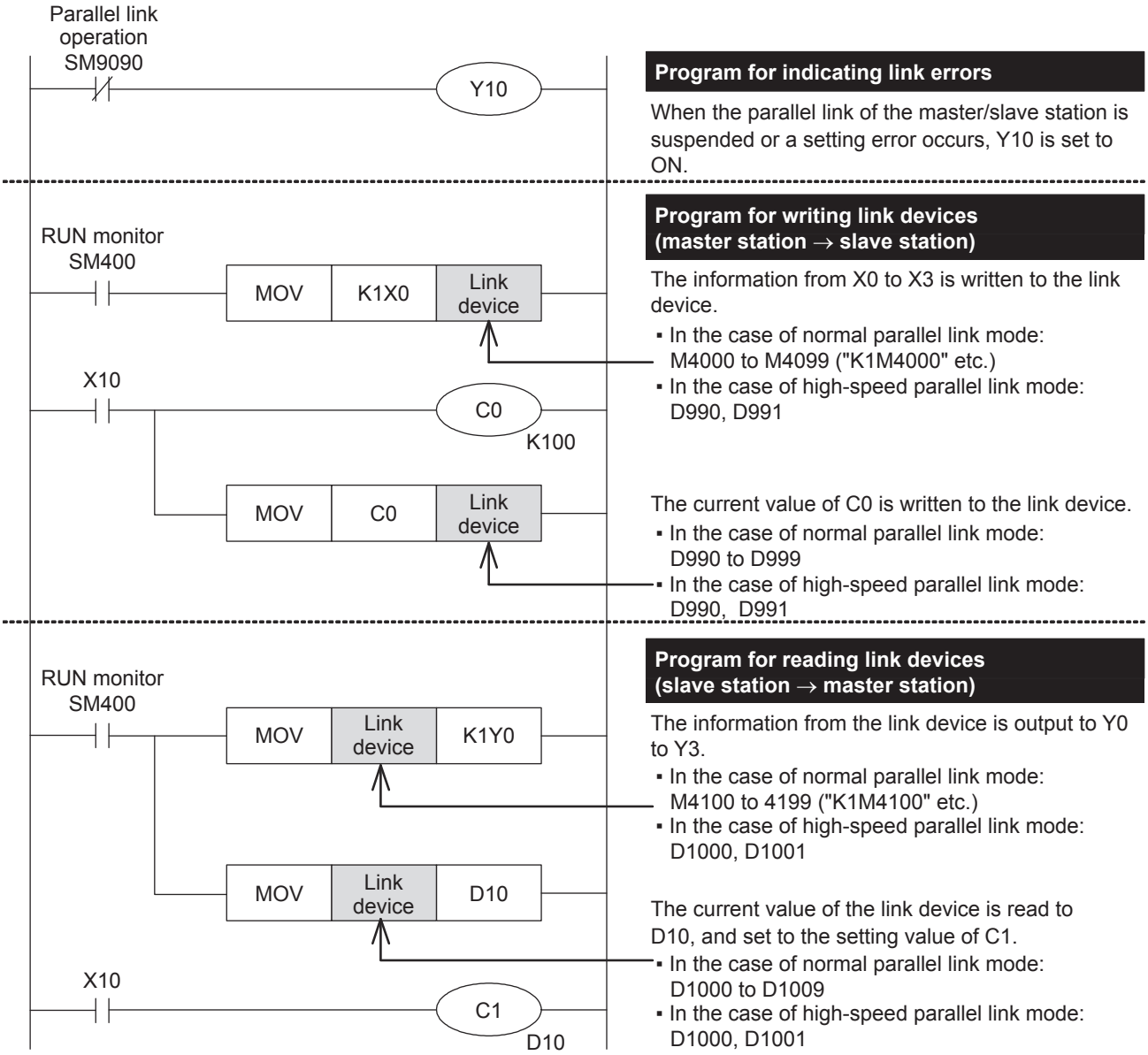

Creation of programs for slave station

Create programs for the slave station.

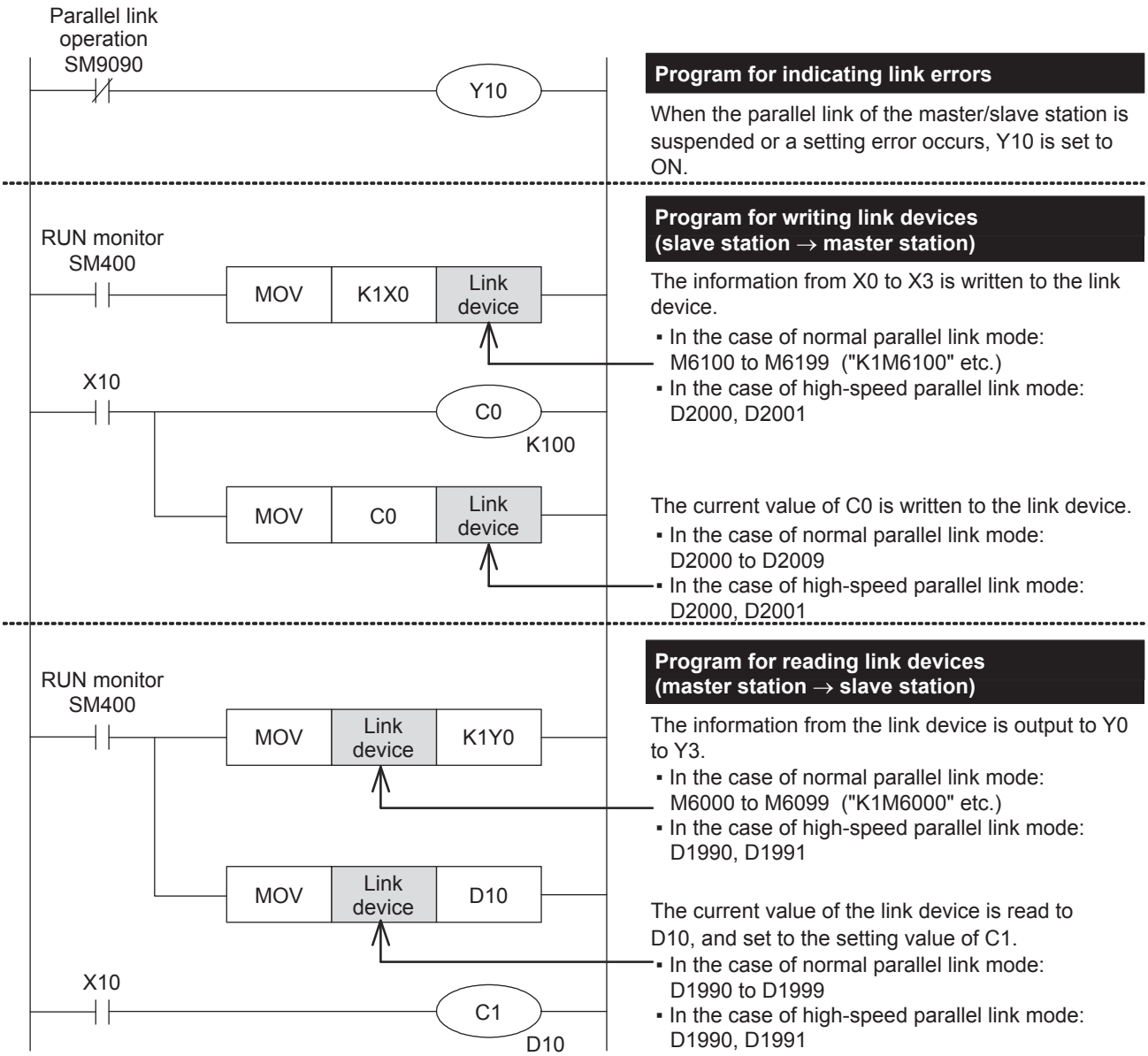

Cautions on program creation

- Do not change the contents of link devices at other stations. When a link error occurs, the link device information is held in the status just before occurrence of the link error. Create program to operate safely.
- Link device update in the parallel link is asynchronous to operations of the sequence program. The link devices are not updated in the middle of ladder operation.

3.8 Troubleshooting

This section explains troubleshooting.

Checking communication status based on LED indication

Check the status of the LED indications of [RD] and [SD] on the CPU module or the communication board/communication adapter.

LED status		Operation status
RD	SD	
On	On	The data is being sent or received.
On	Off	The data is received, but is not sent.
Off	On	The data is being sent, but is not received.
Off	Off	The data is not being sent or received.

While parallel link is executed normally, both LEDs flash brightly.
If the LEDs are not flashing, check the wiring or the master or slave station setting.

Checking installation and wiring

- Connection status

The communication cannot be operated if the PLC and the communication board/communication adapter are not connected correctly.
For the connection procedure, refer to the following.
📖MELSEC iQ-F FX5U User's Manual (Hardware)
📖MELSEC iQ-F FX5UC User's Manual (Hardware)

- Wiring

Verify that all communication equipment is correctly wired. (☞ Page 54 Wiring)

Checking sequence program

When the channel number that uses parallel link is specified in the instructions to be used in the inverter communication, non-protocol communication or predefined protocol support function, some error may occur. (☞ Page 236 Combined Use of Serial Communication)

Checking the communication settings

Verify that the protocol type is "parallel link." When the protocol type is not "parallel link," communication will not function correctly. (☞ Page 57 Communication Setting)
After changing any communication setting, make sure to turn the PLC power from OFF→ON, or reset.

Checking absence/presence of errors

Confirm whether an error has not occurred in the PLCs at the master or slave station. To confirm, check the following flags.

Parallel link operation

"Parallel link operation" flag is ON while the parallel link is running. Verify that the device specified in the table below is ON.

FX5 dedicated	FX3 Series compatible	Name	Descriptions
SM9090	SM8072	Parallel link operation	ON: In normal running state OFF: In stopped state

Serial communication error

■Error flags

If a communication error occurs in the parallel link, the serial communication error flag turns ON.

Verify that the device specified in the table below is ON.

FX5 dedicated				FX3 Series compatible		Name	Descriptions
CH1	CH2	CH3	CH4	CH1	CH2		
SM8500	SM8510	SM8520	SM8530	SM8063	SM8438	Serial communication error	Turns ON when an error occurs in serial communication.

■Error code

When the serial communication error flag turns ON, the error code is stored in the device specified in the table below.

FX5 only				FX3 Series compatible		Name	Descriptions
CH1	CH2	CH3	CH4	CH1	CH2		
SD8500	SD8510	SD8520	SD8530	SD8063	SD8438	Serial communication error code	Stores the error code when a serial communication error occurs.

Error code

The error codes (hexadecimal) stored in the devices for error code are as follows. When an error occurs, check the following error codes.

Error code (Hexadecimal)	Error name	Error handling
2220H	Parameter not detected	Write the project again.
2221H	Parameter error	Correct the setting value of the parameter and write the project again.
7001H	Communication CH parameter setting duplication error	Confirm whether the serial port is not used for other communication. (☞ Page 64)
7010H	Parity error, overrun error or framing error	Check the wiring. (☞ Page 54)
7812H	Parallel link character error	
7813H	Parallel link sum error	
7814H	Parallel link format error	

3.9 Related devices

List of related devices

Special relays

■FX5 dedicated

Device No.				Name	Descriptions	Detection	R/W
CH1	CH2	CH3	CH4				
SM8500	SM8510	SM8520	SM8530	Serial communication error	Turns ON when an error occurs in serial communication.	M, L	R
SM9090				Parallel link operation	ON during parallel link operation.	M, L	R

R: Read only, M: Master station, L: Slave station

■FX3 Series compatible

Device No.		Name	Descriptions	Detection	R/W
CH1	CH2				
SM8063	SM8438	Serial communication error	Turns ON when an error occurs in serial communication.	M, L	R
SM8072		Parallel link operation	ON during parallel link operation.	M, L	R

R: Read only, M: Master station, L: Slave station

Special registers

■FX5 dedicated

Device No.				Name	Descriptions	Detection	R/W
CH1	CH2	CH3	CH4				
SD8500	SD8510	SD8520	SD8530	Serial communication error code	Stores the error code when a serial communication error occurs.	M, L	R
SD8502	SD8512	SD8522	SD8532	Serial communication settings	Stores the communication parameter set in the PLC.	M, L	R
SD9090				Master station/slave station setting	Stores the property setting value of the master/slave station.	M, L	R
SD9091				Link mode setting	Stores the property setting value of the link mode.	M, L	R
SD9092				Error determination time setting	Stores the property setting value of the error determination time.	M, L	R
SD8503	SD8513	SD8523	SD8533	Serial communication operation mode	Stores status of the current communication being executed.	M, L	R

R: Read only, M: Master station, L: Slave station

■FX3 Series compatible

Device No.		Name	Descriptions	Detection	R/W
CH1	CH2				
SD8063	SD8438	Serial communication error code	Stores the error code when a serial communication error occurs.	M, L	R
SD8419	SD8439	Serial communication operation mode	Stores status of the current communication being executed.	M, L	R

R: Read only, M: Master station, L: Slave station

Details of related devices

The devices described below are used in the parallel link.
The "FX3 Series-compatible" device operates only for the channel which is specified in the SM/SD settings.

Serial communication error

Turns ON when an error occurs in serial communication.

FX5 dedicated				FX3 Series compatible		Descriptions	R/W
CH1	CH2	CH3	CH4	CH1	CH2		
SM8500	SM8510	SM8520	SM8530	SM8063	SM8438	Turns ON when an error occurs in serial communication.	R

R: Read only

After a device above turns ON, the error code is stored in the corresponding device below.

FX5 dedicated				FX3 Series compatible		Name	Descriptions
CH1	CH2	CH3	CH4	CH1	CH2		
SD8500	SD8510	SD8520	SD8530	SD8063	SD8438	Serial communication error code	Stores the error code when a serial communication error occurs.

Precautions

Do not turn ON or OFF with program or engineering tool.
Serial communication error is not cleared even after communication is restored to normal state. Devices are cleared when power is turned OFF→ON, STOP→RUN, RESET or SM50 (Error Detection Reset Completion) is turned ON.

Parallel link operation

Device for confirming whether the parallel link is running

FX5 dedicated	FX3 Series compatible	Descriptions	R/W
SM9090	SM8072	ON: In normal running state OFF: In stopped state	R

R: Read only

Precautions

Do not turn ON or OFF with program or engineering tool.

Serial communication error code

Stores the error code for serial communication (☞ Page 65).

FX5 dedicated				FX3 Series compatible		Descriptions	R/W
CH1	CH2	CH3	CH4	CH1	CH2		
SD8500	SD8510	SD8520	SD8530	SD8063	SD8438	Stores the error code when the serial communication error occurs.	R

R: Read only

Precautions

Do not change the value with program or engineering tool.
Serial communication errors are not cleared even after communication has recovered its normal status. Devices are cleared when power is turned OFF→ON, STOP→RUN, RESET or SM50 (Error Detection Reset Completion) is turned ON.

Serial communication setting

Stores the set communication parameter in the communication settings.

FX5 only				FX3 Series compatible		Descriptions	R/W
CH1	CH2	CH3	CH4	CH1	CH2		
SD8502	SD8512	SD8522	SD8532	SD8405	SD8425	Stores the setting of the communication parameter.	R

R: Read only

The description of the communication parameter is as follows.

Bit No.	Name	Descriptions	
		0 (bit is OFF)	1 (bit is ON)
b0	Data length	7 bits	—
b1 b2	Parity bit	b2, b1 (1, 1): Even	
b3	Stop bit	1 bit	—
b4 b5 b6 b7	Baud rate	b7, b6, b5, b4 (1, 1, 0, 1): 115200 bps	
b10 b11 b12	Control mode	b12, b11, b10 (1,1,1): RS-485 half-duplex, bi-directional (RS-485)	

Precautions

Do not change the value with program or engineering tool.

Master station/slave station setting

Stores the master/slave station setting value in the serial communication settings.

FX5 dedicated	Descriptions	R/W
SD9090	0: Master station 1: Slave station	R

R: Read only

Precautions

Do not change the value with program or engineering tool.

Link mode setting

Stores the property setting value of the link mode in the serial communication settings.

FX5 dedicated	Descriptions	R/W
SD9091	0: Normal parallel link mode 1: High-speed parallel link mode	R

R: Read only

Precautions

Do not change the value with program or engineering tool.

Error determination time setting

Stores the error determination time setting value in the serial communication settings.

FX5 dedicated	Descriptions	R/W
SD9092	10 to 32767 (ms)	R

R: Read only

Precautions

Do not change the value with program or engineering tool.

Serial communication operation mode

Stores the communication function code of the serial communication being used.

FX5 dedicated				FX3 Series compatible		Descriptions	R/W
CH1	CH2	CH3	CH4	CH1	CH2		
SD8503	SD8513	SD8523	SD8533	SD8419	SD8439	0: MELSOFT connection or MC protocol 3: N:N Network Communication 5: Non-protocol Communication 6: Parallel Link Communication 7: Inverter Communication 9: MODBUS RTU Communication 12: Predefined protocol support Other than above: Not used	R

R: Read only

Precautions

Do not change the value with program or engineering tool.

4 MC PROTOCOL

An MC protocol is a protocol to access an equipment compatible with MC protocol from a CPU module and external equipment (PC or indicator etc.) using serial communication.
In case of a serial port of FX5, communication is possible by MC protocol QnA-compatible 3C/4C frame.

4.1 Function Summary

An MC protocol function is a function to access an equipment compatible with MC protocol from a CPU module and counterpart device equipments (PC or GOT etc.) using serial communication.

Features

Monitoring of the system is enabled because device of MC protocol compatible equipment can be read by sending an MC protocol request message, as shown in the following diagram, from external equipment connected by serial communication.
Further, it can even write or reset a MC protocol compatible equipment.

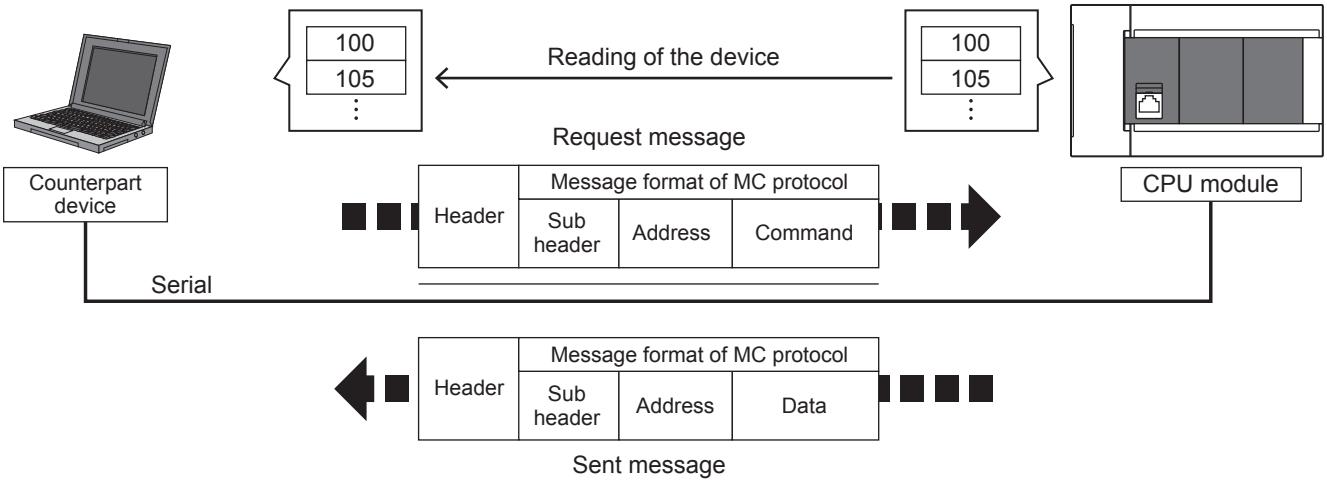

4.2 Procedures before Operation

The flow chart below shows the MC protocol setting procedures up until data link.

1. Check communication specifications

For communication specifications, link specifications, and link time, refer to ☞ Page 72 Specifications.

2. System configuration and selection

For select communication equipment, refer to ☞ Page 71 System Configuration.

3. Wiring

For wiring with twisted pair cable, and wiring example, refer to ☞ Page 74 Wiring.

4. Communication settings*1

For communication settings of communication device, refer to ☞ Page 79 Communication Setting.

5. Program creation

*1 For details on operating procedure of GX Works3, refer to the manual below.
GX Works3 Operating Manual

4.3 System Configuration

This section outlines the system configuration required to use the MC protocol.

You can use up to a maximum of 4 channels (FX5UC is maximum of 3 channels) of MC protocol function in the CPU module using the built-in RS-485 port, communication board and communication adapters.

Allotment of serial ports is set to the following fixed numbers, regardless of system configuration.

■FX5U CPU module

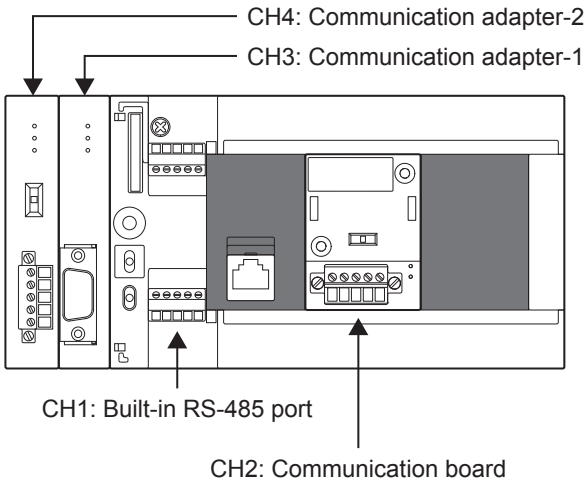

■FX5UC CPU module

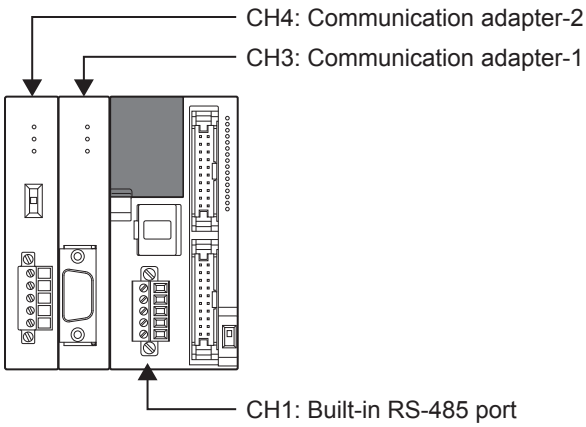

Communication device

		Serial port	Important points for selection	Overall distance
Built-in RS-485 port		CH1	Since it is built-into the CPU module, there is no need to add equipment.	50 m or less
Communication board	FX5-485-BD	CH2	Mounted on top of the CPU module, there is no change in the installation space requirements.	50 m or less
	FX5-232-BD			15 m or less
Communication adapter	FX5-485ADP	CH3, CH4*1	Mount the communication adapter to the left of the CPU module.	1200 m or less
	FX5-232ADP			15 m or less

*1 Assigned to CH3 or CH4 in order of proximity to CPU module.

4.4 Specifications

Communication specifications

Communication is executed within the specifications shown in the table below. Set the baud rate, etc. in the parameter settings of an engineering tool.

Items		Specifications	Remarks
Number of connectable units		16 maximum	—
Transmission standard		RS-485 or RS-232C standard	—
Maximum total extension distance		RS-485 • When FX5-485ADP is used: 1200 m or less • When using built-in RS-485 port or FX5-485-BD: 50m or less RS-232C: 15 m or less	Distance varies depending on communication equipment type.
Protocol type		MC protocol (dedicated protocol) 3C/4C frame	There are format1/ format4 /format5.
Control procedure		—	—
Communication method		Half-duplex, bidirectional communication	—
Baud rate		300, 600, 1200, 2400, 4800, 9600, 19200, 38400, 57600 or 115200 bps	—
Character format	Start bit	1 bit	—
	Data length	7 bits/8 bits	When the protocol type is format5, the data length should be 8 bits.
	Parity bit	None, odd or even	—
	Stop bit	1 bit/2 bits	—
Header		Fixed	—
Terminator		Fixed	—
Control line		RS-485: None/ RS-232C: Provided	—
Sum check		Provided or not provided	—

Link specifications

Link time

■Data transfer

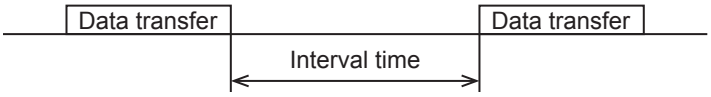

■Data transfer time

R: Number of read data points, W: Number of written data points, T: Time to send or receive one character, V: Interval time, S: Max Scan Time of PLC, D: Message waiting time

(1) 3C Frame

Time to read continuous word devices (data registers etc.) in one station (ms)

$=(43^{*1} + 4 \times R^{*2}) \times T$ (ms) + V + S (SD524) $\times$ 3 + D

Time to write continuous word devices (data registers etc.) in one station (ms)

$=(42^{*1} + 4 \times W^{*2}) \times T$ (ms) + V + S (SD524) $\times$ 3 + D

*1 This is the number of characters when format1 is used and the sum check is not provided at the time of execution of batch read/write command.
When format4 is used, add "4" to this value.
Further, when the sum check is provided, add "4" to this value also.
Further, when specifying an extension, add "+7" to this value also.

*2 The number of points is counted in 1-word units.

(2) 4C Frame: In case of ASCII code (When format1 to format4 are used)

Time to read continuous word devices (data registers etc.) in one station (ms)

$=(49^{*3} + 4 \times R^{*4}) \times T$ (ms) + V + S (SD524) $\times$3 + D

Time to write continuous word devices (data registers etc.) in one station (ms)

$=(48^{*3} + 4 \times W^{*4}) \times T$ (ms) + V + S (SD524) $\times$3 + D

*3 This is the number of characters when format1 is used and the sum check is not provided at the time of execution of batch read/write command.
When format4 is used, add "4" to this value.
Further, when the sum check is provided, add "4" to this value also.
Further, when specifying an extension, add "+7" to this value also.

*4 The number of points is counted in 1-word units.

(3) 4C Frame: In case of binary code (When format5 is used)

Time to read continuous word devices (data registers etc.) in one station (ms)

$=(42^{*5} + 4 \times R^{*6}) \times T$ (ms) + V + S (SD524) $\times$ 3 + D

Time to write continuous word devices (data registers etc.) in one station (ms)

$=(40^{*5} + 4 \times W^{*6}) \times T$ (ms) + V + S (SD524) $\times$ 3 + D

*5 This is the number of characters when format5 is used and the sum check is not provided at the time of execution of batch read/write command.
Further, when the sum check is provided, add "4" to this value also.
Further, when specifying an extension, add "+7" to this value also.
When "10H" exists in the data area, since DLE "10H" is added just before "10H", add “+ "10H numeral”.

*6 The number of points is counted in 1-word units.

■Time to send or receive one character

The table below shows the time required to send or receive one character when the start bit is 1-bit, the data length is 7-bit, the parity is 1-bit, and the stop bit is 1-bit (total 10-bits).

Transmission speed (baud rate) (bps)	Time to send or receive 1 character (ms)
300	33.34
600	16.67
1200	8.34
2400	4.17
4800	2.08
9600	1.04
19200	0.52
38400	0.26
57600	0.17
115200	0.08

The tables below show the data transfer times depending on the number of continuously read or written word devices at transmission speeds of 9600 bps and 19200 bps when the message waiting time is 0 ms*1, the maximum scan time is 20 ms, and the interval time is 100 ms.

- When the transmission speed is 9600 bps (Unit: Second)

Number of data points	Number of stations		
	Station No. 1	Station No. 8	Station No. 16
10 points	0.3	1.9	3.7
32 points	0.4	2.6	5.2
64 points	0.5	3.7	7.3

- When the transmission speed is 19200 bps (Unit: Second)

Number of data points	Number of stations		
	Station No. 1	Station No. 8	Station No. 16
10 points	0.2	1.6	3.2
32 points	0.3	2.0	3.9
64 points	0.4	2.5	5.0

When the types of read or written devices increase, "Data transfer time shown in above table $\times$ Number of device types" is required.

When the number of read or written points exceeds "64", the transfer time increases.

Accordingly, for achieving efficient data transfer, it is recommended to decrease the number of types of transferred devices and use as many continuous device numbers as possible.

*1 When RS-485 one-pair wiring using FX-485PC-IF is adopted, the message waiting time (for every exchange) must be 70 to 150ms.
When RS-485 two-pair wiring or RS-232C is adopted, the message waiting time becomes 0ms.

4.5 Wiring

This section explains the wiring.

Wiring procedure

1. Select the connection method

Select the connection method suitable to the application. (☞ Page 74 Selecting connection method)

2. Make arrangements for wiring

Prepare cables required for wiring. (☞ Page 75 Cable)

3. Turn OFF the PLC power

Before wiring, make sure that the PLC power is OFF.

4. Wire the communication equipment.

Connect the RS-485 communication equipment. (☞ Page 77 Connection diagram)

Selecting connection method

When using MC protocol 3C/4C frame, connection can be achieved in accordance with RS-232C or RS-485 (RS-422) communication.

In FX5, it is possible to use a serial port for up-to a maximum of 4 channels simultaneously by using MC protocol.

Depending on each serial port, the available communication and channel number are decided.

In case of RS-232C communication (1:1)

For communication in accordance with RS-232C, it is 1-to-1 connection. Make sure that the total extension distance is 15 m or less.

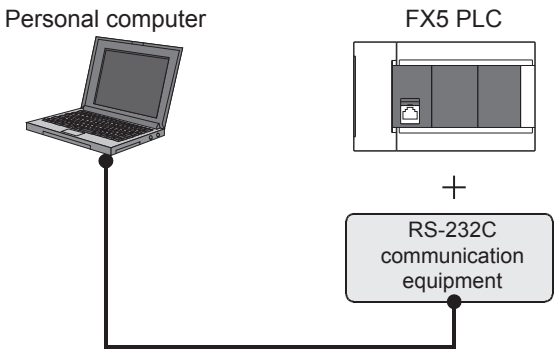

In case of RS-485 (RS-422) communication (1:N)

For communication in accordance with RS-485 (RS-422), up to 16 PLC Slave Nodes can be connected.

Make sure that the total extension distance is 1200m or less. (When using built-in RS-485 port or FX5-485-BD, 50m or less)

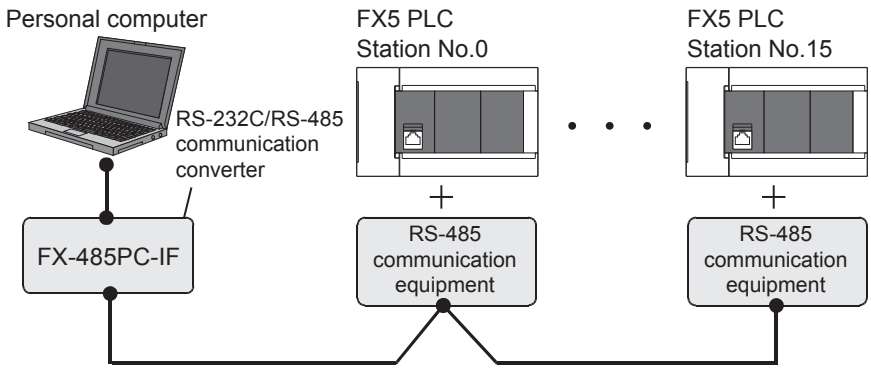

One-pair wiring and two-pair wiring are applicable for communication in accordance with RS-485 (RS-422). The wiring method is determined for each application. Refer to the table below, and perform suitable wiring.

		One-pair wiring	Two-pair wiring
MC protocol*1	When the message waiting time should be 70 ms or less	×	○
	When the message waiting time may be more than 70 ms	◎*2	○

◎: Recommended wiring method, ○: Applicable wiring method, ×: Non-applicable wiring method

*1 When computer link is added to an existing system, adopt the wiring method used in the existing system.
*2 "Echo" is generated when the FX-485PC-IF is used in one-pair wiring.
Take proper countermeasures in the computer so that the echo can be ignored.

Cable

Select cables using the procedure described below.

4

Twisted pair cable (RS-485)

Use shielded twisted pair cables for connecting RS-485 communication equipment.
The specifications of the cables used in wiring are shown.

■RS-485 cable specifications

Items	Description
Cable type	Shielded cable
Number of pairs	2p, 3p
Conductor resistance (20℃)	88.0 Ω/km or less
Insulation resistance	10000 MΩ-km or more
Voltage resistance	500 V DC, 1minute
Electrostatic capacitance (1 kHz)	60 nF/km or less as an average
Characteristic impedance (100 kHz)	110±10 Ω

■Cable structural drawing (reference)

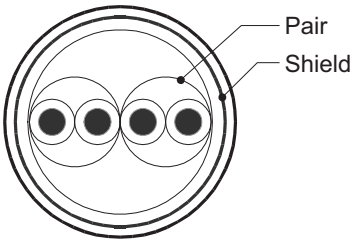

Example of two-pair cable structural drawing

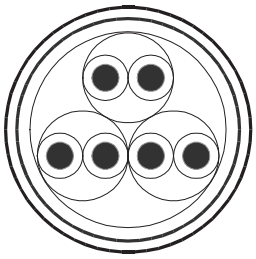

Example of three-pair cable structural drawing

Connecting cables

The table below shows applicable cables and tightening torques.

	Number of wires connected per terminal	Wire size		Tightening torque
		Solid wire, Stranded wire	Wire ferrule with insulation sleeve	
FX5U CPU module built-in RS-485 port	One wire	0.2 to 0.5 mm^2 (AWG24 to 20)	0.2 to 0.5 mm^2 (AWG24 to 20)	0.22 to 0.25 N·m
	Two wires	0.2 mm^2 (AWG24)	—	
FX5UC CPU module built-in RS-485 port FX5-485-BD FX5-485ADP	One wire	0.3 to 0.5 mm^2 (AWG22 to 20)	0.3 to 0.5 mm^2 (AWG22 to 20)	
	Two wires	0.3 mm^2 (AWG22)	—	

Precautions

Do not tighten terminal screws exceeding the specified torque range. Failure to do so may cause equipment failures or malfunctions.

■Wire end treatment

With regard to the cable end treatment, use a stranded cable or solid cable as is, or use a wire ferrule with insulating sleeve.

- When using a stranded cable or solid cable as is

- Twist the end of stranded wire and make sure that there are no loose wires.

- Please do not solder plate the ends of the cable.

Dimensions of the cable end	
FX5U CPU module built-in RS-485 port	**FX5UC CPU module built-in RS-485 port, FX5-485-BD, FX5-485ADP**
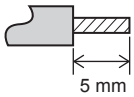	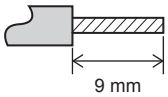

- When using a wire ferrule with insulation sleeve

Because it is difficult to insert a cable into an insulating sleeve depending on the thickness of the cable sheath, select the proper cable according to the outline drawing.

FX5U CPU module built-in RS-485 port	FX5UC CPU module built-in RS-485 port, FX5-485-BD, FX5-485ADP
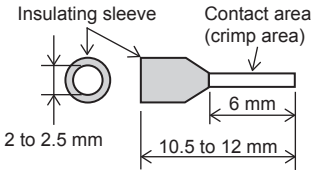	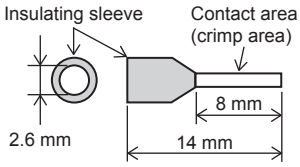

<Reference>

	Manufacturer	Model name	Crimping tool
FX5U CPU module built-in RS-485 port	PHOENIX CONTACT GmbH & Co. KG	AI 0.5-6WH	CRIMPFOX 6 CRIMPFOX 6T-F
FX5UC CPU module built-in RS-485 port FX5-485-BD FX5-485ADP		AI 0.5-8WH	

- Tool

For tightening the terminal, use a commercially available small screwdriver with straight tip that is not widened toward the end as shown below.

■Precautions

If the diameter of the screwdriver tip is too small, the required tightening torque cannot be achieved. To achieve the appropriate tightening torque shown in the previous page, use the following screwdriver or its equivalent (grip diameter: approximately 25 mm).

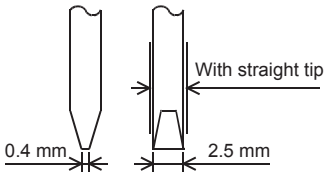

<Reference>

Manufacturer	Model name
PHOENIX CONTACT GmbH & Co. KG	SZS 0.4×2.5

Termination resistor setting

Make sure to provide a termination resistor at both ends of the wire.
The built-in RS-485 port, FX5-485-BD and FX5-485ADP have a built-in termination resistor.
Set the termination resistor selector switch as below.

Wiring	Termination resistor selector switch
Two-pair wiring	330 Ω
One-pair wiring	110 Ω

■FX5U CPU module built-in RS-485 port

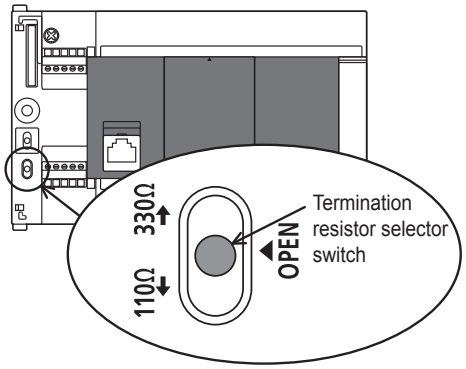

■FX5UC CPU module built-in RS-485 port

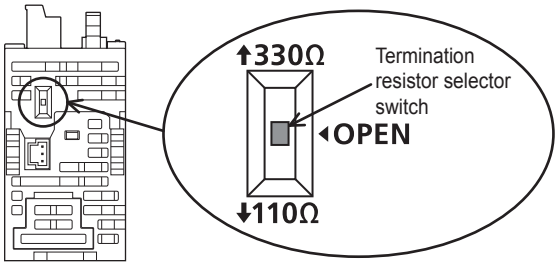

■FX5-485-BD

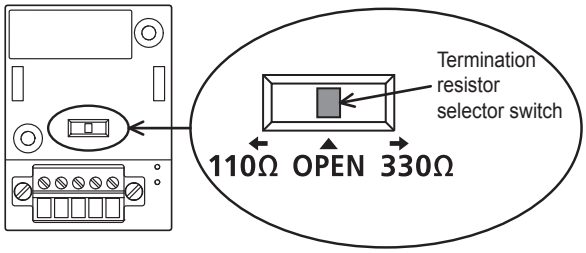

■FX5-485ADP

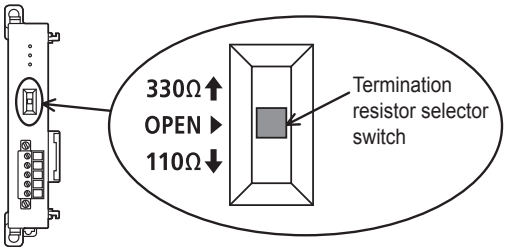

Connection diagram

RS-232C

Representative wiring examples are shown in this section. When pin numbers in the counterpart equipment are different, wire the pins as shown below.

■Connection diagram between FX5 and personal computer

PLC side		External equipment operating in accordance with RS-232C			
Name	FX5-232ADP FX5-232-BD	Name	Using CS/RS	Name	Using DR/ER
	9-pin D-Sub (female)		9-pin D-Sub		9-pin D-Sub
RD (RXD)	2	RD (RXD)	2	RD (RXD)	2
SD (TXD)	3	SD (TXD)	3	SD (TXD)	3
ER (DTR)	4	RS (RTS)	7	ER (DTR)	4
SG (GND)	5	SG (GND)	5	SG (GND)	5
DR (DSR)	6	CS (CTS)	8	DR (DSR)	6

■Connection diagram between FX-485PC-IF and the personal computer

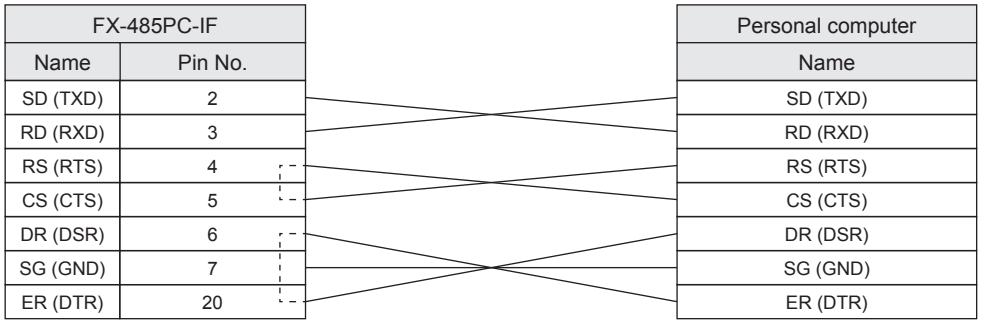

RS-485/RS-422

■One-pair wiring

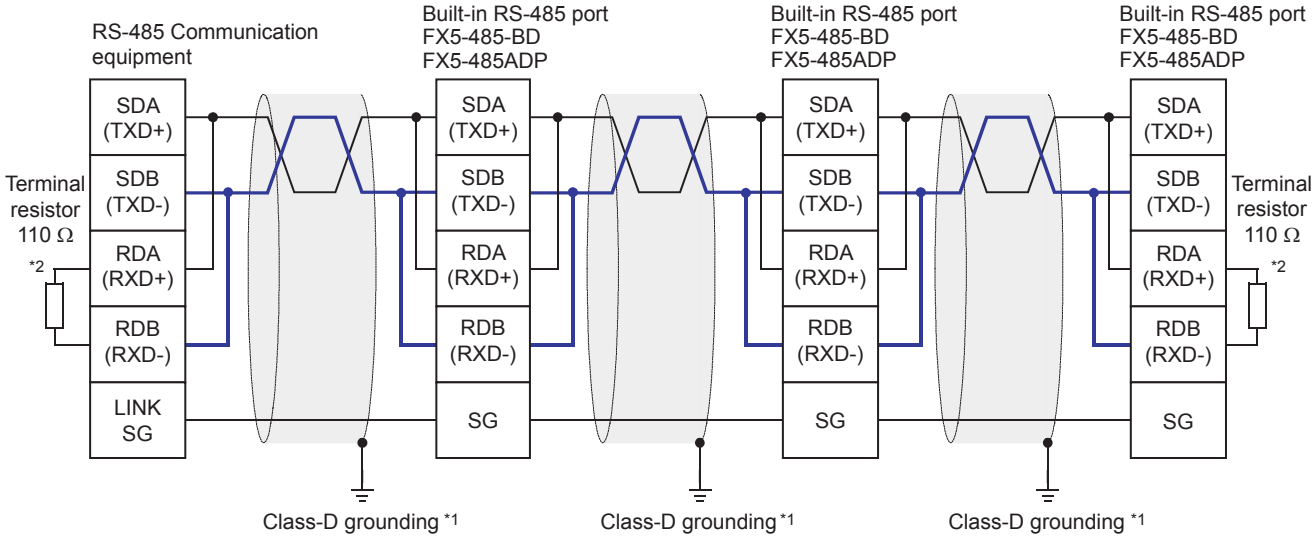

*1 Make sure to perform Class-D grounding on the shield of the twisted pair cable to be connected.

*2 Make sure to provide a termination resistor at both ends of the wire. The built-in RS-485 port, FX5-485-BD and FX5-485ADP have built-in termination resistors. Set the termination resistor selector switch to 110 Ω.

■Two-pair wiring

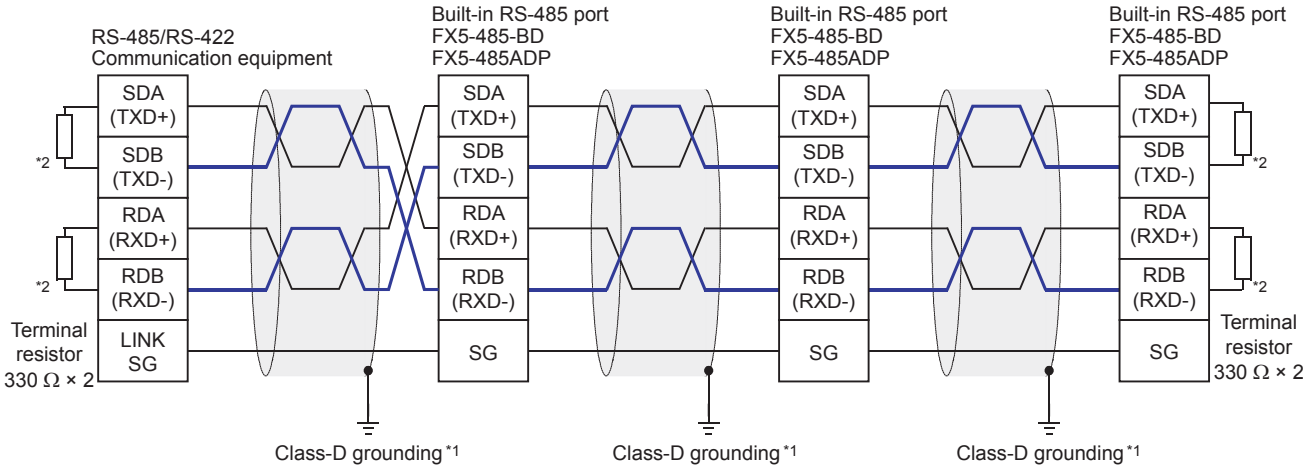

*1 Make sure to perform Class-D grounding on the shield of the twisted pair cable to be connected.

*2 Make sure to provide a terminal resistor at the end of each line. Set built-in RS-485 port, FX5-485-BD, and FX5-485ADP to 330 Ω depending on the terminal resistor selector switch.

Grounding

Grounding should be performed as stated below.

- Perform D class grounding. (grounding resistance: 100 Ω or less)
- Independent grounding should be performed for best results.

When the independent grounding cannot be performed, perform "shared grounding" as shown in the following figure.

For details, refer to the following.

MELSEC iQ-F FX5U User's Manual (Hardware)
MELSEC iQ-F FX5UC User's Manual (Hardware)

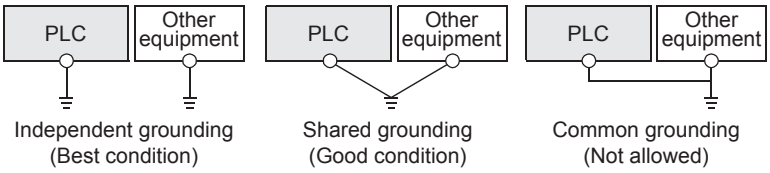

- The grounding wire size should be AWG 14 (2 mm^2) or larger.
- Bring the grounding point close to the PLC as much as possible so that the ground cable can be shortened.

4.6 Communication Setting

For the FX5 communication settings of this function, parameters are set using GX Works3. For details about GX Works3, refer to GX Works3 Operating Manual.

Setting of parameter differs according to the module used. The procedure for each module is as follows.

Built-in RS-485 port (CH1)

Navigation Window ⇨ Parameter ⇨ FX5UCPU ⇨ Module Parameter ⇨ 485 Serial Port

Window

The following screen will be displayed if [MC Protocol] is set for the communication protocol type.

■Basic Settings

Item	Setting
⊟ *Communication Protocol Type*	Set communication protocol type.
Communication Protocol Type	MC Protocol
⊟ Advanced Settings	Set detailed setting.
Data Length	7bit
Parity Bit	Odd
Stop Bit	1bit
Baud Rate	9,600bps
Sum Check Code	Not Added

■Fixed Setting

Item	Setting
⊟ *Station Number*	Set the station number of the PLC.
Station Number	0
⊟ Message Pattern	Set the MC Protocol message pattern.
Message Pattern	Pattern 1 (X, Y OCT)
⊟ Time-out Period	Set time-out period.
Time-out Period	10 ms

■SM/SD Setting

Item	Setting
⊟ *Latch Setting*	Set the latch of SM/SD device.
Advanced Settings	Do Not Latch
Station Number	Do Not Latch
Message Pattern	Do Not Latch
Time-out Period	Do Not Latch
⊟ FX3 Series Compatibility	Set the SM/SD device compatible with the FX3 series.
SM/SD for Compatibility	Disable

Communication board (CH2)

Navigation Window ⇨ Parameter ⇨ FX5UCPU ⇨ Module Parameter ⇨ Extended Board

Window

The following screen will be displayed if [FX5-232-BD] or [FX5-485-BD] is set for the extended board and [MC Protocol] is set for the communication protocol type. Fixed setting and SM/SD setting are the same as in the case of built-in RS-485 port (CH1).

■Basic Settings

Item	Setting
⊟ *Extended Board*	**Set the extended board type.**
Extended Board	FX5-485-BD
⊟ **Communication Protocol Type**	**Set communication protocol type.**
Communication Protocol Type	MC Protocol
⊟ **Advanced Settings**	**Set detailed setting.**
Data Length	7bit
Parity Bit	Odd
Stop Bit	1bit
Baud Rate	9,600bps
Sum Check Code	Not Added

Communication adapter (CH3/CH4)

When an expansion adapter is used, add expansion adapter to Module Information.

Navigation window ⇨ Parameter ⇨ Module Information ⇨ Right-click ⇨ Add New Module

After adding the expansion adapter, make settings on the screen displayed from the following operation.

Navigation window ⇨ Parameter ⇨ Module Information ⇨ ADP1 to ADP6 (Communication adapter) ⇨ Module Parameter

Window

Each setting screen is the same as in the case of built-in RS-485 port (CH1).

Parameter setting details

Set the following items in the channel that uses MC protocol.

	Items		Setting value	Reference section
Basic Settings	Extended Board*1		When using this function, select [FX5-232-BD] or [FX5-485-BD].	—
	Communication Protocol Type		When using this function, select [MC Protocol].	
	Advanced Settings	Data Length	7bit/8bit	
		Parity Bit	None/Odd/Even	
		Stop Bit	1bit/2bit	
		Baud Rate	300bps/ 600bps/ 1200bps/ 2400bps/ 4800bps /9600bps/ 19200bps/ 38400bps/ 57600bps/ 115200bps	
		Sum Check Code	Added/Not Added	
Fixed Setting	Station Number		0 to 15	—
	Message Pattern		Pattern 1 (X, Y OCT)/ Pattern 1 (X, Y HEX)*2/ Pattern 4 (X, Y OCT)/ Pattern 4 (X, Y HEX)*2/ Pattern 5	
	Time-out Period		1 to 32767 (ms)	
SM/SD Setting	Latch Setting	Station No.	Latch/Do Not Latch	Refer to the following

*1 Only in the case of communication board (CH2).

*2 For supported versions of format 1 (X,Y HEX) and format 4 (X,Y HEX), refer to ☞ Page 257 Added and Enhanced Functions.

The following settings are unnecessary (fixed values).

Items	Descriptions
Start bit	1 bit
Header	Not added
Terminator	Not added
Control mode	—
Control procedure	None

Latch Setting

Set the necessity of the corresponding SD (special register) latch.

Descriptions	Setting range	Compatible devices
Station number settings	Latch/Do Not Latch	SM8740, SM8750, SM8460, SM8770

4.7 MC Protocol Command

Command list

The following commands can be executed in MC protocol.

3C/4C frame

Name	Commands	Sub-command	Contents of processing	Number of points processed in one-time update
Batch reading	0401H	0001H	Reads data in 1-point units from bit devices or word devices.	ASCII: 3584 points BIN: 3584 points
		0000H	• Reads data in 16-point units from bit devices. • Reads data in 1-word unit from word devices.	960 words (15360 points)
		0081H	• Reads data in 1-bit unit from buffer memory of intelligent unit. • Reads data in 1-bit unit from a device indirectly specified in the index register.	ASCII: 3584 points BIN: 3584 points
		0080H	• Reads data in 1-word unit from buffer memory of intelligent unit. • Reads data in 1-word unit from a device indirectly specified in the index register.	960 words (15360 points)
		0083H	• Reads data in 1-bit unit from buffer memory of intelligent unit. • Reads data in 1-bit unit from a device indirectly specified in the index register.	ASCII: 3584 points BIN: 3584 points
		0082H	• Reads data in 1-word unit from buffer memory of intelligent unit. • Reads data in 1-word unit from a device indirectly specified in the index register.	960 words (15360 points)
Batch writing	1401H	0001H	Writes data in 1-bit units to bit devices.	ASCII: 3584 points BIN: 3584 points
		0000H	• Writes data in 16-bit units to bit devices. • Writes data in 1-word units to bit devices.	960 words (15360 points)
		0081H	• Writes data in 1-bit unit to MC protocol compatible devices or buffer memory of intelligent unit. • Indirectly specifies bit devices, word devices and buffer memory in the index register.	ASCII: 3584 points BIN: 3584 points
		0080H	Writes data in 1-word (16-bits) unit to MC protocol compatible devices or buffer memory of intelligent unit.	960 words (15360 points)
		0083H	Writes data in 1-bit unit to MC protocol compatible devices or buffer memory of intelligent unit.	ASCII: 3584 points BIN: 3584 points
		0082H	Writes data in 1-word (16-bits) unit to MC protocol compatible devices or buffer memory of intelligent unit.	960 words (15360 points)
Random reading	0403H	0000H	Reads a word device in 1-word unit or 2-word unit by randomly specifying the device number.	192 points
		0080H	Reads data in 1-word (16-bit) unit from MC protocol compatible devices or buffer memory of intelligent unit.	192 points
		0082H	Reads data in 1-word (16-bit) unit from MC protocol compatible devices or buffer memory of intelligent unit.	192 points

Name	Commands	Sub-command	Contents of processing	Number of points processed in one-time update
Random writing	1402H	0001H	Writes data in 1-bit unit to a bit device by randomly specifying the device number.	188 points
		0000H	• Writes data in 16-bit unit to a bit device by randomly specifying the device number. • Writes data in 1-word unit or 2-word unit to a word device by randomly specifying the device number.	(Number of word access points)×12+(number of double word access points)×14≤1920
		0081H	• Writes data in 1-bit unit to MC protocol compatible devices or buffer memory of intelligent unit. • Indirectly specifies a buffer memory in the index register.	188 points
		0080H	Writes data in 1-word (16-bits) or 2-word unit to MC protocol compatible devices or buffer memory of intelligent unit.	(Number of word access points)×12+(number of double word access points)×14≤1920*1
		0083H	Writes data in 1-bit unit to MC protocol compatible devices or buffer memory of intelligent unit.	188 points
		0082H	Writes data in 1-word (16-bits) unit or 2-word unit to MC protocol compatible devices or buffer memory of intelligent unit.	(Number of word access points)×12+(number of double word access points)×14≤1920*1
Multiple block batch reading	0406H	0000H	Assumes an n point part of a bit device or word device as 1-block and reads data by randomly specifying the multiple blocks. (When specifying bit devices, 16-bit is intended in 1-point.)	960 points
		0080H	Assumes an n point part of a MC protocol compatible devices or buffer memory of intelligent unit as 1-block and reads data by randomly specifying the multiple blocks. (When specifying bit devices, 16-bit is intended in 1-point.)	960 points
		0082H	Assumes an n point part of a MC protocol compatible devices or buffer memory of intelligent unit as 1-block and reads data by randomly specifying the multiple blocks.	960 points
Multiple block batch writing	1406H	0000H	Assumes an n point part of a bit device or word device as 1-block and writes data by randomly specifying the multiple blocks. (When specifying bit devices, 16-bit is intended in 1-point.)	770 points
		0080H	Assumes an n point part of a MC protocol compatible devices or buffer memory of intelligent unit as 1-block and writes data by randomly specifying multiple blocks. (When specifying bit devices, 16-bit is intended in 1-point.)	770 points*1
		0082H	Assumes an n point part of a MC protocol compatible devices or buffer memory of intelligent unit as 1-block and writes data by randomly specifying multiple blocks.	770 points*1
Remote RUN	1001H	0000H	Requests remote RUN to a device.	—
Remote STOP	1002H	0000H	Requests remote STOP to a device.	—
Remote PAUSE	1003H	0000H	Requests remote PAUSE to a device.	—
Remote Latch Clear	1005H	0000H	Requests remote latch clear when a device is in STOP mode.	—
Remote Reset	1006H	0000H	Requests remote reset to cancel error stop mode of a device.	—
CPU model name reading	0101H	0000H	Reads a processor module name code (processor type) of a device.	—
Loop-back test	0619H	0000H	Checks if normal communication is possible.	—
LED OFF, error code initialization	1617H	0000H	Clears all errors in batches and turns OFF LED.	—

*1 With device extension specification, the number of points that can be set become fewer. When using the device extension specification, calculate doubling the number of access points.

Applicable device

The table below shows devices and device number range that can handled in commands used in communication by MC protocol.

Specify devices and device number range that are there in the targeted unit for performing data reading, writing etc.

In 3C/4C frame, in the following "Device Code", specify a device of the access point.

Division	Device		Type	Device Code[*1] (Device specification format: Long)		Device No.		FX5 device available[*2]
				ASCII code	Binary code			
Internal user devices	Input		Bit	X* (X***)	9CH (9C00H)	Specify within the range of device numbers that the unit at the access point bears.	[*3]	○
	Output			Y* (Y***)	9DH (9D00H)		[*3]	○
	Internal relay			M* (M***)	90H (9000H)		Decimal	○
	Latch relay			L* (L***)	92H (9200H)		Decimal	○
	Annunciator			F* (F***)	93H (9300H)		Decimal	○
	Edge relay			V* (V***)	94H (9400H)		Decimal	—
	Link relay			B* (B***)	A0H (A000H)		Hexadecimal	○
	Step relay			S* (S***)	98H (9800H)		Decimal	○
	Data register		Word	D* (D***)	A8H (A800H)		Decimal	○
	Link register			W* (W***)	B4H (B400H)		Hexadecimal	○
	Timer	Contact	Bit	TS (TS**)	C1H (C100H)		Decimal	○
		Coil		TC (TC**)	C0H (C000H)			○
		Present value	Word	TN (TN**)	C2H (C200H)			○
	Long Timer	Contact	Bit	— (LTS*)	51H (5100H)		Decimal	—
		Coil		— (LTC*)	50H (5000H)			—
		Present value	Double word	— (LTN*)	52H (5200H)			—
	Retentive timer	Contact	Bit	SS (STS*)	C7H (C700H)		Decimal	○
		Coil		SC (STC*)	C6H (C600H)			○
		Present value	Word	SN (STN*)	C8H (C800H)			○
	Long Retentive Timer	Contact	Bit	— (LSTS)	59H (5900H)		Decimal	—
		Coil		— (LSTC)	58H (5800H)			—
		Present value	Double word	— (LSTN)	5AH (5A00H)			—
	Counter	Contact	Bit	CS (CS**)	C4H (C400H)		Decimal	○
		Coil		CC (CC**)	C3H (C300H)			○
		Present value	Word	CN (CN**)	C5H (C500H)			○
	Long counter	Contact	Bit	— (LCS*)	55H (5500H)		Decimal	○
		Coil		— (LCC*)	54H (5400H)			○
		Present value	Double word	— (LCN*)	56H (5600H)			○
	Link special relay		Bit	SB (SB**)	A1H (A100H)		Hexadecimal	○
	Link special register		Word	SW (SW**)	B5H (B500H)		Hexadecimal	○
System device	Special relay		Bit	SM (SM**)	91H (9100H)	Specify within the range of device numbers that the unit at the access point bears.	Decimal	○
	Special Register		Word	SD (SD**)	A9H (A900H)		Decimal	○
	Command input		Bit	—	—	—	Hexadecimal	—
	Command output			—	—		Hexadecimal	—
	Function register		Word	—	—		Decimal	—

Division	Device	Type	Device Code*1 (Device specification format: Long)		Device No.		FX5 device available*2
			ASCII code	Binary code			
Index register		16 bit	Z* (Z***)	CCH (CC00H)	Specify within the range of device numbers that the unit at the access point bears.	Decimal	○
		32 bit	LZ (LZ**)	62H (6200H)		Decimal	○
File register		Word	R* (R***)	AFH (AF00H)		Decimal	○
			ZR (ZR**)	B0H (B000H)		Decimal	—
Unit access device*4	Link register	Word	W* (W***)	B4H (B400H)		Hexadecimal	—
	Link special register		SW (SW**)	B5H (B500H)		Hexadecimal	—
	Module access device		G* (G***)	ABH (AB00H)		Decimal	○

*1 [ASCII code]
When a device code is less than the specified number of characters, add "*" (ASCII code: 2AH), or <space> (ASCII code: 20H) at the end of the device code.
[Binary code]
When a device code is less than the specified size, add "00H" at the end of the device code.

*2 ○: FX5 device
—: No FX5 device

*3 It depends on the message format. See below.
Format 1 (X,Y OCT), format 4 (X,Y OCT): octal
Format 1 (X,Y HEX), format 4 (X,Y HEX), format 5: hexadecimal

*4 It is necessary to make "Device memory extension specification" of the sub-command to ON (1).

4.8 Troubleshooting

This section explains troubleshooting.

Checking communication status based on LED indication

Check the status of the LED indications of [RD] and [SD] on the CPU module or the communication board/communication adapter.

LED status		Operation status
RD	SD	
On	On	The data is being sent or received.
On	Off	The data is received, but is not sent.
Off	On	The data is being sent, but is not received.
Off	Off	The data is not being sent or received.

When normally sending or receiving by MC protocol, both LEDs start flashing brightly.
If they do not flash, check the wiring and the communication settings.

Checking installation and wiring

- Connection status

The communication cannot be operated if the PLC and the communication board/communication adapter are not connected correctly.
For the connection procedure, refer to the following.
📖MELSEC iQ-F FX5U User's Manual (Hardware)
📖MELSEC iQ-F FX5UC User's Manual (Hardware)

- Wiring

Verify that all communication equipment is correctly wired. (☞ Page 74 Wiring)

Checking sequence program

An error may occur when a serial port using MC protocol is specified in a command that will be used in inverter communication, non-protocol communication or predefined protocol support function. (☞ Page 236 Combined Use of Serial Communication)

Checking the communication setting

Verify that protocol type is "MC Protocol". When the protocol type is not "MC Protocol", communication will not function correctly. (☞ Page 79 Communication Setting)
After changing any parameters, make sure to turn OFF→ON the PLC power, or reset.

Checking error codes

3C/4C frame

■Error codes when NAK is sent

The table below shows error codes (hexadecimal) and contents of errors when NAK is sent in communication between the counterpart equipment and a CPU module.
When two or more errors occur at the same time, priority is given to the error code with the smallest number, and the error code with the smallest number is sent. Further, in case of an occurrence of the following errors, initialize the entire transmission sequence.

Error code (hexadecimal)	Error item	Description of error	Troubleshooting
4000H to 4FFFH	—	An error detected by the CPU unit. (An error occurring outside communication by MC protocol)	Refer to following manual and take measures. 📖MELSEC iQ-F FX5U User's Manual (Hardware) 📖MELSEC iQ-F FX5UC User's Manual (Hardware)
7143H	Device number error	Head device address is outside the range.	Check the sent message of the counterpart equipment, modify it if necessary, and then execute communication again.
7164H	Request contents error	There is an error in the request contents or the device specification method.	Check the sent message/request contents of the counterpart equipment, modify it if necessary, and then execute communication again.
7167H	Disabled in RUN mode	Write command is specified when write not possible in RUN mode is set.	Change the settings to make writing in RUN mode possible, and then execute communication again.
7168H		A command that cannot be executed in RUN mode is specified.	STOP the CPU and then execute communication again.
7E40H	Command error	A non-existing command or sub-command is specified.	Check the sent message of the counterpart equipment, modify it if necessary, and then execute communication again.
7E41H	Data length error	The number of points that can be exchanged at the time of random reading/writing are exceeded and specified.	Check the sent message of the counterpart equipment, modify it if necessary, and then execute communication again.
7E42H	Data count error	The number of points requested are exceeding the range for the command.	Check the sent message of the counterpart equipment, modify it if necessary, and then execute communication again.
7E43H	Device error	• Non-existing device is specified. • A device that cannot be specified in the pertinent command is specified.	Check the sent message of the counterpart equipment, modify it if necessary, and then execute communication again.
7F21H	Receiving header part error	• There is a specification error in the command (frame) part. • An ASCII code that cannot be converted to binary code is received.	Check the sent message of the counterpart equipment, modify it if necessary, and then execute communication again.
7F22H	Command error	There is an error in the remote password length.	Check the sent message of the counterpart equipment, modify it if necessary, and then execute communication again.
7F23H	MC protocol message error	There is no data (ETX, CR-LF etc.) at the end of character part or there is an error in the specification.	Check the sent message of the counterpart equipment, modify it if necessary, and then execute communication again.

Error code (hexadecimal)	Error item	Description of error	Troubleshooting
7F24H	Sum check error	• The received sum check code does not match with the calculated sum check code. • The received horizontal parity code does not match with the calculated horizontal parity code. • The received error check code does not match with the calculated error check code.	• Check the sum check code of the counterpart equipment. • Check the horizontal parity code of the counterpart equipment. • Check CRC-16 of the counterpart equipment.
7F26H	Command error	At the time of registering a remote password, a different command is received before unlock process.	After the unlock process ends normally, execute communication.
7F40H	Timeout error	Time is up for the no reception monitor time (timer 0).	• Verify that there is no data omission in the reception error. • Verify that the reception is not stopped due to DTR control etc.
7F67H	Overrun error	The following data is received before FX5 PLC completed receiving process.	Reduce the communication speed and then execute communication again.
7F68H	Framing error	• A disturbance occurred in the line due to power supply ON/OFF of the counterpart station. • There is noise on the line. • At the time of multi drop connection, the data is sent simultaneously from multiple equipments.	• Take counter measures for noise. • At the time of multi drop connection, have an interlock so that the data is not sent simultaneously from multiple equipments.
7F69H	Parity error	• The parity bit settings do not match. • A disturbance occurred in the line due to power supply ON/OFF of the counterpart station. • There is noise on the line. • At the time of multi drop connection, the data is sent simultaneously from multiple equipments.	• Match the settings of FX5 PLC and counterpart equipment. • Take counter measures for noise. • At the time of multi drop connection, have an interlock so that the data is not sent simultaneously from multiple equipments.
7FE6H	Remote password error	Remote password does not match.	Check the remote password error, and then execute communication again.

■Error codes in CPU

When an error is included in a message from the counterpart equipment in the communication between counterpart equipment and CPU unit, a serial communication error occurs in the CPU unit.

• Error flags

If a communication error occurs in MC protocol, the serial communication error flag turns ON.

Verify that the device specified in the table below is ON.

CH1	CH2	CH3	CH4	Name	Description
SM8500	SM8510	SM8520	SM8530	Serial communication error	Turns ON when an error occurs in serial communication.

• Error codes

When the serial communication error turns ON, the error code is stored in the device specified in the table below.

CH1	CH2	CH3	CH4	Name	Description
SD8500	SD8510	SD8520	SD8530	Serial communication error code	Stores the error code when the serial communication error occurs.

The following table shows the error code (hexadecimal) stored in each device.

Error codes (hexadecimal)	Description
0000H	No error detected
7F40H	Monitoring time out
7F67H	Overrun error
7F68H	Framing error
7F69H	Parity error

When an error code above is stored, check the following items:

Name	Description of error	Troubleshooting
Parity, overrun or framing error	The transfer data is abnormal.	Check the transfer specifications set using parameters, and execute communication again.
Monitoring time out	The received message was insufficient. Because normal message was not received within the time-out time setting, the transfer sequence was initialized.	The message is insufficient. Modify the transfer program in the counterpart equipment to execute the communication again.

Point

The serial communication error flags and serial communication error codes are not cleared even when communication is restored.
They are cleared when turning OFF→ON the PLC power or resetting the system.

4

Operation error

■Error flags

The operation error flag turns ON when an operation error occurs in the communication settings.
Verify that the device specified in the table below is ON.

FX5 Series dedicated				Name	Description
CH1	CH2	CH3	CH4		
SM0				Latest self-diagnostic error (Including the annunciator ON)	Turns ON when an operation error occurs.
SM1				Latest self-diagnostic error (Not including the annunciator ON)	
SM56, SM8067				Operation error	

■Error codes

When the operation error flag turns ON, the error code (hexadecimal) is stored in the operation error code (SD0/SD8067).
The error codes stored in the device are shown as follows.

Error codes (hexadecimal)	Name	Description of error	Error handling
2222H	Parameter error	The parameter setting value exceeded the available range.	Correct the setting value of the parameter and write the project again.

4.9 Related Devices

List of related devices

Special relay

Device No.				Name	Description	R/W
CH1	CH2	CH3	CH4			
SM8500	SM8510	SM8520	SM8530	Serial communication error	Turns ON when an error occurs in serial communication.	R
SM8740	SM8750	SM8760	SM8770	Station number setting latch setting valid flag	Turns ON when the SD latch setting of station number setting is valid. ON: SD latch setting of station number setting is valid OFF: SD latch setting of station number setting is invalid	R

R: Read only

Special register

Device No.				Name	Description	R/W
CH1	CH2	CH3	CH4			
SD8500	SD8510	SD8520	SD8530	Serial communication error code	Stores the error code when a serial communication error occurs.	R
SD8502	SD8512	SD8522	SD8532	Serial communication settings	Stores the setting of the communication parameter.	R
SD8740	SD8750	SD8760	SD8770	Station number settings*1	Sets the station number of a PLC.	*2
SD8741	SD8751	SD8761	SD8771	Message system	Stores the setting of the message system.	R
SD8742	SD8752	SD8762	SD8772	Time-out time setting	These devices set the evaluation time for error when receiving of data from the counterpart equipment is interrupted.	R
SD8503	SD8513	SD8523	SD8533	Serial communication operation mode	Stores the communication type being used.	R

R: Read only

*1 When SD latch setting is set to “latch”, device value can be changed in the program or an engineering tool, and by turning power supply ON→OFF or by reset, the corresponding function can be operated with the changed value.

*2 With latch settings: Read/write
No latch settings: Read only

Details of related devices

The devices described below are used in MC protocol.

Serial communication error

Turns ON when an error occurs in serial communication. These flags are for check of the serial communication error.

CH1	CH2	CH3	CH4	Description	R/W
SM8500	SM8510	SM8520	SM8530	Turns ON when an error occurs in serial communication. Devices do not go OFF even when normal communication is restored.	R

R: Read only

After the devices above turns ON, the error code is stored in the compatible devices below.

CH1	CH2	CH3	CH4	Name	Description
SD8500	SD8510	SD8520	SD8530	Serial communication error code	When a serial communication error occurs, the error code is stored.

Precautions

Do not turn ON or OFF with program or engineering tool.

Serial communication error does not turn OFF even if the communication comes back to normal.

The devices turn OFF when power is turned OFF→ON, reset or SM50 (Error Detection Reset Completion) is turned ON.

Station number setting latch setting valid flag

When latch for the station number setting set in the parameter is “latch”, these flags turn ON when power supply ON→OFF or when system is reset.
In that case, the station number set in SD8740, SD8750, SD8760, SD8770 turns valid.
When latch not required for the station number setting set in the parameter is “no latch”, these flags turn OFF when power supply ON→OFF or when system is reset.
In that case, a station number set in the parameter turns valid.
In addition, this device holds its status even when the power is turned OFF→ON or reset.

CH1	CH2	CH3	CH4	Description	R/W
SM8740	SM8750	SM8760	SM8770	Turned ON when with SD latch setting of station number setting is valid.	R

R: Read only

Precautions

Do not turn ON or OFF with program or engineering tool.

Serial communication error code

Stores the error code for serial communication (☞ Page 86).

CH1	CH2	CH3	CH4	Description	R/W
SD8500	SD8510	SD8520	SD8530	When a serial communication error occurs, the error code is stored.	R

R: Read only

Precautions

Do not change the value with program or engineering tool.
Serial communication errors are not cleared even after communication has recovered its normal status.
Cleared the devices when power is turned OFF→ON, reset or SM50 (Error Detection Reset Completion) is turned ON.

Serial communication settings

Stores the set communication parameter in the communication settings when turning OFF→ON the PLC power or resetting the system. (☞ Page 79 Communication Setting)

CH1	CH2	CH3	CH4	Description	R/W
SD8502	SD8512	SD8522	SD8532	Stores the setting of the communication parameter.	R

R: Read only

The descriptions of the communication parameters are as follows.

Bit No.	Name	Description	
		0 (bit = OFF)	1 (bit = ON)
b0	Data length	7 bits	8 bits
b1 b2	Parity bit	b2, b1 (0, 0): Not provided (0, 1): Odd (1, 1): Even	
b3	Stop bit	1 bit	2 bits

Bit No.	Name	Description	
		0 (bit = OFF)	1 (bit = ON)
b4 b5 b6 b7	Baud rate	b7, b6, b5, b4 (0, 0, 1, 1): 300 bps (0,1,0,0): 600bps (0, 1, 0, 1): 1200 bps (0,1,1,0): 2400bps (0,1,1,1): 4800bps (1,0,0,0): 9600bps (1,0,0,1): 19200bps (1,0,1,0): 38400bps (1,0,1,1): 57600bps (1,1,0,0): 76800bps (1,1,0,1): 115200bps	
b13	Sum check	Not added	Added

Precautions

Do not change the value with program or engineering tool.

Station number settings

When SD latch setting is set to “no latch”, a station number of a local station that is set in the engineering tool and used in MC protocol (station numbers 0~15(00H to 0FH)) is stored when the power supply is turned OFF→ON or reset.
When SD latch setting is set to “latch”, the contents of station number settings can be changed by program or engineering tool, and by turning power supply ON→OFF or by reset, it can be operated with the station number stored in the station number settings.

CH1	CH2	CH3	CH4	Description	R/W
SD8740	SD8750	SD8760	SD8770	Stores the station number of a PLC.	*1

*1 With latch settings: Read/write
No latch settings: Read only

Precautions

Do not change the value with program or engineering tool.

Message system

Stores the settings of the message system (format1, 4, 5) that is set in the parameter.

CH1	CH2	CH3	CH4	Description	R/W
SD8741	SD8751	SD8761	SD8771	0: Format 1 (X, Y OCT) 3: Format 4 (X, Y OCT) 4: Format 5 5: Format 1 (X, Y HEX)*1 6: Format 4 (X, Y HEX)*1	R

R: Read only

*1 For supported versions of format 1 (X, Y HEX) and format 4 (X, Y HEX), refer to ☞ Page 257 Added and Enhanced Functions.

Precautions

Do not change the value with program or engineering tool.

Time out judge time

Stores the judgment time until the error when a data reception is stopped from the counterpart equipment, set in the parameter when the power supply is turned OFF→ON or reset.

CH1	CH2	CH3	CH4	Description	R/W
SD8742	SD8752	SD8762	SD8772	0 to 32767 (ms) When "0" or negative value is set for the setting value, the time-out time is set to default value (refer to the following).	R

R: Read only

■Default value of the time-out time

Baud rate (bps)	Default value (ms)		Baud rate (bps)	Default value (ms)
300	50		9600	10
600	30		19200	10
1200	20		38400	10
2400	10		57600	10
4800	10		115200	10

Precautions

Set a longer time-out time to the parameter than the required time to receive one character for the baud rate being used.
Do not change the value with program or engineering tool.

Serial communication operation mode

Stores the communication function code that the serial communication is being used.

CH1	CH2	CH3	CH4	Description	R/W
SD8503	SD8513	SD8523	SD8533	0: MELSOFT Connection or MC protocol 3: N:N Network Communication 5: Non-protocol Communication 6: Parallel Link Communication 7: Inverter Communication 9: MODBUS RTU Communication 12: Predefined protocol support Other than above: Not used	R

R: Read only

Precautions

Do not change the value with program or engineering tool.

5 INVERTER COMMUNICATION

This chapter explains inverter communication.

5.1 Function Outline

Inverter communication function allows connection between an FX5 PLC and up to 16 inverters through RS-485 communication, and monitors operations of inverters, gives various commands to inverters and reads and writes inverter parameters.

- Mitsubishi general-purpose inverters FREQROL-F800/A800/F700PJ/F700P/A700/E700/E700EX (sensor less servo) / D700/V500 Series can be linked.
- Inverter operations can be monitored, various commands can be given, and parameters can be read or written.
- The overall distance is 1200 m maximum. (Applies only when configured with FX5-485ADP)

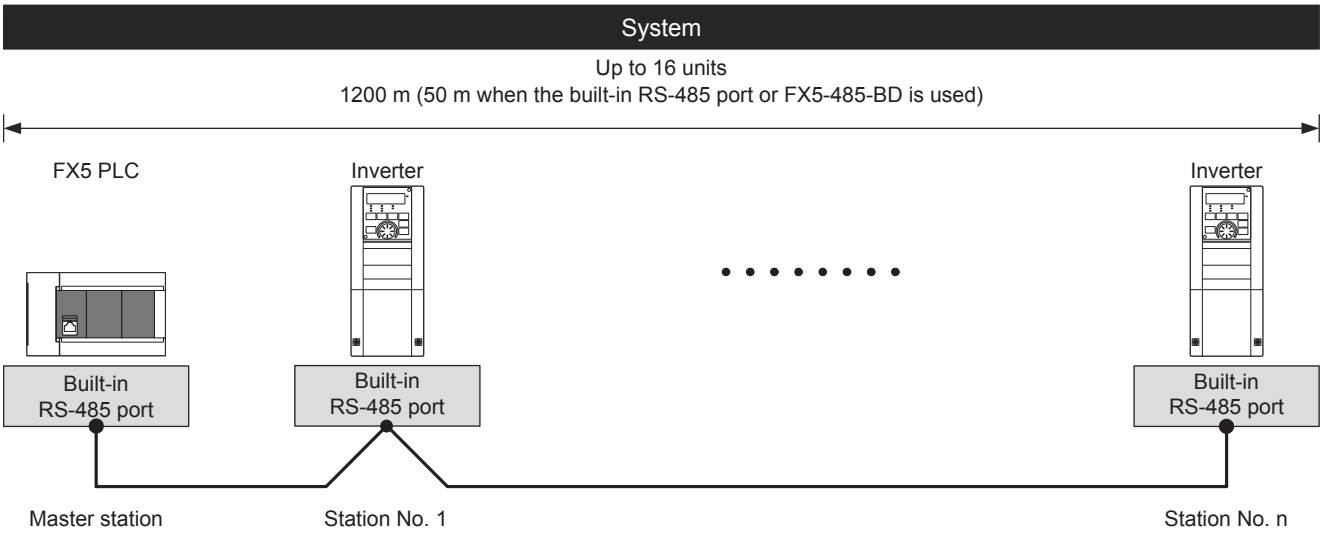

5.2 Procedure before Operation

The flow chart below shows the Inverter Communication setting and sequence programs creation procedure until data link:

1. Check communication specifications

For applicable inverter, operation commands and parameters, and execution time of inverter communication, refer to Refer to ☞ Page 93 Specifications.

2. System configuration and selection

For system configuration, and select communication equipment, refer to Refer to ☞ Page 93 System Configuration.

3. Wiring

For selection of cables and connection equipment, and wiring example, refer to Refer to ☞ Page 100 Wiring.

4. Communication settings

For communication settings of inverter, refer to ☞ Page 113 Inverter Communication Settings.

For communication settings of communication device, refer to ☞ Page 118 PLC Communication settings.

5. Program creation*1

For detailed explanation of related devices, and basic program, refer to Refer to ☞ Page 120 Programming.

*1 For details on operating procedure of GX Works3, refer to the manual below.
📖GX Works3 Operating Manual

5.3 System Configuration

This section outlines the system configuration required to use inverter communication.

You can use the inverter communication function in the CPU module using the built-in RS-485 port, communication board, and communication adapter.

Allotment of serial ports is set to the following fixed numbers, regardless of system configuration.

■FX5U CPU module

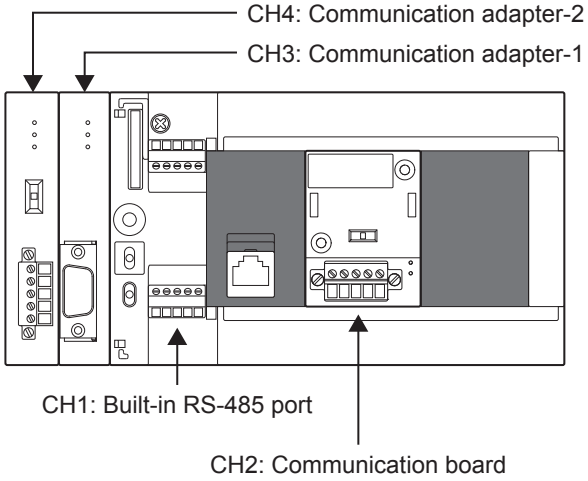

■FX5UC CPU module

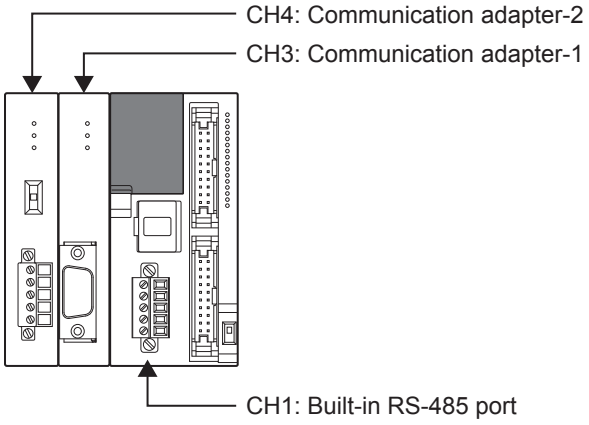

Communication device

		Serial port	Important points in selection	Overall distance
Built-in RS-485 port		CH1	Since it is built-into the CPU module, there is no need to add equipment.	50 m or less
Communication board	FX5-485-BD	CH2	Mounted on top of the CPU module, there is no change in the installation space requirements.	50 m or less
Communication adapter	FX5-485ADP	CH3, CH4*1	Mount the communication adapter to the left of the CPU module.	1200 m or less

*1 Assigned to CH3 or CH4 in order of proximity to CPU module.

5.4 Specifications

This section describes the communication specifications and performance of the inverter communication function.

Communication specifications

Items		Specifications	Remarks
Number of connectable units		Maximum of 16	—
Transmission standard		RS-485 standard	—
Maximum overall distance		When FX5-485ADP is used: 1200 m or less When using built-in RS-485 port or FX5-485-BD: 50 m or less	—
Protocol type		Inverter computer link	—
Control procedure		Asynchronous system	—
Communication method		Half-duplex, bi-directional communication	—
Baud rate		4800/9600/19200/38400/57600/115200 bps	Only FREQROL-F800/A800 supports 57600 bps or more
Character format	—	ASCII	—
	Start bit	1 bit	—
	Data length	7 bits/8 bits	—
	Parity bit	None, odd or even	—
	Stop bit	1 bit/2 bits	—

Applicable inverter

Series	Connection destination
FREQROL-F800 Series	Built-in RS-485 terminal
FREQROL-A800 Series	Built-in RS-485 terminal
FREQROL-F700PJ Series	Built-in PU connector
FREQROL-F700P Series	Built-in RS-485 terminal
FREQROL-A700 Series	Built-in RS-485 terminal
FREQROL-E700 Series	Built-in PU connector, FR-E7TR (optional)
FREQROL-E700EX Series	Built-in PU connector
FREQROL-D700 Series	Built-in PU connector
FREQROL-V500 Series	Built-in PU connector, FR-A5NR (optional)

Inverter instruction codes and parameters

The tables below show the inverter instruction codes and the parameters that can be communicated.

Inverter Operation monitoring

The table below shows instruction codes for reading the inverter which can be specified by IVCK instruction (☞ Page 126) operand (s2) and their contents. Any instruction codes not shown in the table below may cause communication errors. Use the instruction codes shown below only.
For the instruction codes, refer to the pages explaining computer link in detail in each inverter manual.

Inverter Instruction code (hexadecimal)	Read contents	Applicable inverter								
		F800	A800	F700PJ	F700P	A700	E700	E700EX	D700	V500
H7B	Operation mode	○	○	○	○	○	○	○	○	○
H6F	Output frequency/speed	○	○	○	○	○	○	○	○	○*1
H70	Output current	○	○	○	○	○	○	○	○	○
H71	Output voltage	○	○	○	○	○	○	○	○	○
H72	Special monitor	○	○	○	○	○	○	○	○	○
H73	Special monitor selection No.	○	○	○	○	○	○	○	○	○
H74	Error contents	○	○	○	○	○	○	○	○	○
H75										
H76										
H77										
H79	Inverter status monitor (expansion)	○	○	○	○	○	○	○	○	—
H7A	Inverter status monitor	○	○	○	○	○	○	○	○	○
H6D	Set frequency read (RAM)	○	○	○	○	○	○	○	○	○*1
H6E	Set frequency read (EEPROM)	○	○	○	○	○	○	○	○	○*1
H7F	Link parameter expansion setting	These codes cannot be specified in (s2) in IVCK instruction. They are automatically processed when a "second parameter specification code" is specified in IVRD instruction.								
H6C	Second parameter switching									

*1 Please set "0" to instruction code HFF (Link parameter expansion setting) just before the IVCK instruction when reading frequency. When "0" is not set, reading of the frequency may not be executed normally.

Inverter Operation control

The table below shows instruction codes for writing to the inverter which can be specified by IVDR instruction (☞ Page 128) operand (s2) and their contents.

For the instruction codes, refer to the pages explaining computer link in detail in each inverter manual.

Inverter Instruction code (hexadecimal)	Write contents	Applicable inverter								
		F800	A800	F700PJ	F700P	A700	E700	E700EX	D700	V500
HFB	Operation mode	○	○	○	○	○	○	○	○	○
HF3	Special monitor selection number	○	○	○	○	○	○	○	○	○
HF9	Run command (expansion)	○	○	○	○	○	○	○	○	—
HFA	Run command	○	○	○	○	○	○	○	○	○
HED	Set frequency write (RAM)	○	○	○	○	○	○	○	○	○*3
HEE	Set frequency write (EEPROM)	○	○	○	○	○	○	○	○	○*3
HFD*1	Inverter reset*2	○	○	○	○	○	○	○	○	○
HF4	Error contents batch clear	○	○	○	○	○	○	○	○	○
HFC	Parameter clear All parameter clear	○	○	○	○	○	○	○	○	○
HFF	Link parameter expansion setting	○	○	○	○	○	○	○	○	○

*1 The instruction code "HFD (inverter reset)" does not request a response from the inverter. Accordingly, even if inverter reset is executed in a station number to which an inverter is not connected, error does not occur. It takes about 2.2 seconds to complete execution of inverter reset.

*2 When resetting the inverter, please specify H9696 as the operand (s3) of the IVDR instruction.
Do not use H9966.

*3 Please set "0" to instruction code HFF (Link parameter expansion setting) just before the IVDR instruction when writing frequency. When "0" is not set, writing of the frequency may not be executed normally.

Parameters

For inverter parameters which can be changed (read/write), refer to the manual for each particular inverter.

Time required for inverter communication instructions

Outline

The period of time after one inverter communication instruction is driven until communication with the inverter is completed (SM8029 turns ON) is considered as the required time for the inverter communication instruction as shown.

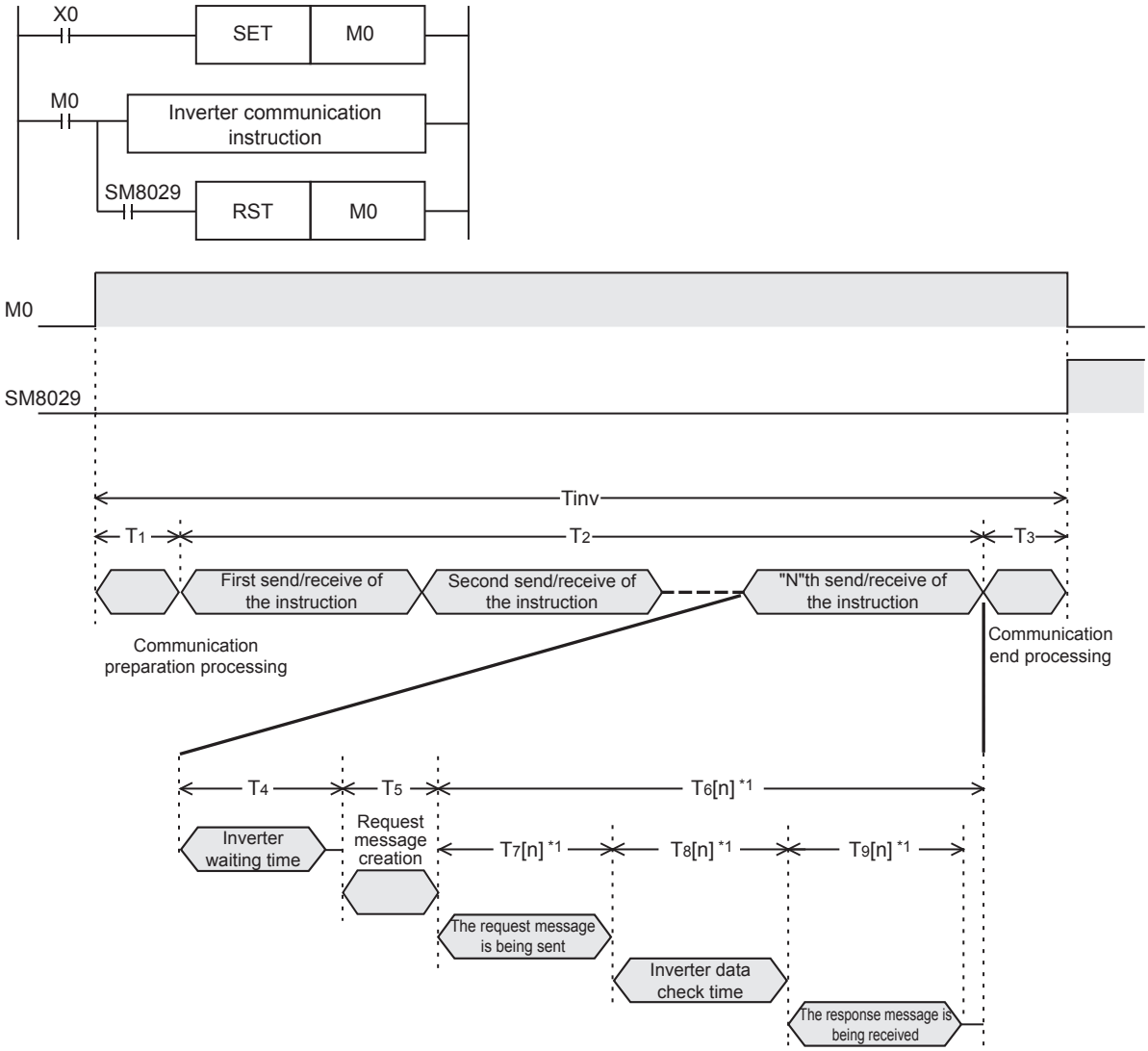

*1 The time required for the "n"th time send/receive of the instruction.

Some inverter communication instructions execute several send/receives. The following table shows the number of send/receives in each instruction.

Inverter communication instruction		Number of send/receives per instruction
IVCK		1
IVDR		1
IVRD	Change of the 2nd parameter is unnecessary.	2
	Change of the 2nd parameter is necessary.*2	3
IVWR	Change of the 2nd parameter is unnecessary.	2
	Change of the 2nd parameter is necessary.*2	3
IVBWR	Number of times of communication (s2)	(s2) × 2 + Number of parameters requiring change of the 2nd parameter*2
IVMC		1

*2 For parameters requiring change of the 2nd parameter, refer to ☞ Page 140 Second parameter specification code.

Calculation method

The required time "Tinv" for inverter communication instruction in units of "ms" is calculated as follows.

"INT(n)" in the calculation formula indicates an integer obtained by truncating decimal places of "n".

■Length of 1 character

In inverter communication, the communication setting is as shown in the following table.

The length of 1 character is as shown in the following expression.

Length of 1 character = Start bit + Data length + Parity bit + Stop bit = 10 [bit]

Name	Setting value	No. of bits
Start bit	—	1
Data length	7	7
Parity bit	Even	1
Stop bit	1	1
Total		10

■Time required for inverter communication instructions

The time required for inverter communication instructions is calculated based on the following expression.

$$T_{inv} = T_1 + T_2 + T_3$$

$$T_1 = \mathrm{INT}\left(\frac{1}{\text{Scan time}} + 1\right) \times \text{Scan time [ms]}^{*1}$$

$$T_2 = \{ n \times (T_4 + T_5) \} + \underline{\Sigma T_6[n]} \text{ [ms]} \qquad n\text{: Number of send/receives}$$

$$\Sigma T_6[n] = T_6[1] + T_6[2] + T_6[3] + \cdots$$

$$T_3 = 1 \text{ [ms]}$$

*1 Time required for one instructions.

T_4, T_5 and $T_6[n]$ are calculated as given in the following table.

Communication time	Calculation method
T_4	$= \left(\mathrm{INT}\left(\frac{1}{\text{Scan time}} + 1\right) \times \text{Scan time}\right) + \left(\mathrm{INT}\left(\frac{11}{\text{Scan time}} + 1\right) \times \text{Scan time}\right)$
T_5	$= \mathrm{INT}\left(\frac{1}{\text{Scan time}} + 1\right) \times \text{Scan time}$
$T_6[n]$	• For Scan time $< T_7[n]+T_8[n]+T_9[n]$ $= \left(\mathrm{INT}\left(\frac{T_7[n] + T_8[n] + T_9[n]}{\text{Scan time}}\right) + 1\right) \times \text{Scan time} + \left(\mathrm{INT}\left(\frac{1}{\text{Scan time}} + 1\right) \times \text{Scan time}\right)$
	• For Scan time $\geq T_7[n]+T_8[n]+T_9[n]$ $= \left(\mathrm{INT}\left(\frac{T_7[n] + T_8[n] + T_9[n]}{\text{Scan time}}\right) + 2\right) \times \text{Scan time} + \left(\mathrm{INT}\left(\frac{1}{\text{Scan time}} + 1\right) \times \text{Scan time}\right)$
$T_7[n]+T_9[n]$	$= \left\{\left(\frac{1}{\text{Communication speed [bps]}}\right) \times (\text{No. of characters sent/received}^{*2} \times \text{1-character length})\right\} \times 1000$
$T_8[n]$	= Data check time in inverters*3

*2 Refer to ☞ Page 98 for the number of sent/received characters.

*3 Refer to ☞ Page 98 for the data check time of inverters.

■Number of sent/received characters

Inverter communication instruction	Parameter/ instruction code	First			Second			Third		
		Send	Receive	Total	Send	Receive	Total	Send	Receive	Total
IVCK	H73, H7A, H7F, H6C	9	9	18	—	—	—	—	—	—
	Other than above	9	11	20	—	—	—	—	—	—
IVDR	HF3, HFA, HFF	11	4	15	—	—	—	—	—	—
	HFD	13	0*2	13	—	—	—	—	—	—
	Other than above	13	4	17	—	—	—	—	—	—
IVRD	Change of the 2nd parameter is unnecessary.	11	4	15	9	11	20	—	—	—
	Change of the 2nd parameter is necessary.	11	4	15	11	4	15	9	11	20
IVWR	Change of the 2nd parameter is unnecessary.	11	4	15	13	4	17	—	—	—
	Change of the 2nd parameter is necessary.	11	4	15	11	4	15	13	4	17
IVBWR*1	Change of the 2nd parameter is unnecessary.	11	4	15	13	4	17	—	—	—
	Change of the 2nd parameter is necessary.	11	4	15	11	4	15	13	4	17
IVMC	—	19	19	38	—	—	—	—	—	—

*1 Indicates the number of sent/received characters required to write 1 parameter. The IVBWR instruction executes parameter writing repeatedly for the number of times of communication (s2).

*2 There is no response from the inverter because resetting is not complete. The PLC waits for 2.2 s until reset of the inverter is completed, and then completes execution of the inverter communication instruction.

■Data check time of inverters

Make sure to refer to the manual of the inverter used, and confirm the data check time corresponding to the communication command used.

Item	Data check time
Various monitors, operation command, set frequency (RAM)	<12 ms
Parameters read/write, set frequency (EEPROM)	<30 ms
Parameter all clear/all clear	<5 s
Reset instruction	No response (The PLC waits for 2.2 s until reset of the inverter is completed, and then completes execution of the inverter communication instruction.)

The IVWR, IVRD and IVBWR instructions automatically change expansion parameters and the 2nd parameter.
The data check time for the last (2nd or 3rd) send/receive in the IVWR and IVRD instructions and the data check time for the last send/receive of each parameter writing in the IVBWR instruction corresponds to parameter reading/writing (<30 ms).
The data check time for sending and receiving other than the above (such as expansion parameter change and 2nd parameter change) corresponds to various monitors (<12 ms).

Calculation example

This is a calculation example for the following communication settings and scan time when communicating with an inverter.

Communication speed = 19200[bps]

Length of 1 character = 10[bit]

Scan time = 10[ms]

■Calculation example 1

Calculation of required time when Pr. 3 is read by the IVRD instruction

$Tinv=T_1+T_2+T_3=181$[ms]

$T_1=10$[ms], $T_3=1$[ms]

Calculate "T_2" as follows because Pr.3 does not require change of the 2nd parameter.

$$T_2 = \underbrace{2}_{\text{Number of send/receives}} \times (T_4 + T_5) + \underbrace{T_6[1]}_{\text{The first send/receive}} + \underbrace{T_6[2]}_{\text{The second send/receive}} = 2 \times (30 + 10) + 30 + 60 = 170 \text{ [ms]}$$

$$T_4 = \left(\mathrm{INT} \left(\frac{1}{10} + 1 \right) \times 10 \right) + \left(\mathrm{INT} \left(\frac{11}{10} + 1 \right) \times 10 \right) = 30 \text{ [ms]}$$

$$T_5 = \mathrm{INT} \left(\frac{1}{10} + 1 \right) \times 10 = 10 \text{ [ms]}$$

$$T_6[1] = \left(\mathrm{INT} \left(\frac{T_7[1]+T_8[1]+T_9[1]}{10} \right) + 1 \right) \times 10 + \left(\mathrm{INT} \left(\frac{1}{10} + 1 \right) \times 10 \right) = \left(\mathrm{INT} \left(\frac{19.8}{10} + 1 \right) \times 10 \right) + 10 = 30 \text{ [ms]}$$

$$T_7[1] + T_8[1] + T_9[1] = 7.8 + 12 = 19.8 \text{ [ms]}$$

$$T_7[1] + T_9[1] = \left(\left(\frac{1}{19200} \right) \times (11+4) \times 10 \right) \times 1000 = 7.8 \text{ [ms]}$$

$$T_8[1] = 12 \text{ [ms]}$$

$$T_6[2] = \left(\mathrm{INT} \left(\frac{T_7[2]+T_8[2]+T_9[2]}{10} \right) + 1 \right) \times 10 + \left(\mathrm{INT} \left(\frac{1}{10} + 1 \right) \times 10 \right) = \left(\mathrm{INT} \left(\frac{40.4}{10} + 1 \right) \times 10 \right) + 10 = 60 \text{ [ms]}$$

$$T_7[2] + T_8[2] + T_9[2] = 10.4 + 30 = 40.4 \text{ [ms]}$$

$$T_7[2] + T_9[2] = \left(\left(\frac{1}{19200} \right) \times (9+11) \times 10 \right) \times 1000 = 10.4 \text{ [ms]}$$

$$T_8[2] = 30 \text{ [ms]}$$

$$Tinv = T_1 + T_2 + T_3 = 10 + 170 + 1 = 181 \text{ [ms]}$$

■Calculation example 2

Calculation of required time when Pr.902 is read by the IVRD instruction

$Tinv=T_1+T_2+T_3=251$[ms]

$T_1=10$[ms], $T_3=1$[ms]

Calculate "T_2" as follows because Pr.902 does not require change of the 2nd parameter.

$$T_2 = \underbrace{3}_{\text{Number of send/receives}} \times (T_4+T_5) + \underbrace{T_6[1]}_{\text{The first send/receive}} + \underbrace{T_6[2]}_{\text{The second send/receive}} + \underbrace{T_6[3]}_{\text{The third send/receive}} = 3 \times (30+10) + 30 + 30 + 60 = 240 \text{ [ms]}$$

$$T_4 = \left(\mathrm{INT} \left(\frac{1}{10} + 1 \right) \times 10 \right) + \left(\mathrm{INT} \left(\frac{11}{10} + 1 \right) \times 10 \right) = 30 \text{ [ms]}$$

$$T_5 = \mathrm{INT} \left(\frac{1}{10} + 1 \right) \times 10 = 10 \text{ [ms]}$$

$$T_6[1] = \left(\mathrm{INT} \left(\frac{T_7[1]+T_8[1]+T_9[1]}{10} \right) + 1 \right) \times 10 + \left(\mathrm{INT} \left(\frac{1}{10} + 1 \right) \times 10 \right) = \left(\mathrm{INT} \left(\frac{19.8}{10} + 1 \right) \times 10 \right) + 10 = 30 \text{ [ms]}$$

$$T_7[1] + T_8[1] + T_9[1] = 7.8 + 12 = 19.8 \text{ [ms]}$$

$$T_7[1] + T_9[1] = \left(\left(\frac{1}{19200} \right) \times (11+4) \times 10 \right) \times 1000 = 7.8 \text{ [ms]}$$

$$T_8[1] = 12 \text{ [ms]}$$

$$T_6[2] = \left(\mathrm{INT} \left(\frac{T_7[2]+T_8[2]+T_9[2]}{10} \right) + 1 \right) \times 10 + \left(\mathrm{INT} \left(\frac{1}{10} + 1 \right) \times 10 \right) = \left(\mathrm{INT} \left(\frac{19.8}{10} + 1 \right) \times 10 \right) + 10 = 30 \text{ [ms]}$$

$$T_7[2] + T_8[2] + T_9[2] = 7.8 + 12 = 19.8 \text{ [ms]}$$

$$T_7[2] + T_9[2] = \left(\left(\frac{1}{19200} \right) \times (11+4) \times 10 \right) \times 1000 = 7.8 \text{ [ms]}$$

$$T_8[2] = 12 \text{ [ms]}$$

$$T_6[3] = \left(\mathrm{INT} \left(\frac{T_7[3]+T_8[3]+T_9[3]}{10} \right) + 1 \right) \times 10 + \left(\mathrm{INT} \left(\frac{1}{10} + 1 \right) \times 10 \right) = \left(\mathrm{INT} \left(\frac{40.4}{10} + 1 \right) \times 10 + 10 = 60 \text{ [ms]}$$

$$T_7[3] + T_8[3] + T_9[3] = 10.4 + 30 = 40.4 \text{ [ms]}$$

$$T_7[3] + T_9[3] = \left(\left(\frac{1}{19200} \right) \times (9+11) \times 10 \right) \times 1000 = 10.4 \text{ [ms]}$$

$$T_8[3] = 30 \text{[ms]}$$

$$Tinv = T_1 + T_2 + T_3 = 10 + 240 + 1 = 251 \text{ [ms]}$$

■Calculation example 3

Calculation of required time when Pr. 10 to Pr. 14 [(s2) = 5] are written by the IVBWR instruction

$Tinv=T_1+T_2+T_3=851$[ms]

$T_1=10\times(s2)=50$[ms], $T_3=1$[ms]

Calculate "T_2" as follows because Pr.10 to Pr. 14 do not require change of the 2nd parameter and the time required for writing is same in each parameter.

$$T_2 = \underbrace{(2 \times (T_4+T_5) + T_6[1]+T_6[2])}_{\text{Time required to write Pr. 10}} + \underbrace{(2 \times (T_4+T_5) + T_6[3]+T_6[4])}_{\text{Time required to write Pr. 11}} + \cdots$$

$$= \underbrace{5}_{(s2)} \times (2 \times (T_4+T_5) + T_6[1] + T_6[2]) = 5 \times (2 \times (30+10) + 30 + 50) = 800 \text{ [ms]}$$

$$T_4 = (\mathrm{INT}(\frac{1}{10}+1) \times 10) + (\mathrm{INT}(\frac{11}{10}+1) \times 10) = 30 \text{ [ms]}$$

$$T_5 = \mathrm{INT}(\frac{1}{10}+1) \times 10 = 10 \text{ [ms]}$$

$$T_6[1] = (\mathrm{INT}(\frac{T_7[1]+T_8[1]+T_9[1]}{10})+1) \times 10 + (\mathrm{INT}(\frac{1}{10}+1) \times 10) = (\mathrm{INT}(\frac{19.8}{10}+1) \times 10 + 10 = 30 \text{ [ms]}$$

$$T_7[1] + T_8[1] + T_9[1] = 7.8 + 12 = 19.8 \text{ [ms]}$$

$$T_7[1] + T_9[1] = ((\frac{1}{19200}) \times (11+4) \times 10) \times 1000 = 7.8 \text{ [ms]}$$

$$T_8[1] = 12 \text{ [ms]}$$

$$T_6[2] = (\mathrm{INT}(\frac{T_7[2]+T_8[2]+T_9[2]}{10})+1) \times 10 + (\mathrm{INT}(\frac{1}{10}+1) \times 10) = (\mathrm{INT}(\frac{38.9}{10}+1) \times 10 + 10 = 50 \text{ [ms]}$$

$$T_7[2] + T_8[2] + T_9[2] = 8.9 + 30 = 38.9 \text{ [ms]}$$

$$T_7[2] + T_9[2] = ((\frac{1}{19200}) \times (13+4) \times 10) \times 1000 = 8.9 \text{ [ms]}$$

$$T_8[2] = 30 \text{ [ms]}$$

$$Tinv = T_1 + T_2 + T_3 = 50 + 800 + 1 = 851 \text{ [ms]}$$

5.5 Wiring

This section explains about the wiring.

Wiring procedure

1. Select the connection method

Confirm the inverter connection method. (☞ Page 101 Connection method)

2. Make arrangements for wiring

Prepare cables (☞ Page 103 Cable), distributors (☞ Page 105 Connection devices (RJ45 connector and distributor)) and termination resistors (☞ Page 106 Termination resistor setting) required for wiring.

3. Turn OFF the PLC power

Before wiring, make sure that the PLC power is OFF.

4. Wire the communication equipment.

Connect RS-485 communication equipment of PLC with the communication port of the inverter. (☞ Page 107 Connection diagram)

5. Set or connect termination resistors.

Set or connect termination resistor of the inverter farthest from the PLC. (☞ Page 106 Termination resistor setting)

6. Connect (Ground) a shielding wire (Class-D grounding)

When using a twisted pair cable, connect a shielding wire. (☞ Page 107 Shielded wiring)

Connection method

When connecting to RS-485 communication equipment, use the 10BASE-T cable or shielded twisted pair cables, depending on the connection method.

PU connector (RJ45 connector)	Single wire (Use twisted pair cable or 10BASE-T cable for LAN.)	Termination resistor (Which is built in the FX5 PLC, and must be arranged by the user for the inverter, and supplied with or built in for other communication equipment)

F800/A800/F700P/A700 series

■Built-in RS-485 terminal

- In the case of 1-to-1 connection

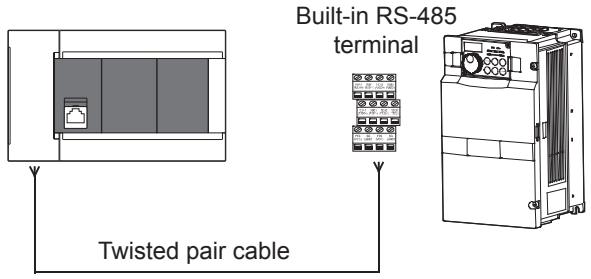

- In the case of 1-to-n connection

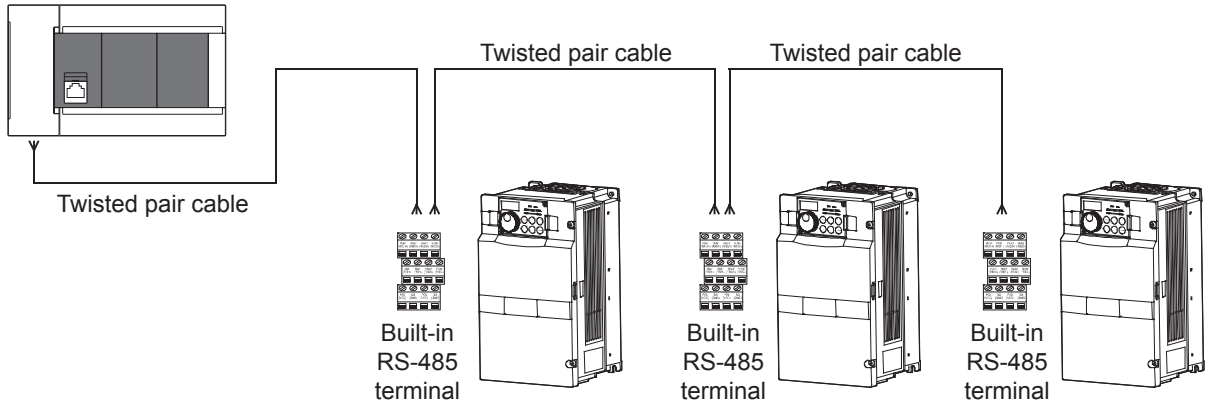

F700PJ/E700/E700EX/D700/V500 series

■PU connector

- In the case of 1-to-1 connection

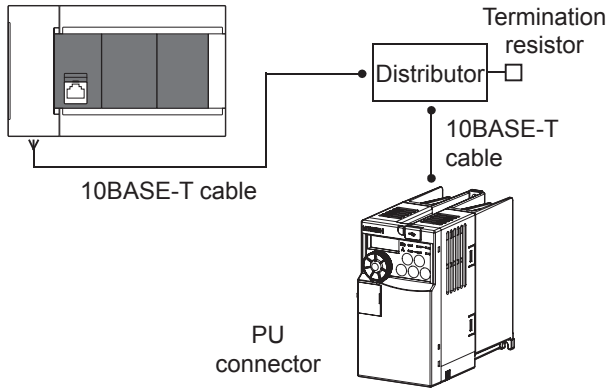

• In the case of 1-to-n connection

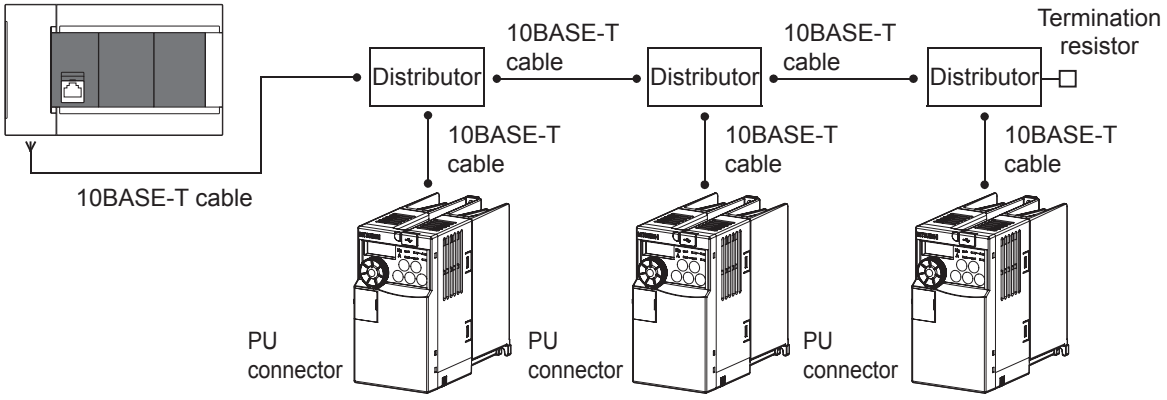

Point

• Because the termination resistor cannot be connected to the inverter, use a distributor.
• Cannot be connected to the built-in Ethernet port of the CPU module.

■FR-E7TR (E700 Series only)

• In the case of 1-to-1 connection

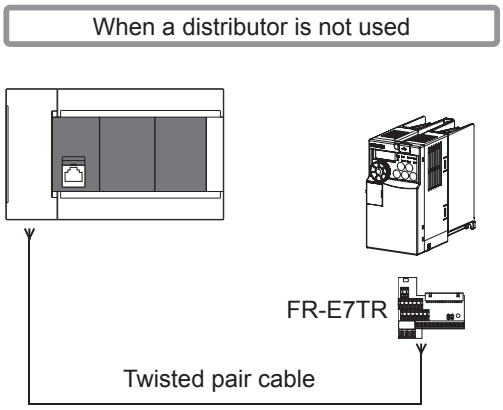

• In the case of 1-to-n connection

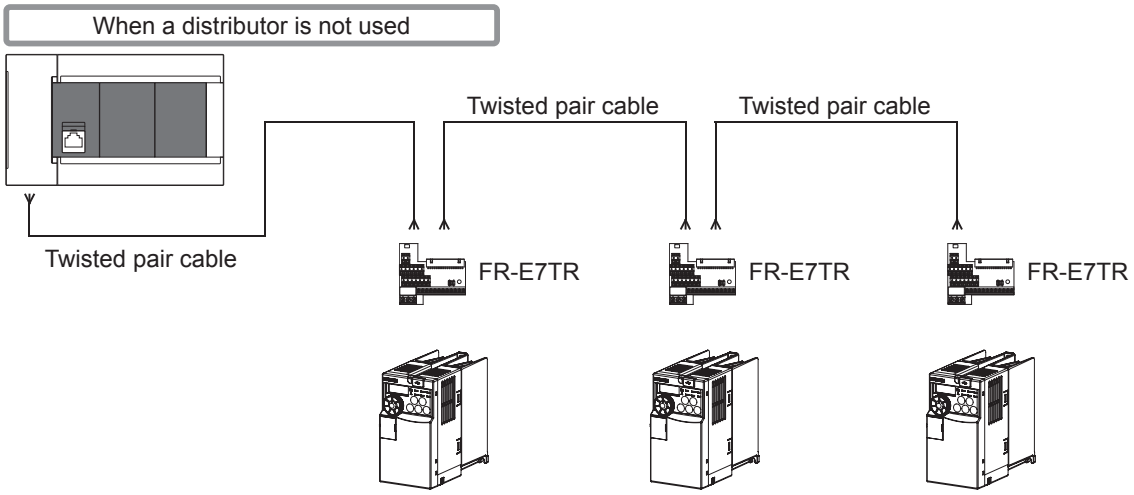

■FR-A5NR (V500 Series only)

- In the case of 1-to-1 connection

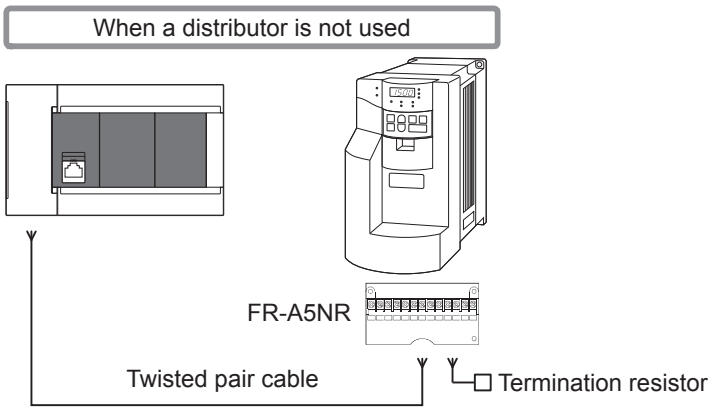

- In the case of 1-to-n connection

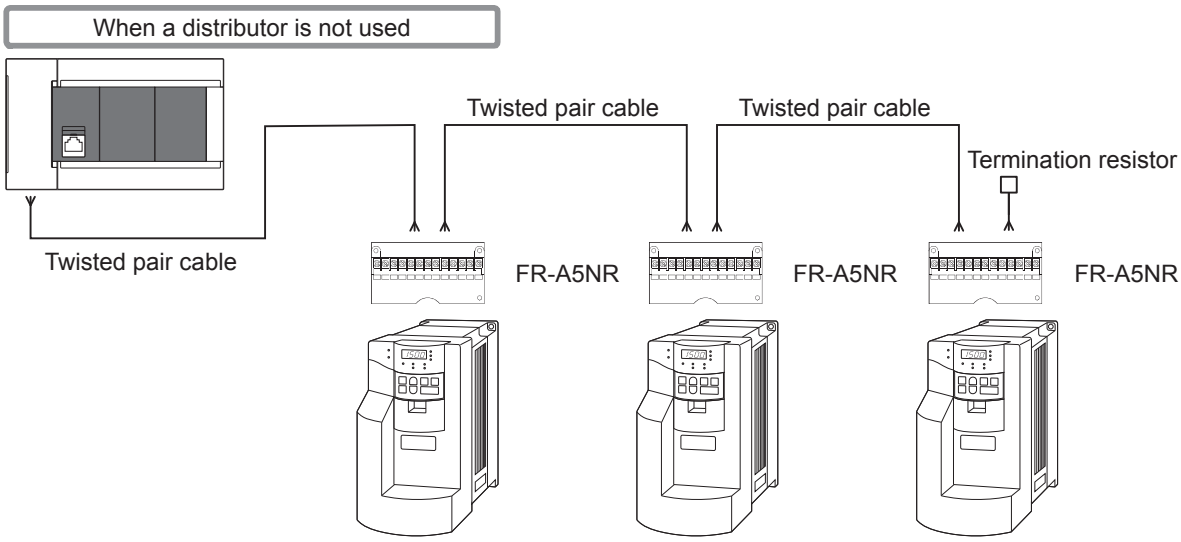

Cable

Twisted pair cable

Use commercial three-pair type twisted cables of 0.3 mm^2 or more.

The specifications of the cables used in wiring are shown.

■RS-485 cable specifications

Items	Description
Cable type	Shielded cable
Number of pairs	3p
Conductor resistance (20℃)	88.0 Ω/km or less
Insulation resistance	10000 MΩ-km or more
Voltage resistance	500 V DC, 1 minute
Electrostatic capacitance (1 kHz)	60 nF/km or less as an average
Characteristic impedance (100 kHz)	110±10 Ω

■Cable structural drawing (reference)

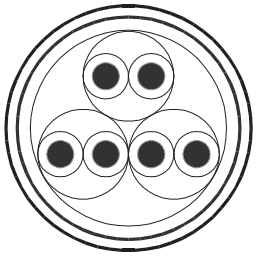

Example of three-pair cable structural drawing

■Point of contact

For details on cables such as specifications, contact each cable manufacturer.

10BASE-T cable

Available 10BASE-T cables for PC LAN wiring can be used.

■Selection procedure when purchasing

Cable type: 10BASE-T cable (Category 3 or higher)

Connection specifications: Straight type

Connector: RJ45 connector

■Precautions for using cables

Pay attention to the following points when purchasing cables.

- 5 V DC is output to the PU connector of the inverters for supplying power to the PU. Please cut pins No. 2 and 8 of commercial cables to prevent wiring to pins No. 2 and 8. ([BMJ-8-28N] distributor is recommended.)

Connecting cables

The table below shows applicable cables and tightening torques.

	Number of wires connected per terminal	Wire size		Tightening torque
		Solid wire, Stranded wire	Wire ferrule with insulation sleeve	
FX5U CPU module built-in RS-485 port	One wire	0.2 to 0.5 mm^2 (AWG24 to 20)	0.2 to 0.5 mm^2 (AWG24 to 20)	0.22 to 0.25 N·m
	Two wires	0.2 mm^2 (AWG24)	—	
FX5UC CPU module built-in RS-485 port FX5-485-BD FX5-485ADP	One wire	0.3 to 0.5 mm^2 (AWG22 to 20)	0.3 to 0.5 mm^2 (AWG22 to 20)	
	Two wires	0.3 mm^2 (AWG22)	—	

Precautions

Do not tighten terminal screws with torque beyond the specified range. Otherwise it may cause equipment failure or malfunction.

■Wire end treatment

With regard to the cable end treatment, use a stranded cable or solid cable as is, or use a wire ferrule with insulating sleeve.

- When using a stranded cable or solid cable as is

- Twist the end of stranded wire and make sure that there are no loose wires.

- Please do not solder plate the ends of the cable.

Dimensions of the cable end	
FX5U CPU module built-in RS-485 port	FX5UC CPU module built-in RS-485 port, FX5-485-BD, FX5-485ADP
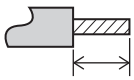 5 mm	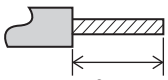 9 mm

• When using a wire ferrule with insulation sleeve

Because it is difficult to insert a cable into an insulating sleeve depending on the thickness of the cable sheath, select the proper cable according to the outline drawing.

FX5U CPU module built-in RS-485 port	FX5UC CPU module built-in RS-485 port, FX5-485-BD, FX5-485ADP
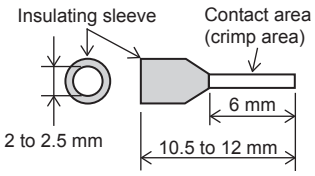	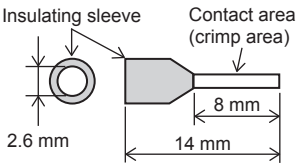

<Reference>

	Manufacturer	Model name	Crimping tool
FX5U CPU module built-in RS-485 port	PHOENIX CONTACT GmbH & Co. KG	AI 0.5-6WH	CRIMPFOX 6 CRIMPFOX 6T-F
FX5UC CPU module built-in RS-485 port FX5-485-BD FX5-485ADP		AI 0.5-8WH	

• Tool

For tightening the terminal, use a commercially available small screwdriver with straight tip that is not widened toward the end as shown below.

■Precautions

If the diameter of the screwdriver tip is too small, the required tightening torque cannot be achieved. To achieve the appropriate tightening torque shown in the previous page, use the following screwdriver or its equivalent (grip diameter: approximately 25 mm).

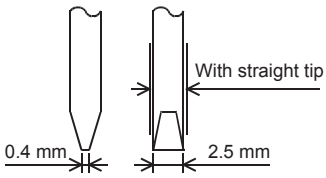

<Reference>

Manufacturer	Model name
PHOENIX CONTACT GmbH & Co. KG	SZS 0.4×2.5

Connection devices (RJ45 connector and distributor)

Prepare the following devices if necessary.

Product name	Model name	Manufacturer
RJ45 connector	5-554720-3	Tyco Electronics Japan, Ltd.
Distributor	BMJ-8 BMJ-8-28N (no internal connection for pins 2 and 8) (Do not use plug with termination resistor.)	HACHIKO ELECTRIC CO., LTD

Termination resistor setting

Set or connect termination resistor of the inverter farthest from the FX5 PLC.

For details on connection, refer to ☞ Page 107 Connection diagram.

At the FX5 PLC

The built-in RS-485 port, FX5-485-BD and FX5-485ADP have a built-in termination resistor.

Set the termination resistor selector switch to 110 Ω.

■FX5U CPU module built-in RS-485 port

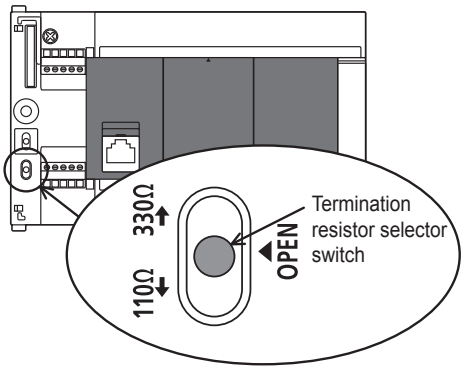

■FX5UC CPU module built-in RS-485 port

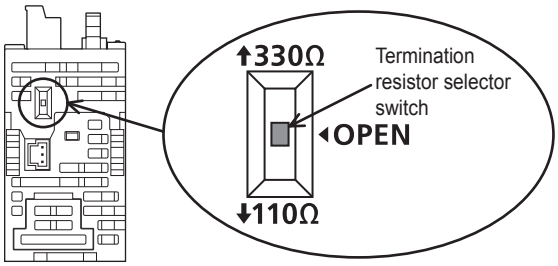

■FX5-485-BD

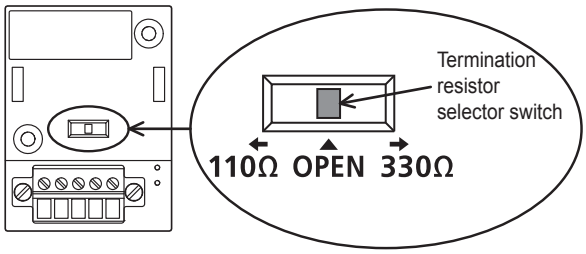

■FX5-485ADP

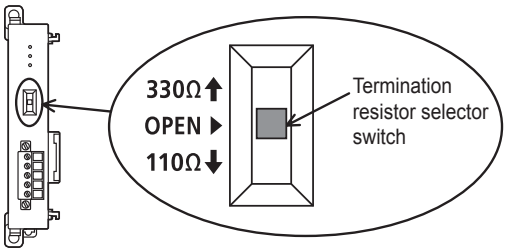

At the Inverter

Communication may be affected by noise echo depending on the transmission speed and transmission distance. If communication is hindered by noise echo, connect a termination resistor to the inverter.

■Built-in RS-485 terminal

A built-in termination resistor is provided. Connect a 100 Ω termination resistor to the inverter farthest from the PLC.

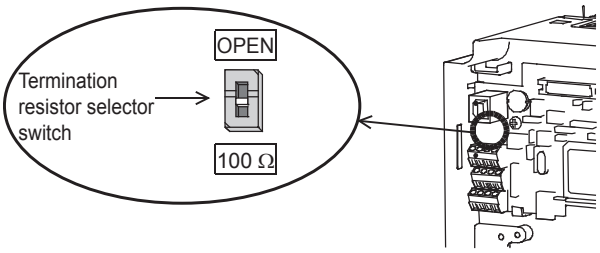

■PU connector

The customer needs to provide 100 Ω, 1/2 W termination resistors such as the following.

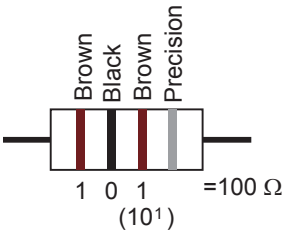

- Connect a termination resistor between pin No. 3 (RDA) and pin No. 6 (RDB).
- Connect a distributor to the PU terminal because termination resistors cannot be connected.
- Connect a termination resistor only to the inverter located furthest away from the PLC.

■FR-E7TR

A built-in termination resistor is provided. Connect a 100 Ω termination resistor to the inverter farthest from the PLC.

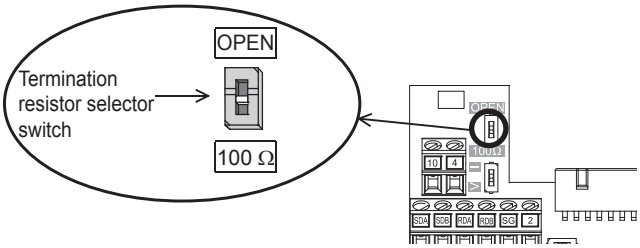

■FR-A5NR

Connect a termination resistor chip (which is supplied together with the FR-A5NR) between the RDB and RDR terminals of the inverter farthest from the PLC.

Shielded wiring

Perform Class-D grounding for the shield of one side of the cable (ground resistance: 100 Ω or less).

For details on connection, refer to ☞ Page 107 Connection diagram.

Connection diagram

F800/A800/F700P/A700 series

■Built-in RS-485 terminal

- When one inverter is connected

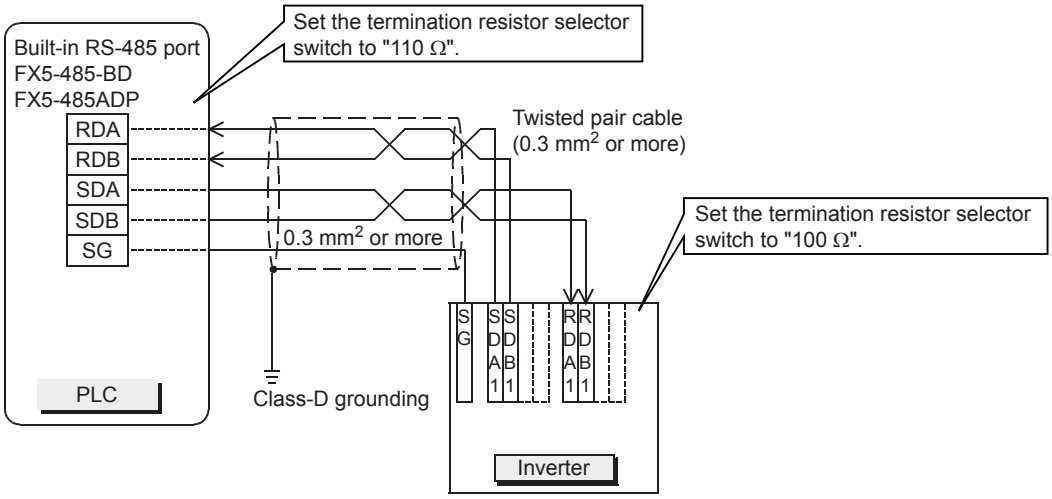

• When multiple (up to 16) inverters are connected

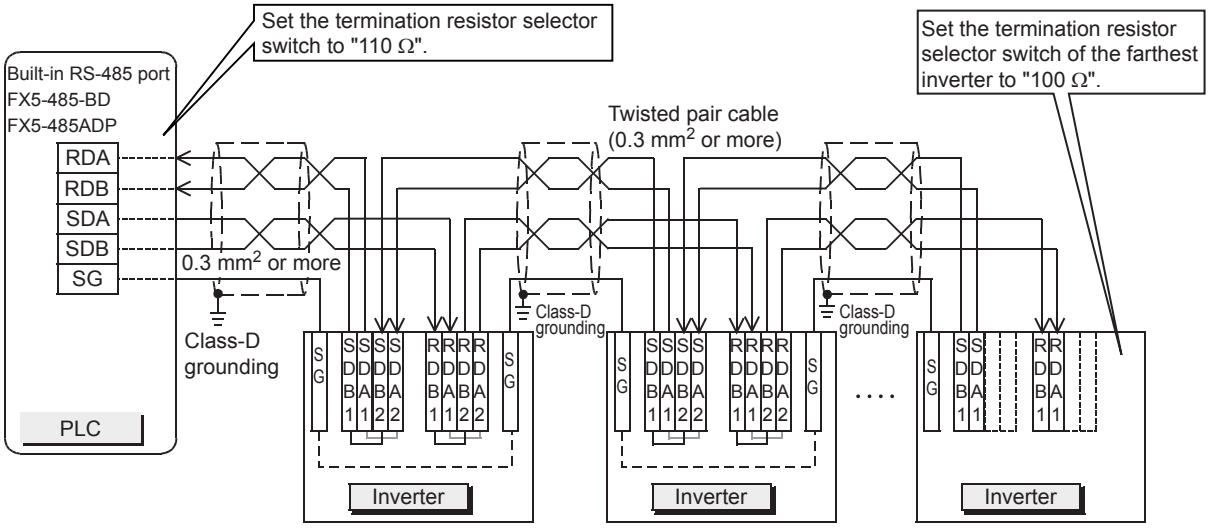

For branching, perform wiring as shown below:

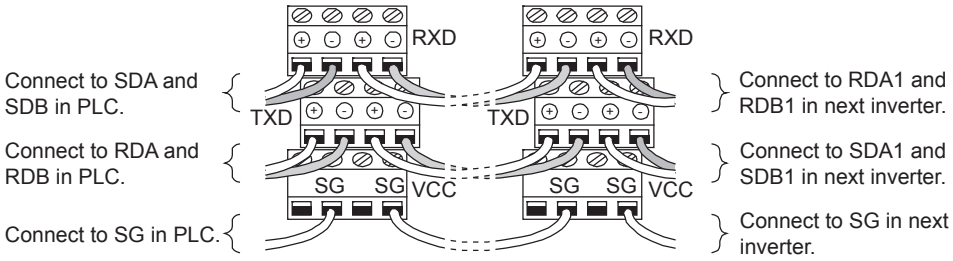

F700PJ/E700/E700EX/D700/V500 series

■PU connector

• When one inverter is connected (4-wire type)

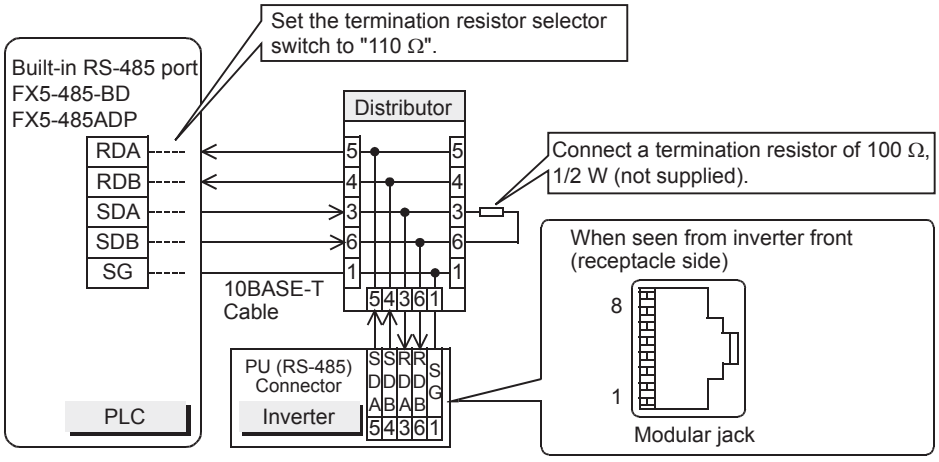

- When multiple (up to 16) inverters are connected (4-wire type)

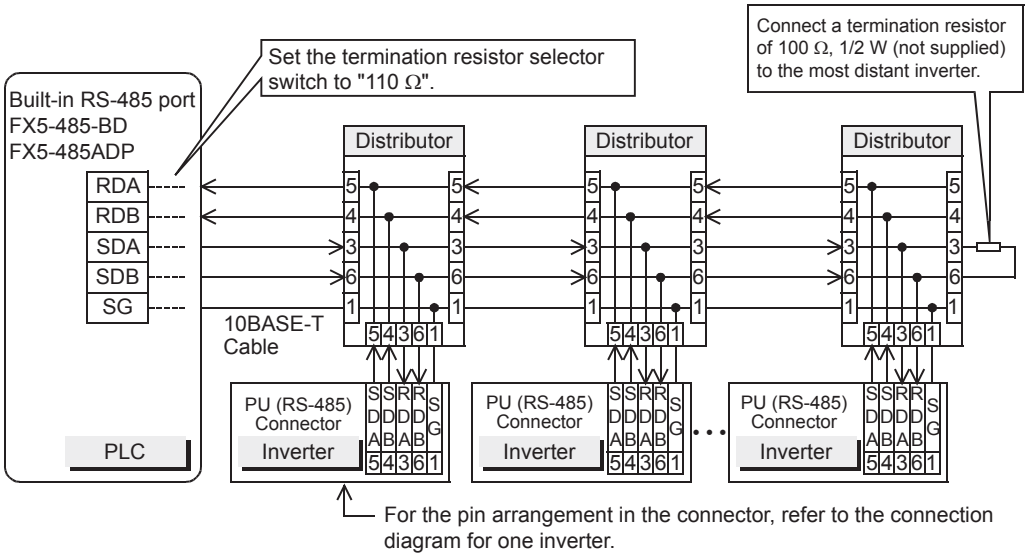

- When one inverter is connected (2-wire type, E700 Series only)

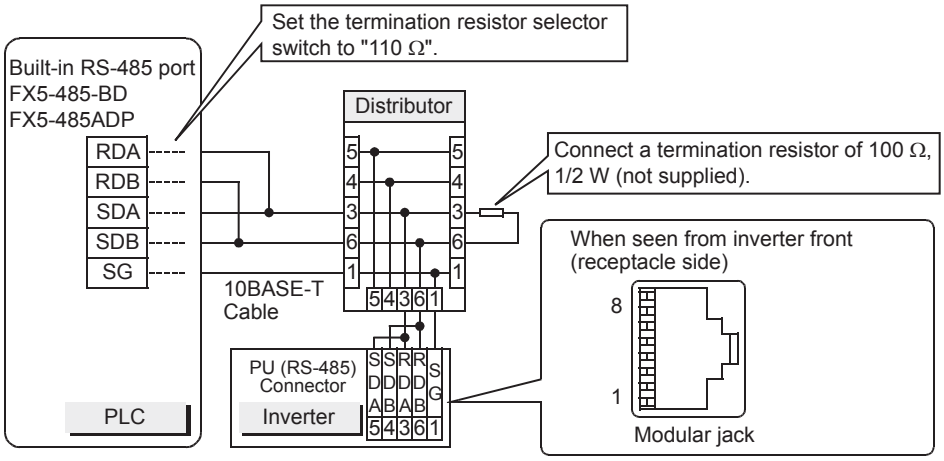

- When multiple inverters are connected (up to 16) (2-wire type, E700 Series only)

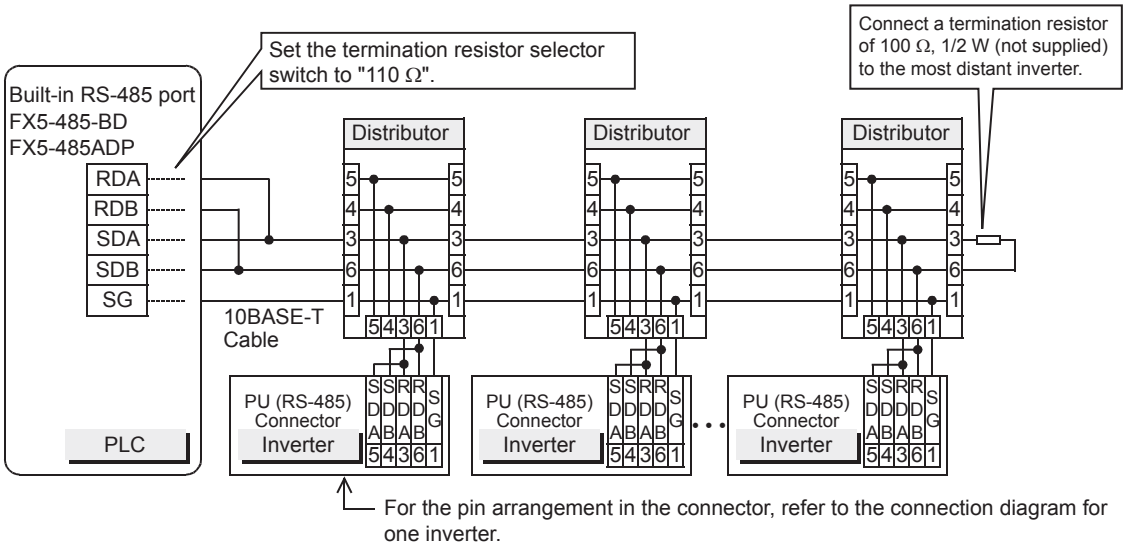

■FR-E7TR

- When one inverter is connected (4-wire type)

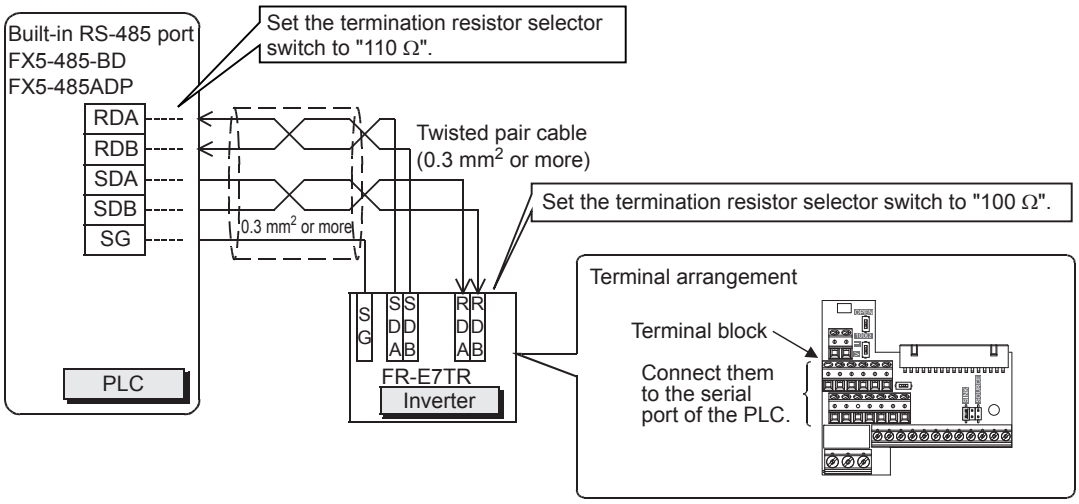

- When multiple (up to 16) inverters are connected (4-wire type)

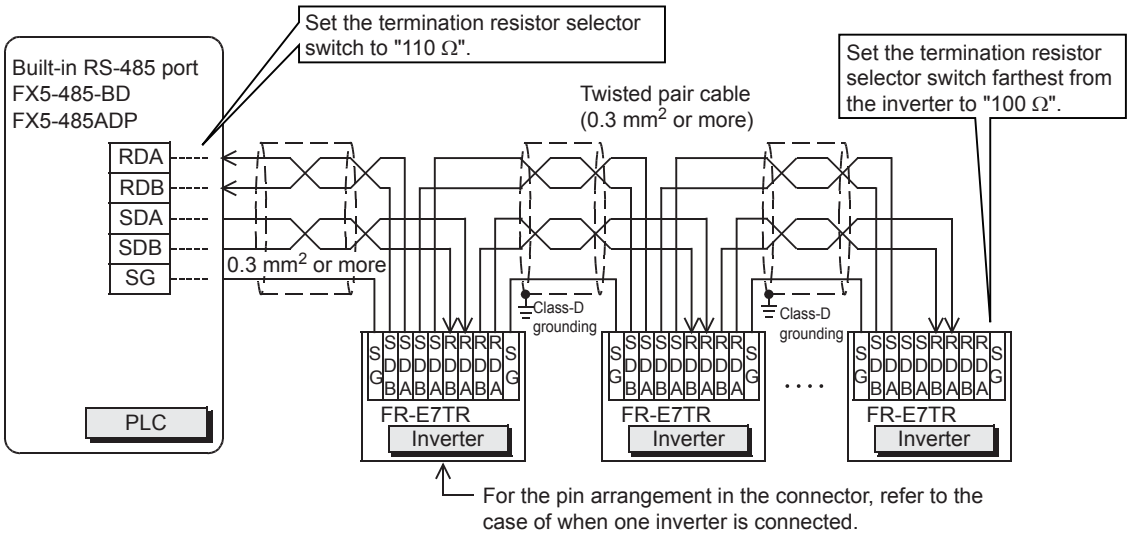

For branching, perform wiring as shown below: (4-wire type)

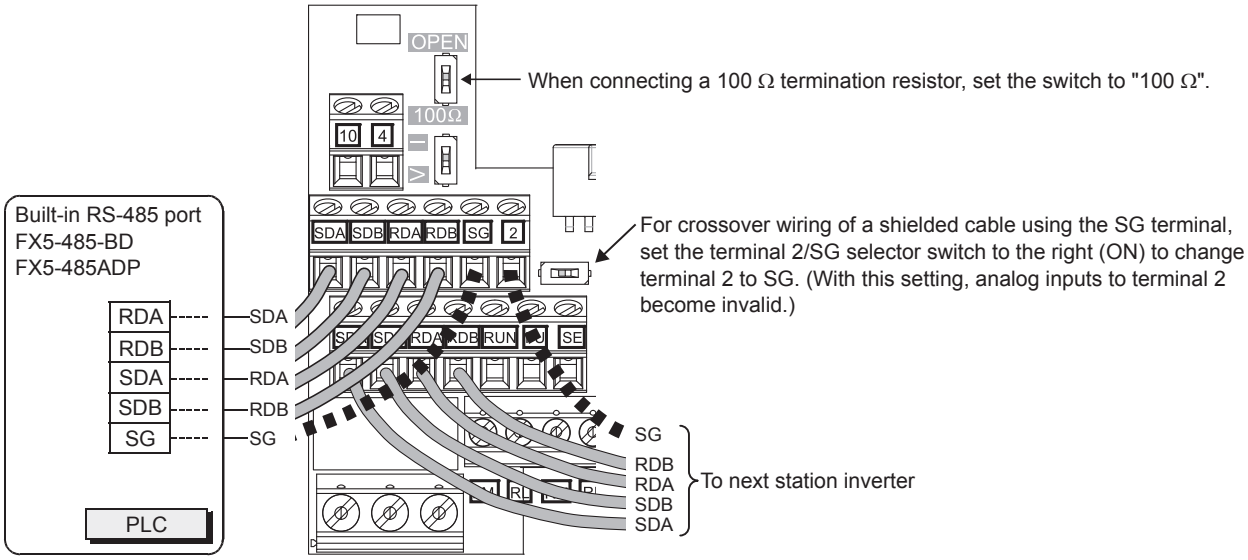

• When one inverter is connected (2-wire type)

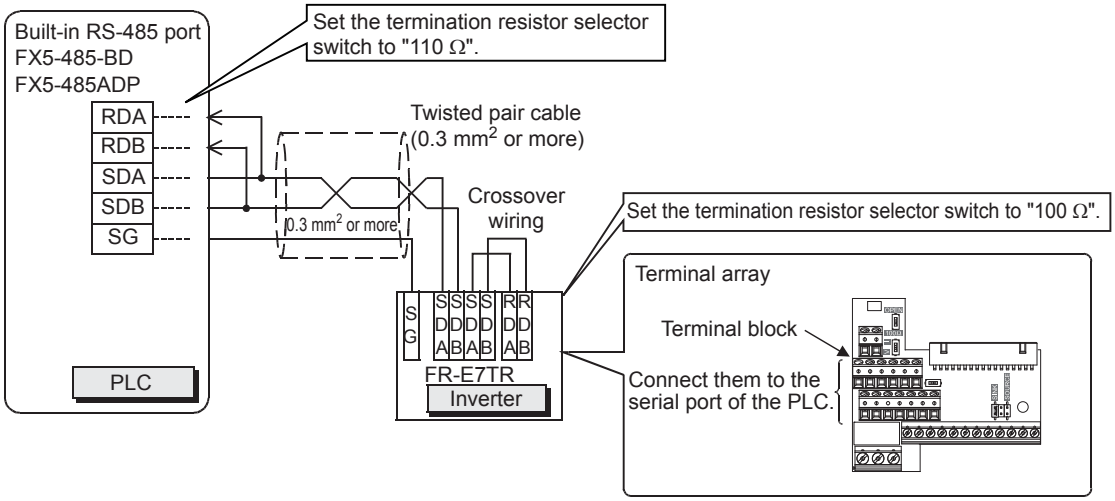

• When multiple (up to 16) inverters are connected (2-wire type)

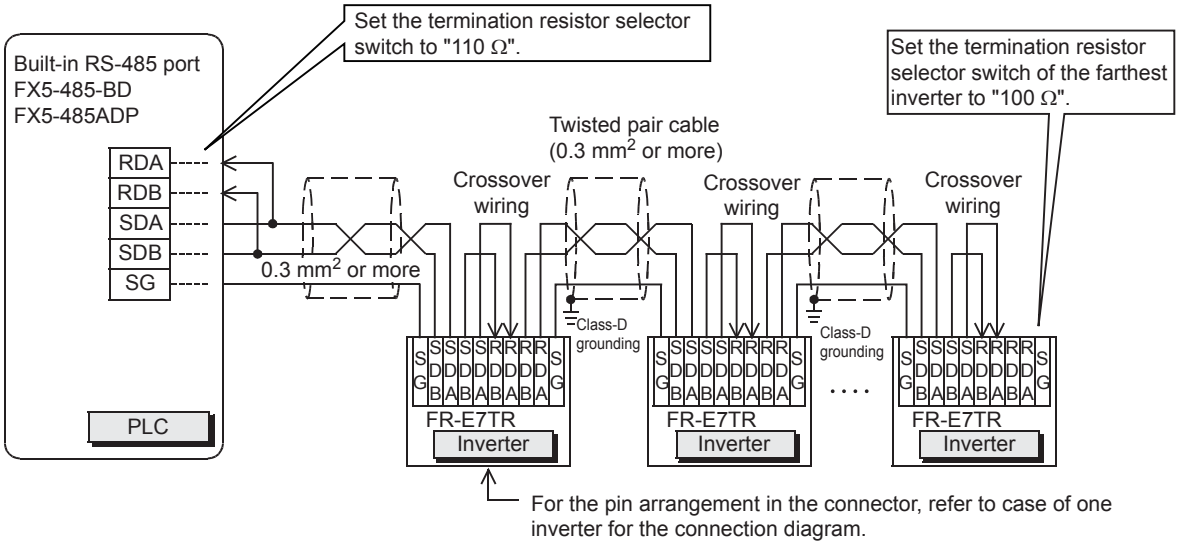

For branching, perform wiring as shown below: (2-wire type)

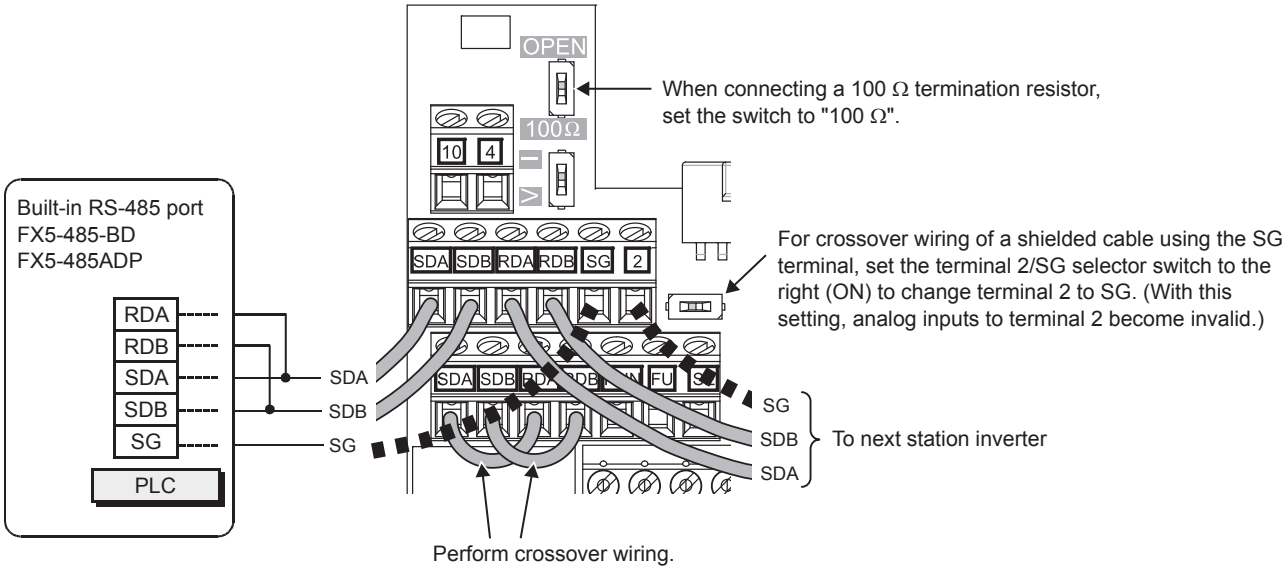

■FR-A5NR

- When one inverter is connected

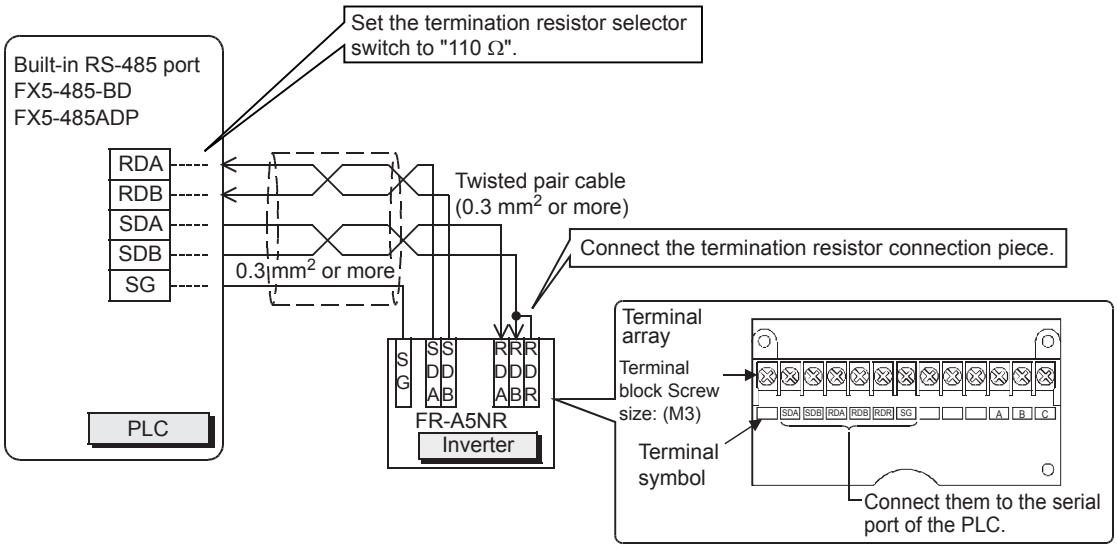

- When multiple (up to 16) inverters are connected

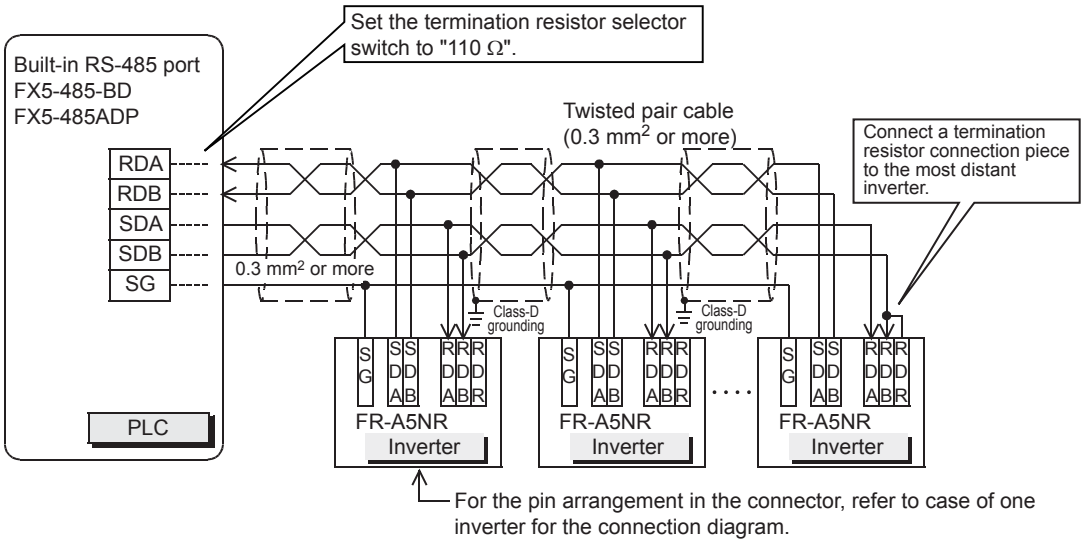

Grounding

Grounding should be performed as stated below.

- Perform Class-D grounding. (grounding resistance: 100 Ω or less)
- Independent grounding should be performed for best results.

When independent grounding cannot be performed, perform "shared grounding" as shown in the following figure.

For details, refer to the following.

📖MELSEC iQ-F FX5U User's Manual (Hardware)

📖MELSEC iQ-F FX5UC User's Manual (Hardware)

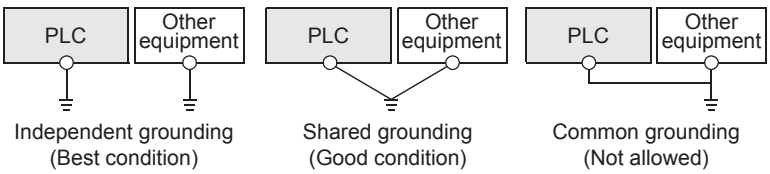

- The grounding wire size should be AWG 14 (2 mm^2) or larger.
- Bring the grounding point close to the PLC as much as possible so that the ground cable can be shortened.

5.6 Inverter Communication Settings

Before connecting an inverter to a PLC, set parameters related to communication in the inverter parameter unit (PU) in advance.

For details on each function, refer to the inverter manual for each respective series.

Model	Model classification	Connection destination	Relevant parameters	Reference section
F800 Series	Inverter built in	RS-485 terminal	Pr.79, Pr.331 to Pr.342, Pr.549 P.N000, P.N001, P.N030 to P.N038, P.D000, P.D001, P.D010, P.D011	Page 113
A800 Series	Inverter built in	RS-485 terminal	Pr.79, Pr.331 to Pr.342, Pr.549 P.N000, P.N001, P.N030 to P.N038, P.D000, P.D001, P.D010, P.D011	Page 113
F700PJ Series	Inverter built in	PU port	Pr.79, Pr.117 to Pr.124, Pr.340, Pr.549	Page 116
F700P Series	Inverter built in	RS-485 terminal	Pr.79, Pr.331 to Pr.342, Pr.549	Page 115
A700 Series	Inverter built in	RS-485 terminal	Pr.79, Pr.331 to Pr.342, Pr.549	
E700 Series	Inverter built in	PU port	Pr.79, Pr.117 to Pr.124, Pr.340, Pr.549	Page 116
	Option	FR-E7TR		
E700EX Series	Inverter built in	PU port	Pr.79, Pr.117 to Pr.124, Pr.340, Pr.549	
D700 Series	Inverter built in	PU port	Pr.79, Pr.117 to Pr.124, Pr.340, Pr.549	
V500 Series	Inverter built in	PU port	Pr.79, Pr.117 to Pr.124, Pr.342	Page 117
	Option	FR-A5NR	Pr.79, Pr.331 to Pr.342	

Point

If these parameters are overwritten by the PLC after the inverter is connected, communication will be disabled.

If these parameters are changed by mistake, they should be set again.

FREQROL-F800/A800 series

▶Connection destination: Built-in RS-485 terminal

Contents of communication setting (essential items)

The table below shows parameters which should be set in all cases.

Pr.	Parameter group	Parameter item	Setting value	Set conditions
331	N030	RS-485 communication station	0 to 31	Up to 16 inverters can be connected.
332	N031	RS-485 communication speed	48	4800 bps
			96	9600 bps
			192	19200 bps
			384	38400 bps
			576	57600 bps
			1152	115200 bps
333	—	RS-485 communication stop bit length/ data length	10	Data length: 7 bits Stop bit: 1 bit
	N032	RS-485 communication data length	1	Data length: 7 bits
	N033	RS-485 communication stop bit length	0	Stop bit: 1 bit
334	N034	RS-485 communication parity check selection	2	Even
337	N037	RS-485 communication waiting time setting	9999	Set in communication data
341	N038	RS-485 communication CR/LF selection	1	CR: Provided, LF: Not provided
549	N000	Protocol selection	0	Mitsubishi inverter (computer link) protocol
79	D000	Operation mode selection	0	External operation mode is selected when power is turned ON.
340	D001	Communication startup mode selection	1	Network operation mode

Parameters (test operation, operation)

Parameters that must be adjusted for test operation and operation are as follows.

Pr.	Parameter group	Parameter item	Setting value	Set conditions
335	N035	RS-485 communication number of retries	9999	Set the value shown on the left during adjustment, and set a value from 1 to 10 during operation.
336	N036	RS-485 communication check time interval	9999	Set the value shown on the left during adjustment, and set a value in accordance with the system specification during operation.

■Cautions during setting

Caution for setting the RS-485 communication check time interval (Pr.336, P.N036)

Description	Setting value
During adjustment or when communication with the PLC is not executed periodically	9999
When communication with the PLC is not executed	0
Set the communication time in the following cases. • When it is necessary to monitor absence of communication for a certain time and stop the inverter in such a case while communication with the PLC is being executed continuously • When it is necessary to stop the motor at the point when the PLC mode is changed from RUN→STOP	1 to 9998

Parameters (set as needed)

The table below shows parameters to be considered when using system configuration and inverters in various ways.

For the method of use, refer to the respective inverter manual.

Pr.	Parameter group	Parameter item	Setting value	Set conditions
342	N001	Communication EEPROM write selection	0 or 1	0: Write to EEPROM and RAM 1: Write to RAM only.
338	D010	Communication operation command source	0 or 1	0: PLC 1: Outside
339	D011	Communication speed command source	0 or 1	0: PLC 1: Outside

FREQROL-F700P/A700 series

▶Connection destination: Built-in RS-485 terminal

Contents of communication setting (essential items)

The table below shows parameters which should be set in all cases.

Parameter No.	Parameter item	Setting value	Set conditions
Pr.331	RS-485 communication station	0 to 31	Up to 16 inverters can be connected.
Pr.332	RS-485 communication speed	48	4800 bps
		96	9600 bps
		192	19200 bps
		384	38400 bps
Pr.333	RS-485 communication stop bit length	10	Data length: 7 bits Stop bit: 1 bit
Pr.334	RS-485 communication parity check selection	2	Even
Pr.337	RS-485 communication waiting time setting	9999	Set in communication data
Pr.341	RS-485 communication CR/LF selection	1	CR: Provided, LF: Not provided
Pr.79	Operation mode selection	0	External operation mode is selected when power is turned ON.
Pr.549	Protocol selection	0	Mitsubishi inverter (computer link) protocol
Pr.340	Communication startup mode selection	1	Network operation mode

Parameters (test operation, operation)

Parameters that must be adjusted for test operation and operation are as follows.

Parameter No.	Parameter item	Setting value	Set conditions
Pr.335	RS-485 communication number of retries	9999	Set the value shown on the left during adjustment, and set a value from 1 to 10 during operation.
Pr.336	RS-485 communication check time interval	9999	Set the value shown on the left during adjustment, and set a value in accordance with the system specification during operation.

■Cautions during Setting

Caution for setting the RS-485 communication check time interval (Pr.336)

Description	Setting value
During adjustment or when communication with the PLC is not executed periodically	9999
When communication with the PLC is not executed	0
Set the communication time in the following cases. • When it is necessary to monitor absence of communication for a certain time and stop the inverter in such a case while communication with the PLC is being executed continuously • When it is necessary to stop the motor at the point when the PLC mode is changed from RUN→STOP	1 to 9998

Parameters (set as needed)

The table below shows parameters to be considered when using various system configuration and inverters.
For the method of use, refer to the respective inverter manual.

Parameter No.	Parameter item	Setting value	Set conditions
Pr.342	Communication EEPROM write selection	0 or 1	0: Write to EEPROM and RAM 1: Write to RAM only.
Pr.338	Communication operation command rights	0 or 1	0: PLC 1: Outside
Pr.339	Communication speed command rights	0 or 1	0: PLC 1: Outside

FREQROL-F700PJ/E700/D700/E700EX series

▶Connection destination: PU port, FR-E7TR

Contents of communication setting (essential items)

The table below shows parameters which should be set in all cases.

Parameter No.	Parameter item	Setting value	Set conditions
Pr.117	PU communication station number	0 to 31	Up to 16 inverters can be connected.
Pr.118	PU communication speed	48	4800 bps
		96	9600 bps
		192	19200 bps
		384	38400 bps
Pr.119	PU communication stop bit length	10	Data length: 7 bits Stop bit: 1 bit
Pr.120	PU communication parity check	2	Even
Pr.123	PU communication waiting time setting	9999	Set in communication data
Pr.124	PU communication CR/LF presence/absence selection	1	CR: Provided, LF: Not provided
Pr.79	Operation mode selection	0	External operation mode is selected when power is turned ON.
Pr.549	Protocol selection	0	Mitsubishi inverter (computer link) protocol
Pr.340	Communication startup mode selection	1 or 10	1: Network operation mode 10: Network operation mode (Operation mode can be changed between the PU operation mode and network operation mode from the operation panel.)

Parameters (test operation, operation)

Parameters that must be adjusted for test operation and operation are as follows.

Parameter No.	Parameter item	Setting value	Set conditions
Pr.121	Number of PU communication retries	9999	Set the value shown on the left during adjustment, and set a value from 1 to 10 during operation.
Pr.122	PU communication check time interval	9999	Set the value shown on the left during adjustment, and set a value in accordance with the system specification during operation.

■Cautions during setting

Caution for setting the PU communication check time interval (Pr.122)

Description	Setting value
During adjustment or when communication with the PLC is not executed periodically	9999
When communication with the PLC is not executed	0
Set the communication time in the following cases. • When it is necessary to monitor absence of communication for a certain time and stop the inverter in such a case while communication with the PLC is being executed continuously • When it is necessary to stop the motor at the point when the PLC mode is changed from RUN→STOP	1 to 9998

Parameters (set as needed)

The table below shows parameters to be considered when using various system configurations and inverters.

For the method of use, refer to the respective inverter manual.

Parameter No.	Parameter item	Setting value	Set conditions
Pr.37	Speed display*1	0 or 0.01 to 9998	0: Frequency display, setting 0.01 to 9998: Machine speed at 60 Hz.
Pr.146	Built-in potentiometer switching*2	0 or 1	0: The built-in frequency setting knob is valid. 1: The built-in frequency setting knob is invalid.
Pr.342	Communication EEPROM write selection	0 or 1	0: Write to EEPROM and RAM 1: Write to RAM only.

*1 This inverter communication function cannot read or write Pr. 37.
Set Pr.37 to "0" when setting or monitoring the frequency in the PLC.
If any value other than "0" is set and the instruction code HFF is set to "01", the frequency may not be set or monitored normally.

*2 Set Pr.146 to "1" when changing the frequency from the PLC.

FREQROL-V500 series

▶Connection destination: PU port, FR-A5NR

Contents of communication setting (essential items)

The table below shows parameters which should be set in all cases.

Parameter No.	Parameter item	Setting value	Set conditions
Pr.117	Communication station number	0 to 31	Up to 16 inverters can be connected.
Pr.118	Communication speed	48	4800 bps
		96	9600 bps
		192	19200 bps
Pr.119	Stop bit length/data length	10	Data length: 7 bits Stop bit: 1 bit
Pr.120	Parity check provided/not provided	2	Even
Pr.123	Waiting time setting	9999	Set in communication data
Pr.124	CR/LF provided/not provided selection	1	CR: Provided, LF: Not provided
Pr.79	Operation mode selection	0	External operation mode is selected when power is turned ON.
Pr.340	Communication startup mode selection	1 or 10	1: Network operation mode 10: Network operation mode (Operation mode can be changed between the PU operation mode and network operation mode from the operation panel.)

Parameters (test operation, operation)

Parameters that must be adjusted for test operation and operation are as follows.

Parameter No.	Parameter item	Setting value	Set conditions
Pr.121	Number of communication retries	9999	Set the value shown on the left during adjustment, and set a value from 1 to 10 during operation.
Pr.122	Communication check time interval	9999	Set the value shown on the left during adjustment, and set a value in accordance with the system specification during operation.

■Cautions during setting

Caution for setting the PU communication check time interval (Pr.122)

Description	Setting value
During adjustment or when communication with the PLC is not executed periodically	9999
When communication with the PLC is not executed	0
Set the communication time in the following cases. • When it is necessary to monitor absence of communication for a certain time and stop the inverter in such a case while communication with the PLC is being executed continuously • When it is necessary to stop the motor at the point when the PLC mode is changed from RUN→STOP	1 to 9998

Parameters (set as needed)

The table below shows parameters to be considered when using various system configurations and inverters.

For the method of use, refer to the V500 series inverter manual.

Parameter No.	Parameter item	Setting value	Set conditions
Pr.342	Communication EEPROM write selection	0 or 1	0: EEPROM is written. 1: RAM is written.

5.7 PLC Communication settings

For the FX5 communication settings of this function, parameters are set using GX Works3. For details about GX Works3, refer to 📖GX Works3 Operating Manual.

Setting of parameter differs according to the module used. The procedure for each module is as follows.

Built-in RS-485 port (CH1)

Navigation Window ⇨ Parameter ⇨ FX5UCPU ⇨ Module Parameter ⇨ 485 Serial Port

Window

The following screen will be displayed if [Inverter Communication] is set for the communication protocol type.

■Basic Settings

Item	Setting
⊟ *Communication Protocol Type*	Set communication protocol type.
Communication Protocol Type	Inverter Communication
⊟ Advanced Settings	Set detailed setting.
Data Length	7bit
Parity Bit	Even
Stop Bit	1bit
Baud Rate	9,600bps

■Fixed Setting

Item	Setting
⊟ *Response Waiting Time*	Set response waiting time.
Response Waiting Time	100 ms

■SM/SD Setting

Item	Setting
⊟ *Latch Setting*	**Set the latch of SM/SD device.**
Advanced Settings	Do Not Latch
Response Waiting Time	Do Not Latch
⊟ **FX3 Series Compatibility**	**The SM/SD device of FX3 series compatibility.**
SM/SD for Compatible	Disable

Communication board (CH2)

Navigation Window ⇨ Parameter ⇨ FX5UCPU ⇨ Module Parameter ⇨ Extended Board

Window

The following screen will be displayed if [FX5-485-BD] is set for the extended board and [Inverter Communication] is set for the communication protocol type. Fixed setting and SM/SD setting are the same as in the case of built-in RS-485 port (CH1).

■Basic Settings

Item	Setting
⊟ *Extended Board*	**Set the extended board type.**
Extended Board	FX5-485-BD
⊟ **Communication Protocol Type**	**Set communication protocol type.**
Communication Protocol Type	Inverter Communication
⊟ **Advanced Settings**	**Set detailed setting.**
Data Length	7bit
Parity Bit	Even
Stop Bit	1bit
Baud Rate	9,600bps

Communication adapter (CH3/CH4)

When an expansion adapter is used, add expansion adapter to Module Information.

Navigation window ⇨ Parameter ⇨ Module Information ⇨ Right-click ⇨ Add New Module

After adding the expansion adapter, make settings on the screen displayed from the following operation.

Navigation window ⇨ Parameter ⇨ Module Information ⇨ ADP1 to ADP6 (Communication adapter) ⇨ Module Parameter

Window

Each setting screen is the same as in the case of built-in RS-485 port (CH1).

Parameter setting details

Set the following items for serial ports that use inverter communication.

	Item		Description	Reference section
Basic Settings	Extended Board*1		When using this function, select [FX5-485-BD].	—
	Communication Protocol Type		When using this function, select [Inverter Communication].	
	Advanced Settings	Data Length	7bit/8bit	
		Parity Bit	None/Odd/Even	
		Stop Bit	1bit/2bit	
		Baud Rate	4800bps/ 9600bps/ 19200bps/ 38400bps/ 57600bps/ 115200bps	
Fixed Setting	Response Waiting Time		1 to 32767 (ms)	—
SM/SD Setting	FX3 Series Compatibility	SM/SD for Compatible	Disable/CH1/CH2	Refer to the following

*1 Only in the case of communication board (CH2).

The following settings are unnecessary (fixed values).

Items	Description
Start Bit	1 bit
Header	Not Added
Terminator	Not Added
Control Mode	None
Sum Check Code	Not Added
Control Procedure	None

FX3 Series-compatible SM/SD

When using the FX3 Series compatible SM/SD storage area, set to use special devices for either the FX3 Series CH1 or CH2.
FX3 Series compatible devices corresponding to the specified channel can be used.
For details, refer to the following.
☞ Page 147 Related Devices

5.8 Programming

This section explains how to create programs which change parameters of inverters and give operation commands to inverters.
A program example is shown for each inverter communication instruction.
For details on related devices, refer to ☞ Page 147 Related Devices.

Common items in inverter communication instructions

Inverter communication types

The PLC and inverter communicate using inverter communication instructions.
There are six types of inverter communication instructions that differ according to data communication direction and parameter writing/reading direction as follows.

Instruction	Function	Control direction	Reference section
IVCK	Monitors operations of an inverter	PLC←Inverter	Page 126
IVDR	Controls operations of an inverter	PLC→Inverter	Page 128
IVRD	Reads a parameter from an inverter.	PLC←Inverter	Page 130
IVWR	Writes a parameter to an inverter.	PLC→Inverter	Page 132
IVBWR	Writes multiple parameters to an inverter.	PLC→Inverter	Page 134
IVMC	Multiple inverter commands	PLC↔Inverter	Page 137

Function and operation

■Communication start timing

At the rising edge (OFF→ON) of the drive contact of the inverter communication instruction, the PLC starts communication with an inverter.

Even if the drive contact turns OFF during communication with an inverter, the PLC executes communication until the last instruction.

When the drive contact is always ON, the PLC executes communication repeatedly.

■Communication execution state output device

The inverter communication instruction of the FX5 specifies communication execution state in operand (d) or (d2).

Bit device (3 bit occupied) outputs according to state of inverter communication instruction (execution in progress/normal completion/error completion); the state can be confirmed from specified bit device.

The operations of the specified bit devices (3 bit occupied) and data that can be handled simultaneously are as follows. The following device is not dedicated to a single inverter communication instruction, but is rather shared with other inverter communication instructions. Operation may vary with execution of other instructions. The status of SM8029 is "ON" regardless of whether operation ends normally or abnormally. (d)+2 or (d2)+2 is however ON when operation ends abnormally, so you can distinguish between normal operation end or abnormal end.

Communication execution state output device	Name	Operation	Device operated simultaneously	
(d) or (d2)	Instruction execution flag	During instruction execution: ON Other than instruction execution: OFF	Inverter communicating	CH1: SM8920 CH2: SM8930 CH3: SM8940 CH4: SM8950
(d) +1 or (d2) +1	Instruction execution normal end flag	When instruction is completed normally: ON When instruction activation contact rises: OFF	Operation of the instruction execution complete flag	SM8029
(d) +2 or (d2) +2	"Instruction abnormal end" flag	When instruction ends in error: ON When instruction activation contact rises: OFF		

■Simultaneous driving of instructions and communication

(1) Driving instructions at the same time

- Two or more inverter communication instructions can be programmed, and driven at the same time.
- When two or more instructions are driven at the same time for the serial port used for communication, the next inverter communication instruction in the program is executed after the current communication with the inverter has finished.

- Inverter communication instructions standby for 11 ms after acquiring a communication port, and then starts communication. Even if the drive contact turns ON, the inverter communication instruction stands by until (SM8920) turns ON→OFF when the SM8920 inverter communication busy flag has been turned ON by other inverter communication instruction. The PLC frees the communication port, and then executes inverter communication instructions driven in the next step and so on.

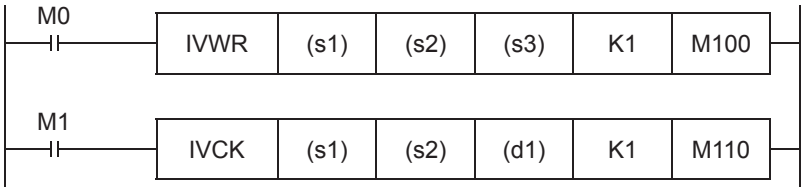

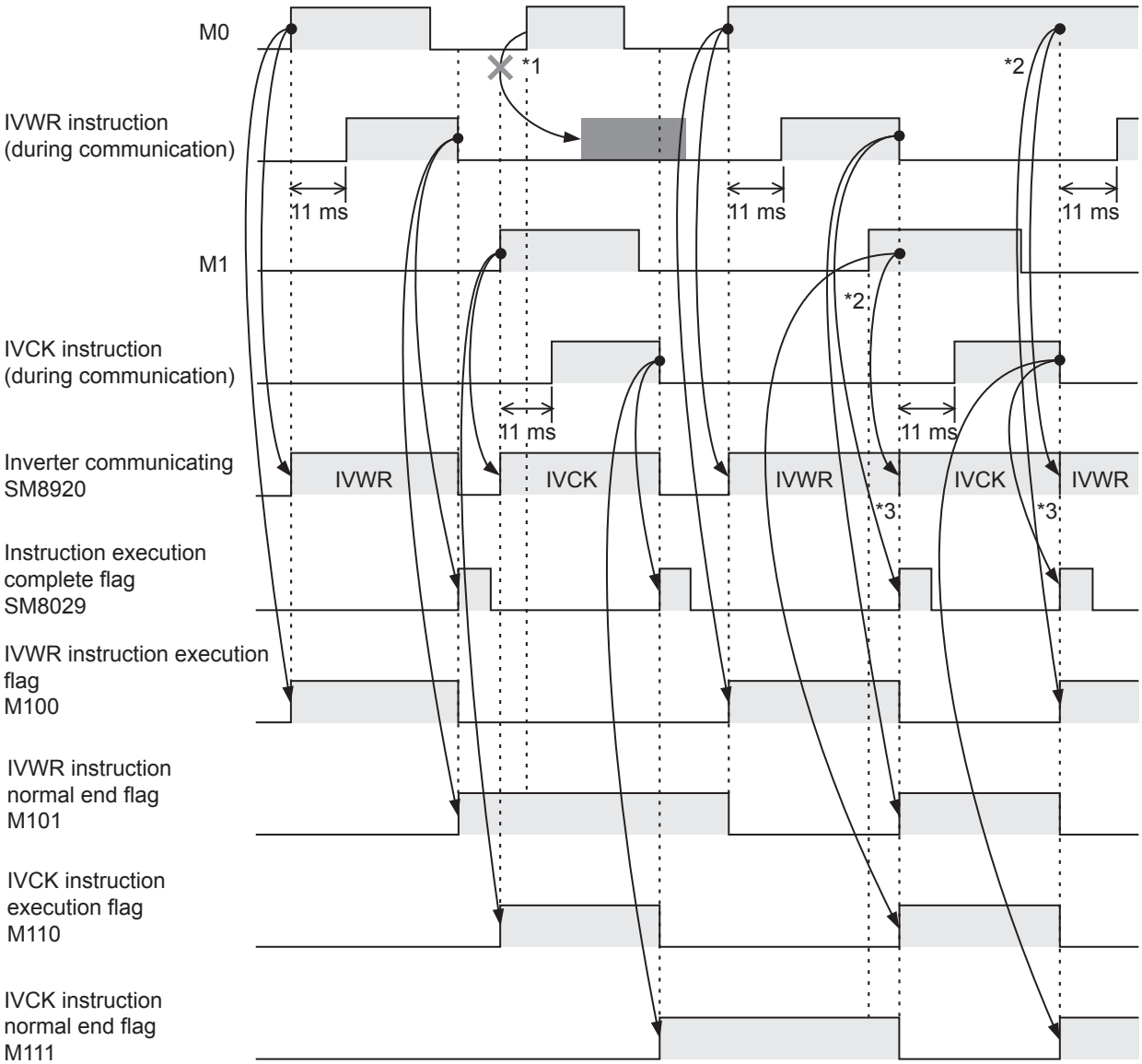

*1 The PLC does not execute the IVWR instruction even if SM8920 is turned OFF (IVWR instruction execution complete) because another instruction (IVCK instruction) is being executed when drive contact M1 turns ON.

*2 When two or more instructions are driven at the same time during communication, the next inverter communication instruction is executed after the current instruction is completed.

*3 SM8920 remains OFF until the next inverter communication instruction is driven after execution of the current inverter communication instruction is completed.

(2) Precautions for programming

When communicating with inverters for multiple items, set the command contact for inverter communication instruction to ON until transmission is complete. Program so that the command contact is turned OFF, when all communication with the inverter has been completed, using the instruction execution normal end flag ([d] +1 or [d2] +1), instruction execution abnormal end flag ([d] +2 or (d2) +2) or instruction execution completed flag (SM8029).

- If using instruction execution normal end flag ([d] +1 or [d2] +1) or instruction execution abnormal end flag ([d] +2 or [d2] +2)

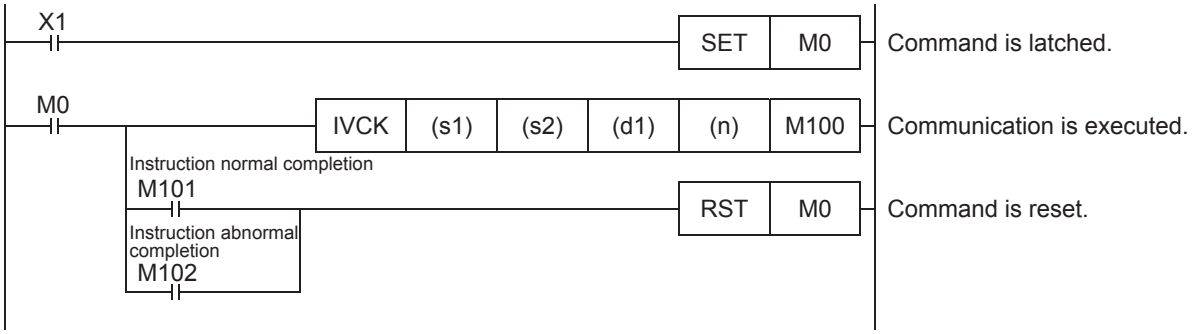

- When using instruction execution complete flag (M8029)

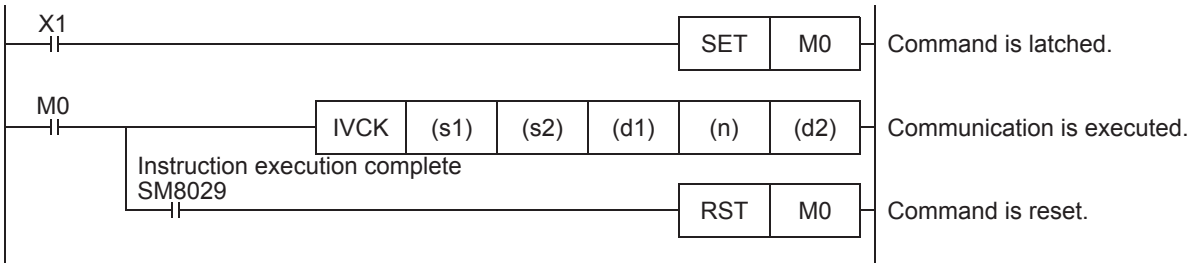

Instruction completion and error flag operation

When multiple inverter communication instructions are programmed, the following flags turn ON or OFF according to the execution result of each inverter communication instruction.

To acquire the result of each inverter communication instruction, program as necessary just below the inverter communication instruction using these flags.

■Related devices

- Special relays

FX5 dedicated				Description
CH1	CH2	CH3	CH4	
SM8029				Instruction execution completed
SM8500	SM8510	SM8520	SM8530	Serial communication error
SM8921	SM8931	SM8941	SM8951	IVBWR instruction error

- Special registers

FX5 dedicated				Description
CH1	CH2	CH3	CH4	
SD8500	SD8510	SD8520	SD8530	Serial communication error code
SD8920	SD8930	SD8940	SD8950	IVBWR instruction error parameter number

■Operation of instruction execution complete flag

When communication with an inverter is completed, the instruction execution completed flag (SM8029) turns ON, and remains ON for 1 scan.

SM8029 indicates completion of IVDR instruction communication as shown below, when M0, M2 are OFF and M1 is ON.

If inverter communication instruction ends normally, instruction execution normal end flag (☞ Page 121) turns ON simultaneously with SM8029.

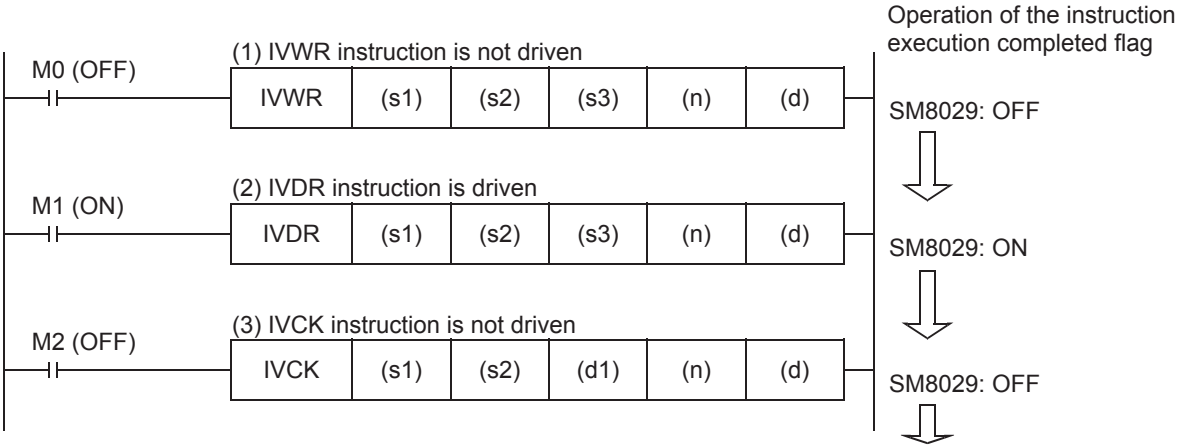

■Processing of communication errors

Communication errors include those that occur for all serial communication functions (parity error, overrun error, framing error) and those that occur during communication with the inverter. A serial communication error results if either occurs.

		CH1	CH2	CH3	CH4
Serial communication error	Device No.	SM8500	SM8510	SM8520	SM8530
	Operation	ON (ON maintained)			
Serial communication error code	Device No.	SD8500	SD8510	SD8520	SD8530
	Error code	7010H: Parity error, overrun error or framing error			
		76**H: Inverter communication error (☞ Page 145)			

You can create the following program for the corresponding instruction to check the inverter communication error code.

Program example

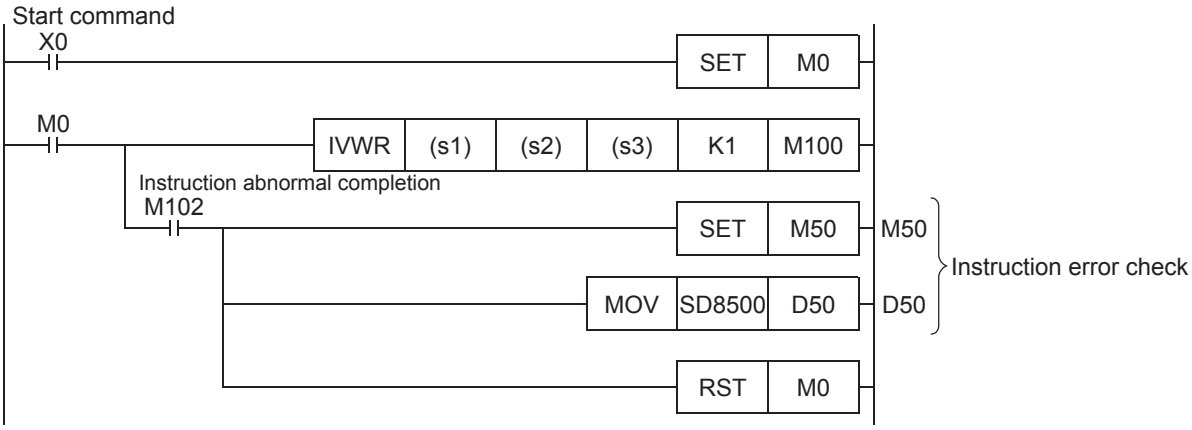

Precautions for program creation

■Communication protocol setting

If protocol of communication settings (☞ Page 118) for the serial port to be used is not set to "Inverter Communication," inverter communication instructions cannot be used.

■Using inverter communication instruction together with another instruction

A serial port using any other communication (such as RS2 instruction) cannot use inverter instruction and predefined protocol support instruction. (☞ Page 236 Combined Use of Serial Communication)

■When programming an inverter communication instruction in a state of an STL instruction

Do not turn state OFF until communication with the inverter is finished. Program in accordance with the following sequence.

- Add SM8029 (instruction execution complete flag) ON condition to the state relay transfer condition, and provide interlock such that the state relay ON/OFF status does not change during communication with an inverter. If the state changes during communication, communication may not be performed normally.
- When resetting many state relays at once using the ZRST instruction, etc., make sure that the SM8920, SM8930, SM8940 or SM8950 (Inverter communicating) condition is OFF.

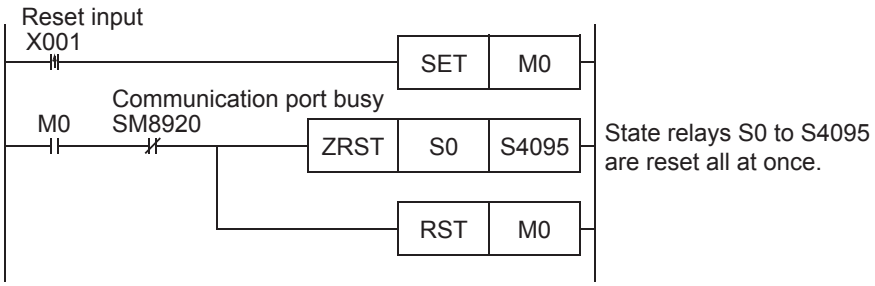

■Using an inverter communication instruction in a program flow

An inverter communication instruction cannot be used in the following program flows.

Program flow that cannot use the inverter communication instruction	Remarks
Between CJ and P instructions	Conditional jump
Between FOR and NEXT instructions	Repeat
Between P and RET instructions	Subroutine
Between I and IRET instructions	Interrupt routine

■Precautions when using the password function for inverter

Note the following if using the password function for the inverter. Inverters that support password function are FREQROL-F800, A800, F700PJ, F700P, A700, E700, E700EX and D700.

- When a communication error occurs

When a communication error occurs in an inverter communication instruction, the PLC automatically retries communication up to 3 times.*1

Hence, when a password disable error occurs in the inverter in which "display of the number of times of password disable error"*2 is enabled using Pr.297, please note that the number of times of password disable error displayed in accordance with the setting of Pr.297 may not be the same as the actual number of times of password input error as described below.

Do not execute automatic retry (re-driving of an inverter communication instruction) using a sequence program when writing data to Pr.297.

■Cases in which a password disable error occurs in an inverter communication instruction, and the actual number of times of disable error in such cases.

(1) If an incorrect password is written in Pr.297 due to a typing mistake, number of times of password disable error will be 3 from one execution of inverter instruction.

(2)If the password cannot be written in Pr.297 correctly due to noise, etc., the maximum number of times of password disable error is 3.

- When registering the password

When registering the password in the inverter using an inverter communication instruction, write the password to Pr.297, read Pr.297, and then confirm that registration of the password is completed normally.*3 If writing of the password to Pr.297 is not completed normally due to noise, etc., the PLC automatically retries writing, and the registered password may be reset by the retry.

*1 The PLC executes the first communication, and then retries communication twice (3 times in total).

*2 When "display of the number of times of password disable error" is enabled using Pr.297 and when a password disable error occurs 5 times, the "reading/writing restriction" cannot be disabled even if the right password is input. For recovery from this status, it is necessary to all-clear all parameters.

*3 If the value read from Pr.297 is between 0 to 4, registration of the password is completed normally.

Inverter operation monitoring instruction

This instruction reads the operation status of an inverter.

For information concerning inverter communication instruction expressions and execution format, refer to 📖MELSEC iQ-F FX5 Programming Manual (Instructions, Standard Functions/Function Blocks).

IVCK

Ladder	ST	FBD/LD
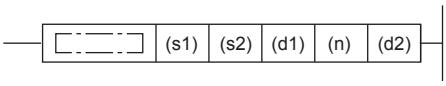	ENO:=IVCK (EN, s1, s2, n, d1, d2);	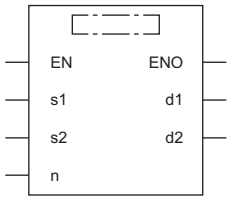

Setting data

■Contents, range, data type

Operand	Description	Range	Data type	Data type (label)
(s1)	Inverter station number	K0 to 31	16-bit signed binary	ANY16
(s2)	Inverter instruction codes	Refer to ☞ Page 94	16-bit signed binary	ANY16
(d1)	Device number storing the read value	—	16-bit signed binary	ANY16
(n)*1	Used channel	K1 to 4	16-bit unsigned binary	ANY16_U
(d2)*2	Head bit device number to which instruction execution status is output	—	Bit	ANYBIT_ARRAY (Number of elements:3)

*1 Specify a channel No. for which communication setting is set for inverter communication.

*2 Make sure not to use devices being used in other control operations. (☞ Page 121)

■Applicable devices

Operand	Bit	Word			Double word		Indirect specification	Constant			Others
	X, Y, M, L, SM, F, B, SB, S	T, ST, C, D, W, SD, SW, R	U□\G□	Z	LC	LZ		K, H	E	$	
(s1)	—	○*1	○	○	—	—	○	○	—	—	—
(s2)	—	○*1	○	○	—	—	○	○	—	—	—
(d1)	○	○	○	—	—	—	○	—	—	—	—
(n)	—	—	—	—	—	—	—	○	—	—	—
(d2)	○	○*1	—	—	—	—	—	—	—	—	—

*1 T,ST and C cannot be used

Processing details

Write the operation status of inverter corresponding to instruction code (☞ Page 94) of (s2) for station No. (s1) of the inverter connected to the communication channel (n) in (d1).

Operation error

Operation errors pertaining to the instruction are as follows.

Operation Error Flag				Operation Error Codes		Description
SM0	SM1	SM56	SM8067	SD0	SD8067	
ON				1810H		When specified channel is used with another instruction.
ON				2820H		When specified device exceeds the device range.
ON				3405H		When the value specified for (s1) is other than K0 to 31.
						When the value specified for (n) is other than K1 to 4.
ON				3600H		When specified channel is not set with parameter.

Program example

Reads status (H7A) of inverter (station No. 0) into PLC (CH1), stores the read value in M100 to M107 and outputs externally (Y0 to Y3).

Read contents: Inverter operating = M100, normal rotation = M101, reverse rotation = M102, error occurrence = M107

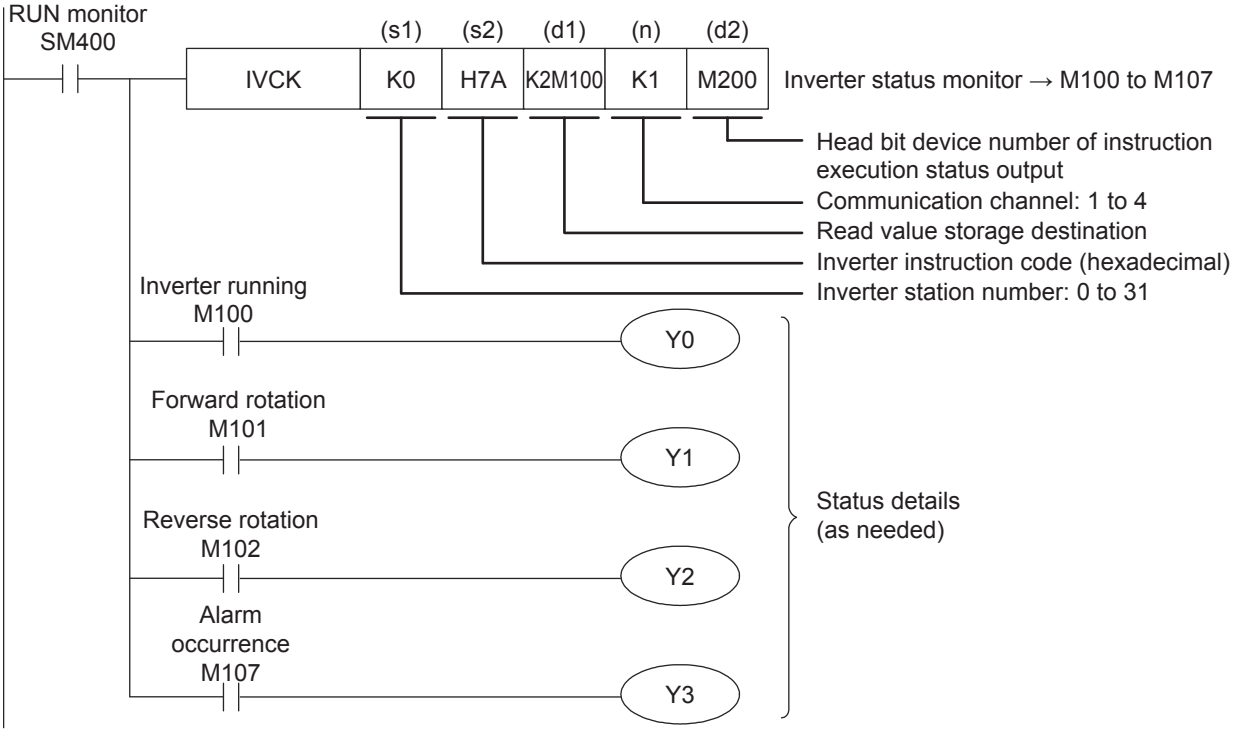

Inverter operation control instruction

This instruction writes an inverter operation required set value to an inverter.
For information concerning inverter communication instruction expressions and execution format, refer to 📖MELSEC iQ-F FX5 Programming Manual (Instructions, Standard Functions/Function Blocks).

IVDR

Ladder	ST	FBD/LD
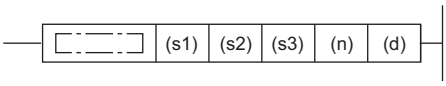	ENO:=IVDR (EN, s1, s2, s3, n, d);	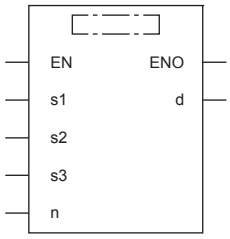

Setting data

■Contents, range, data type

Operand	Description	Range	Data type	Data type (label)
(s1)	Inverter station number	K0 to 31	16-bit signed binary	ANY16
(s2)	Inverter instruction codes	Refer to ☞ Page 95.	16-bit signed binary	ANY16
(s3)	Set value to be written to the inverter parameter or device number storing the data to be set	—	16-bit signed binary	ANY16
(n)*1	Used channel	K1 to 4	16-bit unsigned binary	ANY16_U
(d)*2	Bit device head number to which instruction execution status is output	—	Bit	ANYBIT_ARRAY (Number of elements:3)

*1 Specify a channel No. for which communication setting is set for inverter communication.
*2 Make sure not to use devices being used in other control operations. (☞ Page 121)

■Applicable devices

Operand	Bit	Word			Double word		Indirect specification	Constant			Others
	X, Y, M, L, SM, F, B, SB, S	T, ST, C, D, W, SD, SW, R	U□\G□	Z	LC	LZ		K, H	E	$	
(s1)	—	○*1	○	○	—	—	○	○	—	—	—
(s2)	—	○*1	○	○	—	—	○	○	—	—	—
(s3)	○	○	○	—	—	—	○	○	—	—	—
(n)	—	—	—	—	—	—	—	○	—	—	—
(d)	○	○*1	—	—	—	—	—	—	—	—	—

*1 T,ST and C cannot be used

Processing details

Writes set value of (s3) to the instruction code (☞ Page 95) of (s2) for station No. (s1) of the inverter connected to the communication channel (n).

Operation error

Operation errors pertaining to the instruction are as follows.

Operation Error Flag				Operation Error Codes		Description
SM0	SM1	SM56	SM8067	SD0	SD8067	
ON				1810H		When specified channel is used with another instruction.
ON				2820H		When specified device exceeds the device range.
ON				3405H		When the value specified for (s1) is other than K0 to 31.
						When the value specified for (n) is other than K1 to 4.
ON				3600H		When specified channel is not setting parameter.

Program example

Switches the operation speed (HED) of the inverter (Station No.3) to speed 1 (40 Hz)/speed 2 (20 Hz) with 60 Hz as the initial value on startup.

Writing contents: D10 = operation speed (initial value: 60 Hz, speed 1: 40 Hz, speed 2: 20 Hz)

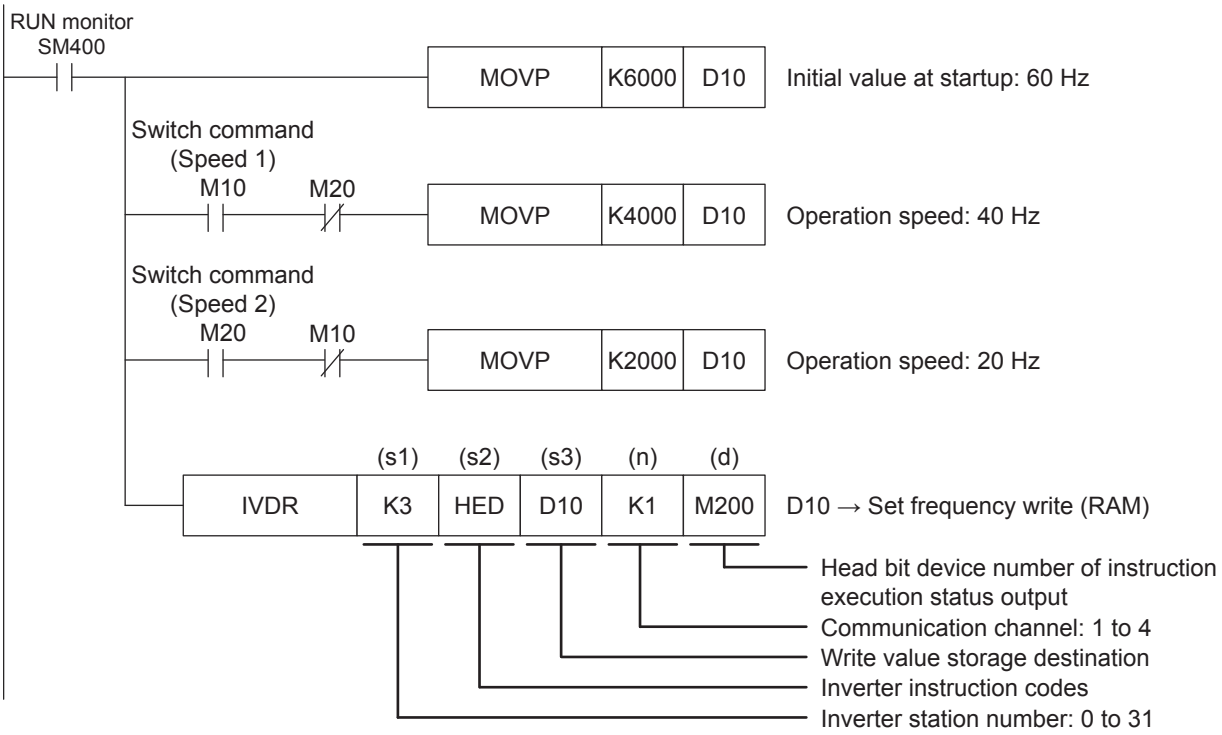

Inverter parameter read

This instruction reads an inverter parameter to the PLC.

For information concerning inverter communication instruction expressions and execution format, refer to 📖MELSEC iQ-F FX5 Programming Manual (Instructions, Standard Functions/Function Blocks).

IVRD

Ladder	ST	FBD/LD
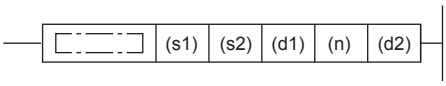	ENO:=IVRD (EN, s1, s2, n, d1, d2);	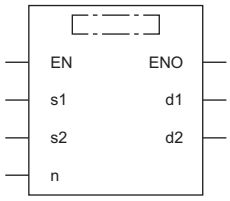

Setting data

■Contents, range, data type

Operand	Description	Range	Data type	Data type (label)
(s1)	Inverter station number	K0 to 31	16-bit signed binary	ANY16
(s2)	Inverter parameter number	Refer to ☞ Page 95.	16-bit signed binary	ANY16
(d1)	Device number storing the read value	—	16-bit signed binary	ANY16
(n)*1	Used channel	K1 to 4	16-bit unsigned binary	ANY16_U
(d2)*2	Bit device head number to which instruction execution status is output	—	Bit	ANYBIT_ARRAY (Number of elements:3)

*1 Specify a channel No. for which communication setting is set for inverter communication.

*2 Make sure not to use devices being used in other control operations. (☞ Page 121)

■Applicable devices

Operand	Bit	Word			Double word		Indirect specification	Constant			Others
	X, Y, M, L, SM, F, B, SB, S	T, ST, C, D, W, SD, SW, R	U□\G□	Z	LC	LZ		K, H	E	$	
(s1)	—	○*1	○	○	—	—	○	○	—	—	—
(s2)	—	○*1	○	○	—	—	○	○	—	—	—
(d1)	○	○	○	—	—	—	○	—	—	—	—
(n)	—	—	—	—	—	—	—	○	—	—	—
(d2)	○	○*1	—	—	—	—	—	—	—	—	—

*1 T,ST and C cannot be used

Processing details

The value of the parameter No. (s2) is read to (d1) from station No. (s1) of inverter connected to communication channel (n).

Operation error

Operation errors pertaining to the instruction are as follows.

Operation Error Flag				Operation Error Codes		Description
SM0	SM1	SM56	SM8067	SD0	SD8067	
ON				1810H		When specified channel is used with another instruction.
ON				2820H		When specified device exceeds the device range.
ON				3405H		When the value specified for (s1) is other than K0 to 31.
						When the value specified for (s2) is outside the range that can be specified. (Less than K0, K3000 to 9999, K13000 to 32767)
						When the value specified for (n) is other than K1 to 4.
ON				3600H		When specified channel is not setting parameter.

Program example

Reads value of the following inverter (station No. 6) parameters to storage device for PLC (CH1).

Example of program using second parameter specification code (☞ Page 140) of FREQROL-F700P Series inverter.

Parameter No.	Name	Second parameter specification code	Storage devices
C2	Terminal 2 frequency setting bias frequency	902	D100
C3	Terminal 2 frequency setting bias	1902	D101
125	Terminal 2 frequency setting gain frequency	903	D102
C4	Terminal 2 frequency setting gain	1903	D103

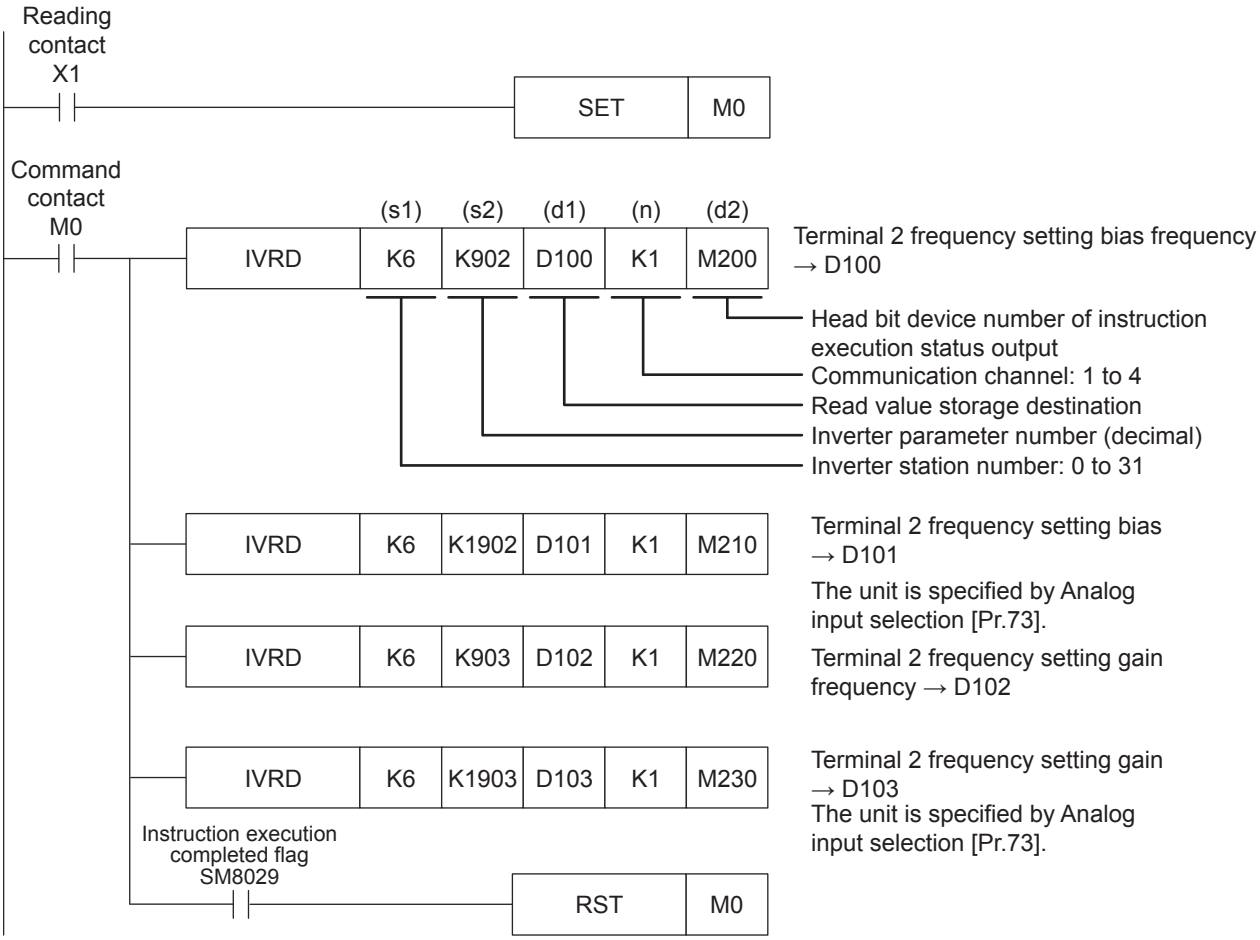

Inverter parameter write

This instruction writes a value from the PLC to a parameter in an inverter.

For information concerning inverter communication instruction expressions and execution format, refer to 📖MELSEC iQ-F FX5 Programming Manual (Instructions, Standard Functions/Function Blocks).

IVWR

Ladder	ST	FBD/LD
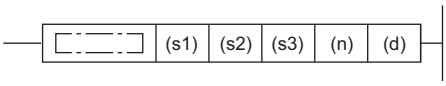	ENO:=IVWR (EN, s1, s2, s3, n, d);	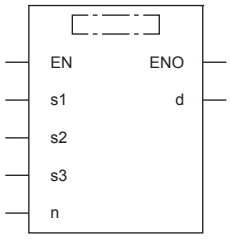

Setting data

■Contents, range, data type

Operand	Description	Range	Data type	Data type (label)
(s1)	Inverter station number	K0 to 31	16-bit signed binary	ANY16
(s2)	Inverter parameter number	Refer to ☞ Page 95	16-bit signed binary	ANY16
(s3)	Set value to be written to the inverter parameter or device number storing the data to be set	—	16-bit signed binary	ANY16
(n)*1	Used channel	K1 to 4	16-bit unsigned binary	ANY16_U
(d)*2	Bit device head number to which instruction execution status is output	—	Bit	ANYBIT_ARRAY (Number of elements:3)

*1 Specify a channel No. for which communication setting is set for inverter communication.

*2 Make sure not to use devices being used in other control operations. (☞ Page 121)

■Applicable devices

Operand	Bit	Word			Double word		Indirect specification	Constant			Others
	X, Y, M, L, SM, F, B, SB, S	T, ST, C, D, W, SD, SW, R	U□\G□	Z	LC	LZ		K, H	E	$	
(s1)	—	○*1	○	○	—	—	○	○	—	—	—
(s2)	—	○*1	○	○	—	—	○	○	—	—	—
(s3)	○	○	○	—	—	—	○	○	—	—	—
(n)	—	—	—	—	—	—	—	○	—	—	—
(d)	○	○*1	—	—	—	—	—	—	—	—	—

*1 T,ST and C cannot be used

Processing details

Writes value of (s3) in parameter No. (s2) of station No. (s1) of inverter connected to communication channel (n).

Operation error

Operation errors pertaining to the instruction are as follows.

Operation Error Flag				Operation Error Codes		Description
SM0	SM1	SM56	SM8067	SD0	SD8067	
ON				1810H		When specified channel is used with another instruction.
ON				2820H		When specified device exceeds the device range.
ON				3405H		When the value specified for (s1) is other than K0 to 31.
						When the value specified for (s2) is outside the range that can be specified. (Less than K0, K3000 to 9999, K13000 to 32767)
						When the value specified for (n) is other than K1 to 4.
ON				3600H		When specified channel is not setting parameter.

Program example

Writes setting values to parameter shown in the following table for inverter (station No. 6) from PLC (CH1).

Example of program using second parameter specification code (☞ Page 140) of FREQROL-F700P Series inverter.

Parameter No.	Name	Second parameter specification code	Setting values to be written
C2	Terminal 2 frequency setting bias frequency	902	10[Hz]
C3	Terminal 2 frequency setting bias	1902	100[%]
125	Terminal 2 frequency setting gain frequency	903	200[Hz]
C4	Terminal 2 frequency setting gain	1903	100[%]

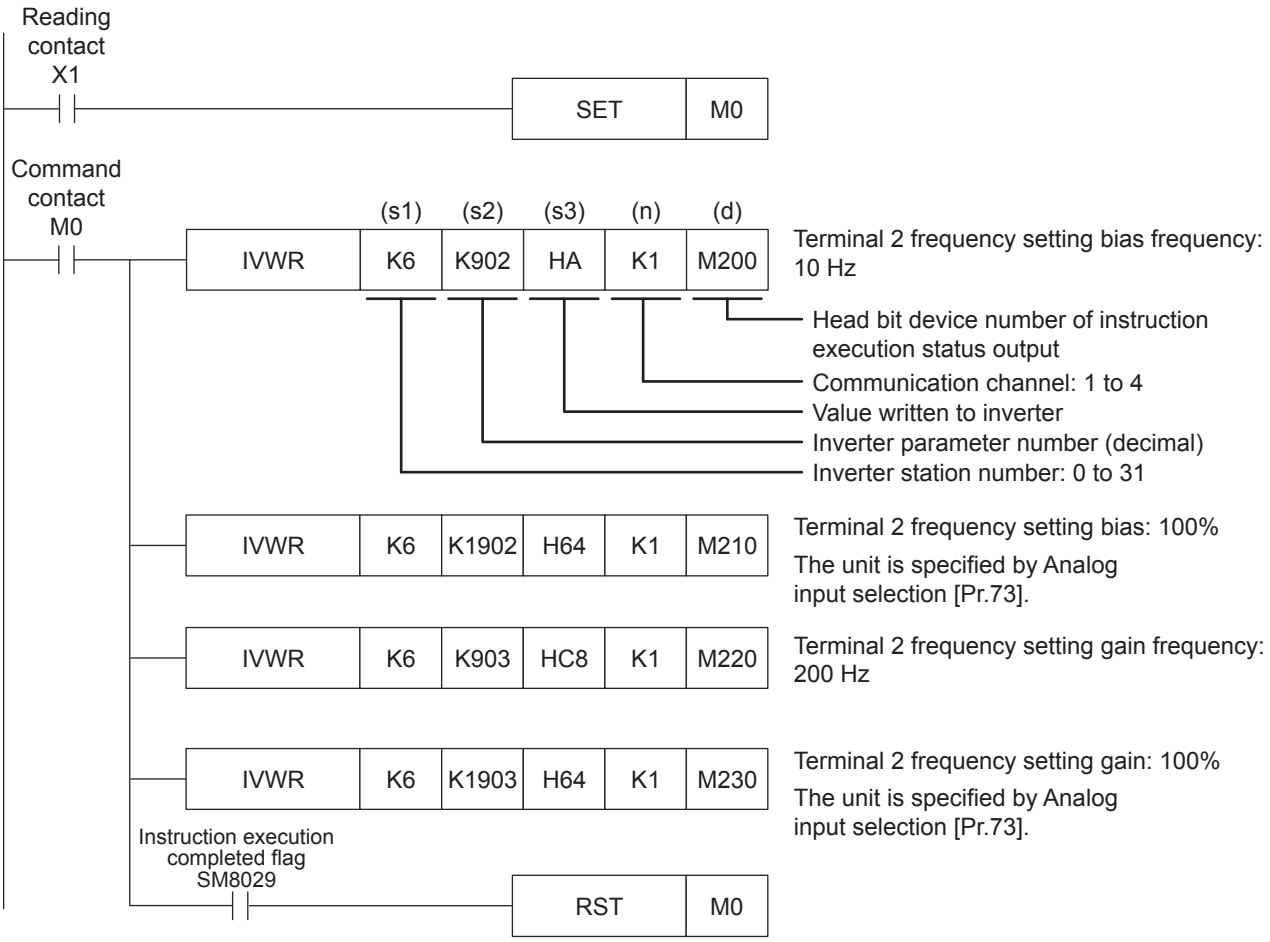

Inverter parameter block write

This instruction writes parameters of an inverter at one time

For information concerning inverter communication instruction expressions and execution format, refer to 📖MELSEC iQ-F FX5 Programming Manual (Instructions, Standard Functions/Function Blocks).

IVBWR

Ladder	ST	FBD/LD
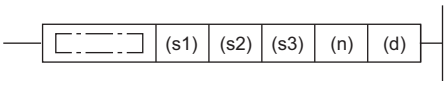	ENO:=IVBWR (EN, s1, s2, s3, n, d);	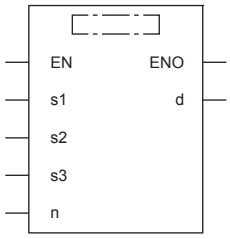

Setting data

■Contents, range, data type

Operand	Description	Range	Data type	Data type (label)
(s1)	Inverter station number	K0 to 31	16-bit signed binary	ANY16
(s2)	Number of parameters in an inverter to be written at one time	—	16-bit signed binary	ANY16
(s3)	Head device number of a parameter table to be written to an inverter	—	16-bit signed binary	ANY16
(n)*1	Used channel	K1 to 4	16-bit unsigned binary	ANY16_U
(d)*2	Head bit device number to which instruction execution status is output	—	Bit	ANYBIT_ARRAY (Number of elements:3)

*1 Specify a channel No. for which communication setting is set for inverter communication.

*2 Make sure not to use devices being used in other control operations. (☞ Page 121)

■Applicable devices

Operand	Bit	Word			Double word		Indirect specification	Constant			Others
	X, Y, M, L, SM, F, B, SB, S	T, ST, C, D, W, SD, SW, R	U□\G□	Z	LC	LZ		K, H	E	$	
(s1)	—	○*1	○	○	—	—	○	○	—	—	—
(s2)	—	○*1	○	○	—	—	○	○	—	—	—
(s3)	—	○	○	—	—	—	○	—	—	—	—
(n)	—	—	—	—	—	—	—	○	—	—	—
(d)	○	○*1	—	—	—	—	—	—	—	—	—

*1 T,ST and C cannot be used

Ex.

Writing contents in case of (s2): K8, (s3): D200

(s3)	D200	Parameter No. 1
(s3)+1	D201	Parameter 1 value
(s3)+2	D202	Parameter No. 2
(s3)+3	D203	Parameter 2 value
⋮	⋮	⋮
(s3)+14	D214	Parameter No. 8
(s3)+15	D215	Parameter 8 value

(s2)×2 = Number of occupied word devices

Processing details

Continuously writes parameter numbers and their values (2 words/parameter) for the number of points specified by (s2) starting from word device specified by (s3) for station No. (s1) of inverter connected to communication channel (n) (no limit to number of points that can be written).

Operation error

Operation errors pertaining to the instruction are as follows.

Operation Error Flag				Operation Error Codes		Description
SM0	SM1	SM56	SM8067	SD0	SD8067	
ON				1810H		When specified channel is used with another instruction.
ON				2820H		When specified device exceeds the device range.
ON				3405H		When the value specified for (s1) is other than K0 to 31.
						When the value specified for (s2) is less than K0.
						When the value specified for (s3), ..., (s3) +2 ([s2] -1) is outside the range that can be specified. (Less than K0, K3000 to 9999, K13000 to 32767)
						When the value specified for (n) is other than K1 to 4.
ON				3600H		When specified channel is not setting parameter.

Program example

Writes upper limit frequency (Pr. 1): 120 Hz, lower limit frequency (Pr. 2): 5 Hz, acceleration time (Pr. 7): 1 second, deceleration time (Pr. 8): 1 second for inverter (station No. 5) from PLC (CH1).

Writing contents: Parameter No. 1 = D200, 2 = D202, 7 = D204, 8 = D206, upper limit frequency = D201, lower limit frequency = D203, acceleration time = D205, deceleration time = D207

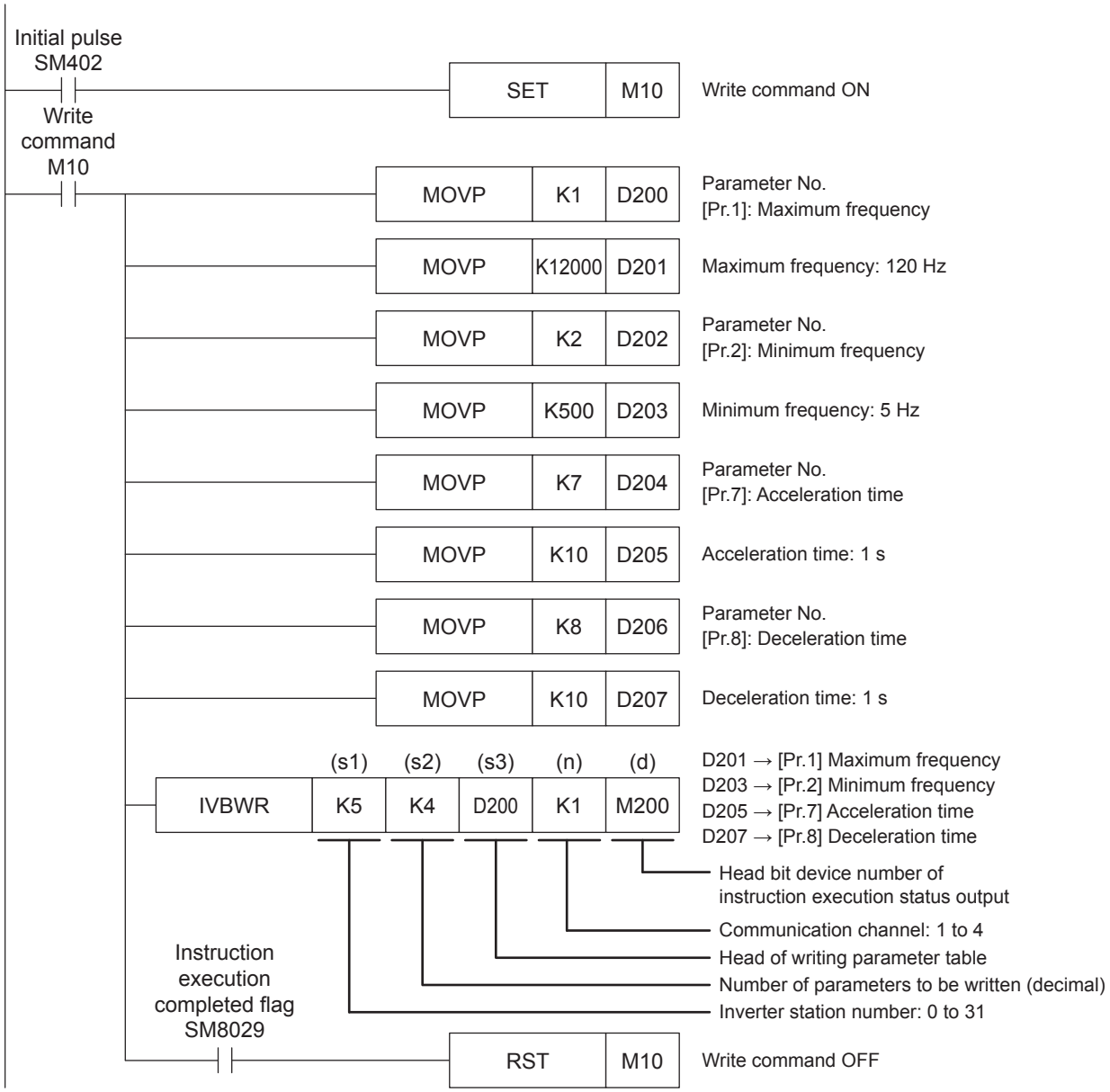

Multiple inverter commands

This instruction writes 2 types of settings (operation command and set frequency) to the inverter, and reads 2 types of data (inverter status monitor, output frequency, etc.) from the inverter at the same time.
For information concerning inverter communication instruction expressions and execution format, refer to 📖MELSEC iQ-F FX5 Programming Manual (Instructions, Standard Functions/Function Blocks).

IVMC

Ladder	ST	FBD/LD
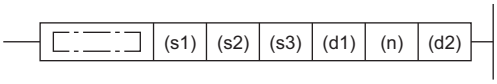	ENO:=IVMC (EN, s1, s2, s3, n, d1, d2);	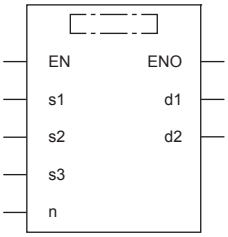

Setting data

■Contents, range, data type

Operand	Description	Range	Data type	Data type (label)
(s1)	Inverter station number	K0 to 31	16-bit signed binary	ANY16
(s2)	Multiple instructions for inverter: Send/receive data type specification	Refer to the following	16-bit signed binary	ANY16
(s3)	Head device of a parameter data to be written to an inverter	—	16-bit signed binary	ANY16_ARRAY (Number of elements:2)
(d1)	Head device which stores values to be read from the inverter	—	16-bit signed binary	ANY16_ARRAY (Number of elements:2)
(n)*1	Used channel	K1 to 4	16-bit unsigned binary	ANY16_U
(d2)*2	Head bit device number to which instruction execution status is output	—	Bit	ANYBIT_ARRAY (Number of elements:3)

*1 Specify a channel No. for which communication setting is set for inverter communication.
*2 Make sure not to use devices being used in other control operations. (☞ Page 121)

■Applicable devices

Operand	Bit	Word			Double word		Indirect specification	Constant			Others
	X, Y, M, L, SM, F, B, SB, S	T, ST, C, D, W, SD, SW, R	U□\G□	Z	LC	LZ		K, H	E	$	
(s1)	—	○*1	○	○	—	—	○	○	—	—	—
(s2)	—	○*1	○	○	—	—	○	○	—	—	—
(s3)	—	○	○	—	—	—	○	—	—	—	—
(d1)	—	○	○	—	—	—	○	—	—	—	—
(n)	—	—	—	—	—	—	—	○	—	—	—
(d2)	○	○*1	—	—	—	—	—	—	—	—	—

*1 T,ST and C cannot be used

Processing details

This instruction executes multiple commands to an inverter connected to the communication channel (n) whose station number is specified in (s1). Specify the send/receive data type using (s2), the head device which stores data to be written to the inverter using (s3), and the head device which stores values to be read from the inverter using (d1).

■Send/receive data type

The table below shows valid send data 1 and 2 and receive data 1 and 2 specified by the (s2) send/receive data type.

(s2) Send/receive data type (HEX)	Send data (Written to the Inverter)		Receive data (Read from Inverter)	
	Data 1 (s3)	Data 2 ([s3] +1)	Data 1 (d1)	Data 2 ([d1] +1)
0000H	Run command (expansion)	Set frequency (RAM)	Inverter status monitor (expansion)	Output frequency (speed)
0001H				Special monitor
0010H		Set frequency (RAM, EEPROM)		Output frequency (speed)
0011H				Special monitor

Precautions

- If a device number outside the range due to indexing, etc. is specified in (d1), the receive data from the inverter is not stored in (d1). However, values set in (s3) and (s3)+1 may be written to the inverter.
- If any unspecified value is set in (s2), unexpected data may be written to and read from the inverter, and values of (d1) and (d1)+1 may be updated.
- The IVMC instruction reads the inverter status at the time of communication with the inverter, and stores it in (d1). Accordingly, the inverter status written by the IVMC instruction can be read when the next reading instruction (IVCK, IVMC, etc.) is executed.

Operation error

Operation errors pertaining to the instruction are as follows.

Operation Error Flag				Operation Error Codes		Description
SM0	SM1	SM56	SM8067	SD0	SD8067	
ON				1810H		When specified channel is used with another instruction.
ON				2820H		When specified device exceeds the device range.
ON				3405H		When the value specified for (s1) is other than K0 to 31.
						When the value specified for (n) is other than K1 to 4.
ON				3600H		When specified channel is not setting parameter.

Applicable inverters

This instruction is applicable to the following inverters:

- FREQROL-E700 series (February 2009 and later)
- FREQROL-F800/A800/F700PJ/F700P/E700EX/D700 Series

Program example

Writes (s3): run command (expansion), (s3) +1: setting frequency (RAM) and reads (d1): inverter status monitor (expansion), (d1) +1: output frequency (rotation speed) for inverter (station No. 0) from FX5 PLC (CH1).

Send/receive type code: H0000

- (s3): Run command (expansion)

Runs inverter in forward or reverse by forward rotation command (M21)/reverse rotation command (M22).

Writing contents: D10 = run command (M21 = forward rotation, M22 = reverse rotation)

- (s3) +1: Set frequency (RAM)

Switches speed 1 (40 Hz)/speed 2 (20 Hz) with 60 Hz as the initial value when starting up.

Writing contents: D11 = operation speed (initial value: 60 Hz, speed 1: 40 Hz, speed 2: 20 Hz)

- (d1): Inverter status monitor (expansion)

Stores read value in M100 - M115 and outputs externally (Y0 to Y3).

Read contents: D20 = inverter monitor (expansion) (inverter running = M100, forward rotation = M101, reverse rotation = M102, error = M115)

- (d1)+1: Output frequency (speed)

Reads output frequency (rotation speed).

Read contents: D21 = Output frequency (rotation speed)

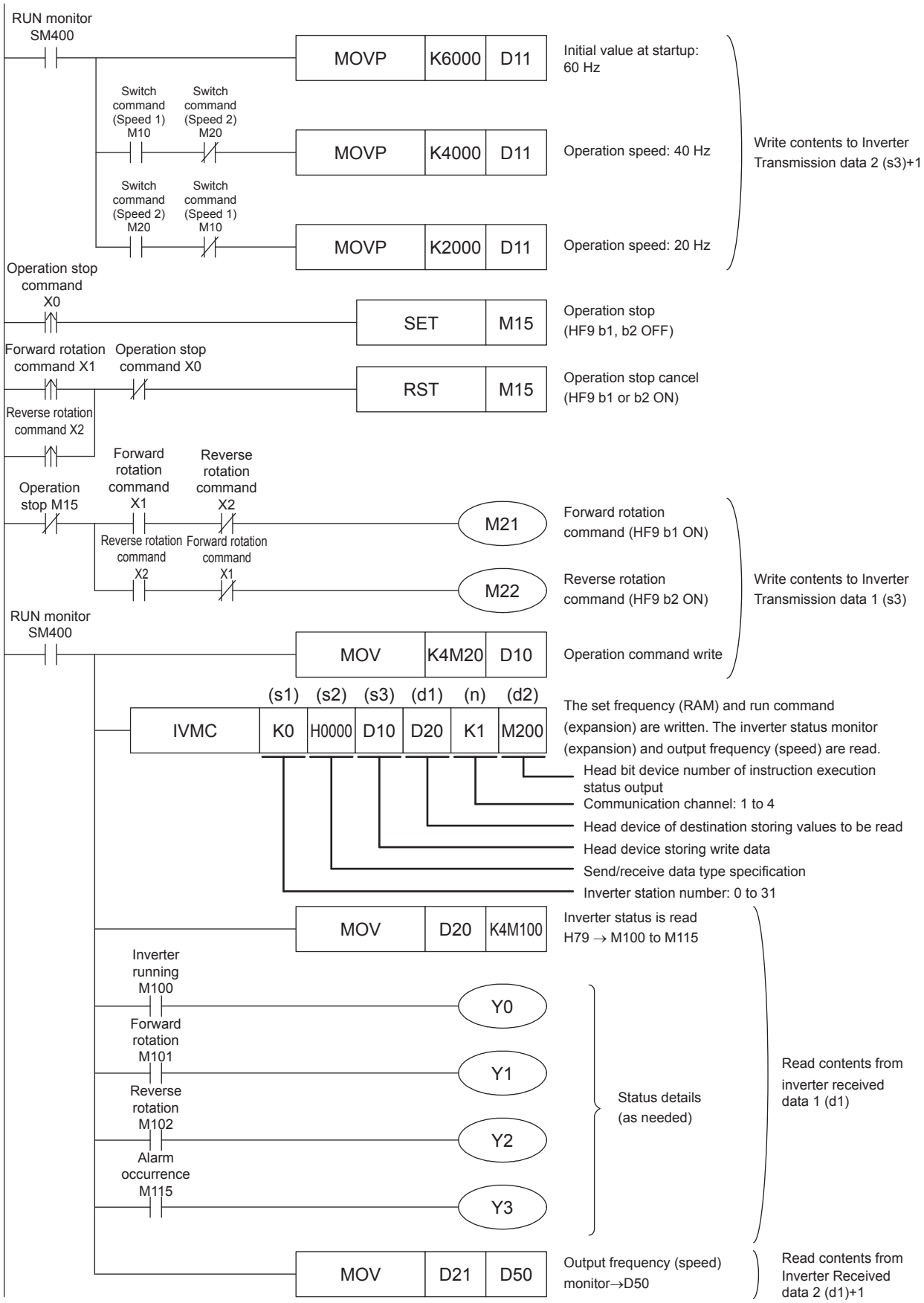
RUN monitor
SM400
MOVP K6000 D11
Initial value at startup: 60 Hz
Switch command (Speed 1) M10
Switch command (Speed 2) M20
MOVP K4000 D11
Operation speed: 40 Hz
Switch command (Speed 2) M20
Switch command (Speed 1) M10
MOVP K2000 D11
Operation speed: 20 Hz
Write contents to Inverter Transmission data 2 (s3)+1
Operation stop command X0
SET M15
Operation stop (HF9 b1, b2 OFF)
Forward rotation command X1
Operation stop command X0
RST M15
Operation stop cancel (HF9 b1 or b2 ON)
Reverse rotation command X2
Operation stop M15
Forward rotation command X1
Reverse rotation command X2
M21
Forward rotation command (HF9 b1 ON)
Reverse rotation command X2
Forward rotation command X1
M22
Reverse rotation command (HF9 b2 ON)
Write contents to Inverter Transmission data 1 (s3)
RUN monitor
SM400
MOV K4M20 D10
Operation command write
(s1) (s2) (s3) (d1) (n) (d2)
IVMC K0 H0000 D10 D20 K1 M200
The set frequency (RAM) and run command (expansion) are written. The inverter status monitor (expansion) and output frequency (speed) are read.
Head bit device number of instruction execution status output
Communication channel: 1 to 4
Head device of destination storing values to be read
Head device storing write data
Send/receive data type specification
Inverter station number: 0 to 31
MOV D20 K4M100
Inverter status is read
H79 → M100 to M115
Inverter running M100
Y0
Forward rotation M101
Y1
Reverse rotation M102
Y2
Alarm occurrence M115
Y3
Status details (as needed)
Read contents from inverter received data 1 (d1)
MOV D21 D50
Output frequency (speed) monitor→D50
Read contents from Inverter Received data 2 (d1)+1

Second parameter specification code

When handling the following parameters in inverter communication, it is necessary to select second parameters. In IVRD, IVWR, and IVBWR instructions, when a value shown in the tables below is set in (s2) ((s3) in IVBWR instruction), the extension parameter and second parameter are automatically overwritten, and parameter values are either read or written. For details concerning inverter parameters, refer to the manual for each particular inverter.

FREQROL-F800 series

Second parameter specification codes for parameter numbers Pr.125, Pr.126, C2 to C19 and C38 to C41

Parameter No.	Name	Second parameter specification code
C2	Terminal 2 frequency setting bias frequency	902
C3	Terminal 2 frequency setting bias	1902
125	Terminal 2 frequency setting gain frequency	903
C4	Terminal 2 frequency setting gain	1903
C5	Terminal 4 frequency setting bias frequency	904
C6	Terminal 4 frequency setting bias	1904
126	Terminal 4 frequency setting gain frequency	905
C7	Terminal 4 frequency setting gain	1905
C12	Bias frequency (speed) for terminal No. 1	917
C13	Bias (speed) for terminal No. 1	1917
C14	Gain frequency (speed) for terminal No. 1	918
C15	Gain (speed) for terminal No. 1	1918
C16	Bias command (torque) for terminal No. 1	919
C17	Bias (torque) for terminal No. 1	1919
C18	Gain command (torque) for terminal No. 1	920
C19	Gain (torque) for terminal No. 1	1920
C8	Current output bias signal	930
C9	Current output bias current	1930
C10	Current output gain signal	931
C11	Current output gain current	1931
C38	Bias command (torque) for terminal No. 4	932
C39	Bias (torque) for terminal No. 4	1932
C40	Gain command (torque) for terminal No. 4	933
C41	Gain (torque) for terminal No. 4	1933
C42	PID display bias coefficient	934
C43	PID display bias analog value	1934
C44	PID display gain coefficient	935
C45	PID display gain analog value	1935

FREQROL-A800 series

Second parameter specification codes for parameter numbers Pr.125, Pr.126, C2 to C19 and C38 to C41

Parameter No.	Name	Second parameter specification code
C2	Terminal 2 frequency setting bias frequency	902
C3	Terminal 2 frequency setting bias	1902
125	Terminal 2 frequency setting gain frequency	903
C4	Terminal 2 frequency setting gain	1903
C5	Terminal 4 frequency setting bias frequency	904
C6	Terminal 4 frequency setting bias	1904
126	Terminal 4 frequency setting gain frequency	905
C7	Terminal 4 frequency setting gain	1905
C12	Bias frequency (speed) for terminal No. 1	917

Parameter No.	Name	Second parameter specification code
C13	Bias (speed) for terminal No. 1	1917
C14	Gain frequency (speed) for terminal No. 1	918
C15	Gain (speed) for terminal No. 1	1918
C16	Bias command (torque/magnetic flux) for terminal No. 1	919
C17	Bias (torque/magnetic flux) for terminal No. 1	1919
C18	Gain command (torque/magnetic flux) for terminal No. 1	920
C19	Gain (torque/magnetic flux) for terminal No. 1	1920
C8	Current output bias signal	930
C9	Current output bias current	1930
C10	Current output gain signal	931
C11	Current output gain current	1931
C38	Bias command (torque/magnetic flux) for terminal No. 4	932
C39	Bias (torque/magnetic flux) for terminal No. 4	1932
C40	Gain command (torque/magnetic flux) for terminal No. 4	933
C41	Gain (torque/magnetic flux) for terminal No. 4	1933
C42	PID display bias coefficient	934
C43	PID display bias analog value	1934
C44	PID display gain coefficient	935
C45	PID display gain analog value	1935

FREQROL-F700P series

Second parameter specification codes for parameter numbers Pr.125, Pr.126 and C2 to C7

Parameter No.	Name	Second parameter specification code
C2	Terminal 2 frequency setting bias frequency	902
C3	Terminal 2 frequency setting bias	1902
125	Terminal 2 frequency setting gain frequency	903
C4	Terminal 2 frequency setting gain	1903
C5	Terminal 4 frequency setting bias frequency	904
C6	Terminal 4 frequency setting bias	1904
126	Terminal 4 frequency setting gain frequency	905
C7	Terminal 4 frequency setting gain	1905
C42	PID display bias coefficient	934
C43	PID display bias analog value	1934
C44	PID display gain coefficient	935
C45	PID display gain analog value	1935

FREQROL-A700 series

Second parameter specification codes for parameter numbers Pr.125, Pr.126, C2 to C7, C12 to C19 and C38 to C41

Parameter No.	Name	Second parameter specification code
C2	Terminal 2 frequency setting bias frequency	902
C3	Terminal 2 frequency setting bias	1902
125	Terminal 2 frequency setting gain frequency	903
C4	Terminal 2 frequency setting gain	1903
C5	Terminal 4 frequency setting bias frequency	904
C6	Terminal 4 frequency setting bias	1904
126	Terminal 4 frequency setting gain frequency	905

Parameter No.	Name	Second parameter specification code
C7	Terminal 4 frequency setting gain	1905
C12	Bias frequency (speed) for terminal No. 1	917
C13	Bias (speed) for terminal No. 1	1917
C14	Gain frequency (speed) for terminal No. 1	918
C15	Gain (speed) for terminal No. 1	1918
C16	Bias command (torque/magnetic flux) for terminal No. 1	919
C17	Bias (torque/magnetic flux) for terminal No. 1	1919
C18	Gain command (torque/magnetic flux) for terminal No. 1	920
C19	Gain (torque/magnetic flux) for terminal No. 1	1920
C30	Terminal 6 bias frequency (speed)	926
C31	Terminal 6 bias (speed)	1926
C32	Terminal 6 gain frequency (speed)	927
C33	Terminal 6 gain (speed)	1927
C34	Terminal 6 bias command (torque)	928
C35	Terminal 6 bias (torque)	1928
C36	Terminal 6 gain command (torque)	929
C37	Terminal 6 gain (torque)	1929
C38	Bias command (torque/magnetic flux) for terminal No. 4	932
C39	Bias (torque/magnetic flux) for terminal No. 4	1932
C40	Gain command (torque/magnetic flux) for terminal No. 4	933
C41	Gain (torque/magnetic flux) for terminal No. 4	1933

FREQROL-F700PJ/E700/E700EX/D700 series

Second parameter specification codes for parameter numbers Pr.125, Pr.126, C2 to C7 and C22 to C25

Parameter No.	Name	Second parameter specification code
C2	Terminal 2 frequency setting bias frequency	902
C3	Terminal 2 frequency setting bias	1902
125	Terminal 2 frequency setting gain frequency	903
C4	Terminal 2 frequency setting gain	1903
C5	Terminal 4 frequency setting bias frequency	904
C6	Terminal 4 frequency setting bias	1904
126	Terminal 4 frequency setting gain frequency	905
C7	Terminal 4 frequency setting gain	1905
C22	Frequency setting voltage bias frequency (Built-in potentiometer)	922
C23	Frequency setting voltage bias (Built-in potentiometer)	1922
C24	Frequency setting voltage gain frequency (Built-in potentiometer)	923
C25	Frequency setting voltage gain (Built-in potentiometer)	1923

FREQROL-V500 series

Second parameter specification codes for parameter numbers 902 to 905 and 917 to 920

Parameter No.	Name	Second parameter specification code		
		Offset/Gain (H00)	Analog (H01)	Analog value of terminal (H02)
902	Speed setting No. 2 bias	902	1902	2902

Parameter No.	Name	Second parameter specification code		
		Offset/Gain (H00)	Analog (H01)	Analog value of terminal (H02)
903	Speed setting No. 2 gain	903	1903	2903
904	Torque command No. 3 bias	904	1904	2904
905	Torque command No. 3 gain	905	1905	2905
917	No.1 terminal bias (speed)	917	1917	2917
918	No.1 terminal gain (speed)	918	1918	2918
919	No.1 terminal bias (torque/magnetic flux)	919	1919	2919
920	No.1 terminal gain (torque/magnetic flux)	920	1920	2920

Point

Specify inverter parameter number in (s2) ((s3) in IVBWR instruction) as show below.

- In the case of parameter number 0 to 999, write the parameter number as is.
- In the case of parameter number 1000 to 9999, write parameter number + 10000. (Example: When parameter number is 1234, specify K11234)

5.9 Troubleshooting

This chapter explains troubleshooting and error codes.

Checking communication status based on LED display

Check the status of the LED display of [RD] and [SD] on the CPU module or the communication board/communication adapter.

LED display status		Operation status
RD	SD	
On	On	Data is being transmitted and received.
On	Off	Data is being received but not being transmitted.
Off	On	Data is being transmitted but not being received.
Off	Off	Data is neither being transmitted nor being received.

If signals are being sent and received normally for inverter communication, both LEDs flash brightly.
If they do not flash, check the wiring and the communication settings.

Checking installation

- Connection status

The communication cannot be operated if the PLC and the communication board/communication adapter are not connected correctly.
For the connection procedure, refer to the following.
MELSEC iQ-F FX5U User's Manual (Hardware)
MELSEC iQ-F FX5UC User's Manual (Hardware)

- Wiring

Verify that all communication equipment is correctly wired. (☞ Page 100 Wiring)

Checking sequence program

A serial port using any other communication (such as RS2 instruction) cannot use an inverter communication instruction.
(☞ Page 236 Combined Use of Serial Communication)

Checking the communication settings

CPU module communication settings

Verify that the protocol type is “Inverter Communication”. If the communication settings are not “Inverter Communication”, communication will not function correctly. (☞ Page 118 PLC Communication settings)
After changing communication settings, make sure to turn the PLC power from OFF→ON, or reset.

Checking inverter operation status

1. When the operation mode of an inverter is not changed to computer link operation mode

- Verify that the inverter is set to the external operation mode.
- Verify that no signal is being input to the external terminals STF and STR.
- Verify that the correct change operation mode program is being executed.

2. When an inverter cannot be started even in computer link operation mode

- Verify that the program for starting the inverter is executed correctly.
- Verify that the operation command rights and speed command rights are set correctly.
- Verify that the allowable communication time interval is set correctly.

3. When an inverter is stopped by an alarm during operation due to defective communication

- Verify that a communication cable is connected correctly between the PLC and the inverter. (Check for poor contact or wire breakage).
- Verify that a sequence program is created so that communication is executed with each inverter within a constant cycle. Set the communication check time interval to a large value, and check the communication status.
- Verify that the allowable communication time interval is set correctly.
- Verify that termination resistors are set correctly.

Checking absence/presence of errors

If an inverter communication error occurs, it is processed as a serial communication error. (☞ Page 124)

Serial communication error

■Error flags

The following devices turn ON when an error occurs during serial communication.

FX5 dedicated				FX3 Series compatible		Name	Description
CH1	CH2	CH3	CH4	CH1	CH2		
SM8500	SM8510	SM8520	SM8530	SM8063	SM8438	Serial communication error	Turns ON when an error occurs in serial communication.

■Error code

When the serial communication error turns ON, the error code is stored in the corresponding device specified in the table below.

FX5 dedicated				FX3 Series compatible		Name	Description
CH1	CH2	CH3	CH4	CH1	CH2		
SD8500	SD8510	SD8520	SD8530	SD8063	SD8438	Serial communication error code	When a serial communication error occurs, the error code is stored.

The error code (hexadecimal) is below.

Error code (hexadecimal)	Description
7010H	Parity error, overrun error or framing error
76**H	Inverter communication error (☞ Page 145)

■List of error codes for inverter communication

The error codes shown below are stored when a communication error is caused by an inverter communication instruction.

Error code (HEX)	Description of error		Inverter operation
0000H	Normal end	(No Errors)	—
7601H	—	No response from the inverter.	
7602H	Timeout error	Sending from inverter was aborted midway.	
7603H	Station number error	An unspecified station gave response.	
7604H	Sum check error	The sum of data sent back by the inverter did not match.	
7608H	Sending timeout error	Sending to the inverter was not completed within the specified time.	
7609H	Receive data error	Wrong data was received from the inverter.	
7620H	Computer NAK error	Inverter sent the error code H0. The number of retries exceeded the allowable number because of an error in the transfer request data.	When errors have occurred consecutively beyond the allowable number of retries, inverter is brought to an alarm stop.
7621H	Parity error	Inverter sent the error code H1. The contents are different from the specified parity.	
7622H	Sum check error	Inverter sent the error code H2. The sum check code in the computer is different from the sum value calculated from the data received by the inverter.	
7623H	Protocol error	Inverter sent the error code H3. There is a syntax error in data received by the inverter. Or, data reception is not completed within a certain amount of time. CR/LF does not match parameter setting.	
7624H	Framing error	Inverter sent the error code H4. The stop bit length is different from the initial set value.	
7625H	Overrun error	Inverter sent the error code H5. Before receiving the completed data in the inverter, the computer sent the next set of data.	
7626H	Undefined	Inverter sent the error code H6. Not defined currently in inverter.	—
7627H	Character error	Inverter sent the error code H7. An unused character (other than 0 to 9, A to F and control codes) was received.	Inverter does not accept the received data, but is not brought to an alarm stop.
7628H	Undefined	Inverter sent the error code H8. Not defined currently in inverter.	—
7629H	Undefined	Inverter sent the error code H9. Not defined currently in inverter.	
762AH	Mode error	Inverter sent the error code HA. A parameter was written in a mode other than computer link operation mode, or while the inverter was operating.	Inverter does not accept the received data, but is not brought to an alarm stop.
762BH	Instruction code error	Inverter sent the error code HB. Instruction code error. Non-existing instruction code was specified.	
762CH	Data range error	Inverter sent the error code HC. In writing a parameter or operation frequency, data outside the allowable range was specified.	
762DH	Undefined	Inverter sent the error code HD. Not defined currently in inverter.	—
762EH	Undefined	Inverter sent the error code HE. Not defined currently in inverter.	
762FH	Undefined	Inverter sent the error code HF. Not defined currently in inverter.	

■IVMC instruction error codes

When errors occur in the send data of the IVMC instruction, the following error codes are stored.

Error code (HEX)	Description of error	Inverter operation
0000H	No error has occurred in both send data 1 and send data 2. Normal end	—
7640H	IVMC instruction send data 1: Mode error A parameter was written in a mode other than computer link operation mode or while inverter was operating.	The inverter accepts data corresponding to send data 2. It is not brought to an alarm stop.
7641H	IVMC instruction send data 1: Instruction code error Non-existing instruction code was specified.	
7642H	IVMC instruction send data 1: Data range error Data outside the allowable range was specified.	
7643H	IVMC instruction send data 2: Mode error A parameter was written in a mode other than computer link operation mode or while inverter was operating.	The inverter accepts data corresponding to send data 1. It is not brought to an alarm stop.
7644H	IVMC instruction send data 2: Instruction code error Non-existing instruction code was specified.	
7645H	IVMC instruction send data 2: Data range error Data outside the allowable range was specified.	
7646H	IVMC instruction send data 1: Mode error IVMC instruction send data 2: Mode error	The inverter does not accept data corresponding to send data 1 and 2, but is not brought to an alarm stop.
7647H	IVMC instruction send data 1: Mode error IVMC instruction send data 2: Instruction code error	
7648H	IVMC instruction send data 1: Mode error IVMC instruction send data 2: Data range error	
7649H	IVMC instruction send data 1: Instruction code error IVMC instruction send data 2: Mode error	
764AH	IVMC instruction send data 1: Instruction code error IVMC instruction send data 2: Instruction code error	
764BH	IVMC instruction send data 1: Instruction code error IVMC instruction send data 2: Data range error	
764CH	IVMC instruction send data 1: Data range error IVMC instruction send data 2: Mode error	
764DH	IVMC instruction send data 1: Data range error IVMC instruction send data 2: Instruction code error	
764EH	IVMC instruction send data 1: Data range error IVMC instruction send data 2: Data range error	

Operation error

■Error flags

The operation error flag turns ON when an operation error occurs in the inverter communication instruction.

Verify that the device specified in the table below is ON.

FX5 dedicated				Name	Description
CH1	CH2	CH3	CH4		
SM0				Latest self-diagnostic error (Including the annunciator ON)	Turns ON when an operation error occurs.
SM1				Latest self-diagnostic error (Not including the annunciator ON)	
SM56, SM8067				Operation error	

■Error codes

When the operation error flag turns ON, the error code (hexadecimal) is stored in the operation error code (SD0/SD8067).

For the error codes stored in the device, refer to the operation error of each inverter communication instruction.

5.10 Related Devices

List of related devices

Special relay

■FX5 only

Device No.				Name	Description	R/W
CH1	CH2	CH3	CH4			
SM8029				Instruction execution completed	Turns ON when execution of instruction is completed, and remains ON for 1 scan.	R
SM8500	SM8510	SM8520	SM8530	Serial communication error	Turns ON when an error occurs in serial communication.	R
SM8920	SM8930	SM8940	SM8950	Inverter communicating	Remains ON while inverter communication is being executed.	R
SM8921	SM8931	SM8941	SM8951	IVBWR instruction error	Turns ON when an IVBWR instruction error occurs.	R

R: Read only

■FX3 Series compatible

Device No.		Name	Description	R/W
CH1	CH2			
SM8063	SM8438	Serial communication error	Turns ON when an error occurs in serial communication.	R
SM8151	SM8156	Inverter communicating	Remains ON while inverter communication is being executed.	R
SM8152	SM8157	Inverter communication error	Turns ON when an error occurs in inverter communication.	R
SM8153	SM8158	Inverter communication error latch	Turns ON when an error occurs in inverter communication.	R
SM8154	SM8159	IVBWR instruction error	Turns ON when an IVBWR instruction error occurs.	R

R: Read only

Special registers

■FX5 only

Device No.				Name	Description	R/W
CH1	CH2	CH3	CH4			
SD8500	SD8510	SD8520	SD8530	Serial communication error code	Stores the error code when a serial communication error occurs.	R
SD8502	SD8512	SD8522	SD8532	Serial communication settings	Stores the setting of the communication parameter.	R
SD8921	SD8931	SD8941	SD8951	IVBWR instruction error parameter number	Stores a parameter number in which an IVBWR instruction error has occurred.	R
SD8981	SD8991	SD9001	SD9011	Response wait time	Stores the communication response wait time.	R
SD8503	SD8513	SD8523	SD8533	Serial communication operation mode	Stores the communication type being used.	R

R: Read only

■FX3 Series compatible

Device No.		Name	Description	R/W
CH1	CH2			
SD8063	SD8438	Serial communication error code	Stores the error code when a serial communication error occurs.	R
SD8152	SD8157	Inverter communication error code	Stores the error code when an inverter communication error occurs.	R
SD8154	SD8159	IVBWR instruction error parameter number	Stores a parameter number in which an IVBWR instruction error has occurred.	R
SD8419	SD8439	Serial communication operation mode	Stores status of the current communication being executed.	R

R: Read only

Details of related devices

The following devices are used in inverter communications.
The "FX3 Series-compatible" device operates only the channel which is specified in the SM/SD settings of communication setting (☞ Page 118).

Instruction execution completed

Turns ON when the execution of inverter communication instruction is completed, and remains ON for 1 scan.
When an error occurs in an inverter communication instruction, remains ON for 1 scan in the same way.

FX5 dedicated	Description	R/W
SM8029	When execution of instruction is completed, turns ON for 1 scan.	R

R: Read only

Precautions

Do not turn ON/OFF by program or engineering tool.
Instruction execution completed is also used as the execution completed flag for other instructions (such as positioning instructions).
When using instruction execution completed, provide the contact just under the instruction whose execution completion is to be checked.

Serial communication error

Turns ON when an error occurs in serial communication. These flags are used to check the serial communication error.
Turns ON when a parity error, overrun error or framing error occurs during communication with inverters or when an inverter communication error occurs.

FX5 dedicated				FX3 Series compatible		Description	R/W
CH1	CH2	CH3	CH4	CH1	CH2		
SM8500	SM8510	SM8520	SM8530	SM8063	SM8438	Turns ON when an error occurs in serial communication. Devices do not turn OFF even when normal communication is restored.	R

R: Read only

After a device above turns ON, the error code is stored in the corresponding device below.

FX5 dedicated				FX3 Series compatible		Name	Description
CH1	CH2	CH3	CH4	CH1	CH2		
SD8500	SD8510	SD8520	SD8530	SD8063	SD8438	Serial communication error code	When a serial communication error occurs, the error code is stored.

Precautions

Do not turn ON or OFF with program or engineering tool.
Serial communication error do not turn OFF even if normal communication is restored. The devices turn OFF when power is turned OFF→ON, STOP→RUN, reset or SM50 (Error Detection Reset Completion) is turned ON.

Inverter communicating

These devices remain ON while communicating with inverter by an inverter communication instruction.

FX5 dedicated				FX3 Series compatible		Description	R/W
CH1	CH2	CH3	CH4	CH1	CH2		
SM8920	SM8930	SM8940	SM8950	SM8151	SM8156	Remains ON while communication with an inverter is executed by an inverter communication instruction.	R

R: Read only

Precautions

When [Inverter communicating] is ON, instructions other than the instruction under execution cannot be executed.
Do not turn ON/OFF by program or engineering tool.

Inverter communication error

If FX3 Series compatible SM/SD area settings have been set, the devices turn ON if an error occurs for an inverter communication instruction.

FX3 Series compatible				Description	R/W
CH1		CH2			
SM8152	SM8153*1	SM8157	SM8158*1	Turns ON when an inverter communication error occurs.	R

R: Read only

*1 Supports latch function.

After the devices above turns ON, the error code is stored in the compatible devices below.

FX3 Series compatible		Name	Description
CH1	CH2		
SD8152	SD8157	Inverter communication error code latch	These devices store an error code when a communication error is caused by an inverter communication instruction.

Storing an error code is only for the first error occurrence, and it is not updated for the second error occurrence onwards.

Precautions

Do not turn ON/OFF by program or engineering tool.
Inverter communication errors are not cleared even after communication is restored to normal state.
Devices are cleared when power is turned OFF→ON, STOP→RUN, reset or SM50 (Error Detection Reset Completion) is turned ON.

IVBWR instruction error

The devices turn ON when a parameter number or set value specified in IVBWR instruction is outside the allowable range.

FX5 dedicated				FX3 Series compatible		Description	R/W
CH1	CH2	CH3	CH4	CH1	CH2		
SM8921	SM8931	SM8941	SM8951	SM8154	SM8159	These devices turn ON when an error occurs in IVBWR instruction.	R

R: Read only

When an IVBWR instruction error is ON, the parameter number that could not be set is stored in the following corresponding devices.

FX5 dedicated				FX3 Series compatible		Name	Description
CH1	CH2	CH3	CH4	CH1	CH2		
SD8921	SD8931	SD8941	SD8951	SD8154	SD8159	IVBWR instruction error parameter number	Stores the parameter number which was not written by IVBWR instruction.

Precautions

Do not turn ON/OFF by program or engineering tool.
IVBWR communication errors are not cleared even after communication is restored to normal state.
Devices are cleared when power is turned OFF→ON, STOP→RUN, reset or SM50 (Error Detection Reset Completion) is turned ON.

Serial communication error code

Stores the error code (☞ Page 144) when the inverter communication instruction error occurs.

FX5 dedicated				FX3 Series compatible		Description	R/W
CH1	CH2	CH3	CH4	CH1	CH2		
SD8500	SD8510	SD8520	SD8530	SD8063	SD8438	When a serial communication error occurs, the error code is stored.	R

R: Read only

Precautions

Do not change the value with program or engineering tool.

Serial communication error codes are not cleared even after communication is restored to normal state.

Devices are cleared when power is turned OFF→ON, STOP→RUN, reset or SM50 (Error Detection Reset Completion) is turned ON.

Serial communication settings

Stores the communication parameters set in the communication settings when PLC power is turned OFF→ON, STOP→RUN, PAUSE→RUN or reset. (☞ Page 118)

FX5 dedicated				Description	R/W
CH1	CH2	CH3	CH4		
SD8502	SD8512	SD8522	SD8532	Stores the setting of the communication parameter.	R

R: Read only

The descriptions of the communication parameters are as follows.

Bit No.	Name	Description	
		0 (bit = OFF)	1 (bit = ON)
b0	Data length	7 bits	8 bits
b1 b2	Parity bit	b2, b1 (0, 0): Not provided (0, 1): Odd (1, 1): Even	
b3	Stop bit	1 bit	2 bits
b4 b5 b6 b7	Baud rate	b7, b6, b5, b4 (0,1,1,1): 4800 bps (1,0,0,0): 9600 bps (1,0,0,1): 19200 bps (1,0,1,0): 38400 bps (1,0,1,1): 57600 bps (1,1,0,1): 115200 bps	

Precautions

Do not change the value with program or engineering tool.

Error code for inverter communication

If FX3 Series compatible SM/SD area settings have been set, error code (☞ Page 145) is stored if communication error occurs by inverter communication instruction.

FX3 Series compatible		Description	R/W
CH1	CH2		
SD8152	SD8157	These devices store an error code when a communication error is caused by an inverter communication instruction.	R

R: Read only

Error code of first error that occurred is maintained if errors occur for multiple instructions.

Precautions

Do not change the value with program or engineering tool.
Inverter communication error code is not cleared even if communication is restored to normal state.
Devices are cleared when power is turned OFF→ON, STOP→RUN, reset or SM50 (Error Detection Reset Completion) is turned ON.

IVBWR instruction error parameter number

These devices store the parameter number in which an error has occurred when IVBWR instruction error flag turns ON.

FX5 dedicated				FX3 Series compatible		Description	R/W
CH1	CH2	CH3	CH4	CH1	CH2		
SD8921	SD8931	SD8941	SD8951	SD8154	SD8159	Stores the parameter number which could not be written by IVBWR instruction.	R

R: Read only

Error code of first error that occurred is maintained if multiple errors occur for IVBWR instruction.

Precautions

Do not change the value with program or engineering tool.

Response wait time

Stores the communication response wait time set in the communication settings. (☞ Page 118)

FX5 dedicated				Description	R/W
CH1	CH2	CH3	CH4		
SD8981	SD8991	SD9001	SD9011	Stores the communication response wait time of inverter communication. 1 to 32767 (ms)	R

R: Read only

Precautions

If the set value is outside the range or less than 100 ms, response waiting time operates as 100 ms.
Do not change the value with program or engineering tool.

Serial communication operation mode

Stores the communication function code of the serial communication under execution.

FX5 dedicated				FX3 Series compatible		Description	R/W
CH1	CH2	CH3	CH4	CH1	CH2		
SD8503	SD8513	SD8523	SD8533	SD8419	SD8439	0: MELSOFT Connection or MC protocol 3: N:N Network Communication 5: Non-protocol Communication 6: Parallel Link Communication 7: Inverter Communication 9: MODBUS RTU Communication 12: Predefined protocol support Other than above: Not used	R

R: Read only

Precautions

Do not change the value with program or engineering tool.
These devices store "7" while an inverter communication instruction is being driven or not, as long the communication mode has not changed.

6 NON-PROTOCOL COMMUNICATION

This chapter describes non-protocol communication.

6.1 Function Summary

Non-protocol communication exchanges data between a printer, bar code reader, etc. with no protocol.
Non-protocol communication is available using the RS2 instruction.
The RS2 instruction can simultaneously communicate on 4 channels by specifying the channels.

- Up to 4096 points of data can be sent, and up to 4096 points of data can be received.
- Data transfer is enabled when the connected equipment supports non-protocol serial communication.
- The overall distance is 1200 m maximum. (Applies only when configured by FX5-485ADP)

System

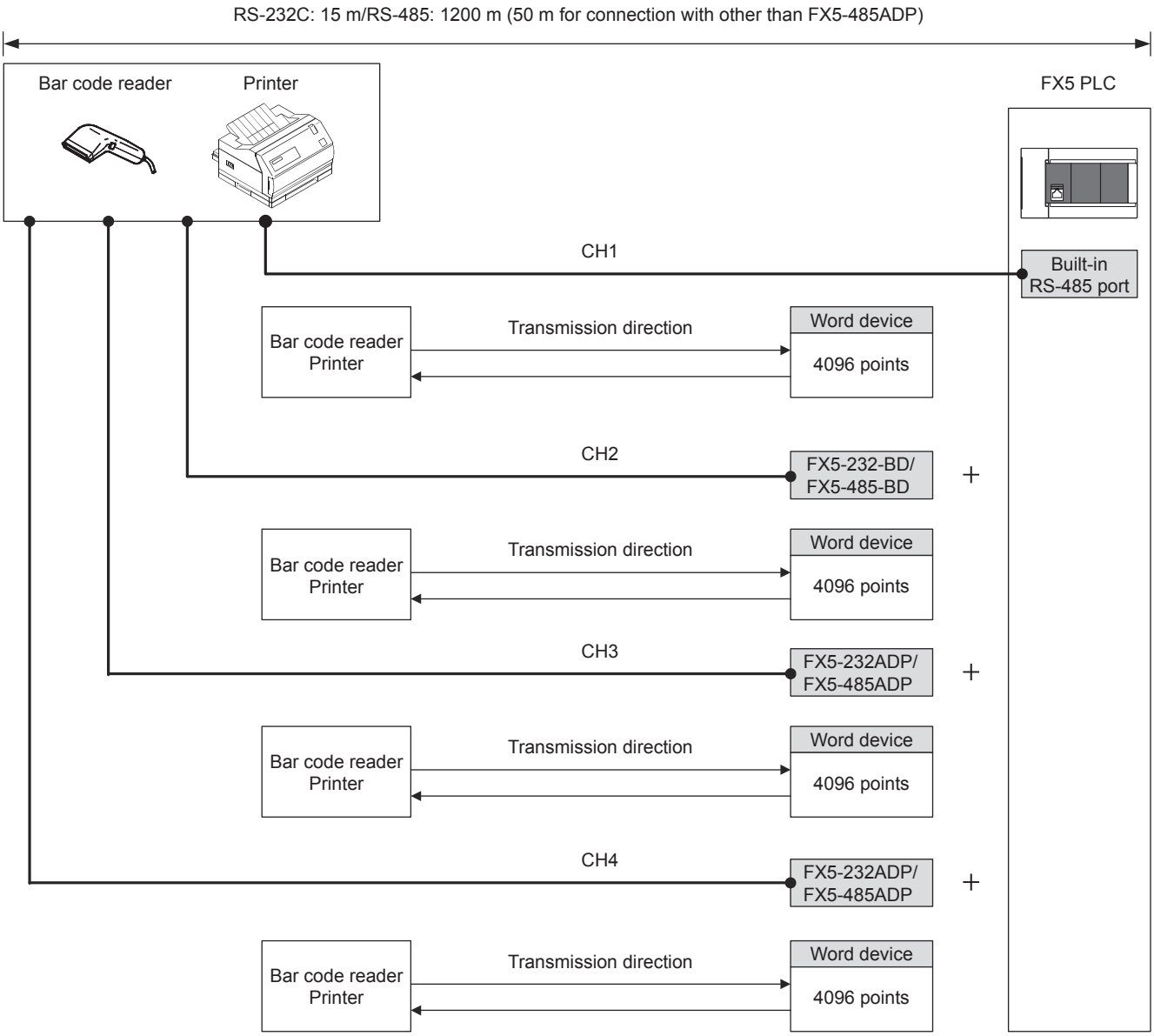

6.2 Procedure before Operation

The flow chart below shows the Non-Protocol Communication setting procedure up until data link:

1. Check communication specifications

For communication specifications, and communication applicability, refer to ☞ Page 154 Specifications.

2. System configuration and selection.

For system configuration of each PLCs, refer to ☞ Page 153 System Configuration.

3. Wiring

For selection of cables and connection equipment, and wiring example, refer to ☞ Page 154 Wiring.

4. Communication settings*1

For communication settings of communication device, refer to ☞ Page 159 Communication Settings.

5. Program creation

For detailed explanation of related devices, operation of control line, and program, refer to ☞ Page 162 Programming.

*1 For details on operating procedures of GX Works3, refer to the manual below.
GX Works3 Operating Manual

6.3 System Configuration

This section outlines the system configuration required to use non-protocol communication.

You can use up to a maximum of 4 channels (FX5UC is maximum of 3 channels) of non-protocol communication in the CPU module using the built-in RS-485 port, communication board and communication adapters.

The serial port assignments are fixed to the following numbers, regardless of the system configuration.

■FX5U CPU module

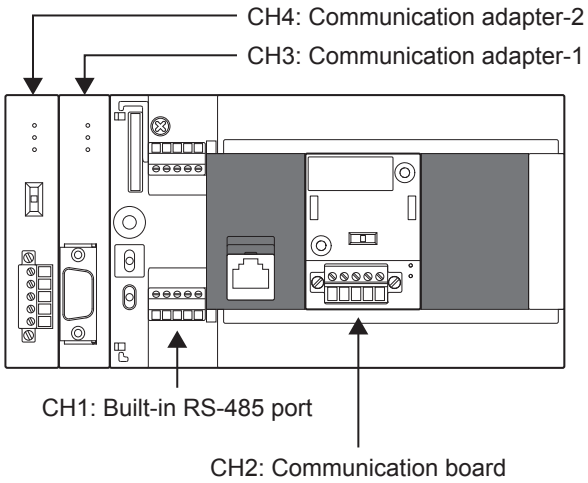

■FX5UC CPU module

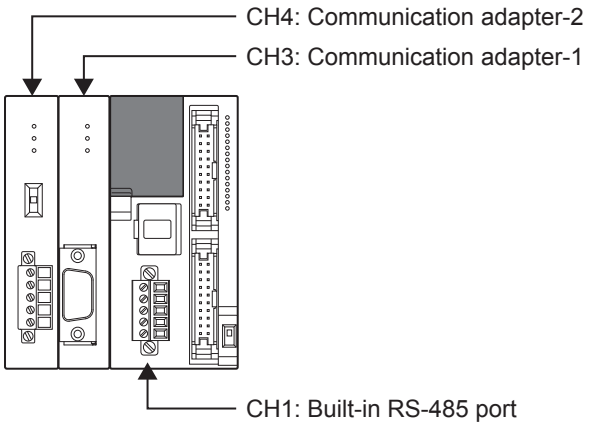

Communication device

		Serial port	Important points for selection	Overall distance
Built-in RS-485 port		CH1	Since it is built-into the CPU module, there is no need to add equipment.	50 m or less
Communication board	FX5-485-BD	CH2	Mounted on top of the CPU module, there is no change in the installation space requirements.	50 m or less
	FX5-232-BD			15 m or less
Communication adapter	FX5-485ADP	CH3, CH4*1	Mount the communication adapter to the left of the CPU module.	1200 m or less
	FX5-232ADP			15 m or less

*1 Assigned to CH3 or CH4 in order of proximity to CPU module.

6.4 Specifications

This section describes the communication specifications and performance of non-protocol communication.

Items		Specifications	
Transmission standard		RS-485 and RS-422 standard	RS-232C standard
Maximum overall distance		When FX5-485ADP is used: 1200 m or less When using built-in RS-485 port or FX5-485-BD: 50 m or less	15 m or less
Number of Transfer Data		0 to 4096	
Protocol type		—	
Control procedure		Non-protocol communication	
Communication method		Half-duplex, bi-directional communication/full-duplex, bi-directional communication	
Baud rate		300, 600, 1200, 2400, 4800, 9600, 19200, 38400, 57600, 115200 bps	
Character format	Start bit	—	
	Data length	7 bits/8 bits	
	Parity bit	None, odd or even	
	Stop bit	1 bit/2 bits	
Header		Provided or not provided	
Terminator		Provided or not provided	
Control line		—	Provided or not provided
Sum check		Provided or not provided	

6.5 Wiring

This section explains about the wiring.

Wiring procedure

1. Preparing for wiring

Prepare cables and termination resistors required for wiring. (☞ Page 154 Cable)

2. Turn OFF the PLC power

Before wiring, make sure that the PLC power is OFF.

3. Wire the communication equipment

Connect the RS-485, RS-232C communication equipment. (☞ Page 157 Connection diagram)

Cable

Select cables using the procedure described below.

Twisted pair cable

Use shielded twisted pair cables for connecting RS-485 communication equipment.

The specifications of the cables used in wiring are shown.

■RS-485 cable specifications

Items	Description
Cable type	Shielded cable
Number of pairs	2p, 3p
Conductor resistance (20℃)	88.0 Ω/km or less
Insulation resistance	10000 MΩ-km or more
Voltage resistance	500 V DC, 1minute
Electrostatic capacitance (1 kHz)	60 nF/km or less as an average
Characteristic impedance (100 kHz)	110±10 Ω

■Cable structural drawing (reference)

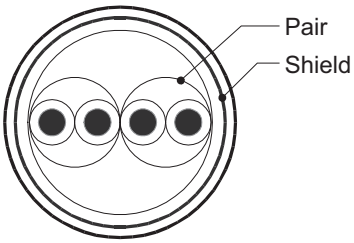

Example of two-pair cable structural drawing

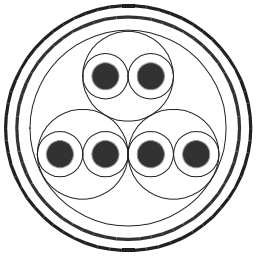

Example of three-pair cable structural drawing

Connecting cables

The table below shows applicable cables and tightening torques.

	Number of wires connected per terminal	Wire size		Tightening torque
		Solid wire, Stranded wire	Wire ferrule with insulation sleeve	
FX5U CPU module built-in RS-485 port	One wire	0.2 to 0.5 mm^2 (AWG24 to 20)	0.2 to 0.5 mm^2 (AWG24 to 20)	0.22 to 0.25 N·m
	Two wires	0.2 mm^2 (AWG24)	—	
FX5UC CPU module built-in RS-485 port FX5-485-BD FX5-485ADP	One wire	0.3 to 0.5 mm^2 (AWG22 to 20)	0.3 to 0.5 mm^2 (AWG22 to 20)	
	Two wires	0.3 mm^2 (AWG22)	—	

Precautions

Do not tighten terminal screws with torque beyond the specified range. Otherwise it may cause equipment failure or malfunction.

■Wire end treatment

With regard to the cable end treatment, use a stranded cable or solid cable as is, or use a wire ferrule with insulating sleeve.

- When using a stranded cable or solid cable as is

- Twist the end of stranded wire and make sure that there are no loose wires.
- Please do not solder plate the ends of the cable.

Dimensions of the cable end	
FX5U CPU module built-in RS-485 port	**FX5UC CPU module built-in RS-485 port, FX5-485-BD, FX5-485ADP**
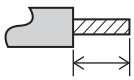	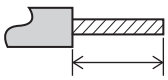

- When using a wire ferrule with insulation sleeve

Because it is difficult to insert a cable into an insulating sleeve depending on the thickness of the cable sheath, select the proper cable according to the outline drawing.

FX5U CPU module built-in RS-485 port	FX5UC CPU module built-in RS-485 port, FX5-485-BD, FX5-485ADP
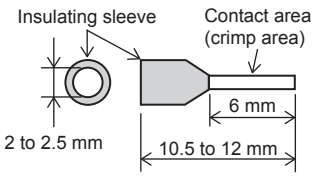	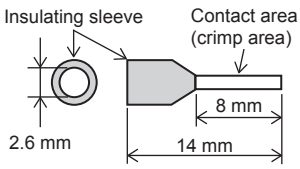

<Reference>

	Manufacturer	Model name	Crimping tool
FX5U CPU module built-in RS-485 port	PHOENIX CONTACT GmbH & Co. KG	AI 0.5-6WH	CRIMPFOX 6 CRIMPFOX 6T-F
FX5UC CPU module built-in RS-485 port FX5-485-BD FX5-485ADP		AI 0.5-8WH	

• Tool

For tightening the terminal, use a commercially available small screwdriver with straight tip that is not widened toward the end as shown below.

■Precautions

If the diameter of the screwdriver tip is too small, the required tightening torque cannot be achieved. To achieve the appropriate tightening torque shown in the previous page, use the following screwdriver or its equivalent (grip diameter: approximately 25 mm).

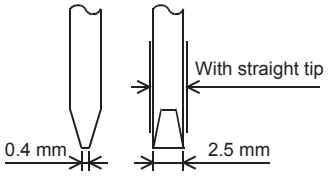

<Reference>

Manufacturer	Model name
PHOENIX CONTACT GmbH & Co. KG	SZS 0.4×2.5

Termination resistor setting

Make sure to provide a termination resistor at both ends of the wire.

The built-in RS-485 port, FX5-485-BD and FX5-485ADP have a built-in termination resistor.

Set the termination resistor selector switch as below.

Wiring	Termination resistor selector switch
Two-pair wiring	330 Ω
One-pair wiring	110 Ω

■FX5U CPU module built-in RS-485 port

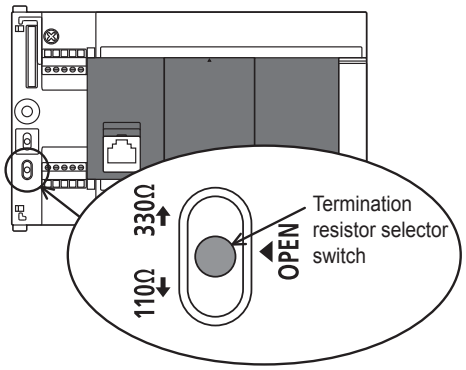

■FX5UC CPU module built-in RS-485 port

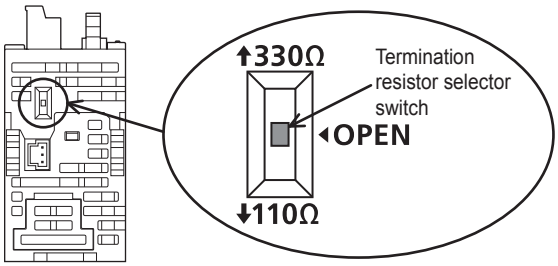

■FX5-485-BD

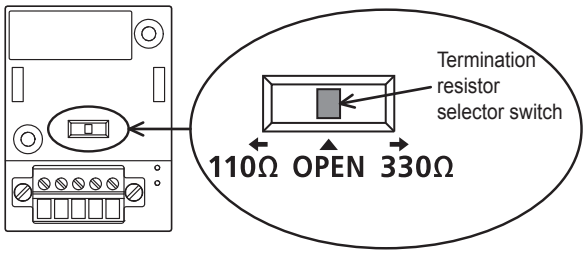

■FX5-485ADP

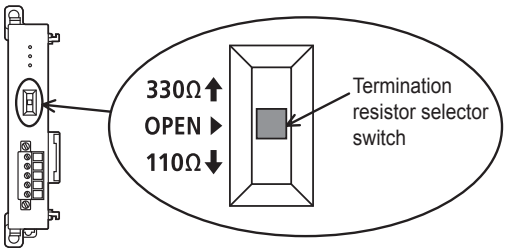

Connection diagram

RS-232C communication equipment

■Connector pin arrangement

FX5-232-BD, FX5-232ADP		Signal name	Function
D-SUB 9-pin (male)	Pin No.		
	1	CD (DCD)	Receive carrier detection
	2	RD (RXD)	Receive data
	3	SD (TXD)	Send data
	4	ER (DTR)	Send request
	5	SG (GND)	Signal ground
	6	DR (DSR)	Send enabled
	7,8,9	Not used	
	—	FG	Frame ground

■Wiring

Representative wiring examples are shown in this section. When pin numbers in the counterpart equipment are different, wire the pins as shown below.

- When connected equipment is Data Terminal Equipment

PLC		Counterpart equipment operating in accordance with RS-232C					
Name	FX5-232-BD FX5-232ADP	Name	Using CS/RS		Name	Using DR/ER	
	D-Sub 9-pin (female)		D-Sub 9-pin	D-Sub 25-pin		D-Sub 9-pin	D-Sub 25-pin
FG	-	FG	-	1	FG	-	1
RD (RXD)	2	RD (RXD)	2	3	RD (RXD)	2	3
SD (TXD)	3	SD (TXD)	3	2	SD (TXD)	3	2
ER (DTR)*1	4	RS (RTS)	7	4	ER (DTR)	4	20
SG (GND)	5	SG (GND)	5	7	SG (GND)	5	7
DR (DSR)*1	6	CS (CTS)	8	5	DR (DSR)	6	6

*1 When the control line is not used, wiring is not required for this signal.
For the interlink mode, the control line will be used, so wiring for this signal is required.

- When connected equipment is Data Communication Equipment

PLC		Counterpart equipment operating in accordance with RS-232C					
Name	FX5-232-BD FX5-232ADP	Name	Using CS/RS		Name	Using DR/ER	
	D-Sub 9-pin (female)		D-Sub 9-pin	D-Sub 25-pin		D-Sub 9-pin	D-Sub 25-pin
FG	-	FG	-	1	FG	-	1
CD (DCD)	1	CD (DCD)	1	8	CD (DCD)	1	8
RD (RXD)	2	RD (RXD)	2	3	RD (RXD)	2	3
SD (TXD)	3	SD (TXD)	3	2	SD (TXD)	3	2
ER (DTR)	4	RS (RTS)	7	4	ER (DTR)	4	20
SG (GND)	5	SG (GND)	5	7	SG (GND)	5	7
DR (DSR)	6	CS (CTS)	8	5	DR (DSR)	6	6

RS-485 communication equipment

One-pair wiring and two-pair wiring (for RS-422) are applicable for RS-485 communication. Wire according to the counterpart equipment.

The wiring that can be used is limited by the control line setting in the communication settings (☞ Page 159 Communication Settings).

Control line	One-pair wiring	Two-pair wiring
Bidirectional half duplex	○	○
Bidirectional full duplex	×	○

○: Supported, ×: Not supported

■For one-pair wiring

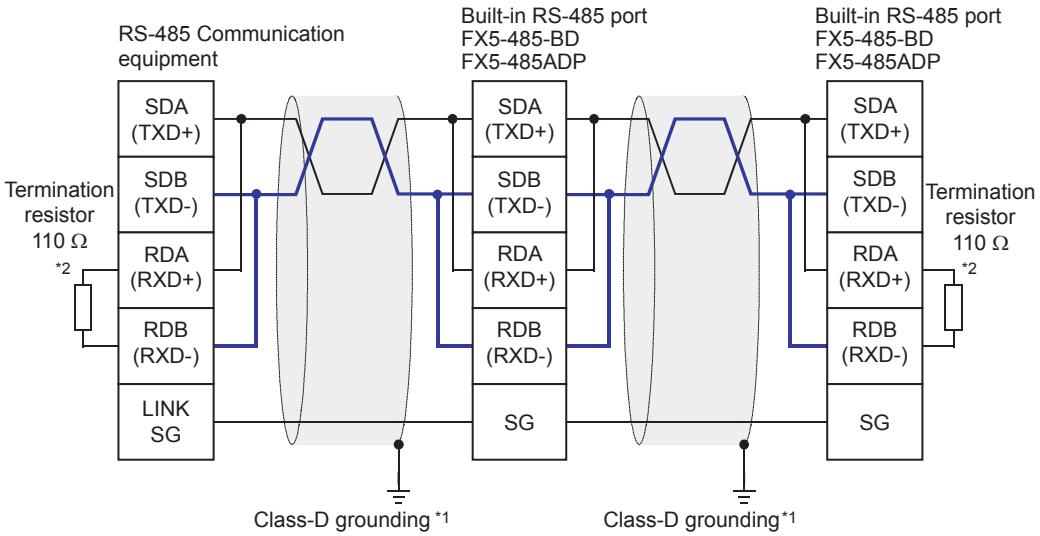

*1 Make sure to perform Class-D grounding on the shield of the twisted pair cable to be connected.

*2 Make sure to provide a termination resistor at both ends of the wire. The built-in RS-485 port, FX5-485-BD and FX5-485ADP have built-in termination resistors. Set the termination resistor selector switch to 110 Ω.

Precautions

When the control line is set to [Bidirectional Full Duplex], the built-in RS-485 port, FX-485-BD and FX5-485ADP become a full-duplex interface, and echo will occur.

■For two-pair wiring

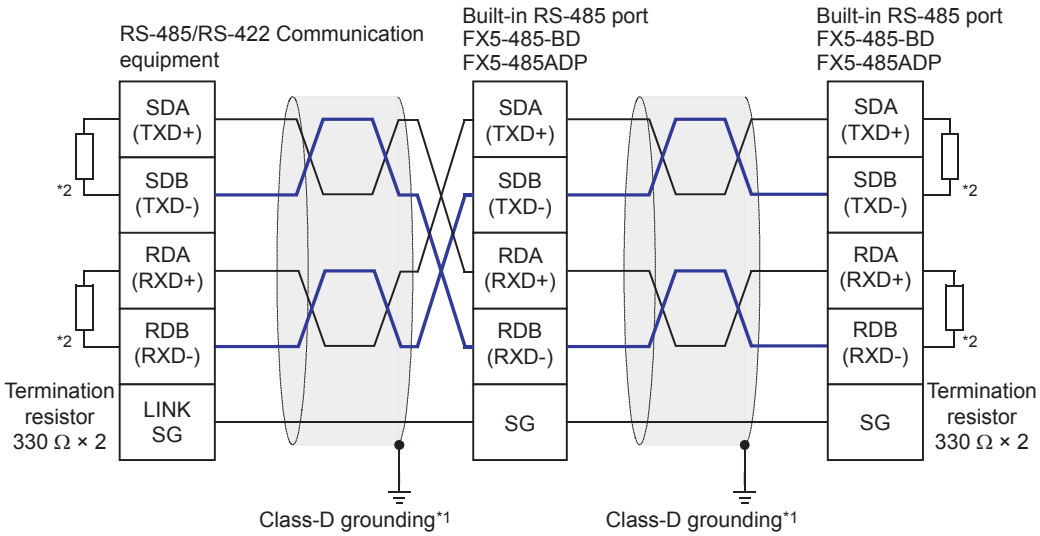

*1 Make sure to perform Class-D grounding on the shield of the twisted pair cable to be connected.

*2 Make sure to provide a termination resistor at both ends of the wire. The built-in RS-485 port, FX5-485-BD and FX5-485ADP have built-in termination resistors. Set the termination resistor selector switch to 330 Ω.

Grounding

Grounding should be performed as stated below.

- Perform Class-D grounding. (Grounding resistance: 100 Ω or less)
- Independent grounding should be performed for best results.

When independent grounding cannot be performed, perform "shared grounding" as shown in the following figure.

For details, refer to the following.

📖MELSEC iQ-F FX5U User's Manual (Hardware)
📖MELSEC iQ-F FX5UC User's Manual (Hardware)

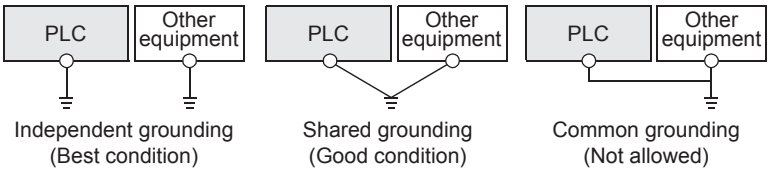

- The grounding wire size should be AWG 14 (2 mm^2) or larger.
- Bring the grounding point close to the PLC as much as possible so that the ground cable can be shortened.

6.6 Communication Settings

For the FX5 communication settings of this function, parameters are set using GX Works3. For details about GX Works3, refer to 📖GX Works3 Operating Manual.

Setting of parameter differs according to the module used. The procedure for each module is as follows.

Built-in RS-485 port (CH1)

Navigation Window ⇨ Parameter ⇨ FX5UCPU ⇨ Module Parameter ⇨ 485 Serial Port

Window

The following screen will be displayed if [Non-protocol Communication] is set for the communication protocol type.

■Basic Settings

Item	Setting
⊟ *Communication Protocol Type*	Set communication protocol type.
Communication Protocol Type	Non-protocol Communication
⊟ Advanced Settings	Set detailed setting.
Data Length	7bit
Parity Bit	Odd
Stop Bit	1bit
Baud Rate	9,600bps
Header	Not Added
Header Setting Value	02000000
Terminator	Not Added
Terminator Setting Value	03000000
Control Mode (RS - 232C)	No Control Line
Control Mode (RS - 485)	Half Duplex Bi-directional Communication
Sum Check Code	Not Added
Control Procedure	Format 1 (CR, LF Not Added)

■Fixed Setting

Item	Setting
⊟ *8 bit Process Mode*	Set 8 bit process mode.
8 bit Process Mode	16bit Mode
⊟ Time-out Period	Set time-out period.
Time-out Period	10 ms

■SM/SD Setting

Item	Setting
⊟ *Latch Setting*	**Set the latch of SM/SD device.**
Advanced Settings	Do Not Latch
8 bit Process Mode	Do Not Latch
Time-out Period	Do Not Latch
Header Setting Value	Do Not Latch
Terminator Setting Value	Do Not Latch
⊟ **FX3 Series Compatibility**	**The SM/SD device of FX3 series compatibility.**
SM/SD for Compatible	Disable

Communication board (CH2)

Navigation Window ⇨ Parameter ⇨ FX5UCPU ⇨ Module Parameter ⇨ Extended Board

Window

The following screen will be displayed if [FX5-232-BD] or [FX5-485-BD] is set for the extended board and [Non-protocol Communication] is set for the communication protocol type. Fixed setting and SM/SD setting are the same as in the case of built-in RS-485 port (CH1).

■Basic Settings

Item	Setting
⊟ *Extended Board*	**Set the extended board type.**
Extended Board	FX5-485-BD
⊟ **Communication Protocol Type**	**Set communication protocol type.**
Communication Protocol Type	Non-protocol Communication
⊟ **Advanced Settings**	**Set detailed setting.**
Data Length	7bit
Parity Bit	Odd
Stop Bit	1bit
Baud Rate	9,600bps
Header	Not Added
Header Setting Value	02000000
Terminator	Not Added
Terminator Setting Value	03000000
Control Mode (RS - 232C)	No Control Line
Control Mode (RS - 485)	Half Duplex Bi-directional Communication
Sum Check Code	Not Added
Control Procedure	Format 1 (CR, LF Not Added)

Communication adapter (CH3/CH4)

When an expansion adapter is used, add expansion adapter to Module Information.

Navigation window ⇨ Parameter ⇨ Module Information ⇨ Right-click ⇨ Add New Module

After adding the expansion adapter, make settings on the screen displayed from the following operation.

Navigation window ⇨ Parameter ⇨ Module Information ⇨ ADP1 to ADP6 (Communication adapter) ⇨ Module Parameter

Window

Each setting screen is the same as in the case of built-in RS-485 port (CH1).

Parameter setting details

Set the following items for the serial ports that use non-protocol communication.

	Items		Setting value	Reference section
Basic Settings	Extended Board*1		When using this function, select [FX5-232-BD] or [FX5-485-BD].	—
	Communication Protocol Type		When using this function, select [Non-protocol Communication].	
	Advanced Settings	Data Length	7bit/8bit	
		Parity Bit	None/Odd/Even	
		Stop Bit	1bit/2bit	
		Baud Rate	300bps/ 600bps/ 1200bps/ 2400bps/ 4800bps/ 9600bps/ 19200bps/ 38400bps/ 57600bps/ 115200bps	
		Header	Added/Not Added	Page 163
		Header Setting Value*2	00000000 to FFFFFFFF You can enter a two-digit four headers.	
		Terminator	Added/Not Added	Page 164
		Terminator Setting Value*3	00000000 to FFFFFFFF You can enter a two-digit four terminators.	
		Control Mode (RS - 232)	No Control Line/ Control Line Normal Mode/ Control Line Interlink Mode/ Control Line Modem Mode	Page 173
		Control Mode (RS - 485)	Full Duplex Bi-directional Communication/Half Duplex Bi-directional Communication	Page 171
		Sum Check Code*3	Added/Not Added	Page 172
		Control Procedure	Format 1(CR, LF Not Added) / Format 4(CR, LF Added)	Page 164
Fixed Setting	8 bit Process Mode		8 bit Mode/16bit Mode	Page 166
	Time-out Period		1 to 32767 (ms) 10 ms when set to a value outside the range.	Page 170
SM/SD Setting	FX3 Series Compatibility	SM/SD for Compatible	Disable/CH1/CH2	Refer to the following

*1 Only in the case of communication board (CH2).
*2 Valid when the header setting is [Added].
*3 Valid when the terminator setting is [Added].

FX3 Series-compatible SM/SD

When using the FX3 Series compatible SM/SD storage area, set to use special devices for either the FX3 Series CH1 or CH2.

FX3 Series compatible devices corresponding to the specified channel can be used.

For details, refer to the ☞ Page 179 Related Devices

6.7 Programming

This section explains how to create programs for non-protocol communication using RS2 instruction and how such programs operate.

For details on related devices, refer to ☞ Page 179 Related Devices.
For communication settings, refer to ☞ Page 159 Communication Settings.

Serial data communication

This section explains the function, operation and programming method of the RS2 instruction.
For details on the expression and executable format of the RS2 instruction, refer to the 📖MELSEC iQ-F FX5 Programming Manual (Instructions, Standard Functions/Function Blocks).

RS2

This instruction sends and receives data in non-protocol communication using the communication board or communication adapter connected to the CPU module or using the built-in RS-485 port to the CPU module.

Ladder	ST	FBD/LD
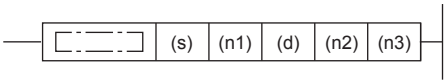	ENO:=RS2(EN,s,n1,n2,n3,d);	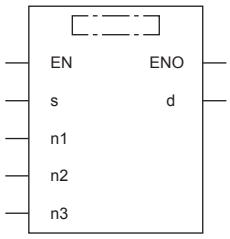

Setting data

■Content, range, data types

Operand	Description	Range	Data type	Data type (label)
(s)	Head device storing send data	—	16-bit signed binary / character string	ANY16
(n1)	Number of send data	0 to 4096	16-bit unsigned binary	ANY16_U
(d)	Head device storing receive data	—	16-bit signed binary / character string	ANY16
(n2)	Amount of received data	0 to 4096	16-bit unsigned binary	ANY16_U
(n3)	Communication CH	K1 to 4	16-bit unsigned binary	ANY16_U

■Applicable devices

Operand	Bit	Word			Double word		Indirect specification	Constant			Others
	X, Y, M, L, SM, F, B, SB, S	T, ST, C, D, W, SD, SW, R	U□\G□	Z	LC	LZ		K, H	E	$	
(s)	—	○*1	—	—	—	—	○	—	—	—	—
(n1)	○	○	○	○	—	—	○	○	—	—	—
(d)	—	○*1	—	—	—	—	○	—	—	—	—
(n2)	○	○	○	○	—	—	○	○	—	—	—
(n3)	—	—	—	—	—	—	—	○	—	—	—

*1 T,ST and C cannot be used.

Processing details

This instruction sends and receives data via non-protocol communication by way of built-in RS-485 port, communication board or communication adapter. This instruction specifies the head device storing the sent data from the CPU module, amount of data, head device storing the received data and the maximum allowable amount of received data.

Precautions

- The RS2 instruction cannot be used in the same serial port as that of the inverter communication instruction and predefined protocol support instruction.
- To change the header, terminator, time-out time or 8-bit processing mode, do so before the RS2 instruction is driven (while off). The change is enabled when the RS2 instruction is driven. While the RS2 instruction is being driven, do not change the header, terminator, time-out time or 8-bit processing mode.

Applicable frames

Message frames used in communication can be selected by setting the communication parameter.
The table below shows message frames applicable to the RS2 instruction.

1		Data			
2		Data	CR+LF		
3		Data	Terminator		
4		Data	Terminator	CR+LF	
5		Data	Terminator	Sum check	
6		Data	Terminator	Sum check	CR+LF
7	Header	Data			
8	Header	Data	CR+LF		
9	Header	Data	Terminator		
10	Header	Data	Terminator	CR+LF	
11	Header	Data	Terminator	Sum check	
12	Header	Data	Terminator	Sum check	CR+LF

■Header

When headers are set in the communication settings (☞ Page 159), the set values are stored in SD8623 and SD8624 for CH1, SD8633 and SD8634 for CH2, SD8643 and SD8644 for CH3 and SD8653 and SD8654 for CH4.
Up to four headers can be set.

Header	FX5 dedicated			
	First header	Second header	Third header	Fourth header
CH1	SD8623 (Low-order byte)	SD8623 (High-order byte)	SD8624 (Low-order byte)	SD8624 (High-order byte)
CH2	SD8633 (Low-order byte)	SD8633 (High-order byte)	SD8634 (Low-order byte)	SD8634 (High-order byte)
CH3	SD8643 (Low-order byte)	SD8643 (High-order byte)	SD8644 (Low-order byte)	SD8644 (High-order byte)
CH4	SD8653 (Low-order byte)	SD8653 (High-order byte)	SD8654 (Low-order byte)	SD8654 (High-order byte)

When data is sent, the stored data in the devices above is added at the head of the specified send data.
When data is received, receiving of the data begins when the stored data in the devices above is received continuously.
If the first header value is 00H, the header settings are not configured. The area before 00H (in 1-byte units) is used to set the headers.

■Terminator

When terminators are set in the communication settings (☞ Page 159), the set values are stored in SD8625 and SD8626 for CH1, SD8635 and SD8636 for CH2, SD8645 and SD8646 for CH3 and SD8655 and SD8656 for CH4.

Up to 4 terminators can be set.

Terminator	FX5 dedicated			
	First header	Second header	Third header	Fourth header
CH1	SD8625 (Low-order byte)	SD8625 (High-order byte)	SD8626 (Low-order byte)	SD8626 (High-order byte)
CH2	SD8635 (Low-order byte)	SD8635 (High-order byte)	SD8636 (Low-order byte)	SD8636 (High-order byte)
CH3	SD8645 (Low-order byte)	SD8645 (High-order byte)	SD8646 (Low-order byte)	SD8646 (High-order byte)
CH4	SD8655 (Low-order byte)	SD8655 (High-order byte)	SD8656 (Low-order byte)	SD8656 (High-order byte)

When data is sent, the stored data in the devices above is added at the end the specified send data.

When data is received, receiving is completed[*1] when the stored data in the devices above is received.

If the first terminator value is 00H, the terminator settings are not configured. The area before "00H" (in 1-byte units) is used to set the terminators.

*1 Receiving is completed also when the amount of received data specified by the RS2 instruction is received or when the receiving of data is suspended and the specified time-out occurs.

■Sum check

When the sum check code is selected as [Added] in the communication settings (☞ Page 159), the sum check is executed for the send and receive data.

When [Added] is selected, always configure the terminators.

When data is sent, the sum of "data" + "terminator" is calculated, and added to the send data.

When data is received, it is checked whether or not the received sum is equivalent to the sum calculated by the PLC.

■CR+LF

When the control procedure is selected as "CR + LF provided" in the communication settings (☞ Page 159), the character code of "CR + LF" is added at the end of the send data.

When data is received, receiving is completed when "CR + LF" is received continuously.

However, receiving is also completed when the specified amount of received data is received or when data receiving is suspended and the specified time-out occurs.

Make sure that "CR" is not included in the message.

Function and operation

RS2 instruction specifies head device of the send data, no. of data, head device for storing the received data, the maximum no. of data that can be received.

Create a program as shown below.

Drive contact M0

RS2	D100	D0	D200	K30	K1

• When the drive contact (M0) is set to ON, the PLC waits for sending and receiving. *1

Sending command (pulse operation type)

M1

$MOV	“TEST SEND1”	D100
MOV	K10	D0

Program example for writing send data

• When the sending command (M1) is set to ON, write the send data from D100 onwards (for no. of devices specified). Issue the sending command as a pulse.
In the example above, write send character string "TEST SEND1" in D100 onwards, and store number of characters of the send character string (10) in D0.

• After writing the send data, set the sending request (SM8561). The data is sent.

Sending request

SET	SM8561

• When sending is completed, the sending request (SM8561) is automatically reset. Do not reset it in the program. *2

Receiving complete SM8562

BMOV	D200	D500	K15

Program example for moving received data

• When the PLC receives data from the counterpart equipment, the receiving completed flag (SM8562) turns ON. When SM8562 turns ON, move the received data stored in D200 to another device.
In the example above, the data received in 16bit processing mode (stored data from D200 onwards) is moved to the 15 data register points from D500 onwards.

Receiving completed

RST	SM8562

• After moving the received data, reset the receiving completed flag (SM8562). While SM8562 is ON, the PLC cannot receive the next set of receive data. *3

*1 For handling of send and receive data, refer to ☞ Page 166 Send/receive data and amount of data.
*2 For the operation when sending data, refer to ☞ Page 169 Operation during data send.
*3 For the operation when receiving data, refer to ☞ Page 170 Operation during data receive.

Send/receive data and amount of data

RS2 instruction can handle sent and received data in two modes, 16-bit mode and 8-bit mode. The processing mode is set in the communication settings, and when the RS2 instruction is drive, the mode is switched to the set mode.
The handling of data is as follows.

■16-bit mode

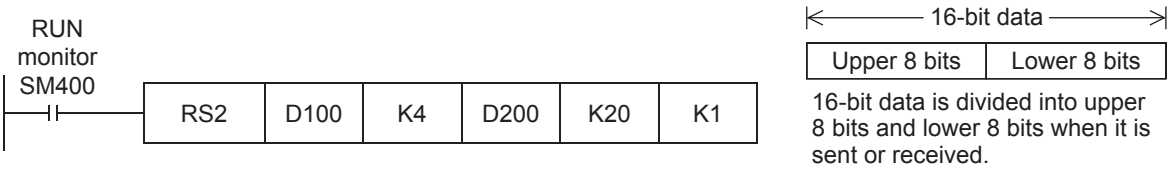

Serial communication setting

- Header : [Added] [DLE + STX (SD8623: 0210H, SD8624: 0000H)]
- Terminator : [Added] [DLE + ETX (SD8625: 0310H, SD8626: 0000H)]
- Sum check code : [Added]
- Control procedure : [CR, LF added]
- Control mode : [None (RS-232C)]

- Send data and amount of remaining send data

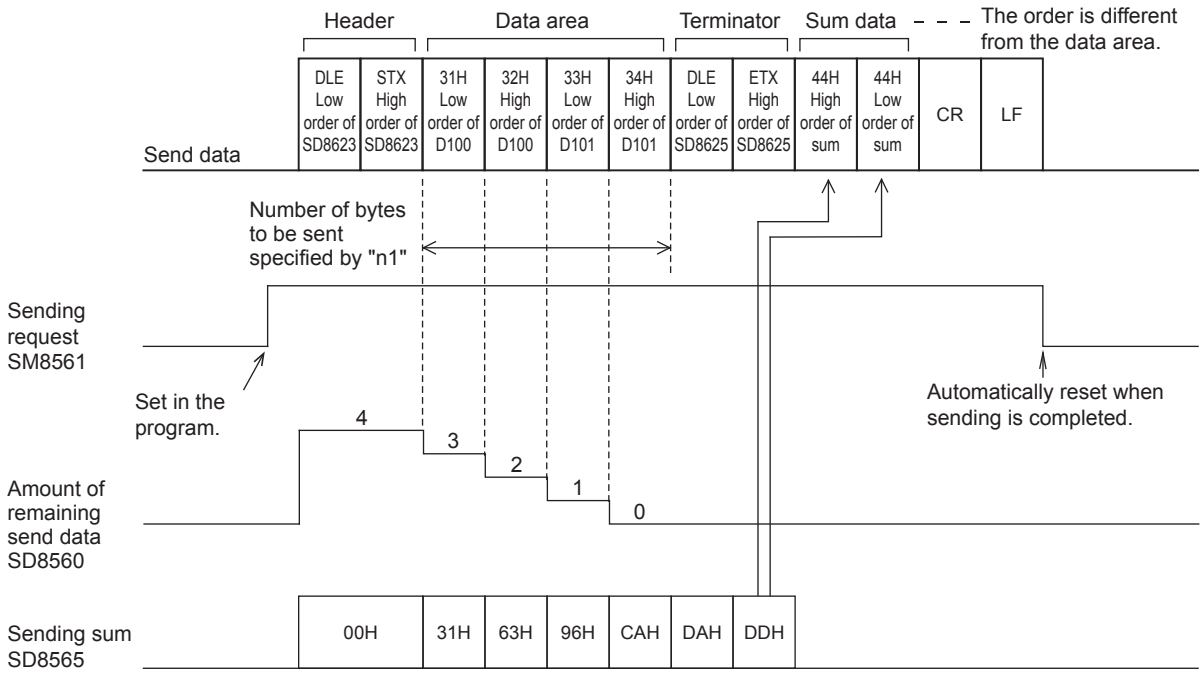

• Receive data and amount of data received

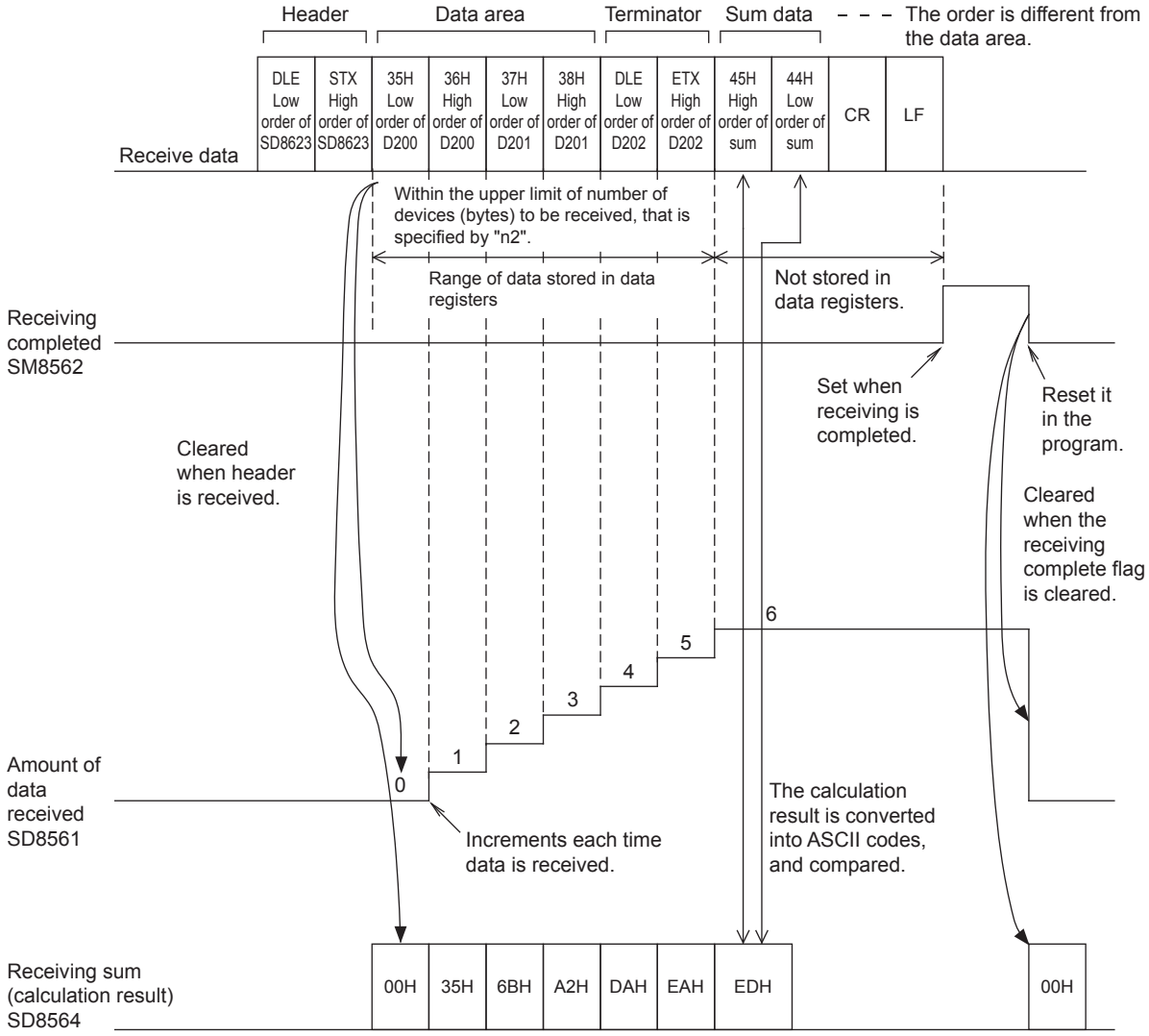

Precautions

When odd data is received, the higher-order 8 bits of data of the last device holds the data received previously.

■8-bit mode

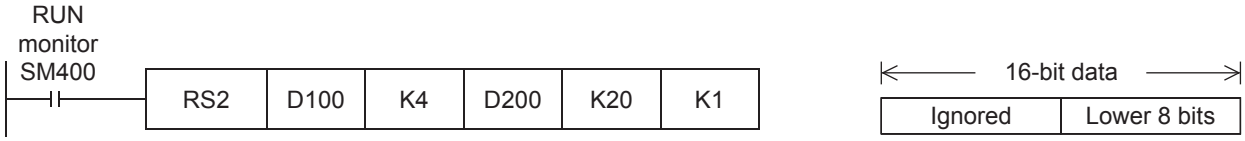

The upper 8 bits are ignored.
Only the lower 8 bits are valid.

Serial communication setting

- Header : [Added] [DLE + STX (SD8623: 0210H, SD8624: 0000H)]
- Terminator : [Added] [DLE + ETX (SD8625: 0310H, SD8626: 0000H)]
- Sum check code : [Added]
- Control procedure : [CR, LF added]
- Control mode : [None (RS-232C)]

- Send data and amount of remaining send data

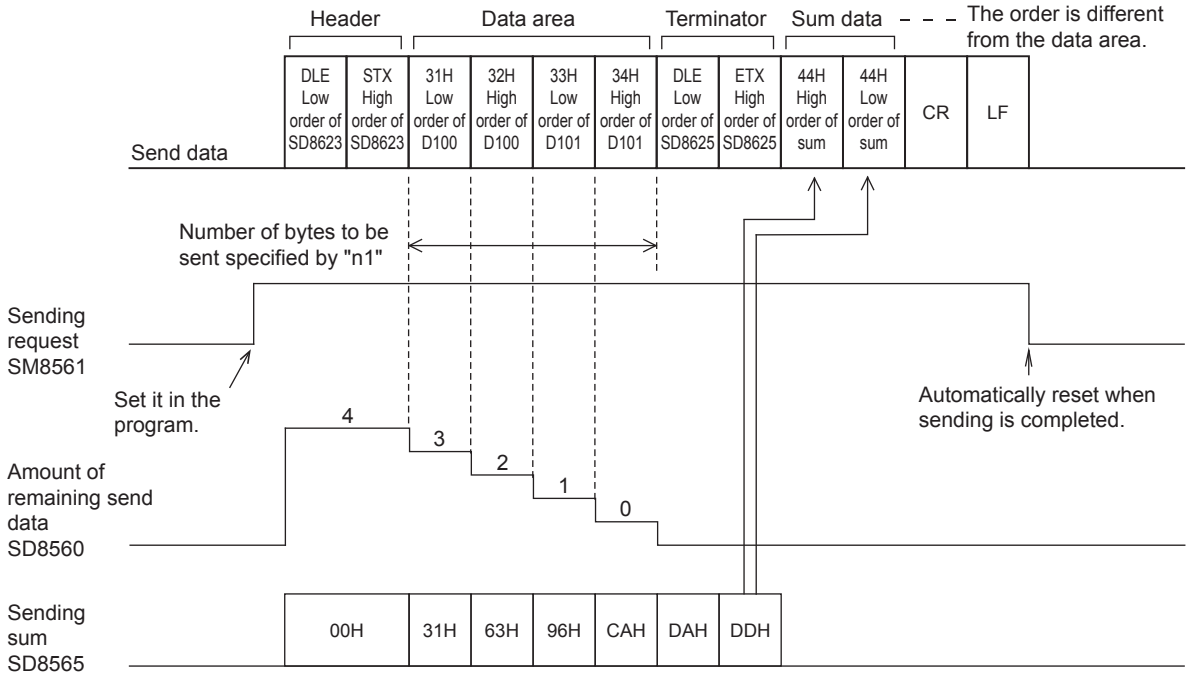

• Receive data and amount of data received

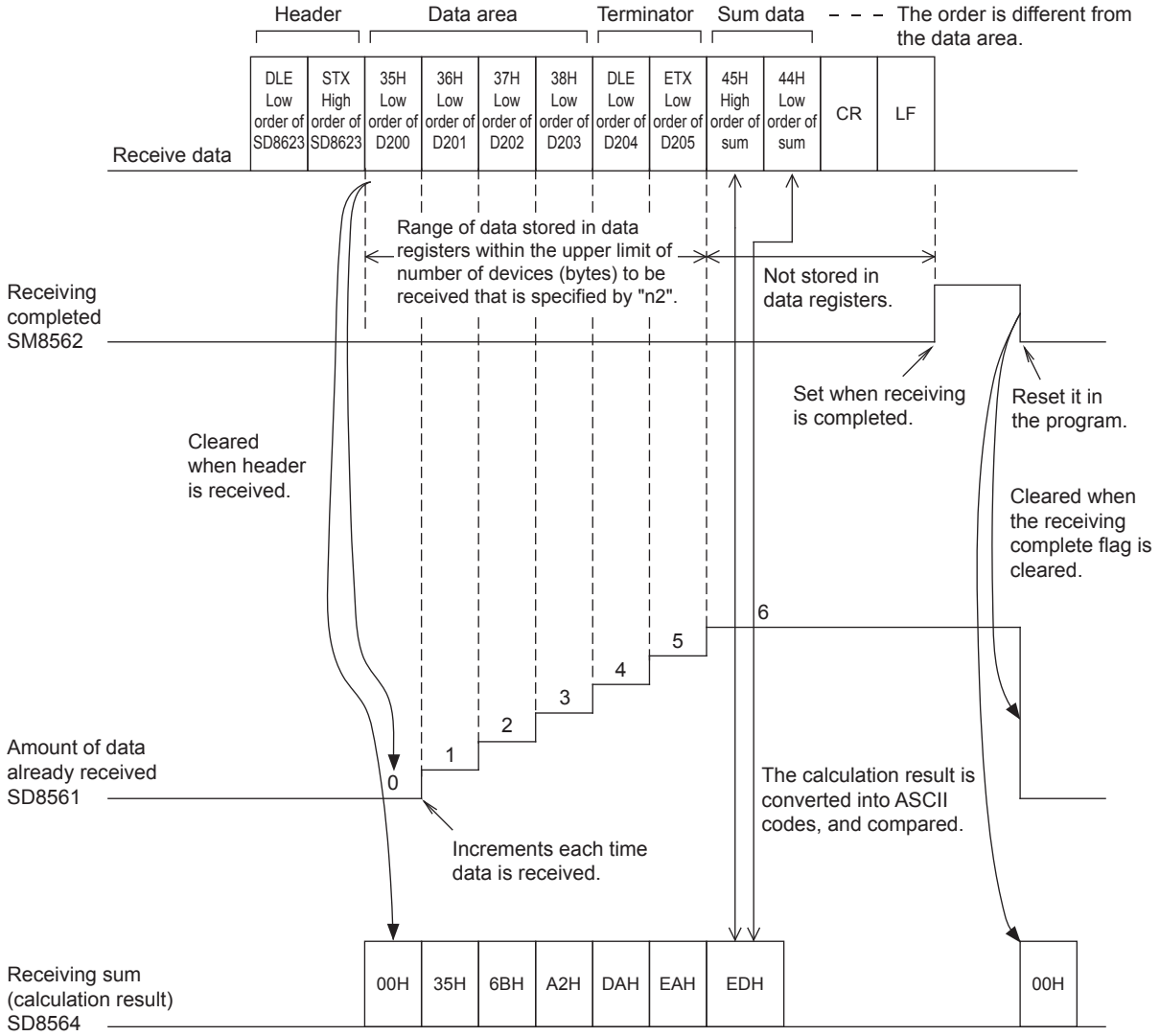

Precautions

The higher-order 8 bits of data of the receive data storage destination device holds the data previously received.

Operation during data send

When the sending request flag is set to ON while RS2 instruction is driven, the PLC sends the data stored in (s) to ((s)+(n1)-1).

Name	FX5 dedicated			
	CH1	CH2	CH3	CH4
Send request flag	SM8561	SM8571	SM8581	SM8591

When sending of the data is completed, the sending request flag is automatically set to OFF.

■Time at which sending is started

When RS2 instruction is executed after the sending request flag is set to ON, the PLC starts to send.

When sending is started, the PLC sends the data specified by RS2 instruction in interrupt processing regardless of the operation cycle.

■Time at which sending is completed

When all send data[*1] is sent, sending is completed.

*1 The terminators, sum check and CR+LF configured are also included.

■Precautions for sending

When sending data, please take care about the following.

- While the sending request flag is ON, do not change the amount of send data or the contents of the send data.
- Do not set the sending request flag to OFF in the program. If the send data is changed while the sending request flag (M8122) is ON or if the sending request flag (M8122) is set to OFF in the sequence program, correct data will not be sent.

Operation during data receive

When executing the RS2 instruction, the PLC waits to receive. When the PLC receives data from the counterpart equipment and receiving data is completed, the receiving completed flag turns ON.

Name	FX5 dedicated			
	CH1	CH2	CH3	CH4
Receiving completed flag	SM8562	SM8572	SM8582	SM8592

When the PLC receives data, it stores the received data to (d) to ((d)+(n2)-1).
While the receiving completed flag (M8123) is ON, the PLC cannot receive new data.

■Time at which receiving is started

When the PLC receives data while it is waiting, it starts receiving data.
When receiving begins, the PLC stores the received data in interrupt processing regardless of the operation cycle.
However, when the headers are specified in the communication settings, the PLC starts receiving when it continuously receives the codes set in the headers. The PLC stores the received data except the headers.

■Time at which receiving is completed

The time at which receiving is completed falls into the following 3 types. Receiving is completed when one of the following conditions is satisfied.

- When the PLC receives the amount of receive data specified by the RS2 instruction
- The terminators, sum check and CR+LF configured in the communication settings are received correctly.

• • • • • • Data	CR+LF		
• • • • • • Data	Terminator		
• • • • • • Data	Terminator	CR+LF	
• • • • • • Data	Terminator	Sum check	
• • • • • • Data	Terminator	Sum check	CR+LF

- When data receiving is suspended and the PLC does not receive the next data within the time-out time, the time-out flag turns ON.

■Operation of time-out flag

When data receiving is suspended, and the PLC does not receive the next within the time-out time, the time-out flag is set to ON.
At this time, the receiving completed flag is also set to ON.
The time-out time can be set within 1 to 32767 (ms). If the set value is outside the range, it operates as 10 ms.

Name	FX5 dedicated				FX3 Series compatible	
	CH1	CH2	CH3	CH4	CH1	CH2
Time-out flag	SM8565	SM8575	SM8585	SM8595	SM8409	SM8429
time-out time	SD8621	SD8631	SD8641	SD8651	—	

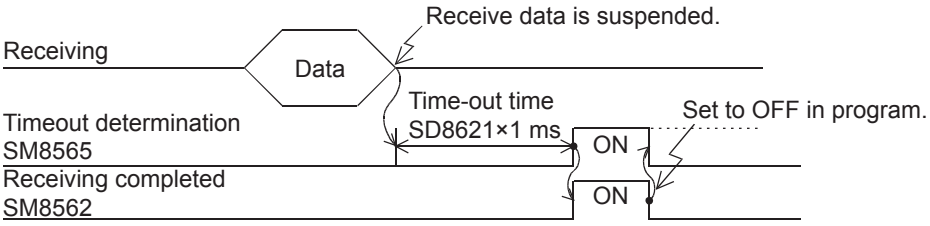

The time-out flag does not automatically turn OFF. Reset using program. While it remains ON, the PLC cannot receive the next set of data. When the receiving completed flag is set to OFF, the time-out flag is also set to OFF.
Using this function, the PLC can receive data from equipment where the amount of send data varies without the terminators.

■When the control line is set to interlink mode

When the interlink mode is set in the communication parameters, the following sequence is adopted from the start of receiving to completion:

1. When the amount of data already received becomes "preset amount of received data -30", the control line ER (DTR) turns OFF. When the control line ER (DTR) turns OFF, the external equipment should suspend data sending. After the control line ER (DTR) turns OFF, the PLC can receive up to 30 characters (bytes).
2. When the external equipment suspends data sending, the PLC sets the time-out check flag and receiving complete flag to ON after the preset time-out time setting. Move the received data in a sequence program, and then set the receiving complete flag and time-out check flag to OFF.
3. When the receiving complete flag is set to OFF, the control line ER (DTR) turns ON. When the control line ER (DTR) turns ON, restart data sending from the external equipment.
4. Repeat steps 1) to 3) until data receiving is completed.

■Precautions for receiving

When receiving data, please take care about the following.

- While the receiving completed flag is ON, the PLC cannot receive the next set of receive data. When the receiving completed flag is set to OFF, the PLC waits to receive.
- If the RS2 instruction is driven while the amount of received data "n2" is "0", the receiving completed flag turns ON. To make the PLC wait to receive, set the amount of received data (n2) to 1 or more, and set the receiving completed flag from ON to OFF.
- Set the amount of received data to a value including "terminators", "sum check" and "CR+LF". If the specified amount of received data is less, the serial communication error flag turns ON. When the terminator is set to [Do Not Add] in the communication settings, an error does not occur.

Full-duplex, bi-directional communication operation

■Send completed → start send operation

When sending of the data is completed, the sending request flag is automatically set to OFF.
When RS2 instruction is executed again after the sending request flag is set to ON, the PLC starts to send.

■Send completed → start receive operation

For full-duplex, bi-directional communication, send and receive can operate simultaneously.
For the operation timing of send completed and start receive, refer to the following.

- Operation during data send (☞ Page 169)
- Operation during data receive (☞ Page 170)

■Receive completed → start send operation

For full-duplex, bi-directional communication, send and receive can operate simultaneously.
For the operation timing of send completed and start receive, refer to the following.

- Operation during data send (☞ Page 169)
- Operation during data receive (☞ Page 170)

■Receive completed → start receive operation

Receiving completed flag turns ON when receiving is completed.
While the receiving completed flag is ON, the PLC cannot receive new data.
When the receiving completed flag is reset, the PLC waits to receive (the state where it can receive data).

Half-duplex, bi-directional communication operation

■Send completed → start send operation

When sending of the data is completed, the sending request flag is automatically set to OFF.

When RS2 instruction is executed again after the sending request flag is set to ON, the PLC starts to send.

■Send completed → start receive operation

For the operation timing of send completed and start receive, refer to the following.

- Operation during data send (☞ Page 169)
- Operation during data receive (☞ Page 170)

However, leave 100 μs or more time between send completed → start receive.

■Receive completed → start send operation

For the operation timing of send completed and start receive, refer to the following.

- Operation during data send (☞ Page 169)
- Operation during data receive (☞ Page 170)

■Receive completed → start receive operation

Receiving completed flag turns ON when receiving is completed.

While the receiving completed flag is ON, the PLC cannot receive new data.

When the receiving completed flag is reset, the next PLC waits to receive (the state where it can receive data).

Sum check code

The sum check code is a two-digit ASCII code converted from the least significant byte (8-bit) of the sum obtained by adding the corresponding data as hexadecimal numbers.

One can select whether to include the sum check in the message or not, using the communication settings.

- When "sum check code added" is selected, the sum check code is added in the message during sending. During receiving, the sum check code is compared with the value calculated from the received data to check the received data.
- When "sum check not added" is selected, the sum check code is not added, so the received data is not checked either. A calculation example of the sum check code is shown below.

Ex.

Serial communication settings

- Header: [Provided] [DLE+STX (SD8623: 0210H, SD3624: 0000H)]
- Terminator: [Provided] [DLE+ETX (SD8625: 0310H, SD3626: 0000H)]
- Sum check code: [Added]
- Control procedure: [CR, LF added]

■For send data

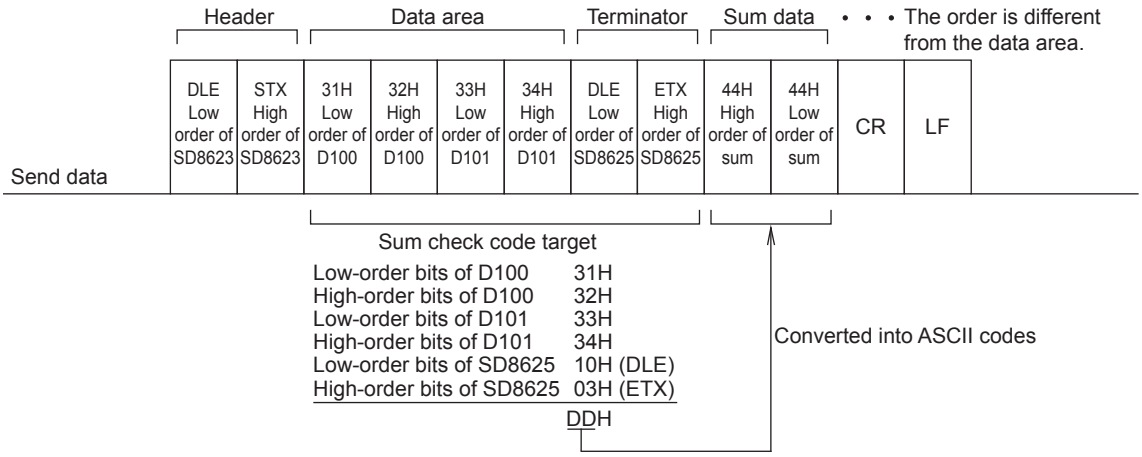

■For receive data

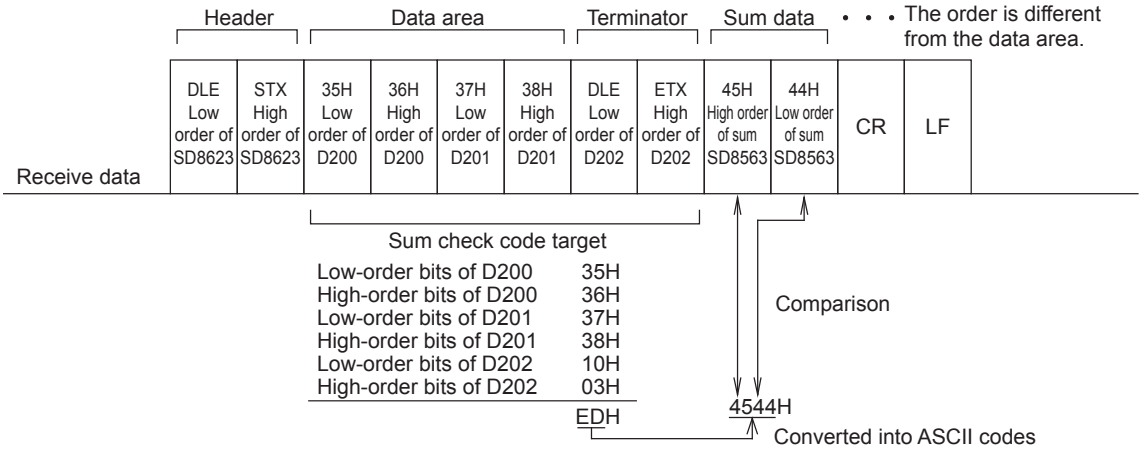

Operation of control line (RS-232C)

RS-232C communication is full-duplex, bi-directional communication. When using half-duplex, bi-directional communication, pay attention not to turn ON the sending request flag while receiving. If set to ON, the PLC starts to send and as a result, the counterpart equipment may not be able to receive data, and the sent and received data may be destroyed.
In full-duplex, bi-directional communication, the sending wait flag does not turn ON.
However, in the case that control is standard mode or interlink mode, the sending wait flag remains ON while DR (DSR) is OFF and the PLC is waiting to send.

Control line not used

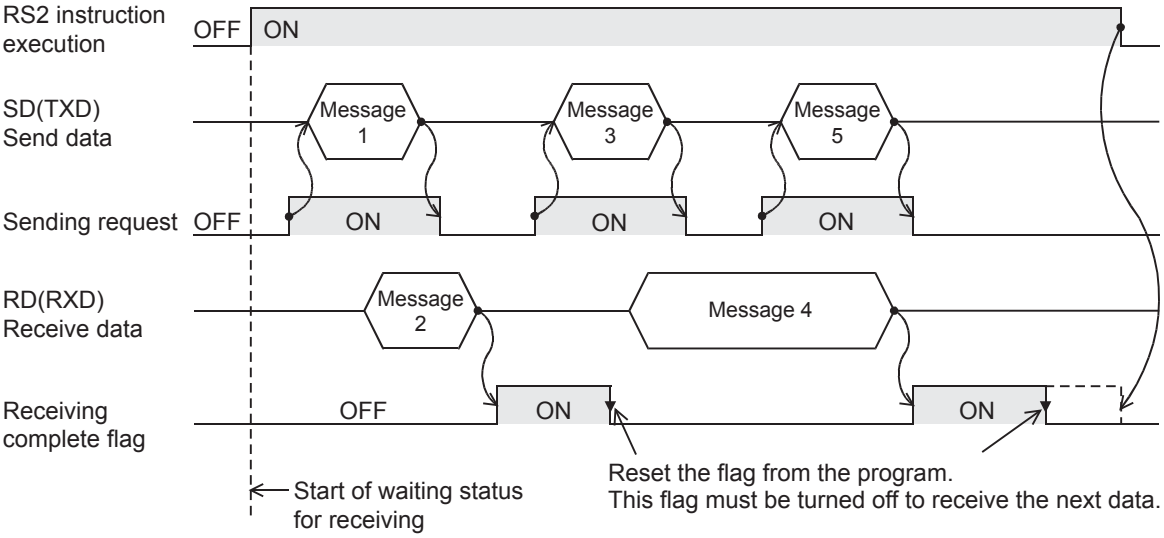

Normal mode

Use this mode for only sending or only receiving.

■Send only

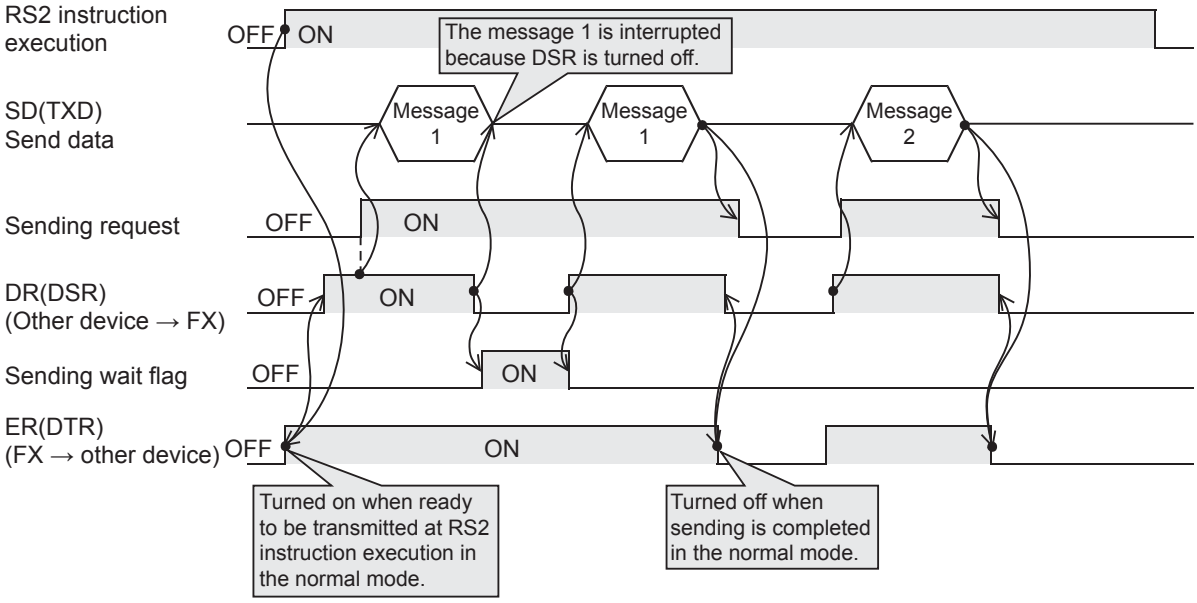

■Receive only

The DR (DSR) signal is not used.

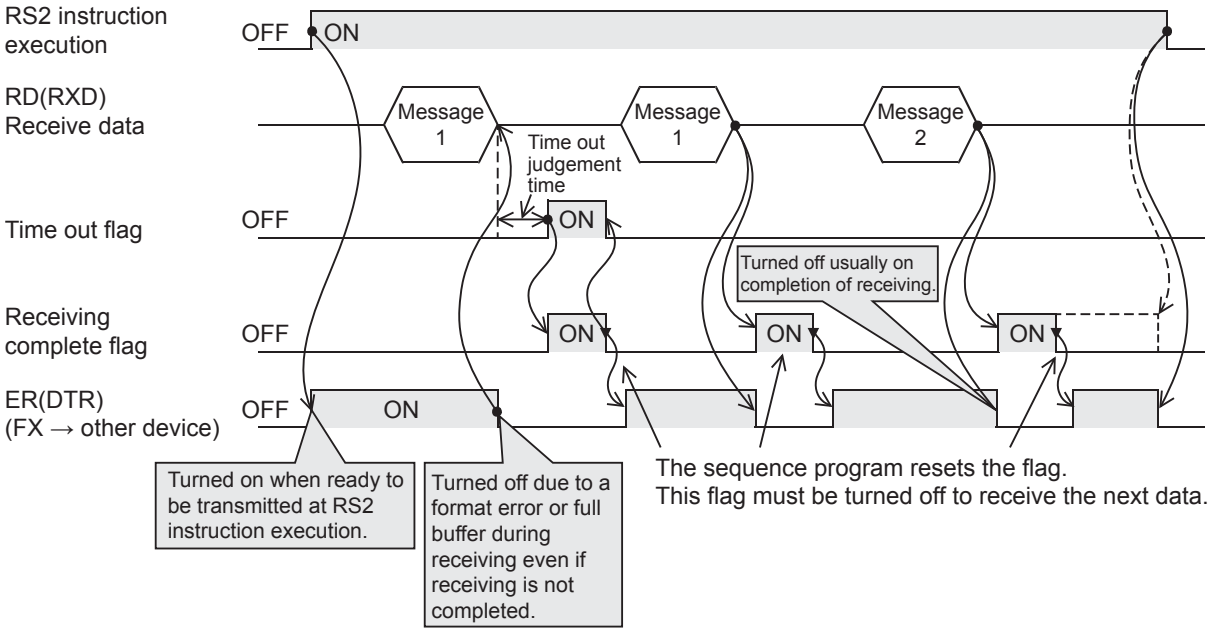

Modem mode

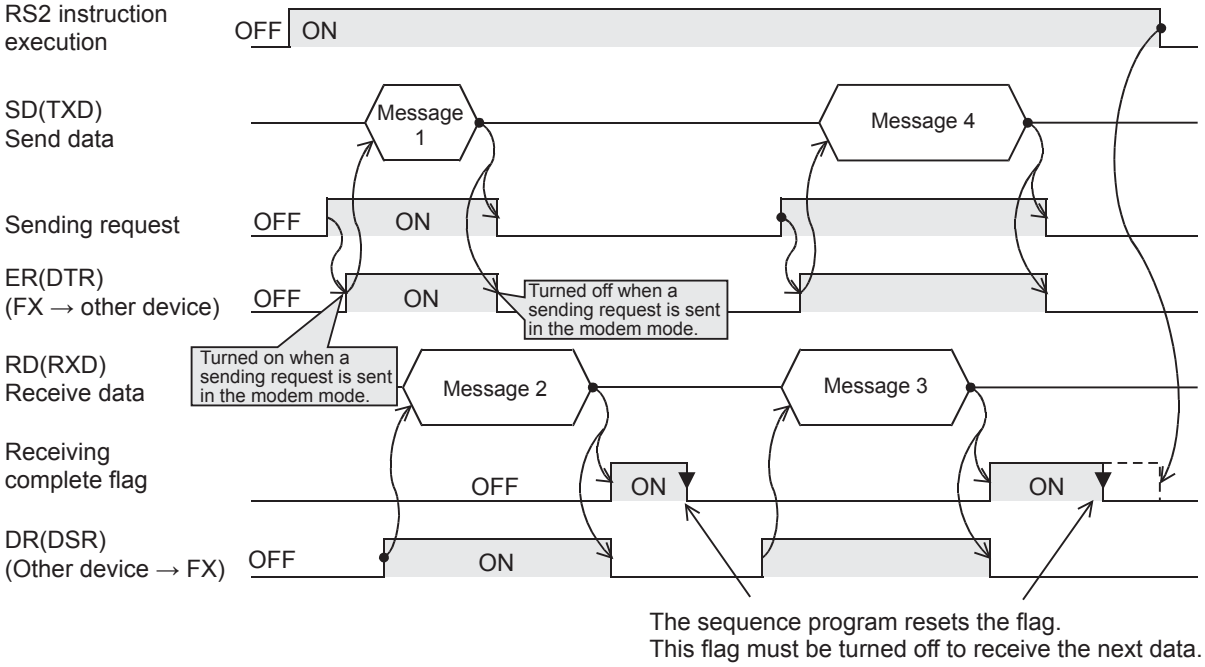

Interlink mode

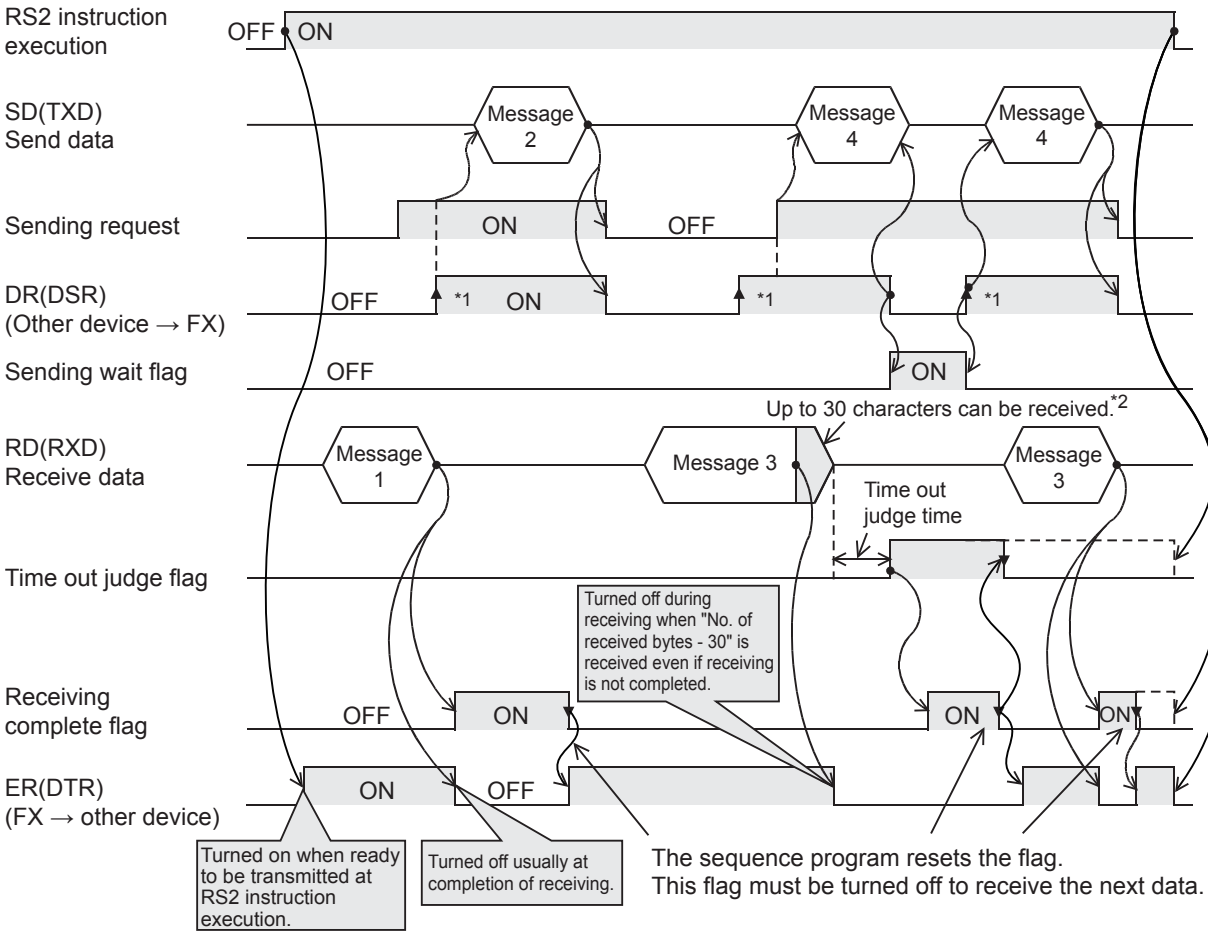

*1 On the external equipment side, set the DR (DSR) signal to ON when the external equipment is ready to receive.
The FX5 PLC sends the send data when both the DR (DSR) signal and the sending request turn ON.

*2 In the interlink mode, the PLC sets ER (DTR) to OFF when the amount of data already received becomes "Number of bytes to be received -30", and asks the external equipment to stop sending. After this send request, the PLC can only receive up to 30 characters and no more, so the external equipment temporarily stops sending, and then sends the remaining data after the ER (DTR) signal turns ON again.
When sending is stopped, the receiving complete flag turns ON after the time-out check time and receiving completes.
When sending is not stopped, the PLC finishes receiving after it has received the final send data or 30 characters. Accordingly, make sure that the amount of receive data is "30 + a".

Precautions for program creation

Using multiple RS2 instructions

The RS2 instructions can be used as many times as necessary in a program, but make sure that only one RS2 instruction is driven in each serial port at a time. For switching of the RS2 instruction used, make sure the OFF time is longer than one scan time.

Communication protocol setting

If protocol of communication settings (☞ Page 159) for the channel to be used is not set to "Non-protocol Communication", RS2 instructions cannot be used.

Using RS2 instruction together with another instruction

RS2 instruction cannot be used in the same serial port which is being used for any other communication (such as inverter communication).
(☞ Page 236 Combined Use of Serial Communication)

Control line interlink mode

In the interlink mode, set the amount of received data (n) to 31 or more. If it is set to 30 or less, the control line ER (DTR) is set to OFF as soon as the PLC receives data.

Using RS-485 half-duplex, bi-directional communication

Be sure to check the following.

- Leave 100 μs or more time between send completed → start receive.
- Do not turn ON the sending request flag while receiving.
- Since data cannot be received while sending, do not send data from the counterpart equipment to the PLC.
- When using header or terminator, set before driving the RS2 instruction. Accordingly, do not change the setting while the RS2 instruction is driven.

6.8 Troubleshooting

This chapter explains troubleshooting and error codes.

Checking communication status based on LED display

Check the status of the LED display of [RD] and [SD] on the CPU module or the communication board/communication adapter.

LED status		Operation status
RD	SD	
On	On	Data is being sent or received.
On	Off	Data is being received, but not being transmitted.
Off	On	Data is being transmitted, but not being received.
Off	Off	Data is neither being transmitted nor being received.

When normally sending and receiving data with non-protocol communication, the LEDs both flash brightly.
If they do not flash, check the wiring and the communication settings.

Checking installation

- Connection status

The communication cannot be operated if the PLC and the communication board/communication adapter are not connected correctly.
For the connection procedure, refer to the following.
📖MELSEC iQ-F FX5U User's Manual (Hardware)
📖MELSEC iQ-F FX5UC User's Manual (Hardware)

- Wiring

Verify that all communication equipment is correctly wired. (☞ Page 154 Wiring)

Checking sequence program

RS2 instruction cannot be used in the same serial port which is being used for any other communication (such as inverter communication). (☞ Page 236 Combined Use of Serial Communication)

Checking the communication settings

Verify that protocol type is "Non-protocol Communication". When the protocol type is not "Non-protocol Communication", communication will not function correctly. (☞ Page 159 Communication Settings)
After changing any communication setting, make sure to turn the PLC power from OFF→ON, or reset.

Caution on write during RUN, when RS2 instruction is driven

When the RS2 instruction is eliminated by writing during RUN, non-protocol communication stops immediately.

Checking absence/presence of errors

Serial communication error

■Error flags

If a communication error occurs in the non-protocol communication, the serial communication error flag turns ON.
Verify that the device specified in the table below is ON.

FX5 dedicated				FX3 Series compatible		Name	Description
CH1	CH2	CH3	CH4	CH1	CH2		
SM8500	SM8510	SM8520	SM8530	SM8063	SM8438	Serial communication error	Turns ON when an error occurs in serial communication.

■Error codes

When the serial communication error turns ON, the error code is stored in the corresponding device specified in the table below.

FX5 dedicated				FX3 Series compatible		Name	Description
CH1	CH2	CH3	CH4	CH1	CH2		
SD8500	SD8510	SD8520	SD8530	SD8063	SD8438	Serial communication error code	When a serial communication error occurs, the error code is stored.

The error codes (hexadecimal) stored in devices are shown as follows.

Error codes (hexadecimal)	Name	Description of error	Error handling
7010H	Parity error, overrun error or framing error	A parity error, overrun error or framing error occurred during communication.	When an error code is stored, check the following items: • Wiring • Communication settings
7200H	Communication data sum mismatch	Receive data sum mismatch.	
7201H	Incorrect data format	Incorrect data format • Character other than LF was received after CR in control procedure [CR, LR added]. • Character other than CR was received after the check sum in sum check code [Added] and control procedure [CR, LR added]. • The amount of data was greater than the set value. • CR, LF was received before the terminator.	

Operation error

■Error flags

The operation error flag turns ON when an operation error occurs in the RS2 instruction.
Verify that the device specified in the table below is ON.

FX5 dedicated				Name	Description
CH1	CH2	CH3	CH4		
SM0				Latest self-diagnostic error (Including the annunciator ON)	Turns ON when an operation error occurs.
SM1				Latest self-diagnostic error (Not including the annunciator ON)	
SM56, SM8067				Operation error	

■Error codes

When the operation error flag turns ON, the error code (hexadecimal) is stored in the operation error code (SD0/SD8067).
The error codes stored in the device are shown as follows.

Error codes (hexadecimal)	Name	Description of error	Error handling
2822H	A device was specified that cannot be specified with the instruction.	Wrong operand set for the RS2 instruction.	When an error code is stored, check the following items: • Program • Communication settings
3405H	Data was entered outside of the range that can be specified.	The operand device number range or data value set for the RS2 instruction is out of range.	
2820H	A device or label specified with the instruction was entered outside of the range that can be used.	The operand device number range or data value set for the RS2 instruction is out of range.	
1810H	Operation error	The same channel is used for more than one RS2 instruction.	
3600H	Operation error	Specified channel is not set in parameter.	

6.9 Related Devices

List of related devices

Special relays

■FX5 only

Device No.				Name	Description	R/W
CH1	CH2	CH3	CH4			
SM8500	SM8510	SM8520	SM8530	Serial communication error	Turns ON when an error occurs in serial communication.	R
SM8561	SM8571	SM8581	SM8591	Send request flag	When this device is set to ON, the PLC starts to send.	R/W
SM8562	SM8572	SM8582	SM8592	Receiving completed flag	This device turns ON when receiving is completed.	R/W
SM8563	SM8573	SM8583	SM8593	Carrier detection flag	This device turns ON in synchronization with the CD (DCD) signal.	R
SM8564	SM8574	SM8584	SM8594	DSR detection flag	This device turns ON in synchronization with the DR (DSR) signal.	R
SM8565	SM8575	SM8585	SM8595	Time-out flag	This device turns ON when data receiving is suspended and the next set of receive data is not given within the time set by the time-out time setting device.	R

R: Read only, R/W: Read/Write

■FX3 Series compatible

Device No.		Name	Description	R/W
CH1	CH2			
SM8063	SM8438	Serial communication error	Turns ON when an error occurs in serial communication.	R
SM8401	SM8421	Sending wait flag	This device remains ON while the PLC is waiting to send.	R
SM8404	SM8424	Carrier detection flag	This device turns ON in synchronization with the CD (DCD) signal.	R
SM8405	SM8425	DSR detection flag	This device turns ON in synchronization with the DR (DSR) signal.	R
SM8409	SM8429	Time-out flag	This device turns ON when data receiving is suspended and the next set of receive data is not given within the time set by the time-out time setting device.	R

R: Read only

Special registers

■FX5 only

Device No.				Name	Description	R/W
CH1	CH2	CH3	CH4			
SD8500	SD8510	SD8520	SD8530	Serial communication error code	Stores the error code when a serial communication error occurs.	R
SD8502	SD8512	SD8522	SD8532	Serial communication settings	Stores the setting of the communication parameter.	R
SD8560	SD8570	SD8580	SD8590	Amount of remaining send data	These devices store the amount of remaining send data.	R
SD8561	SD8571	SD8581	SD8591	Amount of data already received	This device stores the amount of received data.	R
SD8563	SD8573	SD8583	SD8593	Receive data sum	These devices store the received sum check value.	R
SD8564	SD8574	SD8584	SD8594	Receiving result sum	These devices store the sum check value calculated using the received data.	R
SD8565	SD8575	SD8585	SD8595	Sending sum	These devices store the sum check value added to the send data.	R
SD8621	SD8631	SD8641	SD8651	Time-out time	These devices store the time-out time set in the communication settings.	R/W
SD8622	SD8632	SD8642	SD8652	8-bit processing mode	These devices store the send/receive data processing mode set in the communication settings.	R/W
SD8623 SD8624	SD8633 SD8634	SD8643 SD8644	SD8653 SD8654	Header	These devices store the contents of headers 1 to 4 set in the communication settings.	R/W
SD8625 SD8626	SD8635 SD8636	SD8645 SD8646	SD8655 SD8656	Terminator	These devices store the contents of terminators 1 to 4 set in the communication settings.	R/W

Device No.				Name	Description	R/W
CH1	CH2	CH3	CH4			
SD8503	SD8513	SD8523	SD8533	Serial communication operation mode	This device stores the current communication mode being used.	R

R: Read only, R/W: Read/Write

■FX3 Series compatible

Device No.		Name	Description	R/W
CH1	CH2			
SD8063	SD8438	Serial communication error code	Stores the error code when a serial communication error occurs.	R
SD8402	SD8422	Amount of remaining send data	These devices store the amount of remaining send data.	R
SD8403	SD8423	Amount of data already received	This device stores the amount of received data.	R
SD8405	SD8425	Communication parameter display	Stores the setting of the communication parameter.	R
SD8414	SD8434	Receive data sum	These devices store the received sum check value.	R
SD8415	SD8435	Receiving result sum	These devices store the sum check value calculated using the received data.	R
SD8416	SD8436	Sending sum	These devices store the sum check value added to the send data.	R
SD8419	SD8439	Serial communication operation mode	This device stores the current communication mode being used.	R

R: Read only

Details of related devices

The devices described below are used in non-protocol communication.

The "FX3 Series-compatible" device operates only the channel which is specified in the SM/SD settings of communication setting (☞ Page 159).

Serial communication error

Turns ON when an error occurs in serial communication. These flags are for check of the serial communication error.

FX5 dedicated				FX3 Series compatible		Description	R/W
CH1	CH2	CH3	CH4	CH1	CH2		
SM8500	SM8510	SM8520	SM8530	SM8063	SM8438	Turns ON when an error occurs in serial communication.	R

R: Read only

After a device above turns ON, the error code is stored in the corresponding device below.

FX5 dedicated				FX3 Series compatible		Name	Description
CH1	CH2	CH3	CH4	CH1	CH2		
SD8500	SD8510	SD8520	SD8530	SD8063	SD8438	Serial communication error code	When a serial communication error occurs, the error code is stored.

Precautions

Do not turn ON or OFF with program or engineering tool.

Serial communication error does not turn OFF even if the communication is restored to normal state. The devices turn OFF when power is turned OFF→ON, RUN→STOP, reset or SM50 (Error Detection Reset Completion) is turned ON.

Sending wait flag

These devices remain ON while the PLC is waiting to send.

FX5 dedicated				FX3 Series compatible		Description	R/W
CH1	CH2	CH3	CH4	CH1	CH2		
SM8560	SM8570	SM8580	SM8590	SM8401	SM8421	These devices turn ON when serial communication is waiting to send.	R

R: Read only

- For RS-232C

While the control line is set to the standard or interlink mode in the communication parameter, when the control line DR (DSR) turns OFF while sending data, the sending wait flag turns ON.

- For RS-485

The sending wait flag does not turns ON.

Precautions

When setting these devices to ON, set the drive condition with a pulse.

Send request flag

When these devices are set to ON by SET instruction, the PLC starts to send. When sending of the data is completed, the sending request flag is automatically reset.

FX5 dedicated				Description	R/W
CH1	CH2	CH3	CH4		
SM8561	SM8571	SM8581	SM8591	When set to ON, serial communication data sending starts. Set to ON with the SET instruction.	R/W

R/W: Read/Write

Precautions

When setting these devices to ON, set the drive condition with a pulse.

Receiving completed flag

Receiving completed flag turns ON when receiving is completed. When these devices turn ON, data cannot be received.

FX5 dedicated				Description	R/W
CH1	CH2	CH3	CH4		
SM8562	SM8572	SM8582	SM8592	These devices turn ON when serial communication data receiving is complete.	R/W

R/W: Read/Write

Receiving is completed in one of the following three conditions.

- When the PLC receives the amount of receive data specified by the RS2 instruction
- When the terminators are set, and the PLC receives the code set by the terminator
- When data receiving is suspended and the PLC does not receive the next set of data within the time set by the time-out time setting device

When the receiving completed flag turns ON, transfer the received data to another storage destination, and then set this flag to OFF.

When this flag is set to OFF, the PLC waits to receive.

Precautions

When the RS2 instruction is driven while the amount of receive data is set to "0", the PLC does not wait to receive. To make the PLC wait to receive, it is necessary to set the amount of receive data to "1" or more and set the receiving completed flag ON→OFF.

Carrier detection flag

These devices turn ON/OFF in synchronization with the CD (DCD) signal.

FX5 dedicated				FX3 Series compatible		Description	R/W
CH1	CH2	CH3	CH4	CH1	CH2		
SM8563	SM8573	SM8583	SM8593	SM8404	SM8424	When the CD (DCD) signal of the counterpart device that is communicating via communication is turned ON, this synchronizes with it and turns ON.	R

R: Read only

While the carrier detection flag is ON, data can be sent and received.

Precautions

Do not turn ON or OFF with program or engineering tool.

DSR detection flag

These devices turn ON/OFF in synchronization with the DR (DSR) signal. The state of DR (DSR) signal can be checked when executing RS2 instruction.

FX5 dedicated				FX3 Series compatible		Description	R/W
CH1	CH2	CH3	CH4	CH1	CH2		
SM8564	SM8574	SM8584	SM8594	SM8405*1	SM8425*1	When the DR (DSR) signal of the counterpart device that is communicating via communication is turned ON, this synchronizes with it and turns ON.	R

R: Read only

*1 The device is updated during END processing.

Precautions

Do not turn ON or OFF with program or engineering tool.

Time-out flag

This turns ON when data receiving is suspended, and the next set of receive data is not received within the time set by the time-out time setting device.

FX5 dedicated				FX3 Series compatible		Description	R/W
CH1	CH2	CH3	CH4	CH1	CH2		
SM8565	SM8575	SM8585	SM8595	SM8409	SM8429	This turns ON when receiving is not restarted within the specified time-out time setting when data receiving is interrupted.	R

R: Read only

The time-out time corresponding to the above devices is stored in the following devices.

FX5 dedicated				FX3 Series compatible		Name	Description
CH1	CH2	CH3	CH4	CH1	CH2		
SD8621	SD8631	SD8641	SD8651	SD8409	SD8429	time-out time	1 to 32767 (ms) 10 ms when set to a value outside the range.

The time-out flag turns OFF when the PLC waits to receive.
Using this function, the PLC can receive data from equipment where the amount of send data varies, without the terminators.

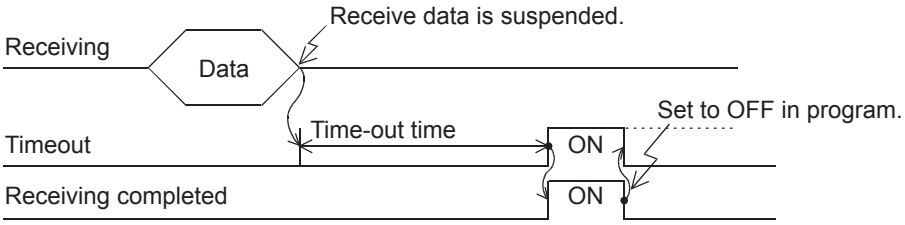

The time-out check is judged in END processing based on a 1 ms free counter set when the data receiving starts and the time-out flag is turned ON. A lag of maximum 1 scan time occurs due to processing in the END processing.

Precautions

Do not turn ON or OFF with program or engineering tool.

Serial communication error code

When a serial communication error occurs, these devices store the corresponding error codes (☞ Page 178).

FX5 dedicated				FX3 Series compatible		Description	R/W
CH1	CH2	CH3	CH4	CH1	CH2		
SD8500	SD8510	SD8520	SD8530	SD8063	SD8438	When a serial communication error occurs, the error code is stored.	R

R: Read only

Precautions

Do not change the value with program or engineering tool.
Serial communication error code is not cleared even after communication is restored to normal state. They are cleared by turning the PLC power OFF→ON, RUN→STOP, reset or by SM50 (Error Detection Reset Completion) is turned ON.

Serial communication settings

The communication parameters set in the communication settings are stored when the power is turned OFF→ON or the reset. (☞ Page 159 Communication Settings)

FX5 dedicated				Description	R/W
CH1	CH2	CH3	CH4		
SD8502	SD8512	SD8522	SD8532	Stores the setting of the communication parameter.	R

R: Read only

The descriptions of the communication parameters are as follows.

Bit No.	Name	Description	
		0 (bit = OFF)	1 (bit = ON)
b0	Data length	7 bits	8 bits
b1 b2	Parity bit	b2, b1 (0, 0): Not provided (0, 1): Odd (1, 1): Even	
b3	Stop bit	1 bit	2 bits

Bit No.	Name	Description	
		0 (bit = OFF)	1 (bit = ON)
b4 b5 b6 b7	Baud rate	b7, b6, b5, b4 (0,0,1,1): 300 bps (0,1,0,0): 600 bps (0,1,0,1): 1200 bps (0,1,1,0): 2400 bps (0,1,1,1): 4800 bps (1,0,0,0): 9600 bps (1,0,0,1): 19200 bps (1,0,1,0): 38400 bps (1,0,1,1): 57600 bps (1,1,0,1): 115200 bps	
b8	Header	Not added	Added
b9	Terminator	Not added	Added
b10 b11 b12	Control mode	b12, b11, b10 (0, 0, 0): Not provided <RS-232C interface> (0, 0, 1): Standard mode <RS-232C interface> (0, 1, 0): Interlink mode <RS-232C interface> (0, 1, 1): Modem mode <RS-232C interface> (1,1,0): RS-485 full-duplex, bi-directional <RS-485 interface> (1,1,1): RS-485 half-duplex, bi-directional <RS-485 interface>	
b13	Sum check	Not added	Added
b14*1	Protocol	Not used	Used
b15	CR, LF	CR and LF are not added	CR/LF added

*1 When using non-protocol communication, 0 (fixed).

Precautions

Do not change the value with program or engineering tool.
They are cleared by turning the PLC power OFF→ON, RUN→STOP or by resetting the system.

Amount of remaining send data

This stores the amount of remaining send data. These devices store the counted value in 8-bit (1 byte) units.

FX5 dedicated				FX3 Series compatible		Description	R/W
CH1	CH2	CH3	CH4	CH1	CH2		
SD8560	SD8570	SD8580	SD8590	SD8402	SD8422	These devices store the amount of remaining send data.	R

R: Read only

Precautions

Do not change the value with program or engineering tool.

Amount of data received

This stores the amount of data already received. These devices store the counted value in 8-bit (1 byte) units.

FX5 dedicated				FX3 Series compatible		Description	R/W
CH1	CH2	CH3	CH4	CH1	CH2		
SD8561	SD8571	SD8581	SD8591	SD8403	SD8423	These devices store the amount of data already received.	R

R: Read only

Precautions

Do not change the value with program or engineering tool.

Communication parameter display

The communication parameter content set in the communication settings (☞ Page 159) is stored when the power is turned OFF → ON or reset. The stored values are the same as the serial communication property values. (☞ Page 183)

FX3 Series compatible		Description	R/W
CH1	CH2		
SD8405	SD8425	Stores the setting of the communication parameter.	R

R: Read only

Precautions

Do not change the value with program or engineering tool.

Receive data sum

These devices store the received sum check value. When the sum check code is set to [Added] in the communication settings (☞ Page 159), the sum check is executed for the receive data. These devices store the sum added to the received data sent from the counterpart equipment.

FX5 dedicated				FX3 Series compatible		Description	R/W
CH1	CH2	CH3	CH4	CH1	CH2		
SD8563	SD8573	SD8583	SD8593	SD8414	SD8434	These devices store the received sum check value.	R

R: Read only

Precautions

Do not change the value with program or engineering tool.
When the sum check code is set to [Added] in the communication settings, always select [Added] for the terminator.

Receiving result sum

When the sum check code is set to [Added] in the serial communication settings (☞ Page 159), the sum check is executed for the receive data. These devices store the sum calculated by the CPU module from the data received from the counterpart equipment.

FX5 dedicated				FX3 Series compatible		Description	R/W
CH1	CH2	CH3	CH4	CH1	CH2		
SD8564	SD8574	SD8584	SD8594	SD8415	SD8435	These devices store the sum check value calculated using the received data.	R

R: Read only

Precautions

Do not change the value with program or engineering tool.
When the sum check code is set to [Added] in the communication settings, always select [Added] for the terminator.

Sending sum

When the sum check code is set to [Added] in the communication settings (☞ Page 159), the sum check is executed for the send data. These devices store the sum calculated by the CPU module from the send data.

FX5 dedicated				FX3 Series compatible		Description	R/W
CH1	CH2	CH3	CH4	CH1	CH2		
SD8565	SD8575	SD8585	SD8595	SD8415	SD8435	These devices store the sum check value added to the send data.	R

R: Read only

Precautions

Do not change the value with program or engineering tool.
When the sum check code is set to [Added] in the communication settings, always select [Added] for the terminator.

Time-out time

These devices set the evaluation time for error when receiving of data is interrupted. (Unit: ms)

FX5 dedicated				Description	R/W
CH1	CH2	CH3	CH4		
SD8621	SD8631	SD8641	SD8651	1 to 32767 (ms) 10 ms when set to a value outside the range.	R/W

R/W: Read/Write

Precautions

Do not change the time-out time setting while the RS2 instruction is being driven. To change the value, do so before the RS2 instruction is driven (while off). The change is enabled when the RS2 instruction is driven.

8-bit processing mode

These devices store the value for the processing mode set in the communication settings (☞ Page 159).

FX5 dedicated				Description	R/W
CH1	CH2	CH3	CH4		
SD8622	SD8632	SD8642	SD8652	0: 16-bit processing mode 1: 8-bit processing mode	R/W

R/W: Read/Write

Precautions

Do not change the 8-bit processing mode while the RS2 instruction is being driven. To change the value, do so before the RS2 instruction is driven (while off). The change is enabled when the RS2 instruction is drive.
They are cleared by turning the PLC power OFF→ON, RUN→STOP or by resetting the system.

Header

These devices store the contents of headers 1 to 4 set in the communication settings (☞ Page 159). When the headers are set to [Added] in the communication settings, the headers are added to the send and receive data. Up to four headers can be added in each channel.

Header	FX5 dedicated				R/W
	First header	Second header	Third header	Fourth header	
CH1	SD8623 (Low-order byte)	SD8623 (High-order byte)	SD8624 (Low-order byte)	SD8624 (High-order byte)	R/W
CH2	SD8633 (Low-order byte)	SD8633 (High-order byte)	SD8634 (Low-order byte)	SD8634 (High-order byte)	
CH3	SD8643 (Low-order byte)	SD8643 (High-order byte)	SD8644 (Low-order byte)	SD8644 (High-order byte)	
CH4	SD8653 (Low-order byte)	SD8653 (High-order byte)	SD8654 (Low-order byte)	SD8654 (High-order byte)	

R/W: Read/Write

When data is sent, the data set in the headers is added at the head of the specified send data.
When data is received, data receiving begins when the data set in the headers is received.

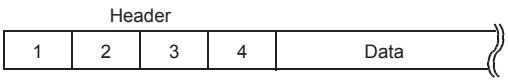

Precautions

Even if the headers are set to [Added] in the communication settings, if the first header value is "00H", this is the [Do Not Add] state. The area before "00H" (in 1-byte units) is used to set the headers.
Do not change the headers while the RS2 instruction is being driven. To change the value, do so before the RS2 instruction is driven (while off). The change is enabled when the RS2 instruction is drive.
They are cleared by turning the PLC power OFF→ON, RUN→STOP or by resetting the system.

Terminator

These devices store the contents of terminators 1 to 4 set in the communication settings (☞ Page 159). When the terminators are set to [Added] in the communication settings, the terminators are added to the send and receive data. Up to four terminators can be added in each channel.

Terminator	FX5 dedicated				R/W
	First	Second	Third header	Fourth	
CH1	SD8625 (Low-order byte)	SD8625 (High-order byte)	SD8626 (Low-order byte)	SD8626 (High-order byte)	R/W
CH2	SD8635 (Low-order byte)	SD8635 (High-order byte)	SD8636 (Low-order byte)	SD8636 (High-order byte)	
CH3	SD8645 (Low-order byte)	SD8645 (High-order byte)	SD8646 (Low-order byte)	SD8646 (High-order byte)	
CH4	SD8655 (Low-order byte)	SD8655 (High-order byte)	SD8656 (Low-order byte)	SD8656 (High-order byte)	

R/W: Read/Write

When data is sent, the data set in the terminators is added at the end of the specified send data, and data send.
When data is received, receiving is completed when the data set in the terminators is received.

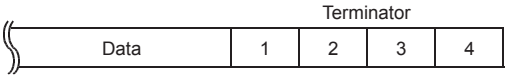

Precautions

Even if the terminators are set to [Added] in the serial communication settings, if the first terminator value is "00H", this is the [Do Not Add] state. The area before "00H" (in 1-byte units) is used to set the terminators.
Do not change the terminators while the RS2 instruction is being driven. To change the value, do so before the RS2 instruction is driven (while off). The change is enabled when the RS2 instruction is drive.
They are cleared by turning the PLC power OFF→ON, RUN→STOP or by resetting the system.

Serial communication operation mode

Stores the communication function code used in the serial communication under execution.

FX5 dedicated				FX3 Series compatible		Description	R/W
CH1	CH2	CH3	CH4	CH1	CH2		
SD8503	SD8513	SD8523	SD8533	SD8419	SD8439	0: MELSOFT Connection or MC protocol 3: N:N Network Communication 5: Non-protocol Communication 6: Parallel Link Communication 7: Inverter Communication 9: MODBUS RTU Communication 12: Predefined protocol support Other than above: Not used	R

R: Read only

Precautions

Do not change the value with program or engineering tool.
These devices store "5" while RS2 instruction is being driven or not, as long the communication mode has not changed.

7 PREDEFINED PROTOCOL SUPPORT FUNCTION

This chapter describes predefined protocol support function (serial communication protocol support function).
For details about built-in Ethernet protocol support function, refer to 📖MELSEC iQ-F FX5 User's Manual (Ethernet Communication).

7.1 Function Summary

With predefined protocol support function, data can be sent and received between the counterpart device and CPU module according to the protocol of the counterpart device.
Predefined protocol support function uses the S(P).CPRTCL instruction.
The S(P).CPRTCL instruction can simultaneously communicate on 2 channels by specifying the channels.

- Up to eight protocols can be executed consecutively. (1 send packet, 16 receive packets in one protocol)
- The protocol can use the general-purpose protocol library, which is pre-registered in the serial communication protocol support tool. Additional protocols can be registered.
- Data transfer is enabled when the connected equipment supports non-protocol serial communication.
- The overall distance is 1200 m maximum. (Applies only when configured by FX5-485ADP)

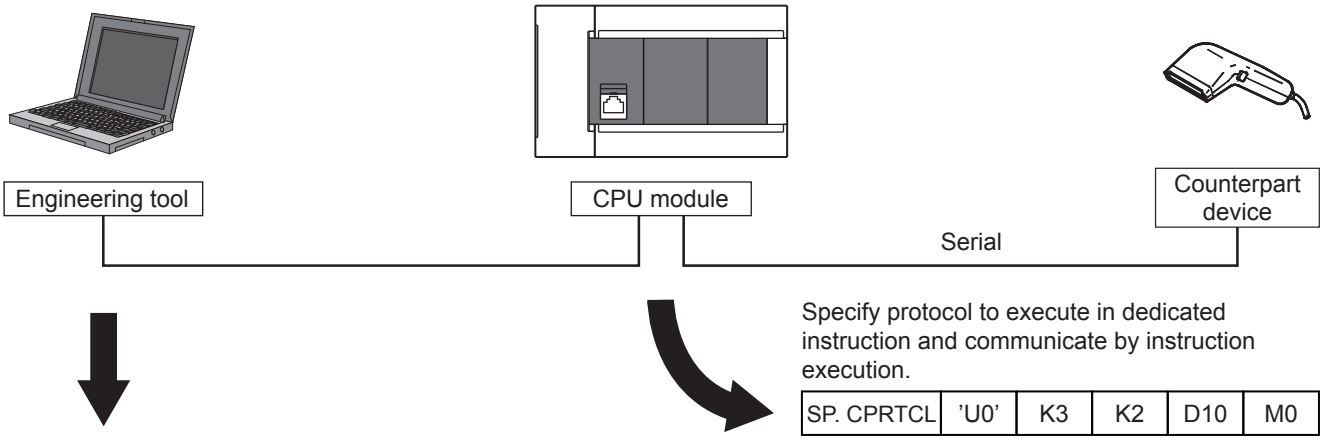

Set the necessary protocol, and write in protocol setting data to the CPU module.

Protocol No.	Manufacturer	Model	Protocol Name	Communication Type	→Send ←Receive	Packet Name	Packet Setting
1	MITSUBISHI ELECTRIC	FREQROL Series	H7B:RD Operation Mode	Send&Receive			
					→	H7B:RD Operation Mode	Variable Set
					←(1)	NOR:RD Data(4 Digits Data)	Variable Set
					←(2)	ERR:NAK Response	Variable Set
2	MITSUBISHI ELECTRIC	FREQROL Series	HFB:WR Operation Mode	Send&Receive			
					→	HFB:WR Operation Mode	Variable Set
					←(1)	ACK:ACK Response	Variable Set
					←(2)	ERR:NAK Response	Variable Set
3	MITSUBISHI ELECTRIC	FREQROL Series	H6F:RD Out Frequency/Speed	Send&Receive			
⋮							

7.2 Procedure before Operation

The flow chart below shows the Predefined Protocol Support Function setting and sequence program creation procedure up until communication with a counterpart device:

1. Check communication specifications

For communication specifications, and predefined protocol specifications, refer to ☞ Page 190 Specifications.

2. System configuration and selection

For system configuration, and select communication equipment, refer to ☞ Page 189 System Configuration.

3. Wiring

For selection of cables and connection equipment, and wiring example, refer to non-protocol communication (☞ Page 154 Wiring).

4. Communication settings

For communication settings of communication device, refer to ☞ Page 191 Communication Settings.

5. Protocol settings

For each protocol settings, refer to ☞ Page 193 Protocol Setting, ☞ Page 198 Packet Setting.

6. Program creation

For detailed explanation of related devices, and basic program, refer to ☞ Page 215 Programming.

7.3 System Configuration

This section outlines the system configuration required to use predefined protocol support function.

You can use the predefined protocol support function in the CPU module using the built-in RS-485 port, communication board, and communication adapter.

Allotment of serial ports is set to the following fixed numbers, regardless of system configuration.

■FX5U CPU module

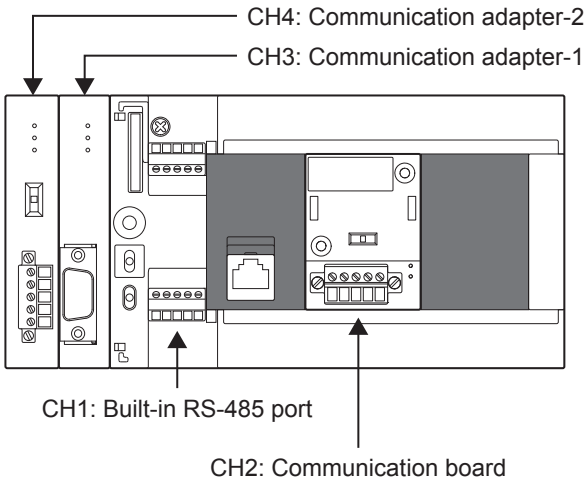

■FX5UC CPU module

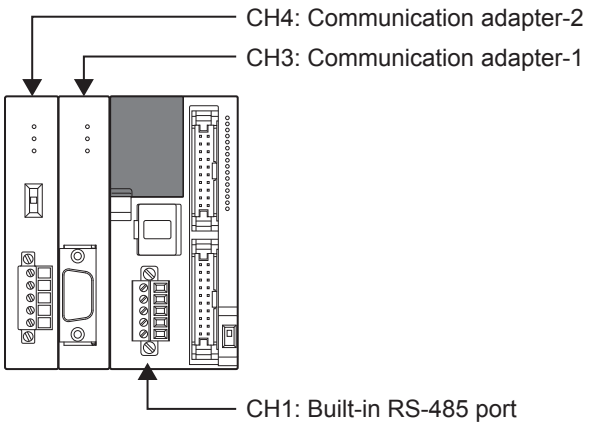

Communication device

		Serial port	Important points for selection	Overall distance
Built-in RS-485 port		CH1	Since it is built-into the CPU module, there is no need to add equipment.	50 m or less
Communication board	FX5-485-BD	CH2	Mounted on top of the CPU module, there is no change in the installation space requirements.	50 m or less
	FX5-232-BD			15 m or less
Communication adapter	FX5-485ADP	CH3, CH4*1	Mount the communication adapter to the left of the CPU module.	1200 m or less
	FX5-232ADP			15 m or less

*1 Assigned to CH3 or CH4 in order of proximity to CPU module.

Point

In predefined protocol support function, only two channel is available to use for one CPU module.

7.4 Specifications

This section describes the communication specifications and performance of predefined protocol support function.

Communication specifications

Items		Specifications	
Transmission standard		RS-485 and RS-422 standard	RS-232C standard
Maximum overall distance		When FX5-485ADP is used: 1200 m or less When using built-in RS-485 port or FX5-485-BD: 50 m or less	15 m or less
Protocol type		Predefined protocol support	
Control procedure		—	
Communication method		Half-duplex, bi-directional communication	
Baud rate		9600, 19200, 38400, 57600, 115200 bps	
Character format	Start bit	—	
	Data length	7 bits/8 bits	
	Parity bit	None, odd or even	
	Stop bit	1 bit/2 bits	
Header		Can set it from packet setting.	
Terminator		Can set it from packet setting.	
Control line		—	
Sum check		Can set it from packet setting.	

Predefined protocol specifications

Items	Specifications	Items
Setting method	• Selected from the predefined protocol library offered • Selected from the user protocol library • Creating	By editing the selected protocol, a new protocol can be created.
Number of protocols	Maximum of 64	—
Number of packets	Maximum of 128	One send packet and 16 receive packets can be registered in one protocol.
Number of elements	Maximum of 32	—
Packet data area size	Maximum of 6144 byte	—
Communication type	Send only/receive only/send & receive	☞ Page 191 Communication type
Execution procedure	Protocols can be executed with a dedicated instruction (S(P).CPRTCL).	Up to eight protocols can be executed consecutively for one instruction execution.
Receive wait time	0 to 3000000 ms	When set 0 ms, timeout does not occur.
Number of send retries	0 to 10	—
Send retry interval	0 to 300000 ms	—
Standby time	0 to 300000 ms	—

Items	Specifications	Items
Monitoring time	0 to 300000 ms	When set 0 ms, timeout does not occur.
Communication data code	Binary/ASCII	—
The maximum data length that can be sent/received at one time.	2048 byte	—

Communication type

With the predefined protocol support function, communications with counterpart devices are performed using the following procedures (communication types).

Communication type name	Processing
Send Only	Sends a send packet once. One send packet is required.
Receive Only	Receives a packet if it matches any of up to 16 defined receive packets. One or more receive packets are required.
Send & Receive	Sends a send packet, and then receives a packet if it matches any of up to 16 defined receive packets. One send packet and one or more receive packets are required.

For the operation of each communication type, refer to ☞ Page 237 Operation image of each communication type.

Packet

A send packet to the counterpart devices and a receive packet from the counterpart devices at the time of process execution are registered in a protocol.
For details of packet elements, refer to ☞ Page 198 Packet Setting.

Ex.
Example of a packet configuration

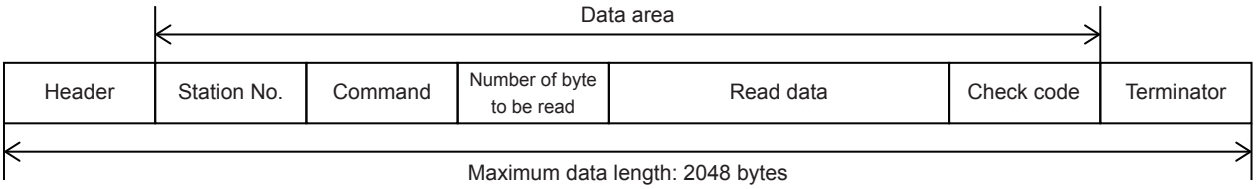

7.5 Communication Settings

For the FX5 Series communication settings of this function, parameters are set using GX Works3. For details about GX Works3, refer to 📖GX Works3 Operating Manual.
Setting of parameter differs according to the module used. The procedure for each module is as follows.

Built-in RS-485 port (CH1)

Navigation Window ⇨ Parameter ⇨ FX5UCPU⇨ Module Parameter ⇨ 485 Serial Port

Window

The following screen will be displayed if [Predefined Protocol Support Function] is set for the communication protocol type.

■Basic Settings

Item	Setting
⊟ *Communication Protocol Type*	Set communication protocol type.
Communication Protocol Type	Predefined Protocol Support Function
⊟ Advanced Settings	Set detailed setting.
Data Length	7bit
Parity Bit	Odd
Stop Bit	1bit
Baud Rate	115,200bps

Communication board (CH2)

Navigation Window ⇨ Parameter ⇨ FX5UCPU ⇨ Module Parameter ⇨ Extended Board

Window

The following screen will be displayed if [FX5-232-BD] or [FX5-485-BD] is set for the extended board and [Predefined Protocol Support Function] is set for the communication protocol type.

■Basic Settings

Item	Setting
⊟ *Extended Board*	**Set the extended board type.**
Extended Board	FX5-485-BD
⊟ **Communication Protocol Type**	**Set communication protocol type.**
Communication Protocol Type	Predefined Protocol Support Function
⊟ **Advanced Settings**	**Set detailed setting.**
Data Length	7bit
Parity Bit	Odd
Stop Bit	1bit
Baud Rate	115,200bps

Communication adapter (CH3/CH4)

When an expansion adapter is used, add expansion adapter to Module Information.

Navigation window ⇨ Parameter ⇨ Module Information ⇨ Right-click ⇨ Add New Module

After adding the expansion adapter, make settings on the screen displayed from the following operation.

Navigation window ⇨ Parameter ⇨ Module Information ⇨ ADP1 to ADP6 (Communication adapter) ⇨ Module Parameter

Window

Setting screen is the same as in the case of built-in RS-485 port (CH1).

Parameter setting details

Set the following items for the serial ports that use non-protocol communication. However, only two channel can be set to the predefined protocol support function.

	Items		Setting value
Basic Settings	Extended Board*1		When using this function, select [FX5-232-BD] or [FX5-485-BD].
	Communication Protocol Type		When using this function, select [Predefined Protocol Support Function].
	Advanced Settings	Data Length	7bit/8bit
		Parity Bit	None/Odd/Even
		Stop Bit	1bit/2bit
		Baud Rate	9600bps/ 19200bps/ 38400bps/ 57600bps/ 115200bps

*1 Only in the case of communication board (CH2).

Setting is not required (fixed value) for the board below.

Items	Descriptions
Start bit	1 bit
Header*2	Not added
Terminator*2	Not added
Control mode	None
Sum check code*2	Not added
Control procedure	None

*2 Can set it from packet setting.

7.6 Protocol Setting

Protocols can be selected and edited from the libraries that are pre-registered in GX Works3 or registered by the user.
Execute the protocol setting from a protocol setting window displayed by the following operation in GX Works3.

Tool⇨Predefined Protocol Support Function⇨CPU(Serial)⇨New

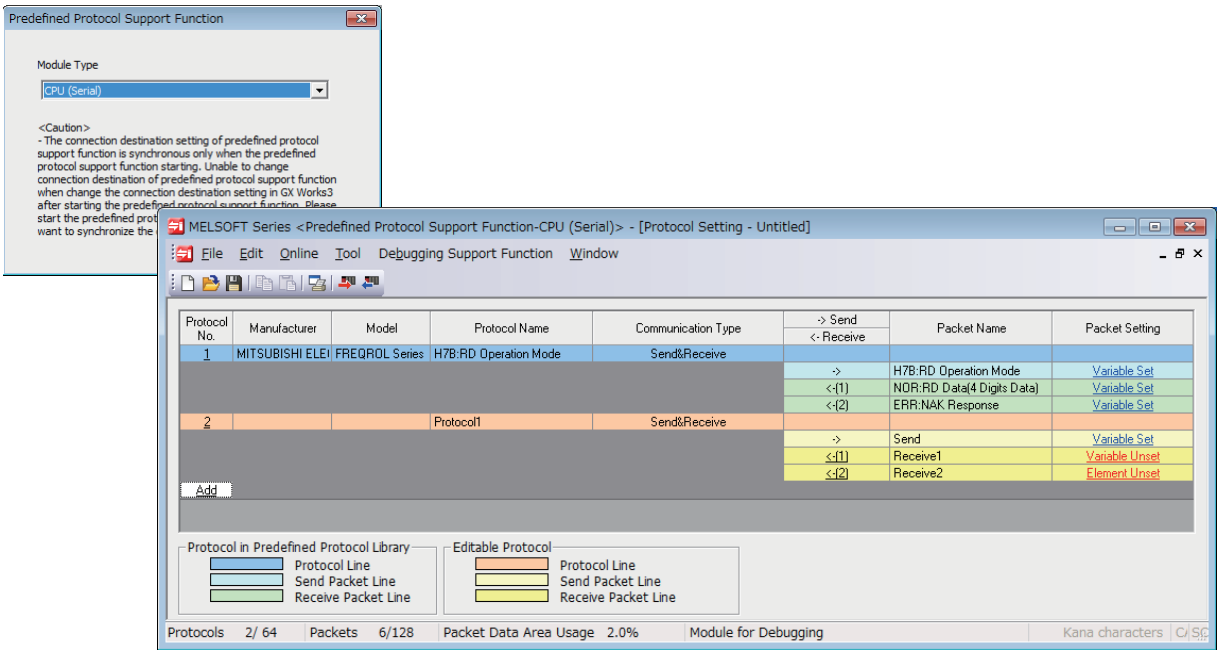

The fields in the protocol setting window are as follows.

Item	Description
Protocol No.	Displays the protocol number to be used for a predefined protocol dedicated instruction.
Manufacturer	Displays the manufacturer's name of the device to which a protocol to be set is applied.
Model	Displays the model name of the device to which a protocol to be set is applied.
Protocol Name	Displays the name of the protocol to be set.
Communication Type	Displays the communication type of the protocol to be set. • Send Only: Send one send packet once. • Receive Only: Receive a packet if it matches any of up-to-16 registered receive packets. • Send&Receive: Send one send packet, and receives a packet if it matches any of up-to-16 registered receive packets.
→Send ←Receive	Displays the packet direction. • Send: → • Receive: ←(n) n: receive packet number (1 to 16)
Packet Name	Displays the packet name.
Packet Setting	Displays the existence or non-existence of variables in an element, and set or unset of the variables. With 'Variable Unset', 'Element Unset', or 'Element error', the settings cannot be written to a CPU module or SD memory card. • No Variable: There is no variable in the element. • Variable Set: All variables are set. • Variable Unset: There are one or more unset variables. • Element Unset: There is no element in the editable protocol. • Element error: The element does not meet requirement.

The procedure to set a protocol on the protocol setting screen is as follows.

1. Adding protocols

Select or create a protocol from libraries. (☞ Page 194 Adding protocols)

2. Configuring detailed setting of protocols

Set the information and operation of protocols. (☞ Page 195 Configuring detailed setting of protocols)

3. Setting packets

Set the packets of protocols. (☞ Page 198 Packet Setting)

Adding protocols

Add or create a protocol from the predefined protocol library or user protocol library. Add a protocol on the screen displayed by the following operation.

Protocol setting screen ⇨ Edit ⇨ Add Protocol

Window

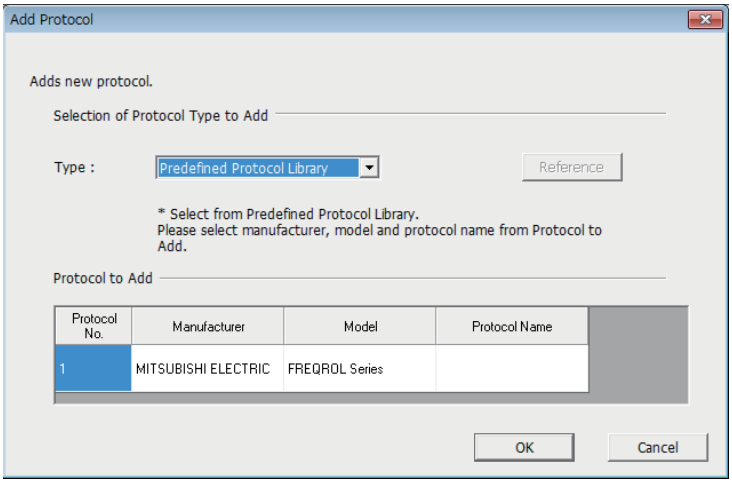

The setting item of above screen is follows.

Item	Description	Setting requirement			Setting range
		Predefined Protocol Library	User Protocol Library	Add New	
Type*1	Select a protocol type.	—	—	—	• Predefined Protocol Library • User Protocol Library • Add New
Protocol No.	Set the number of the protocol to be added.	○	○	○	1 to 64
Manufacturer	Set the manufacturer's name of the counterpart device registered in the library.	○	×	×	Manufacturer's name registered in the library.
Model	Set the model of the counterpart device registered in the library of the selected manufacturer.	○	×	×	Model registered in the library of the selected manufacturer.
Protocol Name	Set the protocol name of the counterpart device registered in the library of the selected model.	○	×	×	Protocol name registered with the library of the selected model.

○: Required, ×: Not required

*1 Predefined Protocol Library: The predefined protocol library offered by GX Works3
User Protocol Library: The protocol library which a user registered

Configuring detailed setting of protocols

Set the send/reception parameters of the added protocol. Set the detailed setting of the protocol on the screen displayed by the following operation.

Protocol setting screen ⇨ Select a row of any protocol on the protocol setting screen ⇨ Edit ⇨Protocol Detailed Setting Window

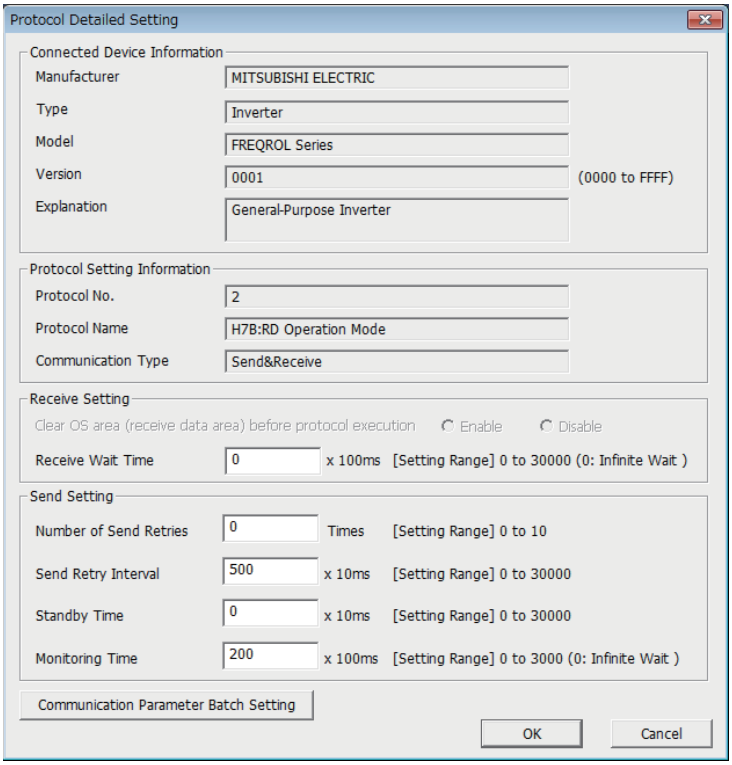

The setting item of above screen is follows.

Item	Description	Setting requirement			Setting range
		Predefined Protocol Library	User Protocol Library	Add New	
■Connected Device Information					
Manufacturer	Displays the connected device information.	×*1	×*1	○	—
Type		×*1	×*1	○	—
Model		×*1	×*1	○	—
Version		×*1	×*1	○	0000H to FFFFH
Explanation		×*1	×*1	○	—
■Protocol Setting Information					
Protocol No.	Displays the protocol number of the selected protocol.	—	—	—	—
Protocol Name	Displays the protocol name of the protocol.	×*1	×*1	○	Arbitrarily (32 characters)
Communication Type	Displays the communication type of the protocol.	×*1	×*1	○	• Send Only • Receive Only • Send & Receive
■Receive Setting (The setting is required when reception is selected for the communication type.)					
Receive Wait Time	Set waiting time after the waiting for reception status. If no matching packet is received within the set time, error occurs.	○	○	○	0 to 30000 (unit: 100ms)*2
■Send Setting (The setting is required when send is selected for the communication type.)					
Number of Send Retries	Set the number of times the CPU module retries to send when the sending from the CPU module has not been completed within the set time of monitoring time. Error occurs if sending has not been completed despite the specified number of times of sending retries.	○	○	○	0 to 10

Item	Description	Setting requirement			Setting range
		Predefined Protocol Library	User Protocol Library	Add New	
Send Retry Interval	Set the interval between the failure of sending from the CPU module and the retry when the sending from the CPU module has not been completed within the set time of monitoring time.	○	○	○	0 to 30000 (unit: 10ms)
Standby Time	Set standby time between when a protocol set to the CPU module turns to the execution status and when it actually sends the data.	○	○	○	0 to 30000 (unit: 10ms)
Monitoring Time	Set the waiting time between the send start and completion. An error occurs when the send is not completed within the specified time. However, if the send is retried, the data is resent for the number of send retries.	○	○	○	0 to 30000 (unit: 100ms)*2

○: Necessity, ×: Not necessity
*1 These items can be set when the project is changed to an editable project on the protocol setting screen.
*2 When 0 is set, infinite wait is set.

Point

The communication parameters can be set for multiple protocols by clicking the [Communication Parameter Batch Setting] button and setting protocol No. range, receive setting, and send setting.

Operations for protocol setting data

The protocol setting data can be written to the CPU built-in memory or an SD memory card. The written protocol data in the memory can be read and verified. The following describes the operations for the protocol setting data.

Writing protocol setting data

Write the protocol setting data on the screen displayed by the following operation.

Online ⇨ Module Write

Window

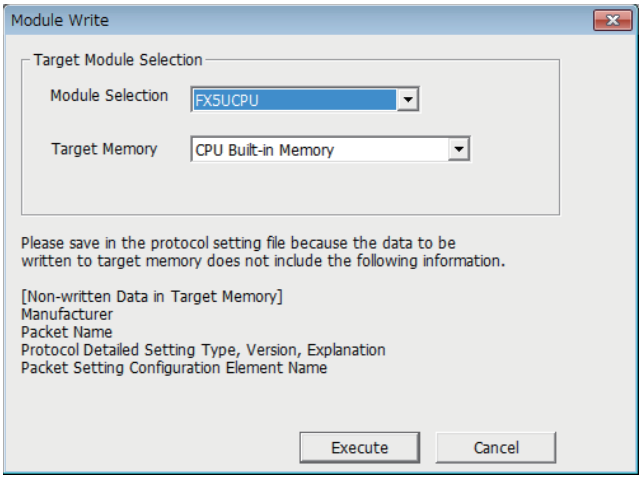

The procedure to write the data is as follows.

1. Select a CPU module to which the protocol setting data is written from Module Selection. Only the CPU module specified in specify connection destination connection of GX Works3 can be specified.
2. Select the memory to which the protocol setting data is to be written from Target Memory.
3. Click [Execute] to execute writing.

Precautions

The written protocol setting data is reflected when the power is turned on or the CPU module is reset.

Point

- The protocol setting data is written to module extended parameter (UEX3FF01.PPR).
- When using protocol setting data written to SD memory card, set the protocol setting data transferred to the CPU built-in memory by boot operation. For details, refer to MELSEC iQ-F FX5 User's Manual (Application).

Reading protocol setting data

Read the protocol setting data on the screen displayed by the following operation.

Online ⇨ Module Read

Window

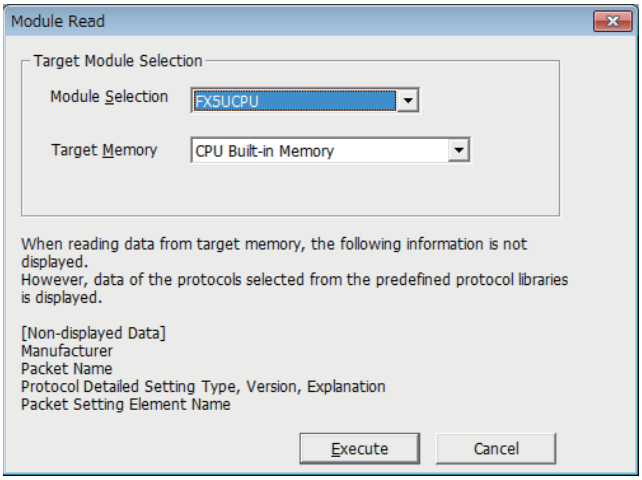

The procedure to read the data is as follows.

1. Select a CPU module from which the protocol setting data is read from Module Selection. Only the CPU module specified in specify connection destination connection of GX Works3 can be specified.
2. Select the memory to which the protocol setting data is to be read from Target Memory.
3. Click [Execute] to execute reading.

Point

The following data is not displayed even when reading from CPU module because it will not be written as a protocol setting data. However, the protocol selected from the predefined library is displayed.

- Manufacturer
- Packet name
- Type, Version, Explanation in the protocol detailed setting
- Element name in the packet setting

Verification protocol setting data

Verify the protocol setting data that is currently set with the protocol setting data that is written to the memory on the screen displayed by the following operation.

Online ⇨ Module Verification

Window

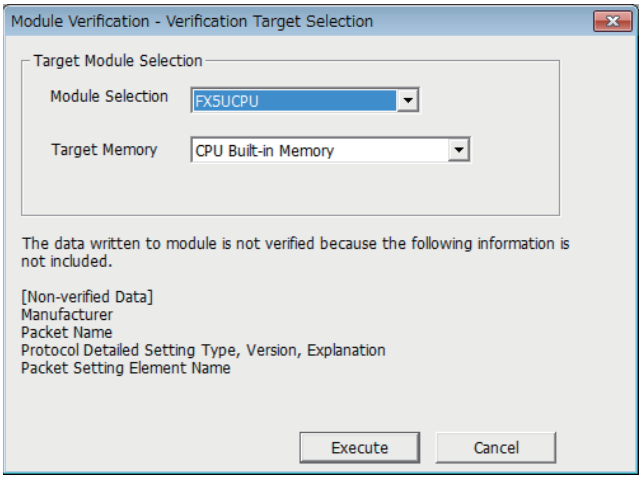

The procedure to verify the data is as follows.

1. Select the CPU module of the verification target to which the protocol setting data is written from Module Selection. Only the CPU module specified in specify connection destination connection] of GX Works3 can be specified.
2. Select the memory in which the protocol setting data is written from Target Memory.
3. Click [Execute] to execute verification and display the result.

7.7 Packet Setting

The send packet to the counterpart device and the receive packet from the counterpart device of when process is executed are registered in a protocol. The packet which are set with the predefined protocol support function is created with some elements. Up to 32 elements can be set in a packet.

Ex.

Example of a packet configuration

■Example of format of packet from counterpart device

Header 02H	Station No. “00” to ”99”	Command “WT”	Read data “0000” to ”9999”	Check code	Terminator 03H

■Packet elements setting with the predefined protocol function for the format shown above

	Data area				
Header	Non-conversion variable	Static data	Conversion variable	Check Code	Terminator

Point

Configure the packet in the order of header, data area*1, and terminator. Check code and static data can be placed after the terminator.

*1 Element: Length / static data/ non-conversion variable / conversion variable / check code / non-verified reception

Set the packet in the packet setting screen displayed by the following operation of GX Works3.

Protocol setting screen ⇨ Desired packet setting

Window

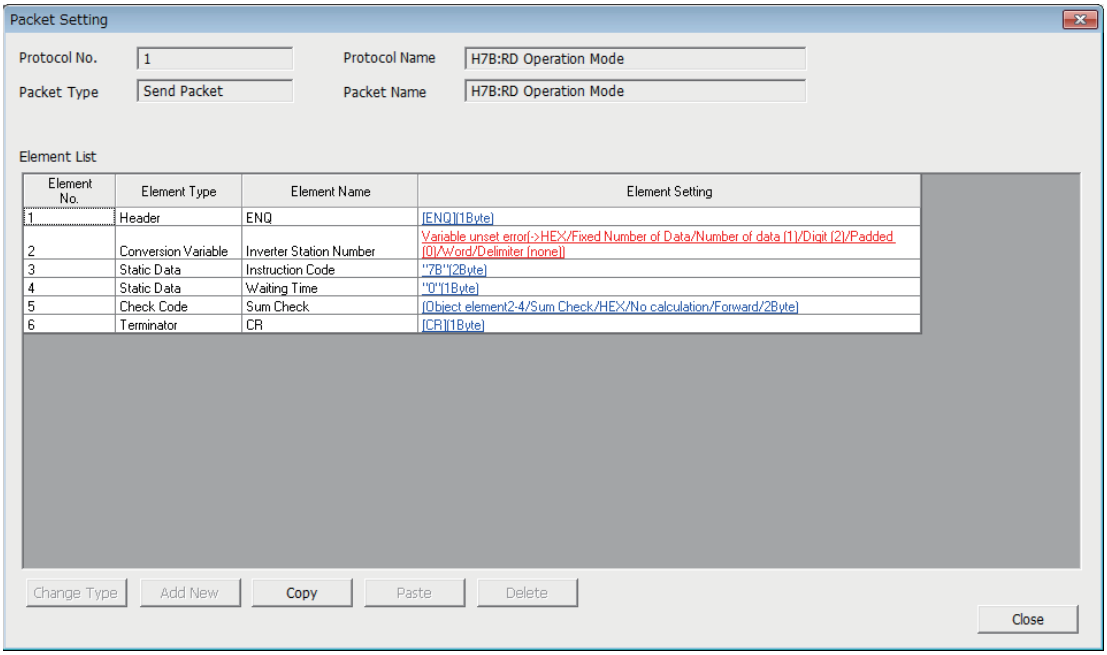

The setting item of above screen is follows.

Item	Description	Setting requirement			Setting range
		Predefined Protocol Library	User Protocol Library	Add New	
Protocol No.	Displays the protocol number of the selected protocol.	—	—	—	—
Protocol Name	The protocol name of the selected protocol.	—	—	—	—
Protocol Type	The protocol type of the selected protocol. (Send packet or receive packet)	—	—	—	—
Packet Name	The packet name of the selected packet.	× *1	○	○	Arbitrarily (32 characters)
■List of elements					
Element No.	These numbers indicate the order of elements. When any element number is changed, the elements are arranged in the numerical order.	×	○	○	1 to 32
Element Type	The type of each element is displayed. For details, refer to the subsequent section of each element. • Header • Terminator ■Data area • Length • Static Data • Non-conversion Variable • Conversion Variable • Check Code • Non-verified reception	×	○	○	—
Element Name	Displays the element name.	×	○	○	Arbitrarily (32 characters)
Element Setting	The setting of each element is displayed. Click an item to display each setting window.	○	○	○	—

○: Necessity, ×: Not necessity

*1 These items can be set when the project is changed to an editable project on the protocol setting screen.

Header

Use this element when a specific code or character string exists at the head of a packet.

- When sending: Sends a specified code and character string.
- When receiving: Verifies a header and received data.

Window

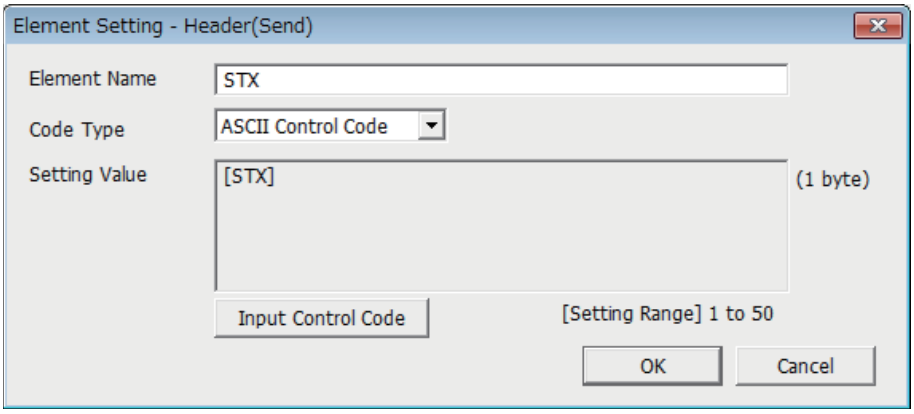

Item	Description	Remarks
Element Name	Set the name of the element.	—
Code Type	Select a data type of the setting value. • ASCII String • ASCII Control Code • HEX	—
Setting Value	Set data within 1 to 50 bytes. The setting ranges that can be set for each code type are as follows: • ASCII String: 20H to 7EH • ASCII Control Code: 00H to 1FH, and control code of 7FH • HEX: hexadecimal data of 00H to FFH	Setting example • ASCII String: 'ABC' • ASCII Control Code: STX • HEX: FFFF

Considerations for configuring packet element

- Only one header can be used in a packet.
- A header can be set only at the head of a packet.

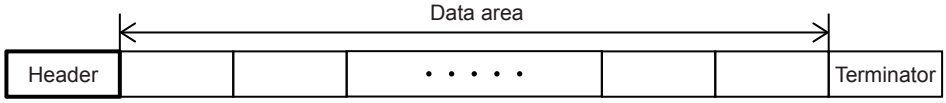

Terminator

Use this element when a code or character string indicating the end of the packet is included.

Window

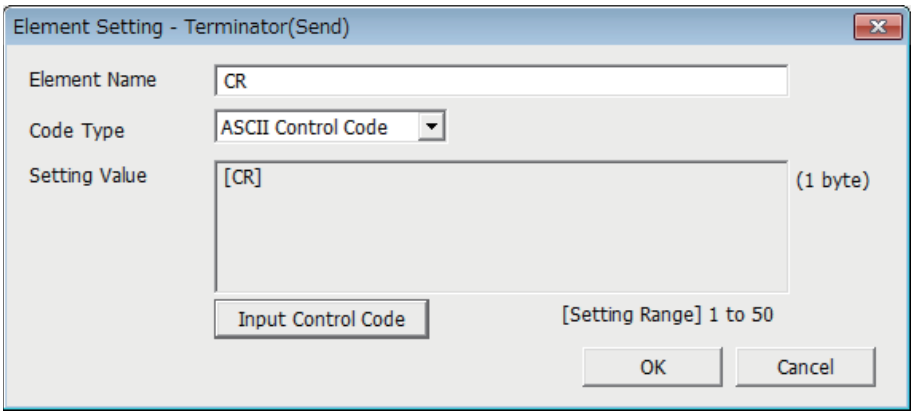

Item	Description	Remarks
Element Name	Set the name of the element.	—
Code Type	Select a data type of the setting value. • ASCII String • ASCII Control Code • HEX	—
Setting Value	Set data within 1 to 50 bytes. The setting ranges that can be set for each code type are as follows: • ASCII String: 20H to 7EH • ASCII Control Code: 00H to 1FH, and control code of 7FH • HEX: hexadecimal data of 00H to FFH	Setting example • ASCII String: 'ABC' • ASCII Control Code: ETX • HEX: FFFF

Considerations for configuring packet element

- Only one terminator can be used in a packet.
- A terminator can be set only at the end of a packet. Check code and static data only can be placed after the terminator.

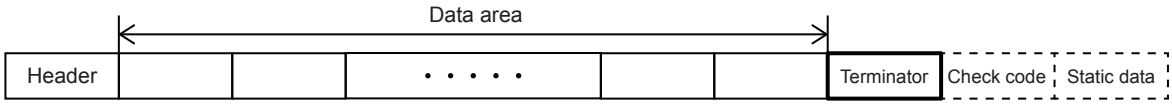

Length

Use this element when an element indicating the data length is included in a packet.

- When sending: Calculates the data length of a specified range, and adds the result to a send packet.
- When receiving: Verifies the data (value) corresponding to the length in the received data as the data length of the specified range.

For data examples of length, refer to ☞ Page 241 Data examples of Length.

Window

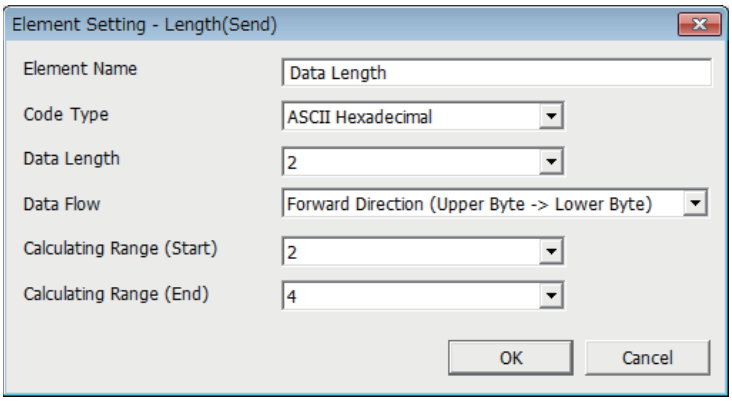

Item		Description			Remarks
Element Name		Set the name of the element.			—
Code Type		Select a format of the data length. • ASCII Hexadecimal • ASCII Decimal • HEX			—
Data Length		Select the data length on the line. The range is 1 to 4.			—
Data Flow		Forward Direction (Upper Byte→Lower Byte)	When sending	Sends a calculated length from the upper byte.	Data flow setting is invalid when data length is 1 byte.
			When receiving	Receives data from the upper byte.	
		Reverse Direction (Lower Byte→Upper Byte)	When sending	Sends a calculated length from the lower byte.	
			When receiving	Receives data from the lower byte.	
		Byte Swap (by Word)	When sending	Sends a calculated length swapping the upper byte and lower byte by word.	Data flow setting is invalid when data length is 1 to 3 byte.
			When receiving	Receives data swapping the upper byte and lower byte by word.	
Calculating Range	Start	Select the start packet element numbers for the calculating range. The range is 1 to 32.			Refer to ☞ Page 243.
	End	Select the last packet element numbers for the calculating range. The range is 1 to 32.			

Considerations for configuring packet element

- Only one terminator can be used in a packet.
- To configure the length, one or more other elements are needed.

Caution

- When the number of digits of calculation result is greater than that specified in Data Length, digits greater than the specified digit are omitted (ignored).

Ex.

When 2 bytes is specified in Data Length and the calculation result is 123 bytes, the data length is considered as 23.

- When any Non-conversion variable (Variable length), Conversion variable (Variable number of data), Conversion variable (Fixed number of data/Variable number of digits[*1]), or Non-verified reception (Variable number of characters) is placed behind Length and they are not included in the calculating range of the Length, place any of the following data immediately after the Non-conversion variable (Variable length), Conversion variable (Variable length) or Non-verified reception.

- Static Data
- Terminator
- Check code + Static Data
- Check code + Terminator

- When Code Type is ASCII Hexadecimal, a corresponding packet is regarded as a mismatch packet if a string other than 0 to 9, A to F, and a to f is received.
- When Code Type is ASCII Decimal, a corresponding packet is regarded as a mismatch packet if a string other than 0 to 9 is received.

*1 Excluding the case where number of send data is 1 and delimiter is not no delimiter.

Static Data

Use this element when a specific code or character string such as command exists in a packet.

- When sending: Sends a specified code and character string.
- When receiving: Verifies the received data.

Window

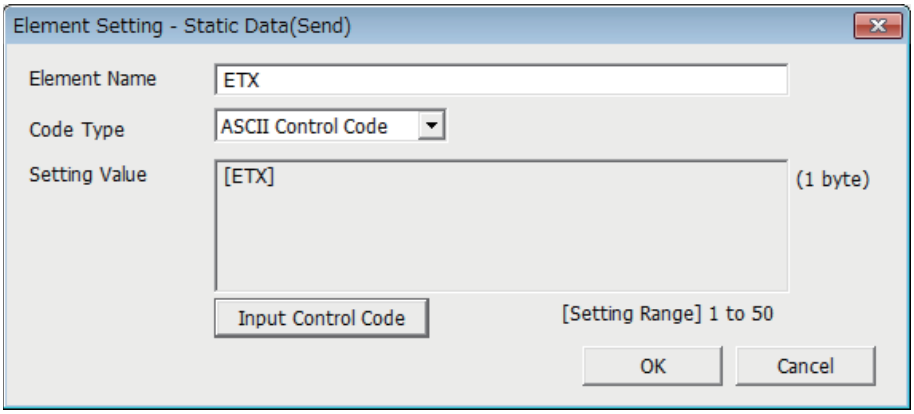

Item	Description	Remarks
Element Name	Set the name of the element.	—
Code Type	Select a data type of the setting value. • ASCII String • ASCII Control Code • HEX	—
Setting Value	Set data within 1 to 50 bytes. The setting ranges that can be set for each code type are as follows: • ASCII String: 20H to 7EH • ASCII Control Code: 00H to 1FH, and control code of 7FH • HEX: hexadecimal data of 00H to FFH	Setting example • ASCII String: 'ABC' • ASCII Control Code: US • HEX: FFFF

Point

Multiple static data elements can be placed to desired positions in the data portion.

Non-conversion Variable

Use this element to send the data in the data device as a part of a send packet, or store a part of a receive packet to the device. Use when there is a variable element in the packet format that depends on the system.
For data examples of non-conversion variable, refer to ☞ Page 243 Data examples of Non-conversion Variable.

Window

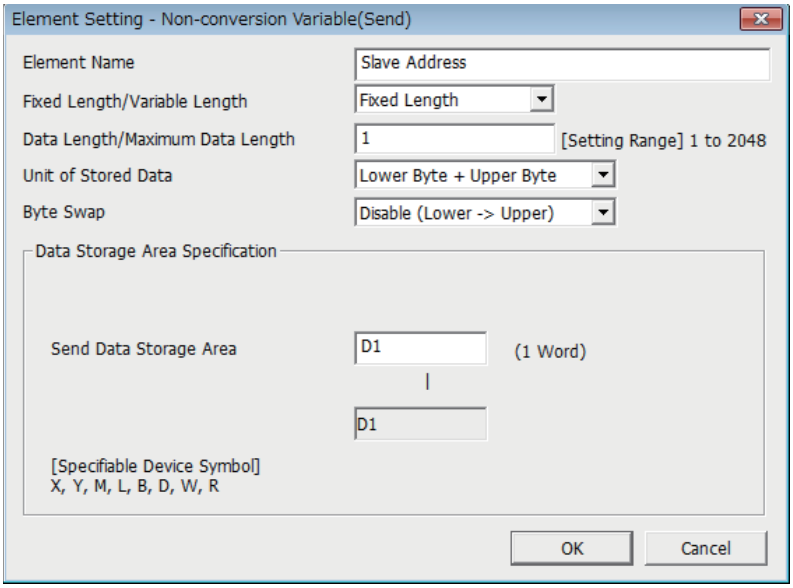

Item	Description		
Element Name	Set the name of the element.		
Fixed Length/Variable Length	Fixed Length		Sends and receives the data whose length is fixed.
	Variable Length	When sending	Specifies the data length at the time of the protocol execution and sends data.
		When receiving	Receives data whose data length is variable.
Data Length/Maximum Data Length	Set the length of data to be transmitted and received. (For the variable length data, set the maximum data length that can be specified to the data length storage area.) The range is 1 to 2048.		
Unit of Stored Data	Lower Byte + Upper Byte	When sending	Sends each one word (2 bytes) data in the data storage area in the order of the lower byte to the upper byte.
		When receiving	Stores the received data to the data storage area in the order of the lower byte to the upper byte.
	Lower Bytes Only	When sending	Sends only lower byte of data in the data storage area.
		When receiving	Stores the received data in the only lower byte of the data storage area.
Byte Swap	• Disable (Lower → Upper) • Enable (Upper → Lower)	When sending	When Enable is selected, sends data swapping the upper byte and lower byte by word (2 bytes). When Unit of Stored Data is Lower Byte + Upper Byte and Data Length is an odd number of bytes, sends the upper byte at transmission of the last byte. When Unit of Stored Data is Lower Bytes Only and Data Length is an odd number of bytes, sends data without any byte swap at transmission of the last byte.
		When receiving	When Enable is selected, receives data swapping the upper byte and lower byte by word (2 bytes). When Unit of Stored Data is Lower Byte + Upper Byte and Data Length is an odd number of bytes, stores the last byte to the upper byte. When Unit of Stored Data is Lower Bytes Only and Data Length is an odd number of bytes, stores the last byte without any byte swap.
Data Storage Area Specification	Specify a start device*1 to store variable value.	When sending	Specify a head device of the area where send data is stored.
		When receiving*2	Specify a head device of the area where receive data is stored.

*1 Refer to ☞ Page 206 Settable devices.

*2 For the variable data length, the data storage area is decided by specifying the data length storage area. (☞ Page 205 When Fixed Length/Variable Length is Variable Length)

Configuration of the data storage area

■When Fixed Length/Variable Length is Fixed Length

An area starting from the device number which is specified on the Element Setting screen is considered as the data storage area.

The data storage area to be occupied varies depending on the setting of Unit of Stored Data.

- When Lower Byte + Upper Byte is selected, the same size as the data length is occupied.

(However, when the data length of a send packet is an odd number, the upper byte (lower byte for Byte Swap) of the last device is not sent. When the data length of a receive packet is an odd number, the last data is stored with one byte of 00H added.)

- When Lower Bytes Only is selected, twice the size of the data length is occupied.

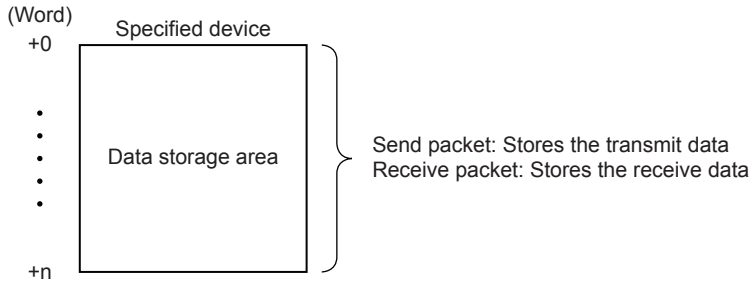

■When Fixed Length/Variable Length is Variable Length

An area starting from the device number which is specified on the Element Setting screen +1 is considered as the data storage area.

The data storage area to be occupied varies depending on the setting of Unit of Stored Data.

- When Lower Byte + Upper Byte is selected, the same size as the data length + one word (length for the data length storage area) are occupied.

(However, when the data length of a send packet is an odd number, the upper byte (lower byte for Byte Swap) of the last device is not transmitted. When the data length of a receive packet is an odd number, one byte of 00H is added to the last data and stored.)

- When Lower Bytes Only is selected, twice the size of the data length + one word (length for the data length storage area) are occupied.

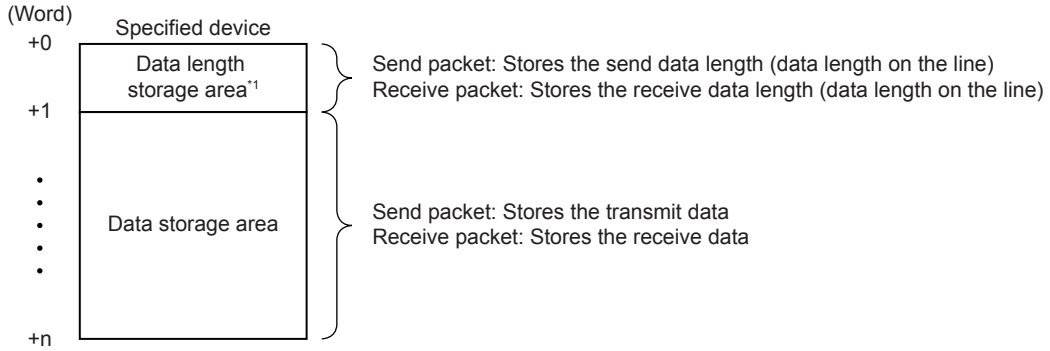

*1 The unit of data length is byte. Stores the data length on the line.

■Settable devices

Settable devices to data storage area is follows.

Device		Setting range	Remarks
Input	X	0 to 1023	When the assignment has been changed, the devices including the one having the maximum device number after the change can be accessed.
Output	Y		
Internal relay	M	0 to 32767	
Latch relay	L		
Link relay	B		
File register	R		
Link register	W		
Data register	D	0 to 7999	

Considerations for configuring packet element

Multiple Non-conversion variable (Fixed length) elements can be placed in a packet, and multiple Non-conversion variable (Variable length) elements can also be placed in a send packet. However, only one Non-conversion variable (Variable length) can be placed in a receive packet, and one of the following requirements need to be met.

- Place any of the following items immediately after the non-conversion variable.
  - Static data
  - Terminator
  - Check code + Static data
  - Check code + Terminator
- Place length before a non-conversion variable and include the non-conversion variable in the calculating range.

In addition, two or more of the following four elements cannot be placed in the same packet.

- Variable number of data [Conversion variable]
- Fixed number of data and variable number of digits [Conversion variable] (Excluding the case where Number of Send Data is 1 and Delimiter is not No delimiter.)
- Variable length [Non-conversion variable]
- Variable number of characters [Non-verified reception]

Caution

- When receiving variable length data whose length exceeds the Maximum data length, CPU module stores data as long as the maximum data length and omits the rest. (The protocol completes successfully.)
- Out of packet data received from counterpart devices, the data corresponding to variable needs to be distinguishable from a terminator or a static data immediately after non-conversion variable. The reception processing may not be performed normally if it cannot distinguished.

Ex.

When value of a terminator or value of a static data following a non-conversion variable is used in a non-conversion variable, CPU module recognizes it as data of a terminator or a static data following a non-conversion variable and performs the verification / reception processing.

Conversion Variable

This element converts the numerical data in the value of device to an ASCII string and sends it, or converts the received data (ASCII string) to numerical data and stores it to the device. When a variable element that is dependent on the system exists during packet formatting, use this function.

For data examples of conversion variable, refer to ☞ Page 244 Data examples of Conversion Variable.

Window

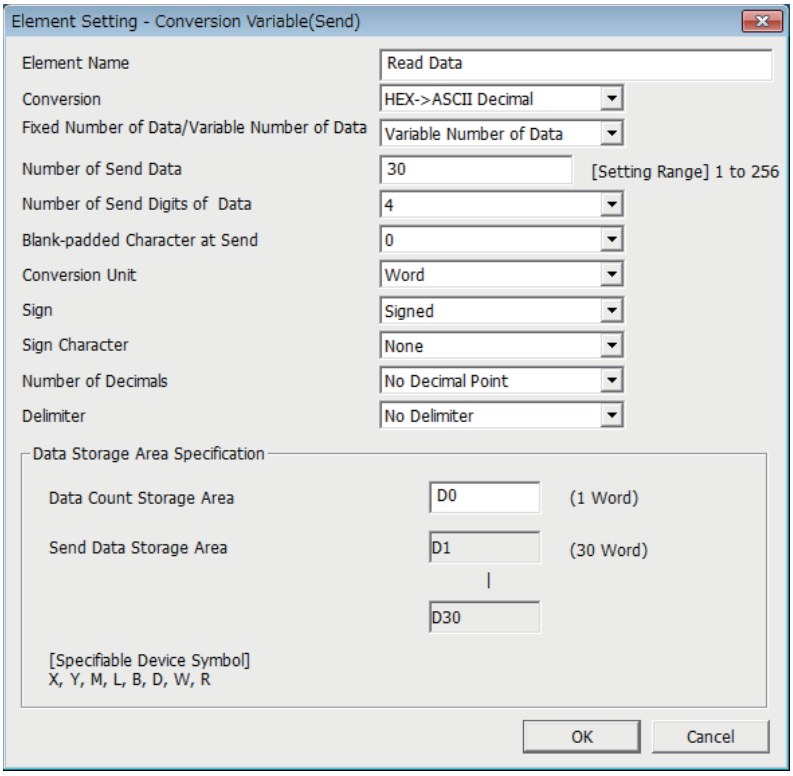

Item	Description		
Element Name	Set the name of the element.		
Conversion	When sending	HEX→ ASCII Decimal	Converts numeric value stored in the data storage area to ASCII decimal.
		HEX→ ASCII Hexadecimal	Converts numeric value stored in the data storage area to ASCII hexadecimal.
	When receiving	ASCII Decimal → HEX	Treats received data as ASCII decimal, converts it to numeric value, and stores it to the data storage area.
		ASCII Hexadecimal → HEX	Treats received data as ASCII hexadecimal, converts it to numeric value, and stores it to the data storage area.
Fixed Number of Data/ Variable Number of Data	Fixed Number of Data		Fixes the number of data to be sent and received.
	Variable Number of Data		• When sending: Specifies the number of data to be sent at the time of the protocol execution and sends the data. • When receiving: Receives data of which the number is variable. For Variable number of digits, delimiters are required.
Number of Send Data	Set the number of data to be transmitted and received. (For Variable Number of Data, set the maximum number of data that can be specified to the data quantity storage area.) The range is 1 to 256.		
Number of Send Digits of Data	1 to 10		Set the number of digits per one transmitted and received data. When the number of send digits of data is less than the specified number of digits of data, upper digits are filled with blank-padded characters.
	Variable Number of Digits		• When sending: Sends only the data portion converted to an ASCII string in variable length. • When receiving: Receives only an ASCII string of the data portion in variable length. When the number of send data/maximum data length is set to 2 or greater, blank-padded characters are required.

Item	Description	
Blank-padded Character at Send	• 0 • Space	Select a character used to fill upper digits when the number of digits of data is not Variable Number of Digits and the number of digits of transmitted/received data is less than the specified number of send digits of data.
Conversion Unit	Word	Converts one word as one data in the data storage area.
	Double word	Converts two words as one data in the data storage area.
Sign	• Unsigned • Signed	Select whether to add signs to date in the data storage area. This item can be set when Conversion is HEX → ASCII Decimal or ASCII Decimal → HEX.
Sign Character	• None • + • 0 • Space	Select the sign character for positive value on line. This item can be set when Conversion is HEX → ASCII Decimal or ASCII Decimal → HEX, and Sign is Signed. The sign character for negative value is fixed to "-". For operation of sign character, refer to ☞ Page 245.
Number of Decimals	• No Decimal Point • Variable Point • 1 to 9	Select the decimal point position of data on line. This item can be set when Conversion is HEX → ASCII Decimal or ASCII Decimal → HEX. For operation of number of decimals, refer to ☞ Page 246.
Delimiter	• No Delimiter • Comma • Space	Select the delimiter inserted after one data. A delimiter is not added to the end of data when the number of data is 2 or more. For operation of delimiter, refer to ☞ Page 247.
Data Storage Area Specification	Specify a start device*1 to store variable value.	

*1 Refer to ☞ Page 210 Settable devices.

Configuration of the data storage area

■When Fixed Number of Data/Variable Number of Data is Fixed Number of Data

An area starting from the device number which is specified on the element setting screen is considered as the data storage area.

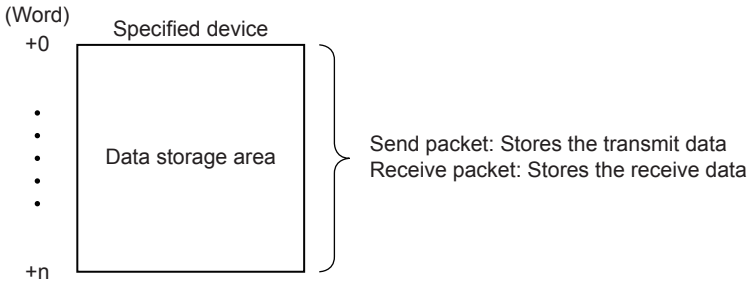

■When Fixed Number of Data/Variable Number of Data is Variable Number of Data

An area starting from the device number which is specified on the element setting screen +1 is considered as the data storage area.

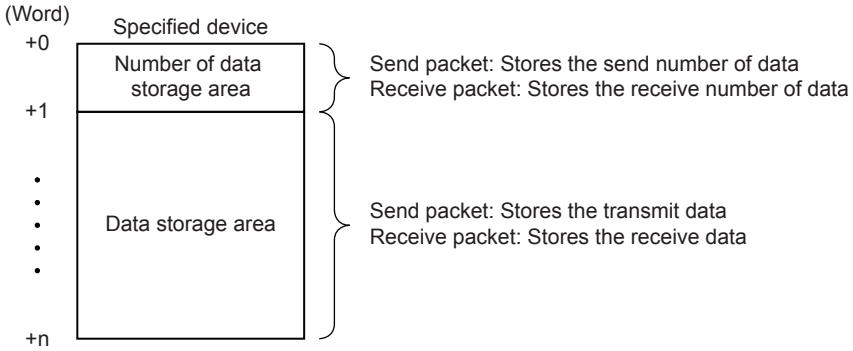

■Occupied size in data storage area

The size occupied in the data storage area varies depending on the settings of Conversion Unit and Number of Decimals.

Setting item		Occupied size in data storage area per one data
Conversion Unit	**Number of Decimals**	
Word	No Decimal point/Fixed point	1 word
	Variable point	2 words
Double Word	No Decimal point/Fixed point	2 words
	Variable point	4 words

■Data storage area configuration per one data

The following shows the data storage area configuration per one data.

- Case of Conversion Unit is Word

Number of Decimals	
No decimal Point/Fixed point	**Variable point**
Data storage area 0H: Numeric data	For Variable Point, the decimal point position is set in the data storage area. Data storage area 0H: Numeric data 1H: Decimal point position

In the decimal point position area, the decimal point position is set as follows.

Send/receive data (number of digits of data is 10)	Numeric data	Decimal point position
12345	12345 (3039H)	1 (1H)
1234.5	12345 (3039H)	10 (0AH)
123.45	12345 (3039H)	100 (64H)
12.345	12345 (3039H)	1000 (3E8H)
1.2345	12345 (3039H)	10000 (2710H)

- Case of Conversion Unit is Double word

Number of Decimals	
No decimal Point/Fixed point	**Variable point**
Data storage area 0H: Numeric data (L) 1H: Numeric data (H)	For Variable Point, the decimal point position is set in the data storage area. Data storage area 0H: Numeric data (L) 1H: Numeric data (H) 2H: Decimal point position (L) 3H: Decimal point position (H)

In the decimal point position area, the decimal point position is set as follows.

Send/receive data (number of digits of data is 10)	Numeric data	Decimal point position
1234567890	1234567890 (499602D2H)	1 (1H)
123456789.0	1234567890 (499602D2H)	10 (0AH)
12345678.90	1234567890 (499602D2H)	100 (64H)
1234567.890	1234567890 (499602D2H)	1000 (3E8H)
⋮	⋮	⋮
1.234567890	1234567890 (499602D2H)	1000000000 (3B9ACA00H)

■Range of value that can be used in the data storage area

The following table shows the range of value that can be used in the data storage area.

Conversion	Sign	Conversion unit	Range of value
HEX → ASCII decimal ASCII decimal → HEX	Unsigned	Word	0 to 65535 (0H to FFFFH)
		Double word	0 to 4294967295 (0H to FFFFFFFFH)
	Signed	Word	-32768 to 32767 (8000H to FFFFH, 0H to 7FFFH)
		Double word	-2147483648 to 2147483647 (80000000H to FFFFFFFFH, 0H to 7FFFFFFFH)
HEX → ASCII hexadecimal ASCII hexadecimal → HEX	—	Word	0H to FFFFH
		Double word	0H to FFFFFFFFH

■Settable devices

Settable devices to data storage area is follows.

Device		Setting range	Remarks
Input	X	0 to 1023	When the assignment has been changed, the devices including the one having the maximum device number after the change can be accessed.
Output	Y		
Internal relay	M	0 to 32767	
Latch relay	L		
Link relay	B		
File register	R		
Link register	W		
Data register	D	0 to 7999	

Considerations for configuring packet element

To place a Conversion variable in a packet, the following requirements need to be met.

■To place Conversion variable in send packet

Multiple Conversion variable elements can be placed in one packet, and they can be placed in desired positions in the data portion.

■To place Conversion variable in receive packet

Multiple conversion variable elements can be placed in one packet in the cases not corresponding to (1), (2) and (3).

- Variable number of data (Only one Conversion variable can be placed in one packet, and either of the following (1) or (2) need to be met.)

(1) For discerning the data length of a Conversion variable, any of the following items is placed immediately after the conversion variable.

- Static data
- Terminator
- Check code + Static data
- Check code + Terminator

(2) Length is placed before a Conversion variable. (The Conversion variable needs to be included in the calculating range.)

- Fixed number of data

■Variable number of digits

(3) When the number of data is 2 or more, or the number of data is 1 with no delimiter, only one conversion variable can be placed in a packet and it needs to be placed in the order mentioned in variable number of data.

(4) When a Conversion variable (the number of data is 1, with delimiter, and variable number of digits) and the following four elements are placed in the same packet, these four elements need to be placed behind the Conversion variable (the number of data is 1, with delimiter, and variable number of digits).

- Conversion variable (variable number of data)
- Conversion variable (fixed number of data and variable number of digits) (The case of (3). Excluding the case where Number of Send Data is '1' and Delimiter is not No Delimiter.)
- Non-conversion variable (variable length)
- Non-verified reception (variable number of characters)

Note that two or more of these four elements cannot be placed in the same packet.

(5) When a Conversion variable (variable decimal point) and the four elements mentioned in (4) are placed in the same packet, these elements need to be placed behind the Conversion variable (variable decimal point).

(6) When a Conversion variable (unsigned) and the four elements mentioned in (4) are placed in the same packet, these elements need to be placed behind the Conversion variable (unsigned).

Caution

■A string other than '0'-'9', 'A'-'F', or 'a'-'f' is received

When Conversion is ASCII Hexadecimal→HEX, an error may occur if a string other than '0'-'9', 'A'-'F', or 'a'-'f' is received.

■A string other than '0'-'9' is received

When Conversion is ASCII Decimal→HEX, an error may occur if a string other than '0'-'9' is received. However, the error does not occur in the following cases.

Item	CPU module operation
Sign/Sign Character	When Signed is selected, a signed character can be received. However, when a signed character which is not at the head of data is received, an error may occur.
Number of Decimals	When any other than [No decimal point] is selected, '. ' (a period) can be received. However an error may occur when '. ' (a period) which is not at the specified number of digits of data is received. An error may also occur when Variable point is selected and '. ' (a period) which is at the head or end of a unit of data is received.
Delimiter	When any other than No delimiter is selected, a delimiter can be received. However an error may occur when a delimiter which is not at a boundary of data is received.

■A data of which number of digits exceeds the upper limit is received

When Number of Send Digits of Data is Variable Number of Digits, an error may occur if the number of digits of received data exceeds the upper limit shown below.

Conversion unit	Conversion content	Upper limit of number data to be received
Word	ASCII Decimal → HEX	5 digits
	ASCII Hexadecimal → HEX	4 digits
Double word	ASCII Decimal → HEX	10 digits
	ASCII Hexadecimal → HEX	8 digits

■A data whose decimal point position is greater than the number of digits is specified

When Number of Decimals is Variable Point in a send packet, a decimal point place specification error (7D21H) may occur if the decimal point position is greater than the number of digits.

■A data whose number of digits is '0' is received

When Number of Send Digits of Data is Variable Number of Digits, an abnormal digit number error (7D19H) may occur if the number of digits of received data is '0'.

■A data whose number of digits are fewer than the digits specified in Number of Send Digits of Data are received

An insufficient digit number error (7D18H) may occur if data whose number of digits are fewer than the digits specified in number of send digits of data are received.

Ex.

When Number of Send Digits of Data is set to 4 digits

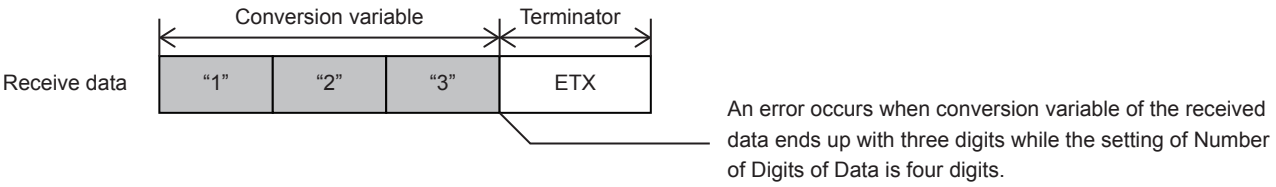

■A data whose number exceeds Maximum number of data is received

When receiving data of which the number exceeds the Maximum number of data, CPU module stores data as many as the maximum number of data and omits the rest. (The protocol completes successfully.)

■A data that cannot be distinguished between Terminator or a Static data

In received packet data from counterpart devices, CPU module needs to be able to distinguish data corresponding to a conversion variable from those of a Terminator or a Static data following a Conversion variable. The reception processing may not be performed normally if they cannot be distinguished.

Ex.

When the value of terminator or a static data following the conversion variable is used as a conversion variable, CPU module recognizes it as a terminator or a fixed data following the conversion variable, verifies, and performs reception processing.

Check Code

Use this element when an element indicating check code data is included in a packet.
CPU module automatically calculates a specified check code at timing of sending/receiving, and adds it to a send packet or detects an error of a receive packet.

Window

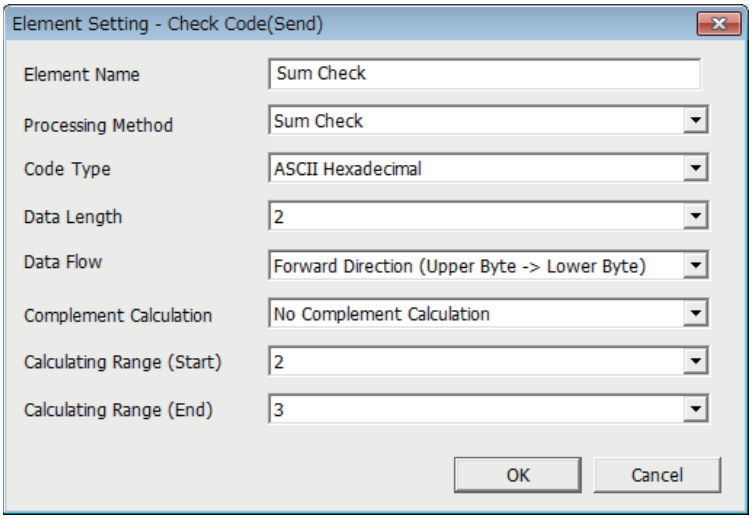

Item	Description			Remarks
Element Name	Set the name of the element.			—
Processing Method	Select a calculating method. • Horizontal Parity • Sum Check • 16-bit CRC (for MODBUS)			For calculation procedure, refer to following . ☞ Page 249 ☞ Page 251 ☞ Page 253
Code Type	• ASCII Hexadecimal • ASCII Decimal • HEX	When sending	Select a format in which a calculated check code is sent.	Not settable when Processing Method is 16-bit CRC (for MODBUS).
		When receiving	Select a format in which data are received.	
Data Length	Select the data length on the line (byte). The range is 1 to 4.			Not settable when Processing Method is 16-bit CRC (for MODBUS).

Item		Description			Remarks
Data Flow		Forward Direction (Upper Byte → Lower Byte)	When sending	Sends a calculated check code, from the lower byte.	Not settable when Processing Method is 16-bit CRC (for MODBUS), or when the Data Length is set to 1 (byte).
			When receiving	Handles received data as a check code, from the upper byte.	
		Reverse Direction (Lower Byte → Upper Byte)	When sending	Sends a calculated check code, from the lower byte.	
			When receiving	Receives data from the lower byte.	
		Byte Swap (by Word)	When sending	Sends a calculated check code by swapping the upper byte and lower byte by word.	Not settable when Processing Method is 16-bit CRC (for MODBUS), or when the Data Length is set to 1 to 3 (byte).
			When receiving	Receives data by swapping the upper byte and lower byte by word, and handles as a check code.	
Complement Calculation		Select the complement calculation. • No Complement Calculation • One's Complement • Two's Complement			Not settable when Processing Method is 16-bit CRC (for MODBUS).
Calculating Range	Start	Select the starting element number of the calculating range. The range is 1 to 32.			Refer to ☞ Page 254.
	End	Select the ending element number of the calculating range. The range is 1 to 32.			

Considerations for configuring packet element

- Only one check code can be placed in a packet.
- A check code can be placed in any position of the data portion or after a terminator. However, one or more elements are needed before the check code.

Caution

- When Code Type is [ASCII Hexadecimal], an error may occur if a string other than '0' to '9' 'A' to 'F' 'a' to 'f' is received.
- When Code Type is [ASCII Decimal], an error may occur of characters if a string other than '0' to '9' is received.
- When a calculated check code (Sum check/Horizontal parity/16-bit CRC) does not match a received check code, a error may occur.

Non-verified reception

Use this element when received data includes unnecessary data while receiving data.
CPU module skips the specified number of characters if a receive packet includes a non-verified reception.
For data examples of non-verified reception, refer to ☞ Page 255 Data examples of Non-verified reception.

Window

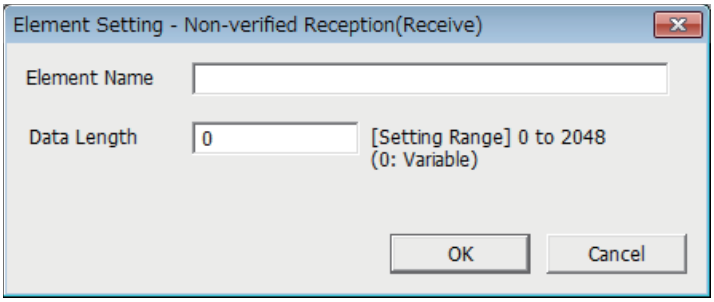

Item	Description	
Element Name	Set the name of the element.	
Data Length	0 (variable number of characters)	Set this item when the number of characters not to be verified varies in each communication.
	1 to 2048 (specified number of characters)	Set the number of characters not to be verified.

Considerations for configuring packet element

■When Data Length is '1 to 2048', the following requirements need to be met

Multiple Non-verified receptions can be used in a packet and placed in any position of the data portion.

■When Data Length is '0', the following requirements need to be met

Only one Non-verified reception can be placed in a packet, and one of the following requirements need to be met.

- Place any of the following data immediately after a Non-verified reception.
  - Static data
  - Terminator
  - Check code + Static data
  - Check code + Terminator
- Place length before a non-verified reception and include the non-verified reception in the calculating range.

In addition, two or more of the following four elements cannot be placed in the same packet.

- Conversion variable [Variable number of data]
- Conversion variable [Fixed number of data and Variable number of digits] (Excluding the case when the number of data is '1' with delimiter.)
- Non-conversion variable [Variable length]
- Non-verified reception [Variable number of characters]

7.8 Programming

This section explains how to create programs for predefined protocol support function using S(P).CPRTCL instruction and how such programs operate.

For details on related devices, refer to ☞ Page 228 Related Devices.
For communication settings, refer to ☞ Page 191 Communication Settings.
For protocol settings, refer to ☞ Page 193 Protocol Setting.

Predefined protocol support instruction

This section explains the function, operation and programming method of the S(P).CPRTCL instruction.

For details on the expression and executable format of the S(P).CPRTCL instruction, refer to 📖MELSEC iQ-F FX5 Programming Manual (Instructions, Standard Functions/Function Blocks).

S(P).CPRTCL

This instruction is used to execute the predefined protocol registered with the engineering tool via RS-485 built in the CPU module, or the communication board and communication adapter installed to the CPU module.

Ladder	ST	FBD/LD
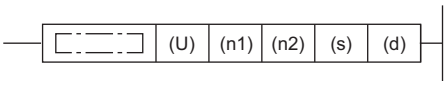	ENO:=S_CPRTCL(EN,U0,s,n1,n2,d); ENO:=SP_CPRTCL(EN,U0,s,n1,n2,d);	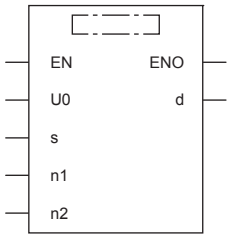 "S_CPRTCL", "SP_CPRTCL" enters □.)

Setting data

■Content, range, data types

Operand	Description	Range	Data type	Data type (label)
(U)*1	Dummy (Input the character string ['U0'].)	—	Character string	ANYSTRING_SINGLE
(n1)	Communication CH	K1 to 4	16-bit unsigned binary	ANY16_U
(n2)	Number of protocols to be executed continuously	K1 to 8	16-bit unsigned binary	ANY16_U
(s)	Start device containing the control data	☞ Page 216	Word	ANY16_ARRAY (Number of elements:18)
(d)	Head bit device number to output the instruction execution status	—	Bit	ANYBIT_ARRAY (Number of elements:2)

*1 In the case of the ST language and the FBD/LD language, U displays as U0.

■Applicable devices

Operand	Bit	Word			Double word		Indirect specification	Constant			Others
	X, Y, M, L, SM, F, B, SB, S	T, ST, C, D, W, SD, SW, R	U□\G□	Z	LC	LZ		K, H	E	$	
(U)	—	○	—	—	—	—	○	—	—	○	—
(n1)	—	○	—	—	—	—	○	○	—	—	—
(n2)	—	○	—	—	—	—	○	○	—	—	—
(s)	—	○	—	—	—	—	○	—	—	—	—
(d)	○	○*1	—	—	—	—	—	—	—	—	—

*1 T,ST and C cannot be used

■Control data

Device	Item	Description	Setting range	Set by*1
(s)	Result of executed protocols	The result of executed S(P).CPRTCL instruction is stored. When two or more protocols are executed, the execution result of the protocol executed last is stored. • 0: Normal completion • Other than 0: Error completion (error code)	—	System
(s)+1	Resulting number of executed protocols	The number of protocols executed by the S(P).CPRTCL instruction is stored. The execution of the protocol where an error has occurred is also counted in the number of executions. If the setting of setting data or control data contains an error, "0" is stored.	0, 1 to 8	System
(s)+2	Execution protocol number 1	Specify the number of the protocol to be executed first.	1 to 64	User
(s)+3	Execution protocol number 2	Specify the number of the protocol to be executed second.	0, 1 to 64	User
(s)+4	Execution protocol number 3	Specify the number of the protocol to be executed third.	0, 1 to 64	User
(s)+5	Execution protocol number 4	Specify the number of the protocol to be executed fourth.	0, 1 to 64	User
(s)+6	Execution protocol number 5	Specify the number of the protocol to be executed fifth.	0, 1 to 64	User
(s)+7	Execution protocol number 6	Specify the number of the protocol to be executed sixth.	0, 1 to 64	User
(s)+8	Execution protocol number 7	Specify the number of the protocol to be executed seventh.	0, 1 to 64	User
(s)+9	Execution protocol number 8	Specify the number of the protocol to be executed eighth.	0, 1 to 64	User
(s)+10	Verification match Receive packet number 1	If receiving is included in the communication type of the protocol that has been executed first, the receive packet number successful in verification match is stored. If the communication type is "receive only", "0" is stored. If an error occurs during execution of the first protocol, "0" is stored.	0, 1 to 16	System
(s)+11	Verification match Receive packet number 2	If receiving is included in the communication type of the protocol that has been executed second, the receive packet number successful in verification match is stored. If the communication type is "receive only", "0" is stored. If an error occurs during execution of the second protocol, "0" is stored. If the number of protocols executed is less than 2, "0" is stored.	0, 1 to 16	System
(s)+12	Verification match Receive packet number 3	If receiving is included in the communication type of the protocol that has been executed third, the receive packet number successful in verification match is stored. If the communication type is "receive only", "0" is stored. If an error occurs during execution of the third protocol, "0" is stored. If the number of protocols executed is less than 3, "0" is stored.	0, 1 to 16	System
(s)+13	Verification match Receive packet number 4	If receiving is included in the communication type of the protocol that has been executed fourth, the receive packet number successful in verification match is stored. If the communication type is "receive only", "0" is stored. If an error occurs during execution of the fourth protocol, "0" is stored. If the number of protocols executed is less than 4, "0" is stored.	0, 1 to 16	System
(s)+14	Verification match Receive packet number 5	If receiving is included in the communication type of the protocol that has been executed fifth, the receive packet number successful in verification match is stored. If the communication type is "receive only", "0" is stored. If an error occurs during execution of the fifth protocol, "0" is stored. If the number of protocols executed is less than 5, "0" is stored.	0, 1 to 16	System
(s)+15	Verification match Receive packet number 6	If receiving is included in the communication type of the protocol that has been executed sixth, the receive packet number successful in verification match is stored. If the communication type is "receive only", "0" is stored. If an error occurs during execution of the sixth protocol, "0" is stored. If the number of protocols executed is less than 6, "0" is stored.	0, 1 to 16	System
(s)+16	Verification match Receive packet number 7	If receiving is included in the communication type of the protocol that has been executed seventh, the receive packet number successful in verification match is stored. If the communication type is "receive only", "0" is stored. If an error occurs during execution of the seventh protocol, "0" is stored. If the number of protocols executed is less than 7, "0" is stored.	0, 1 to 16	System
(s)+17	Verification match Receive packet number 8	If receiving is included in the communication type of the protocol that has been executed eighth, the receive packet number successful in verification match is stored. If the communication type is "receive only", "0" is stored. If an error occurs during execution of the eighth protocol, "0" is stored. If the number of protocols executed is less than 8, "0" is stored.	0, 1 to 16	System

*1 User: Data to be set by users before the execution of the S(P).CPRTCL instruction.
System: Data to which the CPU module sets the execution result of the S(P).CPRTCL instruction.

Processing details

- Protocols registered with the engineering tool are executed. The communication CH specified by (n1) is used and the protocol to be executed follows the control data of the device specified by (s) or later.
- Protocols are executed consecutively for the number of the protocols specified by (n2) (up to eight protocols) in one instruction execution.
- The number of executed protocols is stored in the device specified by (s)+1.
- The execution of the S(P).CPRTCL instruction and whether it has been completed normally or with an error can be checked with the completion device (d) or resulting of executed protocols device (d)+1.

■Completion device (d)

The completion device turns on in END processing of the scan performed upon completion of the S(P).CPRTCL instruction and turns off in the next END processing.

■Completion status indication device (d)+1

The completion device turns on or off depending on the completion status of the S(P).CPRTCL instruction.

When completed normally :

Unchanged from OFF.

When completed with an error :

Turns on in END processing of the scan performed upon completion of the S(P).CPRTCL instruction and turns off in the next END processing. When the processing is completed abnormally, the error code is stored in the result of executed protocols (s).

Instruction execution timing

The following figure shows the S(P).CPRTCL instruction execution timing.

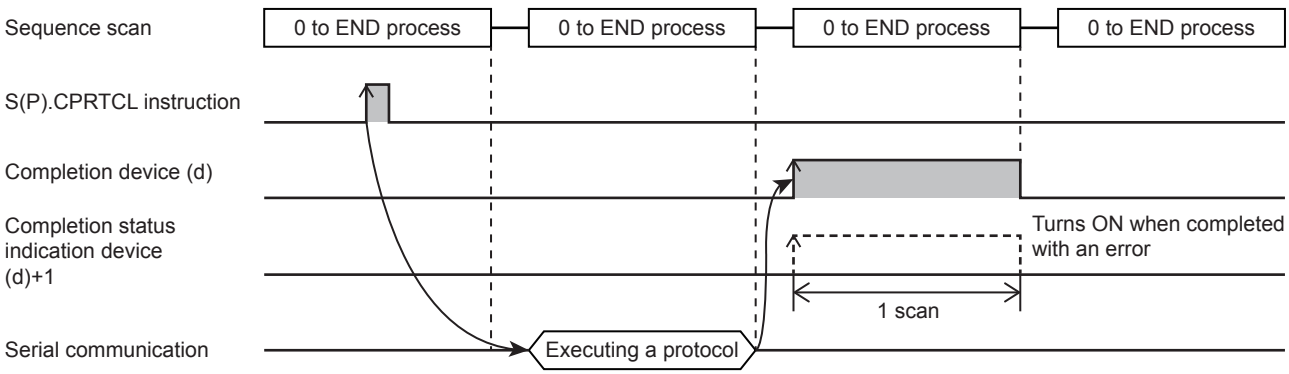

Protocol execution status

The current status of the protocol can be checked with the following devices.

Name	CH1	CH2	CH3	CH4
Protocol execution status	SD9150	SD9170	SD9190	SD9210

The value corresponding to the current protocol execution status is stored in each of the devices above. Any of the values listed in the following table is stored in each of the devices above.

Stored value	Protocol execution status	Description
0	Unexecuted	The protocol has never been executed since the power supply turned on or the reset. Once the protocol has been executed, the status of the protocol does not return to unexecuted until the power supply is turned on or the reset.
1	Waiting for transmission	The status before starting to send a packet to the counterpart device. When the CPU module is preparing or waiting to send a packet, the protocol is in this status.
2	Sending	A packet is being sent to the counterpart device.
3	Waiting for data reception	The CPU module waits to receive data from the counterpart device.
4	Receiving	Data was received from the counterpart device and the receive processing is being executed. Any of the following processing is included in this status. • Data verification processing • General data processing of when a CPU device is specified as a variable
5	Completed	The execution of a protocol has been completed.

Information to judge whether the predefined protocol can be executed or not

Whether the predefined protocol can be executed or not can be judged with the value set in predefined protocol ready (SD9102).

- SD9102 = 0: The protocol cannot be executed because the protocol setting has an error.
- SD9102 = 1: The protocol can be executed because the protocol setting is correct.

The judgment timing is as follows.

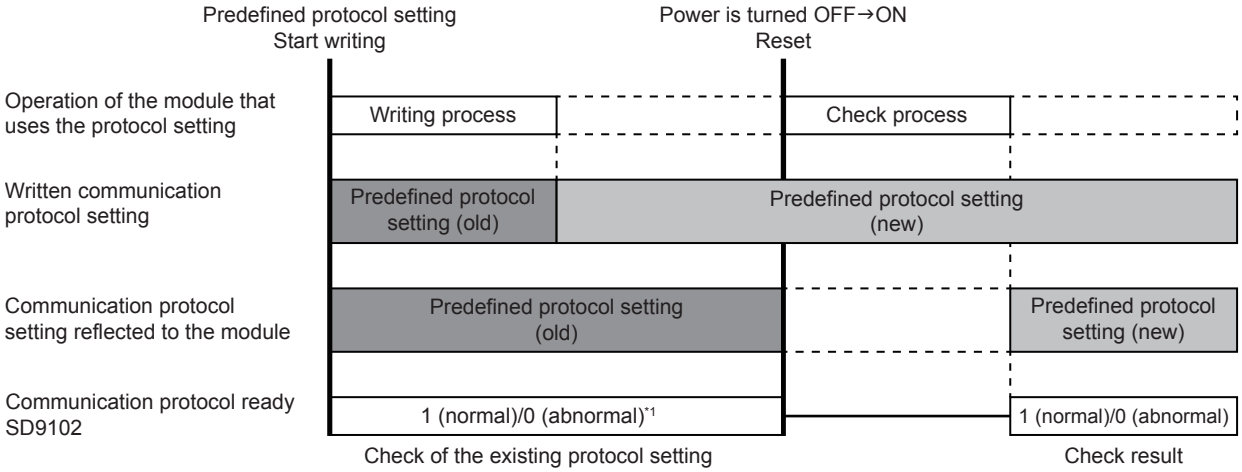

*1 When protocol setting is not written in, it is 0 (error).

Protocol Cancel

Executing protocol can be canceled by the cancel request ("1" is set for the protocol cancel setting value). (☞ Page 233 Protocol cancel specification) Then canceled protocol ends abnormally. When two or more protocols are executed consecutively, executing protocol ends and following protocols are not executed.

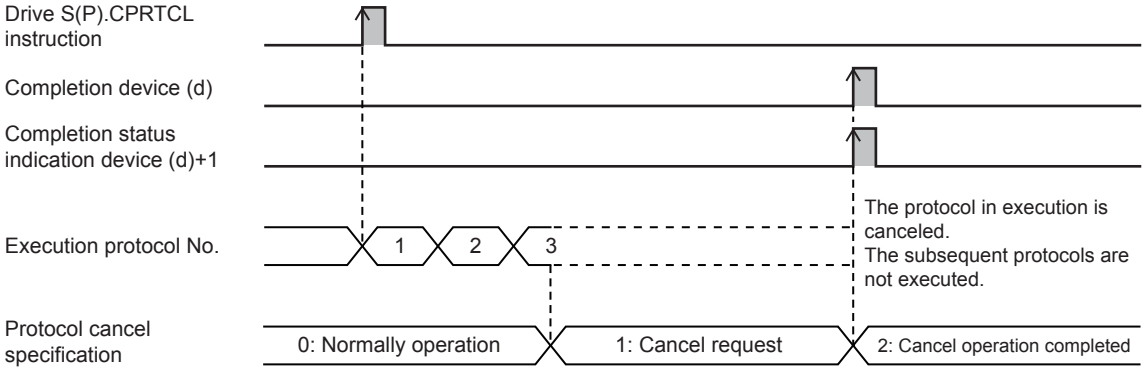

The operation differs as follows depending on the protocol communication in execution and the timing of the cancel request (protocol execution status).

The protocol communication in execution.	Cancel timing (Protocol execution status)	Resulting of executed protocols
Send	Executed protocols start - Before data transmission start (Waiting for transmission)	The packet is not sent.
	Data transmission start - Before send completed (Sending)	The packet is not suspended, let the send complete.
Receive	Send completed - Before data reception start (Waiting for data reception)	The packet is not received.
	After data reception start (Receiving)	The packet is suspended, and the packet is discarded.

Precautions

- If a cancel request is issued while no protocol is being executed, the CPU module completes the cancel request without performing any processing.
- The CPU module periodically checks for a cancel request. For this reason, it may take time until cancel processing is performed after a cancel request is issued.

Send/receive data monitoring function

With the send/receive data monitoring function, send/receive data in the communication with a counterpart device can be monitored.

Set the following devices to execute monitoring or specify the storage destination data device for the send/receive data.

CH1	CH2	CH3	CH4	Setting item		Description	Reference
SD9230	SD9240	SD9250	SD9260	Send/receive data monitoring function setting		The monitoring function can be stopped or started. The monitor function status is displayed after monitoring is started.	Page 233
SD9231	SD9241	SD9251	SD9261	Send/receive data monitoring function option setting	Data area full stop specification	Monitoring stops automatically when the number of monitor data size is larger than the specified one.	Page 234
					1-packet stop specification	Monitoring stops automatically after one send packet or receive packet is monitored.	
SD9232	SD9242	SD9252	SD9262	Monitoring data device specification		Specify a type of word device used as the monitor data area.	Page 234
SD9233	SD9243	SD9253	SD9263	Monitoring data start device No. specification		Specify a start device number of word devices used as the monitor data area.	Page 234
SD9234	SD9244	SD9254	SD9264	Monitoring data size specification		Specify the size of word devices used as the monitor data area in word unit.	Page 235

■Monitor start

When 0001H is set for send/receive data monitoring function setting, the device number of monitoring data and the number of monitor data are initialized and monitoring is started. When monitoring is started, monitoring (0002H) is written to send/receive data monitoring function setting.

■Monitoring

After monitoring is started, data is stored in order of receive data, send data, and receive error starting from the monitor data area. The storage timing of the data is as follows.

- Receive data: When data receiving
- Send data: When data sending
- Receive error data: When sending error detection

The following shows the operations of when the size of the monitored data exceeds the size of the monitor data area.

- When monitoring continued (bit 0: OFF) is set for data area full stop specification

The old data is overwritten with the new data and the monitoring continues.

- When monitoring stop (bit 0: 0N) is set for data area full stop specification

Monitoring stops and monitoring stop (1002H) is written to send/receive data monitoring function settings.

■Monitor stop

Monitoring is stopped by one of the following methods.

- Monitoring is stopped when 0000H is set for send/receive data monitoring function setting.
- When monitoring stop (bit 0: ON) is set for Data area full stop specification

Monitoring is stopped when the data is stored for the size of the monitor data area. At this time, monitoring stop (1002H) is written for send/receive data monitoring function setting.

- When 1-packet stop specified (bit 1: ON) is set for 1-packet stop specification

Monitoring is stopped when the sending of one packet send data or the receiving of one packet receive data is completed. If the size of one packet exceeds the size of the monitor data area, monitoring is stopped when the data is stored for the size of the monitor data area. At this time, monitoring stop (1002H) is written to send/receive data monitoring function setting. The type of packets for which monitoring starts or stops differs depending on the communication type of protocols.

Communication type	Stop requirement
Send Only	Monitoring stops when one send packet is monitored.*1
Receive Only	Monitoring stops when one receive packet is monitored.*1
Send & Receive	Monitoring stops when one send packet and one receive packet are monitored.*1

*1 If the size of one packet exceeds the size of the monitor data area, monitoring stops when the data for size of the monitor data area is stored.

■Monitor data

The data stored in the monitor data area is as follows.

Ex.

Monitoring data device specification: D device (0)

Monitoring data start device No. specification: 0

Monitoring data size specification: 100

Device	Data	Description	Program	Explanation of data
D0	0032H	Monitor data device No.	Number of the device in which the oldest data is stored.	The oldest data is D50. (0032H=50)
D1	0064H	Number of monitor data	Number of monitor data stored in the monitor data area	Number of monitor data is 100 (0064H=100)
D2	1000H	Monitor data 1	Monitor data area	Send data/00H
D3	1001H	Monitor data 2		Send data/01H
D4	1002H	Monitor data 3		Send data/02H
⋮	⋮	⋮		⋮
D99	1003H	Monitor data 98		Send data/03H
D100	1004H	Monitor data 99		Send data/04H
D101	1005H	Monitor data 100		Send data/05H

Two words from the start device number are used for the device number of monitoring data and the number of monitor data. The devices with the device numbers after the first two words are used for the monitor data area.

- Monitoring data device No.

Among the data stored in the monitor data area, the number of the device in which the oldest data is stored. The monitor data device number is initialized when the send/receive data monitoring starts.

The storage range is from the start of the monitor data area to (the start of the monitor data area + monitor data size -1).

■When monitoring continued (bit 0: OFF) is set for data area full stop specification:

The start device numbers of the monitor data area are stored until the size of the data area where the data is stored and set exceeds the size of the monitor data. When the monitor data area is overwritten because the number of monitor data exceeds the monitor data size, the device in which the oldest data is stored is updated.

■When monitoring stop (bit 0: ON) is set for data area full stop specification:

The start device number of the monitor data area is stored.

- Number of monitor data

The number of monitor data stored in the monitor data area is stored. The number of monitor data is initialized when the send/receive data monitoring starts.

The storage range is from 0 to the size of the monitor data.

The number of monitor data does not increase any more after the number of the monitor data reaches the size of the monitor data. (Number of monitor data = Size of the monitor data)

• Monitor data

The monitor data is stored in the following configuration in 1-word units.

b15	b14	b13	b12	b11	b10	b9	b8	b7	b6	b5	b4	b3	b2	b1	b0	Communication type
0	0	0	0	0	0	0	0	Receiving data								When data receiving
0	0	0	1	0	0	0	0	Sending data								When data sending
0	0	1	1	0	0	0	0	0					FE	OVR	PE	When sending error detection

FE: Framing error, OVR: Overrun error, PE: Parity error

One word consists of the send/receive data (1 byte) for lower 8 bits and the data classification/signal monitor for upper 8 bits.

Upper high rank 4bit (b15 to b12)	Upper low rank 4bit (b11 to b8)	Lower 8bit (b7 to b0)
Data type	**Signal monitor**	**Send/receive data**
0 (0000b): Receive data 1 (0001b): Send data 3 (0011b): Receive error	b11: 0	—

Precautions

When the monitor data areas overlap for each channel, the data of the smaller channel number is overwritten with the data of the larger channel number because data are stored from the smaller channel number.

Caution

- If an error occurs in the "n"th protocol while multiple protocols are being executed, the instruction does not execute the "n+1"th protocol and after and is completed with an error.
- If same instructions are executed for the same channel, the subsequent instruction is ignored and is not executed until the preceding instruction is completed.
- If the receive waiting time is set to 0: Infinite wait, the S(P).CPRTCL instruction is not completed until the data specified in the protocol setting is received.

Program example

The following shows an example of a program to execute consecutively the protocols in order of protocol numbers 4, 7, and 5 from the communication board (CH2) with the predefined protocol support function.

Program example

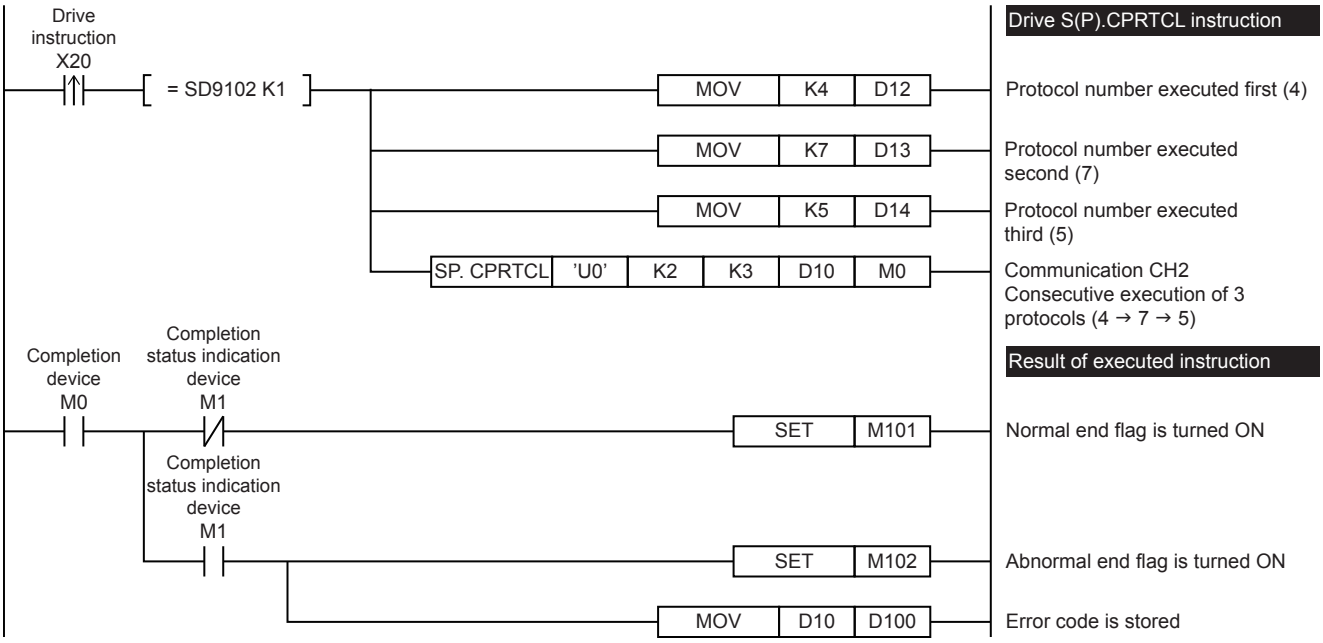

Device	Description		Device	Description
X20	Trigger of drive S(P).CPRTCL instruction		SD9102	Predefined protocol ready
M0	S(P).CPRTCL instruction completion device		D10	Start device of control data
M1	S(P).CPRTCL instruction completion status indication device		D12	Control data (Protocol number executed first)
M101	Execution normal end flag		D13	Control data (Protocol number executed second)
M102	Abnormal end flag		D14	Control data (Protocol number executed third)

When the send/receive data monitoring function is used, add a program as follows.

Program example

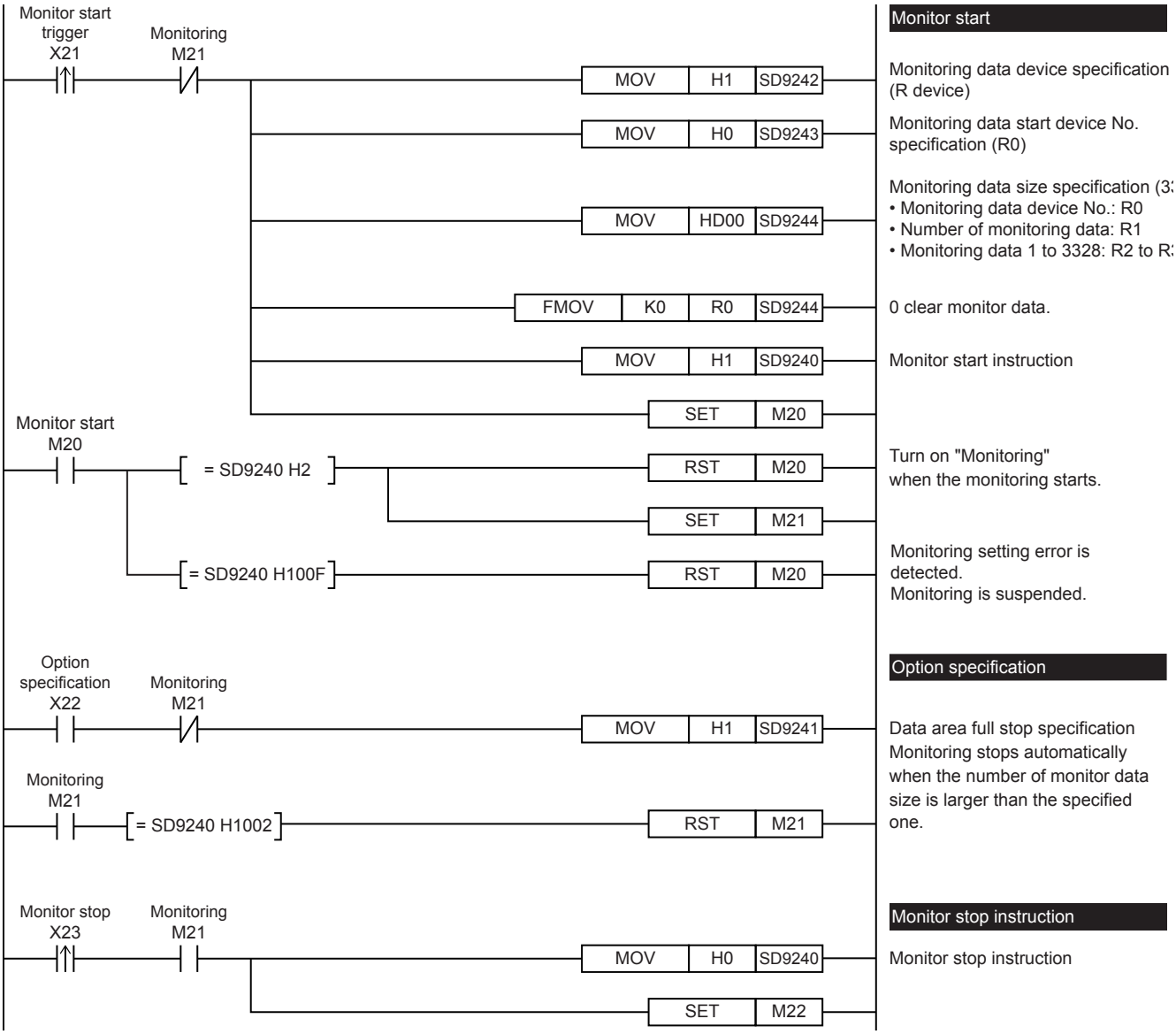

Device	Description
X21	Monitor start trigger
X22	Option specification trigger
X23	Monitor stop trigger
M20	Monitor start contact
M21	Monitoring contact
R0 to R3329	Monitor data area

Device	Description
SD9240	Send/receive data monitoring function setting (CH2)
SD9241	Send/receive data monitoring function option setting (CH2) • Data area full stop specification: Monitor stop • Packet stop specification: 1-packet stop specification
SD9242	Monitoring data device specification (CH2) • Monitoring data device: R device
SD9243	Monitoring data start device No. specification (CH2) • Monitoring data start device No.: 0
SD9244	Monitoring data size specification (CH2) • Monitoring data size: D00H (=3328)

7.9 Troubleshooting

This chapter explains troubleshooting and error codes.

Checking communication status based on LED display

Check the status of the LED display of [RD] and [SD] on the CPU module or the communication board/communication adapter.

LED status		Operation status
RD	SD	
On	On	Data is being sent or received.
On	Off	Data is being received, but not being transmitted.
Off	On	Data is being transmitted, but not being received.
Off	Off	Data is neither being transmitted nor being received.

When normally sending and receiving data with predefined protocol support, the LEDs both flash brightly.
If they do not flash, check the wiring and the communication settings.

Checking installation

- Connection status

The communication cannot be operated if the PLC and the communication board/communication adapter are not connected correctly.
For the connection procedure, refer to the following.
📖MELSEC iQ-F FX5U User's Manual (Hardware)
📖MELSEC iQ-F FX5UC User's Manual (Hardware)

- Wiring

Verify that all communication equipment is correctly wired. (☞ Page 154 Wiring)

Checking sequence program

S(P).CPRTCL instruction cannot be used in the same serial port which is being used for any other communication (such as inverter communication instruction, RS2 instruction). (☞ Page 236 Combined Use of Serial Communication)

Checking the communication settings

Verify that protocol type is "Predefined Protocol Support Function". When the protocol type is not "Predefined Protocol Support Function", communication will not function correctly. (☞ Page 191 Communication Settings)
After changing any communication setting, make sure to turn the PLC power from OFF→ON, or reset.

Checking absence/presence of errors

Serial communication error

■Error flags

If a communication error occurs in the predefined protocol support function, the serial communication error flag turns ON.
Verify that the device specified in the table below is ON.

CH1	CH2	CH3	CH4	Name	Description
SM8500	SM8510	SM8520	SM8530	Serial communication error	Turns ON when an error occurs in serial communication.

■Error codes

When the serial communication error turns ON, the error code is stored in the corresponding device specified in the table below. And be stored in resulting of executed S(P).CPRTCL instruction (operand (s)).

CH1	CH2	CH3	CH4	Name	Description
SD8500	SD8510	SD8520	SD8530	Serial communication error code	When a serial communication error occurs, the error code is stored.

The error codes (hexadecimal) stored in devices are shown as follows.

Error codes (hexadecimal)	Name	Description of error	Error handling
7D00H	Protocol No. setting error	An out-of-range value is set as the number of protocols to be executed continuously, which is set by an argument of the S(P).CPRTCL instruction.	Check the set protocol No.
7D02H	Protocol not ready error	• The S(P).CPRTCL instruction was executed while the predefined protocol is not ready (SD9102 = 0). • The S(P).CPRTCL instruction was executed while the protocol setting data has an error.	• Execute the S(P).CPRTCL instruction while the predefined protocol is ready (SD9102 = 1). • Write the protocol setting data again to the CPU module, and execute the S(P).CPRTCL instruction. • If this error persists even after the data is rewritten, replace the module.
7D10H	Protocol unregistration error	• The protocol No. which had not been registered in the CPU module was specified in the control data for the S(P).CPRTCL instruction. • The S(P).CPRTCL instruction was executed without the protocol setting data written.	• Check the specified protocol No. • Check Protocol registration (SD9132 to SD9135) to confirm that the specified protocol No. is registered. • Write the protocol setting data, and execute the S(P).CPRTCL instruction.
7D12H	Send monitoring time timeout error	• Send monitoring time has timed out. • Although the transmission was retried for the specified number of retries, it did not succeed.	Check if the cables are disconnected.
7D13H	Receive wait timeout error	Receive wait time has timed out.	• Check if the cables are disconnected. • Check if any errors occur on the counterpart device side.
7D16H	Protocol cancel request error	A cancel request was accepted during protocol execution, and the S(P).CPRTCL instruction was completed abnormally.	Check the cancelled protocol in the S(P).CPRTCL instruction's control data (number of executions), and eliminate the cause of the cancellation.
7D17H	Packet size error	A packet of more than 2048 bytes was received.	• Check the data sent from the counterpart device. • Divide the packet data into several parts and send them separately.
7D18H	Insufficient digit number error	When data is received using a protocol including a packet that contains conversion variable (variable number of data), the corresponding data is insufficient.	• Check the data sent from the counterpart device. • Check the packet format of the counterpart device to confirm that the number of digits is set correctly.
7D19H	Abnormal digit number error	When data is received using a protocol including a packet that contains conversion variable (fixed number of data and variable number of digits), the corresponding data corresponding is 0 bytes (0 digits) or exceeds the maximum number of digits.	
7D1AH	Data length error	In the data received from the counterpart device, the Length value does not match the data length of the conversion variable(s).	• Check the packet format of the counterpart device to confirm that the conversion variable is set correctly. ■Check the data sent from the counterpart device to confirm that; • The Length value is correct. • Any of the data corresponding to the conversion variable is not missing.
7D1BH	Value range error	When data is received using a protocol including a packet that contains conversion variable, the corresponding data exceeds the range of values allowed for the CPU module.	• Check the data sent from the counterpart device. ■Check the packet format of the counterpart device to confirm that the conversion size is set correctly. • If the size exceeds the range for word data, change the conversion size setting to double word. • If the size exceeds the range for double word data, change the element to non-conversion variable.
7D20H	Data length size error, data count size error	The value set in the data length storage area or the data count storage area is out of range.	• Check the maximum data length that can be set to the data length storage area, and specify a value that is equal to or smaller than the maximum data length. • Check the maximum number of data that can be set to the data count storage area, and specify a value that is equal to or smaller than the maximum number of data.

Error codes (hexadecimal)	Name	Description of error	Error handling
7D21H	Decimal point place specification error	• An out-of-range decimal point position is set when the number of decimals is set to variable point. • The number of decimals is larger than the number of digits for each data.	• Check the set decimal point position. • Check the number of digits setting, and set the decimal point position so that the number of decimals is less than the number of digits.
7F20H	ASCII → BIN conversion error	• When data is received by conversion variable, the data corresponding to the conversion variable cannot be converted to binary numbers. • When data is received using a protocol including a packet of check code (ASCII hexadecimal or ASCII decimal), the data corresponding to the check code cannot be converted to binary numbers.	• Check the sent message of the counterpart device, modify it if necessary, and then execute communication again. • If the protocol was edited, check the packet format of the counterpart device to check that the set values of the conversion, sign character, number of decimals, delimiter, and number of digit for conversion variable are correct. • If the protocol was edited, check the packet format of the counterpart device to check that the setting for the code type and data length of check code are correct.
7F24H	Sum check error	• The received sum check does not match with the calculated sum check. • The received horizontal parity code does not match with the calculated horizontal parity code. • The received check code does not match with the calculated check code.	• Check the sum check of the counterpart device. • Check the horizontal parity code of the counterpart device. • Check CRC-16 of the counterpart device. ■If the protocol was edited, check if the following values match the packet format of the counterpart device: • Processing method or code type of the check code • Data length • Data flow • Complement calculation • Calculating range
7F67H	Overrun error	The following data was received before the CPU module completes receiving process.	• Reduce the communication speed and then execute communication again. • Check if momentary power failure has occurred on the station with the CPU module (using the special register SD1005). If momentary power failure has occurred, remove the cause.
7F68H	Framing error	• The stop bit settings do not match. • A disturbance occurred in the line due to power supply ON/OFF of the target station. • There is noise on the line. • In the multi drop connection, data is sent simultaneously from multiple devices.	• Match the settings of the CPU module with that of the counterpart device. • Take measures against noise. • In the multi drop connection, insert an interlock so that data is not sent simultaneously from multiple devices.
7F69H	Parity error	• The parity bit settings do not match. • A disturbance occurred in the line due to power supply ON/OFF of the target station. • There is noise on the line. • In the multi drop connection, data is sent simultaneously from multiple devices.	
7F6AH	Buffer full error	The receive buffer overflowed and received data was skipped.	Perform a predefined protocol including data reception to clear the receive buffer.
7FF2H	Predefined protocol setting error	The instruction cannot be executed with the current predefined protocol setting.	Correct the setting value of the predefined protocol.

Operation error

■Error flags

The operation error flag turns ON when an operation error occurs in the S(P).CPRTCL instruction.

Verify that the device specified in the table below is ON.

FX5 Series dedicated				Name	Description
CH1	CH2	CH3	CH4		
SM0				Latest self-diagnostic error (Including the annunciator ON)	Turns ON when an operation error occurs.
SM1				Latest self-diagnostic error (Not including the annunciator ON)	
SM56, SM8067				Operation error	

■Error codes

When the operation error flag turns ON, the error code (hexadecimal) is stored in the operation error code (SD0/SD8067).

The error codes stored in the device are shown as follows.

Error codes (hexadecimal)	Name	Description of error	Error handling
2220H	Parameter not detected	The parameter contents are corrupted.	Write the project again.
2221H 2222H	Parameter error	The parameter setting value exceeded the available range.	Correct the setting value of the parameter and write the project again.
2250H	Module extended parameter error	Any of the following errors exists in the written module extended parameter setting: • The predefined protocol setting has an error. • The data for the set item is corrupted.	• Check the predefined protocol setting in protocol setting data error (SD9120 to 9123), and correct the setting. Then write the setting to the CPU module and execute the S(P).CPRTCL instruction. • If this error persists even after the data is rewritten, replace the module.
2820H	Invalid device designation	The device used for operands of the instruction exceeded the device range.	Check the device range and correct the program.
3100H	Instruction code error	The program contains instructions that cannot be used or interpreted.	• Perform a module diagnosis on the engineering tool to check the details (program location). Check and modify the program (step) indicated by the error jump. • Take measures against noise. • Rewrite the program, reset the CPU module, and perform RUN. If the same error persists, it may be due to a hardware failure of the CPU module. Contact your local Mitsubishi Electric representative.
3405H	Operation error	The operand device number range or data value set for the S(P).CPRTCL instruction is out of range.	Check the data specified by the S(P).CPRTCL instruction.
3582H	Operation error	The instruction that is being used cannot be used in the interruption routine program.	Correct the program so that the instruction that cannot be used in the interruption routine program is not used.

7.10 Related Devices

List of related devices

Special relays

Device No.				Name	Description	R/W
CH1	CH2	CH3	CH4			
SM8500	SM8510	SM8520	SM8530	Serial communication error	Turns ON when an error occurs in serial communication.	R

R: Read only

Special registers

Device No.				Name	Description	R/W
CH1	CH2	CH3	CH4			
SD8500	SD8510	SD8520	SD8530	Serial communication error code	Stores the error code when a serial communication error occurs.	R
SD8502	SD8512	SD8522	SD8532	Serial communication settings	Stores the setting of the communication parameter.	R
SD8503	SD8513	SD8523	SD8533	Serial communication operation mode	This device stores the current communication mode being used.	R
SD9102				Predefined protocol ready	The reflected status after the protocol setting data has been written is stored.	R
SD9120				Predefined protocol setting data error information: Protocol No.	When a protocol setting data error was detected, information to identify the error position is stored.	R
SD9121				Predefined protocol setting data error information: Setting type		R
SD9122				Predefined protocol setting data error information: Packet No.		R
SD9123				Predefined protocol setting data error information: Element No.		R
SD9124				Number of registered predefined protocols	The number of registered protocol setting data is stored.	R
SD9132, SD9133, SD9134, SD9135				Predefined protocol: Protocol registration	The ON/OFF state of the bit corresponding to a protocol number indicates whether the protocol setting data has been registered or not.	R
SD9150	SD9170	SD9190	SD9210	Protocol execution status	The status of a protocol in execution is stored.	R
SD9168	SD9188	SD9208	SD9228	Protocol execution count	The cumulative number of executions of a protocol is stored.	R/W
SD9169	SD9189	SD9209	SD9229	Protocol cancel specification	The protocol in execution can be cancelled with a value to be stored in this area.	R/W
SD9230	SD9240	SD9250	SD9260	Send/receive data monitoring function setting	The setting of the send/receive data monitoring function is stored.	W
SD9231	SD9241	SD9251	SD9261	Send/receive data monitoring function option setting	The option setting of the send/receive data monitoring function is stored.	W
SD9232	SD9242	SD9252	SD9262	Monitoring data device specification	The type of word device used as the monitor data areas is stored.	W
SD9233	SD9243	SD9253	SD9263	Monitoring data start device No. specification	The start device number of word devices used as the monitor data areas is stored.	W
SD9234	SD9244	SD9254	SD9264	Monitoring data size specification	The size of word devices used as the monitor data areas is stored in word units.	R

R: Read only, W: Write only, R/W: Read/Write

Details of related devices

The devices described below are used in predefined protocol support function.

Serial communication error

Turns ON when an error occurs in serial communication. These flags are for check of the serial communication error.

CH1	CH2	CH3	CH4	Description	R/W
SM8500	SM8510	SM8520	SM8530	Turns ON when an error occurs in serial communication.	R

R: Read only

After a device above turns ON, the error code is stored in the corresponding device below.

CH1	CH2	CH3	CH4	Name	Description
SD8500	SD8510	SD8520	SD8530	Serial communication error code	When a serial communication error occurs, the error code is stored.

Precautions

Do not turn ON or OFF with program or engineering tool.

Serial communication error does not turn OFF even if the communication is restored to normal state. The devices turn OFF when power is turned OFF→ON, RUN→STOP, reset or SM50 (Error Detection Reset Completion) is turned ON.

Serial communication error code

When a serial communication error occurs, these devices store the corresponding error codes (☞ Page 225).

CH1	CH2	CH3	CH4	Description	R/W
SD8500	SD8510	SD8520	SD8530	When a serial communication error occurs, the error code is stored.	R

R: Read only

Precautions

Do not change the value with program or engineering tool.

Serial communication error code is not cleared even after communication is restored to normal state. They are cleared by turning the PLC power OFF→ON, RUN→STOP, reset or by SM50 (Error Detection Reset Completion) is turned ON.

Serial communication settings

The communication parameters set in the communication settings are stored when the power is turned OFF→ON or the reset. (☞ Page 191 Communication Settings)

CH1	CH2	CH3	CH4	Description	R/W
SD8502	SD8512	SD8522	SD8532	Stores the setting of the communication parameter.	R

R: Read only

The descriptions of the communication parameters are as follows.

Bit No.	Name	Description	
		0 (bit = OFF)	1 (bit = ON)
b0	Data length	7 bits	8 bits
b1 b2	Parity bit	b2, b1 (0, 0): Not provided (0, 1): Odd (1, 1): Even	
b3	Stop bit	1 bit	2 bits

Bit No.	Name	Description	
		0 (bit = OFF)	1 (bit = ON)
b4 b5 b6 b7	Baud rate	b7, b6, b5, b4 (0,0,1,1): 300 bps (0,1,0,0): 600 bps (0,1,0,1): 1200 bps (0,1,1,0): 2400 bps (0,1,1,1): 4800 bps (1,0,0,0): 9600 bps (1,0,0,1): 19200 bps (1,0,1,0): 38400 bps (1,0,1,1): 57600 bps (1,1,0,1): 115200 bps	

Precautions

Do not turn ON or OFF with program or engineering tool.
They are cleared by turning the PLC power OFF→ON, RUN→STOP or by resetting the system.

Serial communication operation mode

Stores the communication function code used in the serial communication under execution.

CH1	CH2	CH3	CH4	Description	R/W
SD8503	SD8513	SD8523	SD8533	0: MELSOFT Connection or MC protocol 3: N:N Network Communication 5: Non-protocol Communication 6: Parallel Link Communication 7: Inverter Communication 9: MODBUS RTU Communication 12: Predefined protocol support Other than above: Not used	R

R: Read only

Precautions

Do not change the value with program or engineering tool.
These devices store "12" while S(P).CPRTCL instruction is being driven or not, as long the communication mode has not changed.

Predefined protocol ready

The reflected status after the protocol setting data has been written is stored. For details of operation, refer to ☞ Page 218
Information to judge whether the predefined protocol can be executed or not.

Device	Description	R/W
SD9102	0: Normal 1: Abnormal	R

R: Read only

Precautions

Do not change the value with program or engineering tool.
The written protocol setting data is reflected when power is turned OFF→ON or reset.

Predefined protocol setting data error

When a protocol setting data error was detected, information to identify the error position is stored.

■Predefined protocol setting data error information: Protocol No.

When a protocol setting data error was detected, the number of the protocol where the error has occurred is stored. Starting from the smallest protocol number, protocols are checked in order, and the number of the protocol where the error has first been detected is stored.

Device	Description	R/W
SD9120	0: Normal 1 to 64: Protocol No. 65535: Not identifiable*1	R

R: Read only

*1 Damaged protocol setting data (failures of the memory built in the CPU memory module or the SD memory card) can be a factor that causes a setting value to be not identifiable.

Precautions

Do not change the value with program or engineering tool.

■Predefined protocol setting data error information: Setting type

When a protocol setting data error was detected, the setting type number of the protocol where the error has occurred is stored. This setting is valid when 1 to 64 is set in protocol number (SD9120).

Device	Description	R/W
SD9121	0: Packet setting or element setting 1: Configuring detailed setting of protocols 65535: Not identifiable*1	R

R: Read only

*1 Damaged protocol setting data (failures of the memory built in the CPU module or the SD memory card) can be a factor that causes a setting value to be not identifiable.

Precautions

Do not change the value with program or engineering tool.

■Predefined protocol setting data error information: Packet No.

When a protocol setting data error was detected, the number of the packet where the error has occurred is stored. Starting from the smallest number of the send packets and receive packets (expected packets), packets are checked in order, and the packet number of the packet where the error has first been detected is stored. This setting is valid when 0 is set in setting type (SD9121).

Device	Description	R/W
SD9122	0: Send packet 1: Receive packet 65535: Not identifiable*1	R

R: Read only

*1 Damaged protocol setting data (failures of the memory built in the CPU module or the SD memory card) can be a factor that causes a setting value to be not identifiable.

Precautions

Do not change the value with program or engineering tool.

■Predefined protocol setting data error information: Element No.

When a protocol setting data error was detected, the number of the element where the error has occurred is stored. Starting from the smallest element number, elements are checked in order, and the number of the element where the error has first been detected is stored. This setting is valid when 0 is set in Setting type (SD9121).

Device	Description	R/W
SD9123	1 to 32: Element No. 65535: Not identifiable*1	R

R: Read only

*1 Damaged protocol setting data (failures of the memory built in the CPU module or the SD memory card) can be a factor that causes a setting value to be not identifiable.

Precautions

Do not change the value with program or engineering tool.

Number of registered predefined protocols

The number of registered protocol setting data is stored.

Device	Description	R/W
SD9124	1 to 64*1	R

R: Read only

*1 When a protocol setting data error has occurred, 0 is stored.

Precautions

Do not change the value with program or engineering tool.

Predefined protocol: Protocol registration

The ON/OFF state of the bit corresponding to a protocol number indicates whether the protocol setting data has been registered or not.

Device	Description	R/W
SD9132	A bit corresponding to each protocol number is turned on or off. 1 to 16 (⇔ b0 to b15)	R
SD9133	A bit corresponding to each protocol number is turned on or off. 17 to 32 (⇔ b0 to b15)	R
SD9134	A bit corresponding to each protocol number is turned on or off. 33 to 48 (⇔ b0 to b15)	R
SD9135	A bit corresponding to each protocol number is turned on or off. 49 to 64 (⇔ b0 to b15)	R

R: Read only

The following table lists protocol numbers corresponding to bits of each device.

Device	bit*1															
	b15	b14	b13	b12	b11	b10	b9	b8	b7	b6	b5	b4	b3	b2	b1	b0
SD9132	16	15	14	13	12	11	10	9	8	7	6	5	4	3	2	1
SD9133	32	31	30	29	28	27	26	25	24	23	22	21	20	19	18	17
SD9134	48	47	46	45	44	43	42	41	40	39	38	37	36	35	34	33
SD9135	64	63	62	61	60	59	58	57	56	55	54	53	52	51	50	49

*1 When a protocol setting data error has occurred, 0 is stored in all these areas.

Precautions

Do not change the value with program or engineering tool.

Protocol execution status

The status of a protocol in execution is stored. For details, refer to ☞ Page 217.

CH1	CH2	CH3	CH4	Description	R/W
SD9150	SD9170	SD9190	SD9210	0: Unexecuted 1: Waiting for transmission 2: Sending 3: Waiting for data reception 4: Receiving 5: Completed	R

R: Read only

Precautions

Do not change the value with program or engineering tool.

Protocol execution count

The cumulative number of executions of a protocol is stored. Even when a protocol was executed and an error occurred, this execution is also counted and cumulated.

The number of executions is reset to 0 by turning off and on the power supply or resetting the system, and 1 is added every time each protocol is started.

CH1	CH2	CH3	CH4	Description	R/W
SD9168	SD9188	SD9208	SD9228	0 to 65535*1	R

R: Read only

*1 When cumulated 65535 or more, 65535 is stored.

Precautions

Do not change the value with program or engineering tool.

Protocol cancel specification

The protocol in execution can be cancelled with a value to be stored in this area. For details, refer to ☞ Page 218.

CH1	CH2	CH3	CH4	Description	R/W
SD9169	SD9189	SD9209	SD9229	0: Normally operation (do not cancel) 1: Cancel request 2: Cancel operation completed	R/W

R/W: Read/Write

Send/receive data monitoring function setting

The send/receive data monitoring function can be stopped or started by storing a value in hexadecimal. After monitoring has been started, the status of the function is stored. For details, refer to ☞ Page 219 Send/receive data monitoring function.

CH1	CH2	CH3	CH4	Description	R/W
SD9230	SD9240	SD9250	SD9260	0000H: Monitor stop 0001H: Monitor start 0002H: Monitoring (set by system) 1002H: Monitor stop (set by system) 100FH: Monitor setting error (set by system)	R/W

R/W: Read/Write

Send/receive data monitoring function option setting

The data area full stop specification and 1-packet stop specification of the send/receive data monitoring function can be enabled or disabled by storing a value. For details, refer to ☞ Page 219 Send/receive data monitoring function.

CH1	CH2	CH3	CH4	Description	R/W
SD9231	SD9241	SD9251	SD9261	The option setting of the send/receive data monitoring function is stored.	W

W: Write only

The following table lists the setting contents of the send/receive data monitoring function option setting.

Bit No.	Name	Description	
		0 (bit is turn OFF)	1 (bit is turn ON)
b0	Data area full stop specification	Monitor continued (data is overwritten)	Monitor stop
b1	Packet stop specification	1-packet stop specification disabled	1-packet stop specification enabled
b2 to b15	Not used	—	—

Monitoring data device specification

The type of word device used as the monitor data areas with the send/receive data monitoring function is stored. For details, refer to ☞ Page 220 Monitor data.

CH1	CH2	CH3	CH4	Description	R/W
SD9232	SD9242	SD9252	SD9262	0: D device 1: R device 2: W device 3: SW device	W

W: Write only

Precautions

When a device value is changed after the send/receive data monitoring has been started, the change is not reflected. When monitoring is started after the receive data monitoring was stopped (including a stop due to a receive error), the change is reflected.

When the storage destinations of monitor data overlap for each channel, no error occurs and the values in those areas are overwritten with new values.

Monitoring data start device No. specification

The start device number of word devices used as the monitor data areas with the send/receive data monitoring function is stored. For details, refer to ☞ Page 220 Monitor data.

CH1	CH2	CH3	CH4	Description	R/W
SD9233	SD9243	SD9253	SD9263	0 to 32765	W

W: Write only

Precautions

When a device value is changed after the send/receive data monitoring has been started, the change is not reflected. When monitoring is started after the receive data monitoring was stopped (including a stop due to a receive error), the change is reflected.

When the storage destinations of monitor data overlap for each channel, no error occurs and the values in those areas are overwritten with new values.

Monitoring data size specification

The size of word devices used as the monitor data areas with the send/receive data monitoring function is stored in word units. For details, refer to ☞ Page 220 Monitor data.

CH1	CH2	CH3	CH4	Description	R/W
SD9234	SD9244	SD9254	SD9264	0 to 32765	W

W: Write only

Precautions

When a device value is changed after the send/receive data monitoring has been started, the change is not reflected. When monitoring is started after the receive data monitoring was stopped (including a stop due to a receive error), the change is reflected.

When the storage destinations of monitor data overlap for each channel, no error occurs and the values in those areas are overwritten with new values.

APPENDIX

Appendix 1 Combined Use of Serial Communication

Channel specification

The same serial port cannot be used for more than one communication function.

Duplicate channel numbers cannot be specified in communication settings, but an error may still result if channel numbers for communications functions other than the designated function are specified in the following commands.

Inverter communication	Non-protocol communication	Predefined protocol support function
IVCK, IVDR, IVRD, IVWR, IVBWR, IVMC instruction	RS2 instruction	S(P).CPRTCL instruction

If a communications error occurs, check if commands above are using the same channel.

If so, first either delete unnecessary command(s) or correct the channel number, then reset the system by turning the power OFF→ON.

Appendix 2 Operation Image and Data Structure of Predefined Protocol

Operation image of each communication type

Operation image of each communication type of protocol as shown below.

Send only

The specified packet is transmitted once.

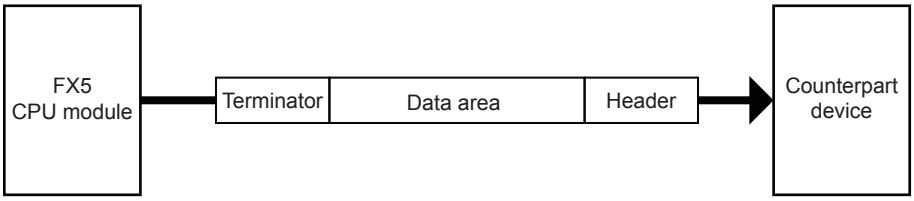

The operation is as follows.

■Normal completion

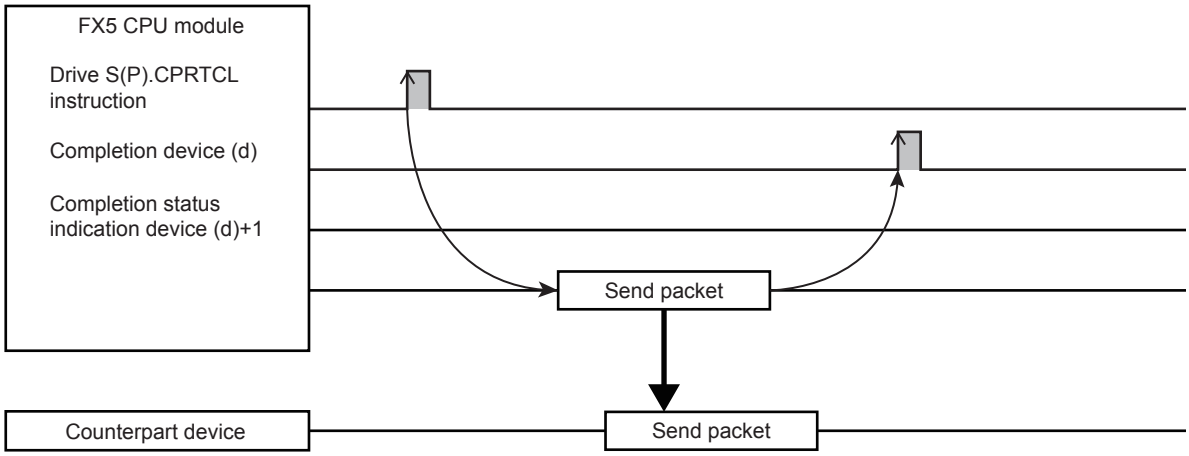

■Error completion (transmission monitoring timeout error)

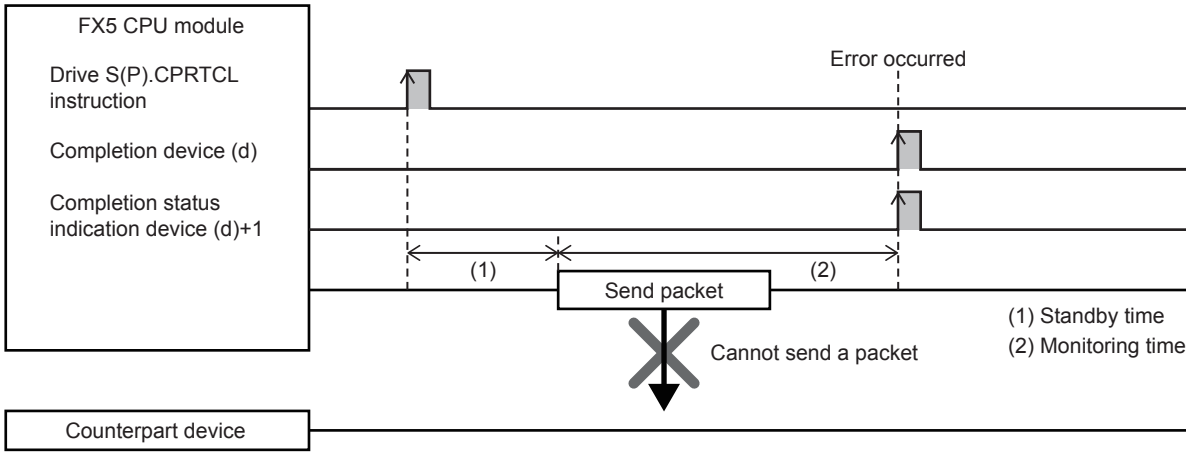

A

Receive only

When data are received from the counterpart device, the process completes when the received data matches the receive packet and the receiving process is performed. For verification mismatch, the receive data is discarded, and the CPU unit waits for the next receive data. (☞ Page 240 Operation Image and Data Structure of Predefined Protocol)
Settable receive packet (expected packet) is up to 16.

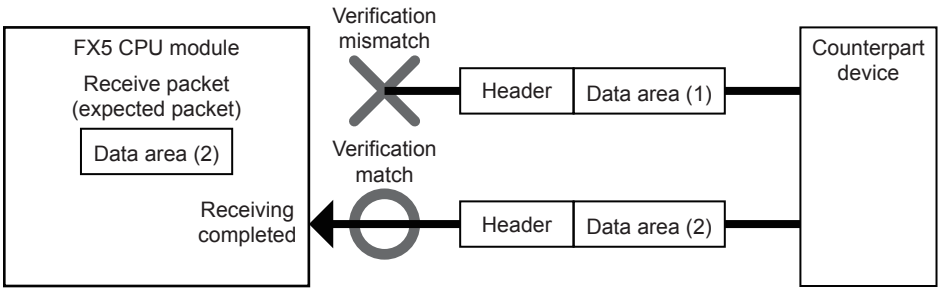

The operation is as follows.

■Normal completion

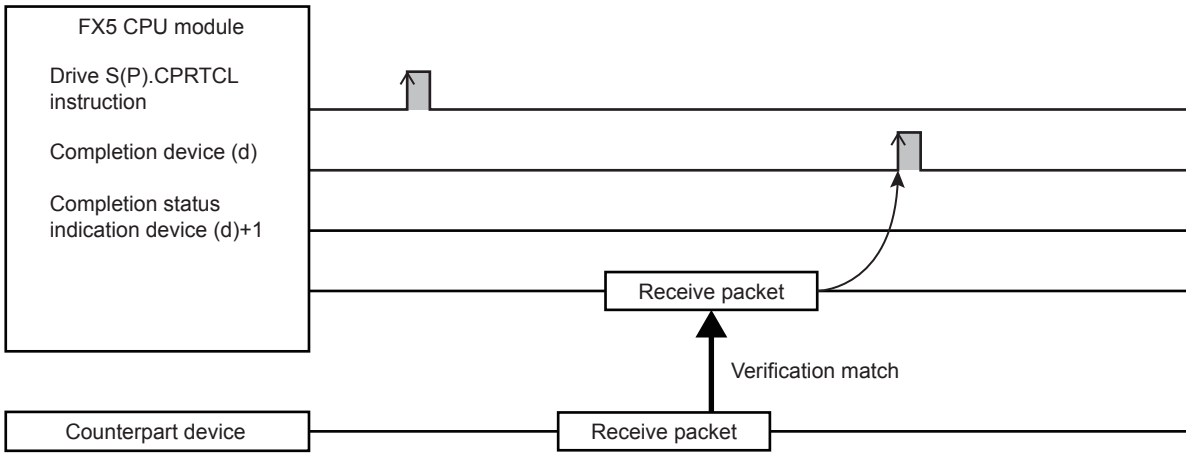

■Error completion (receive wait timeout error)

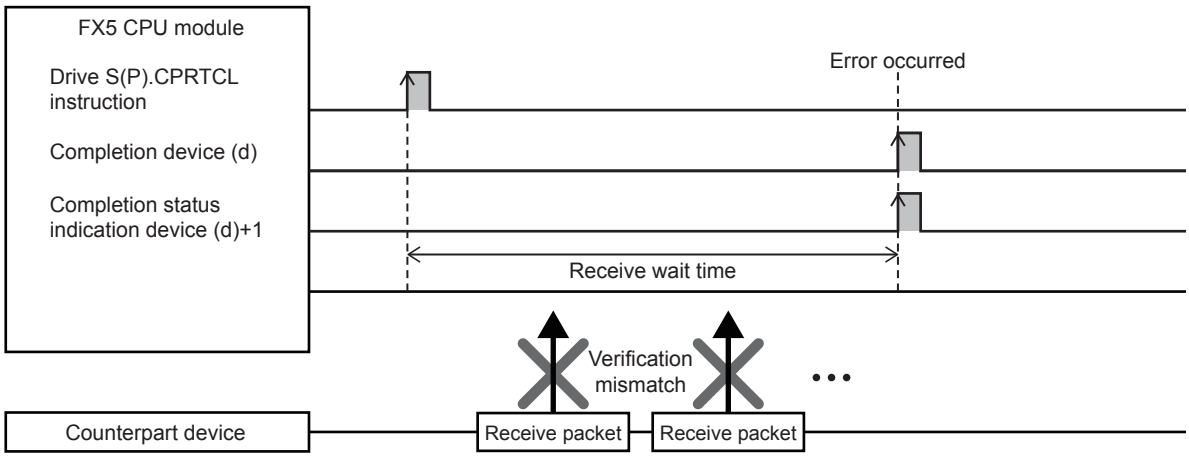

Point

- When variables are included in receive packet elements, variable parts are not verified.
- When more than one receive packet is specified, received data is verified with the receive packet information of the first registered packet in the order of registration. The receive processing is performed once received data match one of the receive packet number, and further verification is not performed.
- The receive packet number which is matched as the result of the verification is stored in the control data of the S(P).CPRTCL instruction.

Send & receive

A packet is sent once, and the status changes to the data receive wait status after the transmission completes normally. Then, data is received from the counterpart device, and the process completes when the received data matches the receive packet and the receiving process is performed. (☞ Page 240 Operation Image and Data Structure of Predefined Protocol)

Settable receive packet (expected packet) is up to 16.

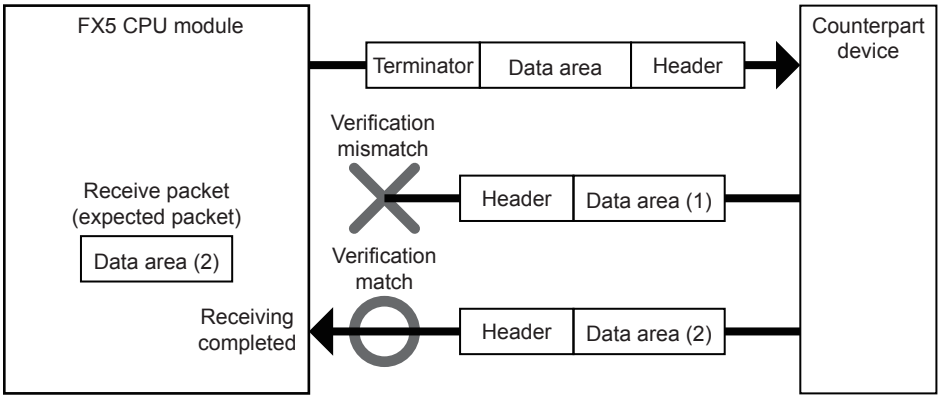

The operation is as follows.

■Normal completion

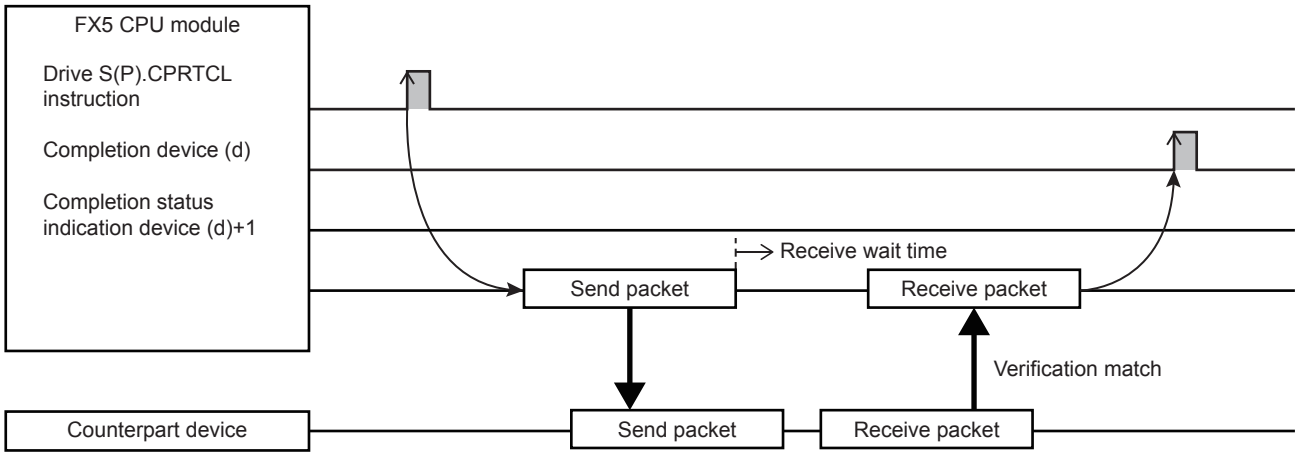

■Error completion (transmission monitoring timeout error)

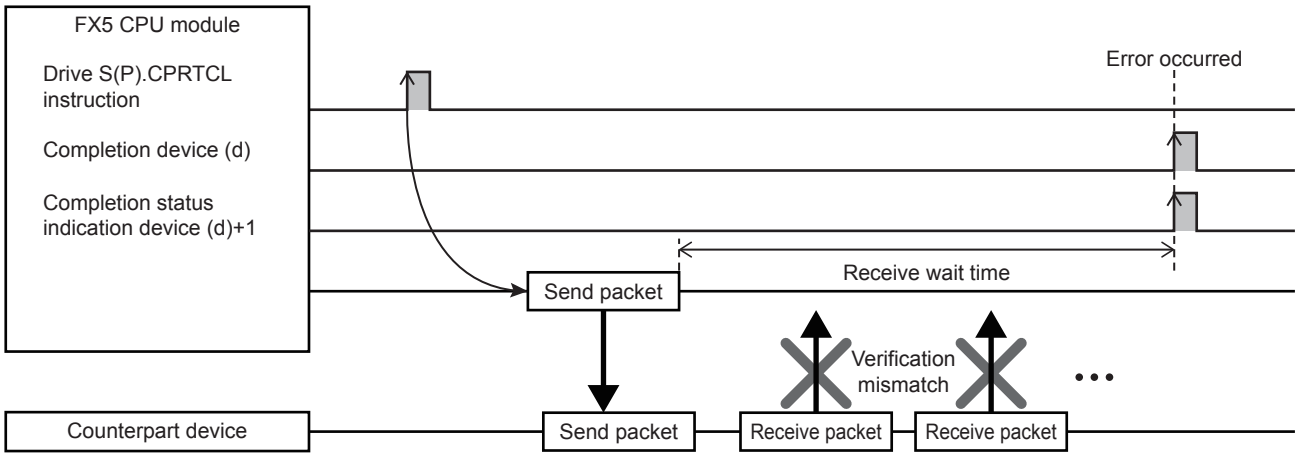

A

Point

- When variables are included in receive packet elements, variable parts are not verified.
- When more than one receive packet is specified, received data is verified with the receive packet information of the first registered packet in the order of registration. The receive processing is performed once received data match one of the receive packet number, and further verification is not performed.
- The receive packet number which is matched as the result of the verification is stored in the control data of the S(P).CPRTCL instruction.

Verification operation

The following shows the verification operations of receive packets (expected packets) of when receive is included in the selected communication type.
Receive data and receive packets are compared in the receive processing, and the processing is completed when the verification result is "matched". Note that the data section of a packet is handled as receive data in the same way as it is handled at send operation.

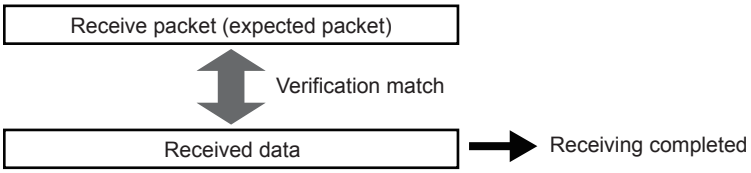

Verification standards

In the verification of receive packets, each element is judged if it is "matched" or not. The standard to judge each element as "matched" depends on each element type. The following table lists verification standards for each element type.

Element type	Verification standards
Header	Judged as "matched" when the data contents are the same.
Terminator	
Static data	
Length	Judged as "matched" when the number of digits is the same.
Non-conversion variable	
Conversion variable	
Check code	Judged as "matched" when the result calculated based on the settings (horizontal parity, sum check, CRC-16) is the same.
Non-verified reception	Judged as "matched" when the number of digits is the same.

Operation performed when multiple receive packets are registered

When data is received, the verification operation is performed in order starting from the receive packet that was first registered. The receive processing is completed when the receive packets and receive data match.

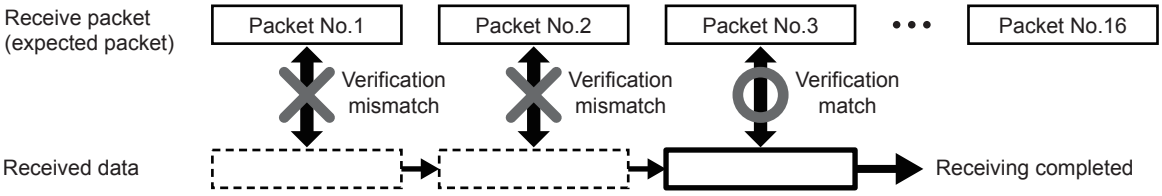

Operation performed for verification mismatch

When receive data does not match with all receive packets, the receive data is discarded. Note that discarding receive data does not cause an error.

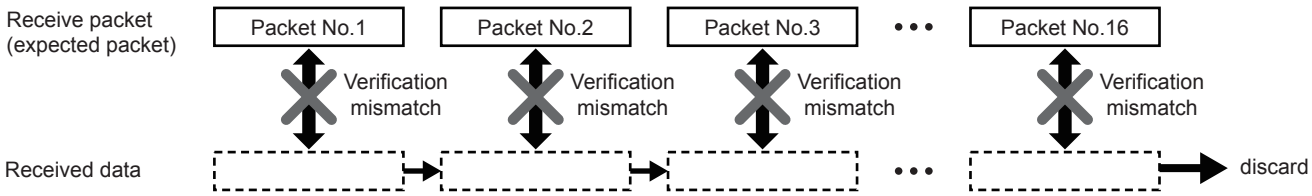

Data examples of Length

Shows the data examples of element length that can be placed in a packet.

Data example

The following is an example in the case where the calculated value of length is 258 bytes in decimal (hexadecimal: 102H).

■Data flow is Forward Direction

Code type	Data length*1			
	1 byte	2 byte	3 byte	4 byte
ASCII hexadecimal	2 (32H)	02 (30H 32H)	102 (31H 30H 32H)	0102 (30H 31H 30H 32H)
ASCII decimal	8 (38H)	58 (35H 38H)	258 (32H 35H 38H)	0258 (30H 32H 35H 38H)
HEX	02H	0102H	000102H	00000102H

*1 Values in ( ) indicate ASCII code.

The send/receive image is as follows.

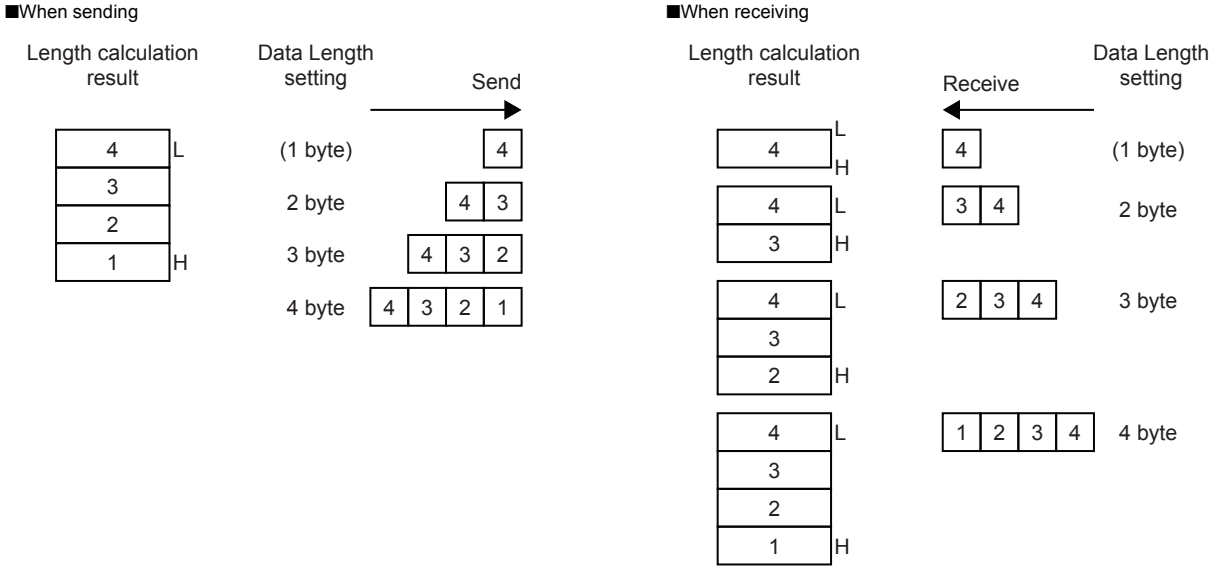

■Data flow is Reverse Direction

Code type	Data length*1			
	1 byte	2 byte	3 byte	4 byte
ASCII hexadecimal	—	20 (32H 30H)	201 (32H 30H 31H)	2010 (32H 30H 31H 30H)
ASCII decimal	—	85 (38H 35H)	852 (38H 35H 32H)	8520 (38H 35H 32H 30H)
HEX	—	0201H	020100H	02010000H

*1 Values in ( ) indicate ASCII code.

The send/receive image is as follows.

■When sending

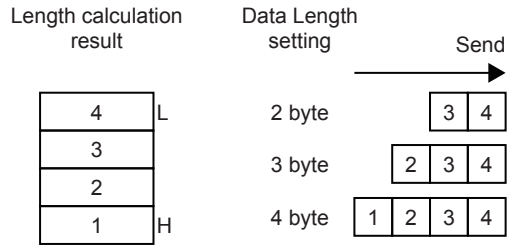

■When receiving

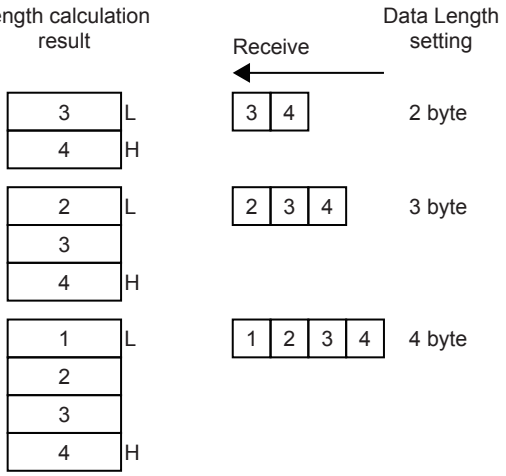

■Data flow is Byte Swap

Code type	Data length*1			
	1 byte	2 byte	3 byte	4 byte
ASCII hexadecimal	—	—	—	1020 (31H 30H 32H 30H)
ASCII decimal	—	—	—	2085 (32H 30H 38H 35H)
HEX	—	—	—	00000201H

*1 Values in ( ) indicate ASCII code.

The send/receive image is as follows.

■When sending

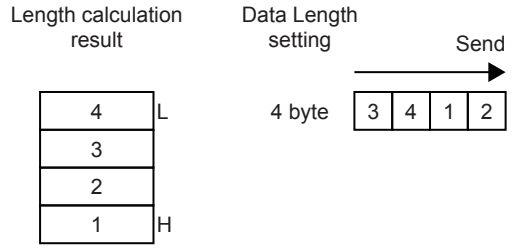

■When receiving

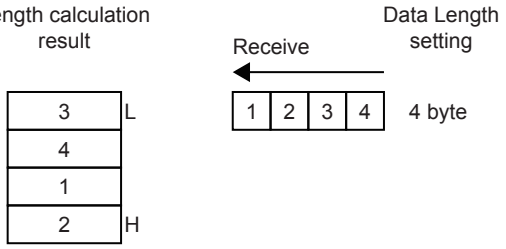

Calculating range

The following shows specification examples of the calculating range of Length.

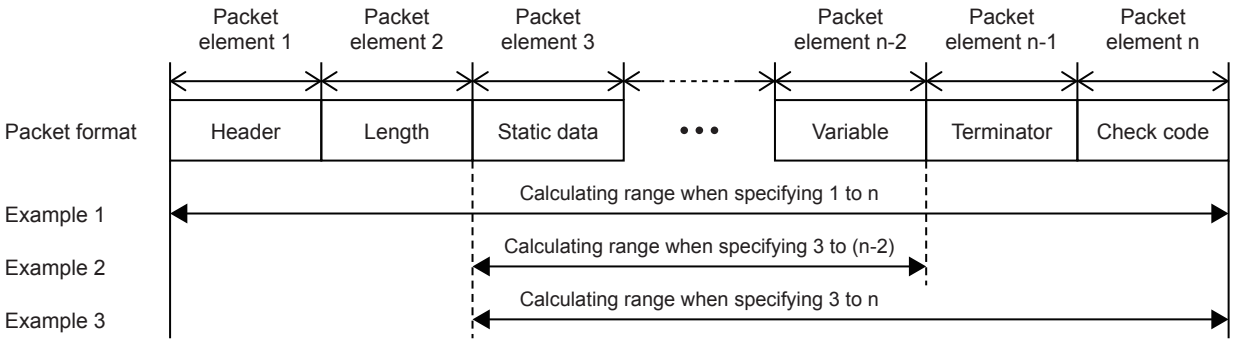

Example 1: Calculating range when 1 and n are specified as the start and the end respectively.

Example 2: Calculating range when 3 and n-2 are specified as the start and the end respectively.

Example 3: Calculating range when 3 and n are specified as the start and the end respectively.

Data examples of Non-conversion Variable

Shows the data examples of element non-conversion variable that can be placed in a packet.

Data example 1

The following table shows data to be stored in the data storage area when the string of send data is 'ABCD' (ASCII code: A=41H, B=42H, C=43H, and D=44H).

Item	Description			
Fixed Length/Variable Length	Fixed Length			
Data Length/Maximum Data Length	4 bytes			
Unit of Stored Data	Lower Byte + Upper Byte		Lower Bytes Only	
Byte Swap	Disable	Enable	Disable	Enable
Data Storage Area Specification	D0			
Data to be stored in data storage area	D0=4241H D1=4443H	D0=4142H D1=4344H	D0=0041H D1=0042H D2=0043H D3=0044H	D0=0042H D1=0041H D2=0044H D3=0043H

Data example 2

The following table shows data to be stored in the data storage area when the string of send data is 'EFG' (ASCII code: A=45H, B=46H, C=43H, and D=47H).

Item	Description			
Fixed Length/Variable Length	Fixed Length			
Data Length/Maximum Data Length	3 bytes			
Unit of Stored Data	Lower Byte + Upper Byte		Lower Bytes Only	
Byte Swap	Disable	Enable	Disable	Enable
Data Storage Area Specification	D0			
Data to be stored in data storage area	D0=4645H D1=0047H	D0=4546H D1=4700H	D0=0045H D1=0046H D2=0047H D3= (any data)	D0=0046H D1=0045H D2=0047H D3= (any data)

Data examples of Conversion Variable

Shows the data examples of element conversion variable that can be placed in a packet.

Data example

The following table shows send data when a packet consists of [Header], [Conversion variable], [Terminator] and data stored in the data storage area is D0=837 (0345H), D1=18 (0012H). (Reference: decimal: 120345H =1180485)

■Data example 1

Item	Description		
Conversion	HEX→ASCII Decimal	HEX→ASCII Decimal	HEX→ASCII Decimal
Fixed Number of Data/Variable Number of Data	Fixed Number of Data	Fixed Number of Data	Fixed Number of Data
Number of Send Data	1	1	1
Number of Send Digits of Data	5	5	Variable Number of Digits
Blank-padded Character at Send	0	Space	— (Not applicable)
Conversion Unit	Word	Word	Word
Sign	Unsigned	Signed	Signed
Sign Character	— (Not applicable)	+	+
Number of Decimals	No Decimal Point	2	No Decimal Point
Delimiter	No Delimiter	Comma	Comma
Data Storage Area Specification	D0	D0	D0
Send data*1	[Header]00837[Terminator]	[Header]+_ _8.37,[Terminator]	[Header]+837,[Terminator]

*1 The "_" indicates a space.

■Data example 2

Item	Description		
Conversion	HEX→ASCII Decimal	HEX→ASCII Decimal	HEX→ASCII Decimal
Fixed Number of Data/Variable Number of Data	Fixed Number of Data	Fixed Number of Data	Fixed Number of Data
Number of Send Data	1	2	2
Number of Send Digits of Data	10	5	5
Blank-padded Character at Send	0	Space	0
Conversion Unit	Double word	Word	Word
Sign	Signed	Unsigned	Signed
Sign Character	+	— (Not applicable)	+
Number of Decimals	8	No Decimal Point	2
Delimiter	No Delimiter	No Delimiter	Comma
Data Storage Area Specification	D0	D0	D0
Send data*1	[Header]+00.01180485[Terminator]	[Header]_ _ 837 _ _ _18[Terminator]	[Header]+008.37,+000.18[Terminator]

*1 The "_" indicates a space.

■Data example 3

Item	Description		
Conversion	HEX→ASCII Hexadecimal	HEX→ASCII Hexadecimal	HEX→ASCII Hexadecimal
Fixed Number of Data/Variable Number of Data	Fixed Number of Data	Fixed Number of Data	Fixed Number of Data
Number of Send Data	1	2	2
Number of Send Digits of Data	Variable Number of Digits	4	Variable Number of Digits
Blank-padded Character at Send	— (Not applicable)	Space	— (Not applicable)
Conversion Unit	Word	Word	Word
Sign	— (Not applicable)	— (Not applicable)	— (Not applicable)
Sign Character	— (Not applicable)	— (Not applicable)	— (Not applicable)
Number of Decimals	— (Not applicable)	— (Not applicable)	— (Not applicable)
Delimiter	Comma	Comma	Comma

Item	Description		
Data Storage Area Specification	D0	D0	D0
Send data*1	[Header]345,[Terminator]	[Header]_ 345,_ _ 12[Terminator]	[Header]345,12[Terminator]

*1 The "_" indicates a space.

Operation of Sign Character

■Sending

Ex.

Conversion: HEX→ASCII Decimal

Number of Send Data: 1

Conversion Unit: Word

Number of Send Digits of Data: 5

- Unsigned

- Signed (Sign Character: +)

- Signed (Negative value)

■Receiving

Ex.

Conversion: ASCII Decimal→HEX

Number of Receive Data: 1

Conversion Unit: Word

Number of Receive Digits of Data: 5

- Unsigned

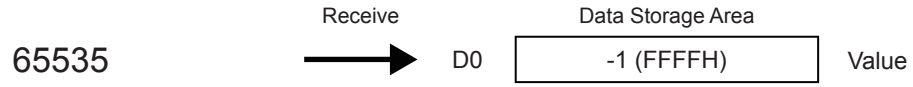

- Signed (Sign Character: +)

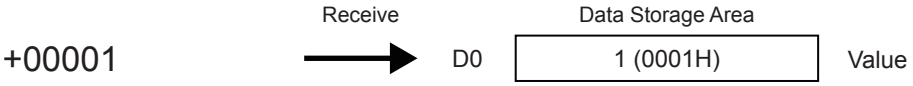

- Signed (Negative value)

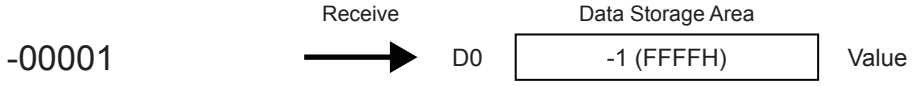

A

Operation of Number of Decimals

■Sending

- Fixed point

Ex.

Conversion: HEX→ASCII Decimal

Number of Send Data: 2

Conversion Unit: Word

Number of Send Digits of Data: 4

Number of Decimals: 1

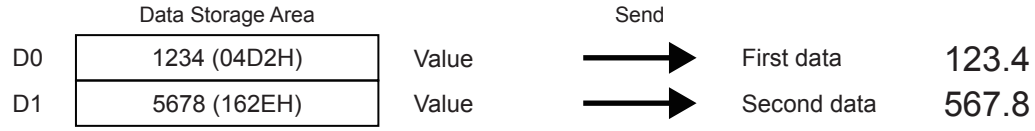

- Variable Point

Ex.

Conversion: HEX→ASCII Decimal

Number of Send Data: 2

Conversion Unit: Word

Number of Send Digits of Data: 4

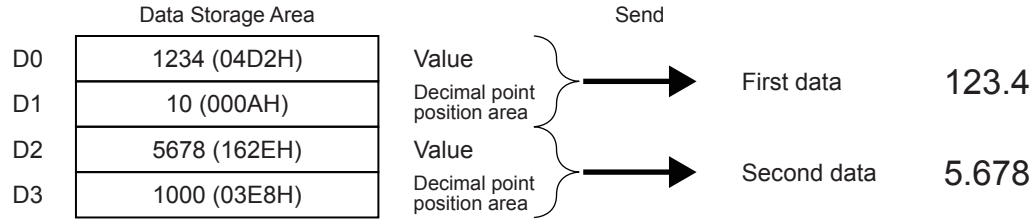

Precautions

An error occurs when a decimal point position is larger than the number of digits for variable point.

(Example) When the number of digits is 3 and the decimal point position is 1000 or larger, an error occurs.

■Receiving

- Fixed point

Ex.

Conversion: ASCII Decimal→HEX

Number of Receive Data: 2

Conversion Unit: Word

Number of Receive Digits of Data: 4

Number of Decimals: 1

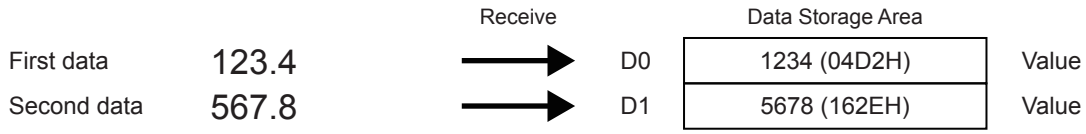

• Variable Point

Ex.

Conversion: ASCII Decimal→HEX

Number of Receive Data: 2

Conversion Unit: Word

Number of Receive Digits of Data: 4

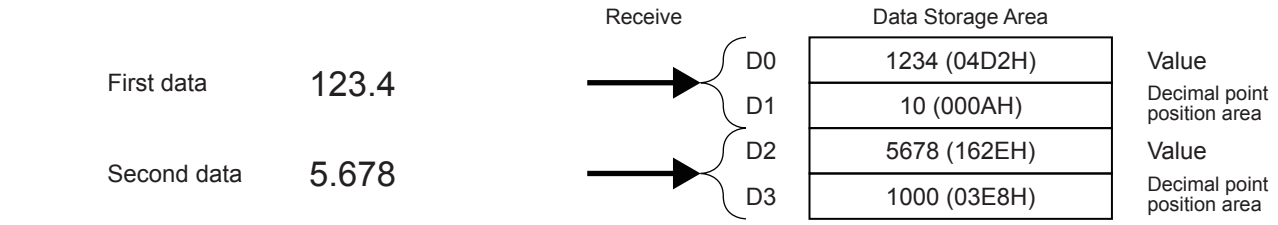

Operation of Delimiter

■Sending

• Comma (Space too)

Ex.

Conversion: HEX→ASCII Decimal

Number of Send Data: 1

Conversion Unit: Word

Number of Send Digits of Data: 4

Ex.

Conversion: HEX→ASCII Decimal

Number of Send Data: 2

Conversion Unit: Word

Number of Send Digits of Data: 4

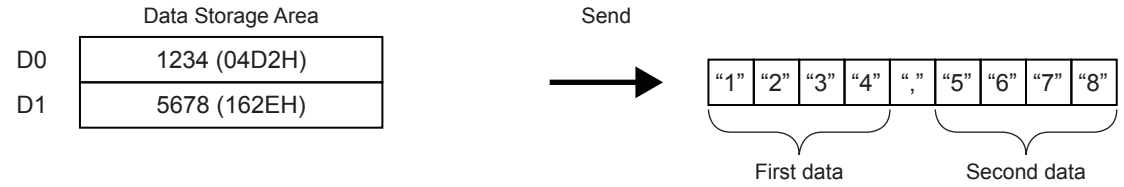

• No Delimiter

Ex.

Conversion: HEX→ASCII Decimal

Number of Send Data: 2

Conversion Unit: Word

Number of Send Digits of Data: 4

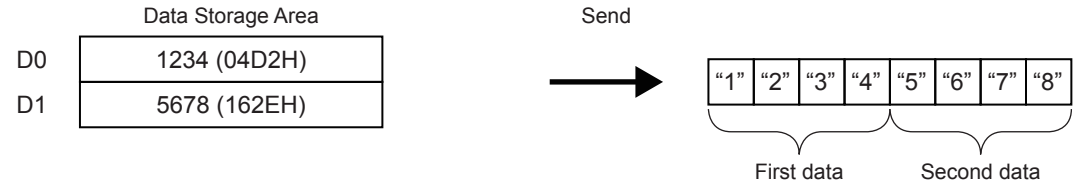

A

■Receiving

- Comma (Space too)

Ex.

Conversion: ASCII Decimal→HEX

Number of Receive Data: 1

Conversion Unit: Word

Number of Receive Digits of Data: 4

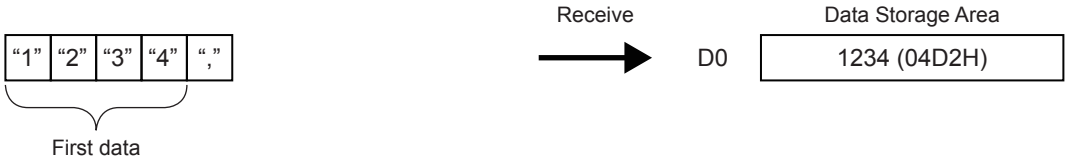

Ex.

Conversion: ASCII Decimal→HEX

Number of Receive Data: 2

Conversion Unit: Word

Number of Receive Digits of Data: 4

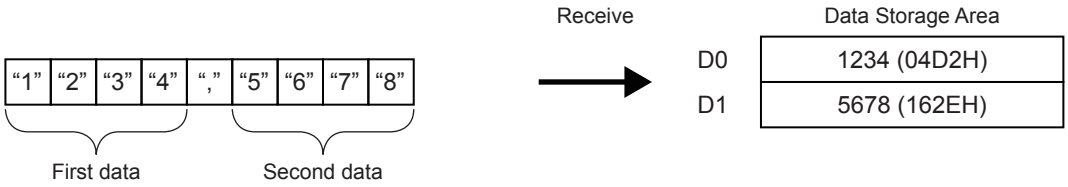

- No Delimiter

Ex.

Conversion: ASCII Decimal→HEX

Number of Receive Data: 2

Conversion Unit: Word

Number of Receive Digits of Data: 4

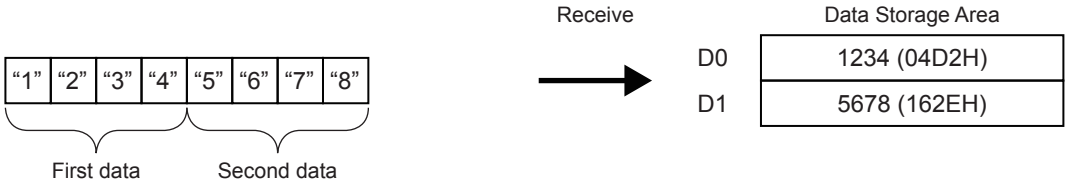

Data examples of Check Code

Shows the data examples of element check code that can be placed in a packet.

Calculation procedure for horizontal parity

The following show procedures for calculating horizontal parities using the following sample data.

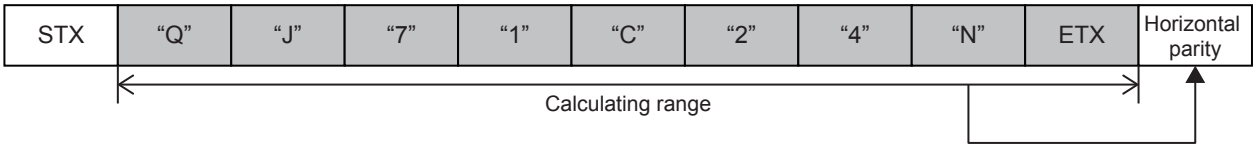

For the packet shown above

```
"Q"   (51H)   0101 0001
                XOR
"J"   (4AH)   0100 1010 = 0001 1011
                          XOR
"7"   (37H)               0011 0111 = 0010 1100
                                      XOR
"1"   (31H)               0011 0001 = 0001 1101
                                      XOR
"C"   (43H)               0100 0011 = 0101 1110
                                      XOR
"2"   (32H)               0011 0010 = 0110 1100
                                      XOR
"4"   (34H)               0011 0100 = 0101 1000
                                      XOR
"N"   (4EH)               0100 1110 = 0001 0110
                                      XOR
ETX   (03H)               0000 0011 = 0001 0101  (Binary)
                                          1    5  (Hexadecimal)
```

■Data Flow: Forward Direction (Data Length: 1)

- No complement calculation is designated

(Reference) Hexadecimal: 15H, Decimal: 21

Code type	Data length (Values in ( ) indicate ASCII code.)			
	1 byte	2 byte	3 byte	4 byte
ASCII hexadecimal	5 (35H)	15 (31H 35H)	015 (30H 31H 35H)	0015 (30H 30H 31H 35H)
ASCII decimal	1 (31H)	21 (32H 31H)	021 (30H 32H 31H)	0021 (30H 30H 32H 31H)
HEX	15H	0015H	000015H	00000015H

- One's complement is designated (One's complement for 0000 0015H: FFFF FFEAH)

When Code Type is ASCII Decimal, the lower one word is extracted and converted from hexadecimal to decimal.
(hexadecimal: FFEAH, decimal: 65514)

Code type	Data length (Values in ( ) indicate ASCII code.)			
	1 byte	2 byte	3 byte	4 byte
ASCII hexadecimal	A (41H)	EA (45H 41H)	FEA (46H451H 41H)	FFEA 846H 46H 45H 41H)
ASCII decimal	4 (34H)	14 (31H 34H)	514 (35H 31H 34H)	5514 (35H 35H 31H 34H)
HEX	EAH	FFEAH	FFFFEAH	FFFFFFEAH

- Two's complement is designated (Two's complement for 0000 0015H: FFFF FFEBH)

When Code Type is ASCII Decimal, the lower one word is extracted and converted from hexadecimal to decimal.
(hexadecimal: FFEBH, decimal: 65515)

Code type	Data length (Values in ( ) indicate ASCII code.)			
	1 byte	2 byte	3 byte	4 byte
ASCII hexadecimal	B (42H)	EB (45H 42H)	FEB (46H 45H 42H)	FFEB (46H 46H 45H 42H)
ASCII decimal	5 (35H)	15 (31H 35H)	515 (35H 31H 35H)	5515 (35H 35H 31H 35H)
HEX	EBH	FFEBH	FFFFEBH	FFFFFFEBH

■Data Flow: Reverse Direction

• No complement calculation is designated

(Reference) Hexadecimal: 15H, Decimal: 21

Code type	Data length (Values in ( ) indicate ASCII code.)			
	1 byte	2 byte	3 byte	4 byte
ASCII hexadecimal	—	51 (35H 31H)	510 (35H 31H 30H)	5100 (35H 31H 30H 30H)
ASCII decimal	—	12 (31H 32H)	120 (31H 32H 30H)	1200 (31H 32H 30H 30H)
HEX	—	1500H	150000H	15000000H

• One's complement is designated (One's complement for 0000 0015H: FFFF FFEAH)

When Code Type is ASCII Decimal, the lower one word is extracted and converted from hexadecimal to decimal.

(hexadecimal: FFEAH, decimal: 65514)

Code type	Data length (Values in ( ) indicate ASCII code.)			
	1 byte	2 byte	3 byte	4 byte
ASCII hexadecimal	—	AE (41H 45H)	AEF (41H 45H 46H)	AEFF (41H 45H 46H 46H)
ASCII decimal	—	41 (34H 31H)	415 (34H 31H 35H)	4155 (35H 35H 31H 34H)
HEX	—	EAFFH	EAFFFFH	EAFFFFFFH

• Two's complement is designated (Two's complement for 0000 0015H: FFFF FFEBH)

When Code Type is ASCII Decimal, the lower one word is extracted and converted from hexadecimal to decimal.

(hexadecimal: FFEBH, decimal: 65515)

Code type	Data length (Values in ( ) indicate ASCII code.)			
	1 byte	2 byte	3 byte	4 byte
ASCII hexadecimal	—	BE (42H 45H)	BEF (42H 45H 46H)	BEFF (42H 45H 46H 46H)
ASCII decimal	—	51 (35H 31H)	515 (35H 31H 35H)	5155 (35H 31H 35H 35H)
HEX	—	EBFFH	EBFFFFH	EBFFFFFFH

■Data Flow: Byte Swap

• No complement calculation is designated

(Reference) Hexadecimal: 15H, Decimal: 21

Code type	Data length (Values in ( ) indicate ASCII code.)			
	1 byte	2 byte	3 byte	4 byte
ASCII hexadecimal	—	—	—	0051 (30H 30H 35H 31H)
ASCII decimal	—	—	—	0012 (30H 30H 31H 32H)
HEX	—	—	—	00001500H

• One's complement is designated (One's complement for 0000 0015H: FFFF FFEAH)

When Code Type is ASCII Decimal, the lower one word is extracted and converted from hexadecimal to decimal.

(hexadecimal: FFEAH, decimal: 65514)

Code type	Data length (Values in ( ) indicate ASCII code.)			
	1 byte	2 byte	3 byte	4 byte
ASCII hexadecimal	—	—	—	FFAE (46H 46H 41H 45H)
ASCII decimal	—	—	—	5541 (35H 35H 34H 31H)
HEX	—	—	—	FFFFEAFFH

• Two's complement is designated (Two's complement for 0000 0015H: FFFF FFEBH)

When Code Type is ASCII Decimal, the lower one word is extracted and converted from hexadecimal to decimal.

(hexadecimal: FFEBH, decimal: 65515)

Code type	Data length (Values in ( ) indicate ASCII code.)			
	1 byte	2 byte	3 byte	4 byte
ASCII hexadecimal	—	—	—	FFBE (46H 46H 42H 45H)
ASCII decimal	—	—	—	5551 (35H 35H 35H 31H)
HEX	—	—	—	FFFFEBFFH

Calculation procedure for sum check

The following show procedures for calculating sum check codes using the following sample data.

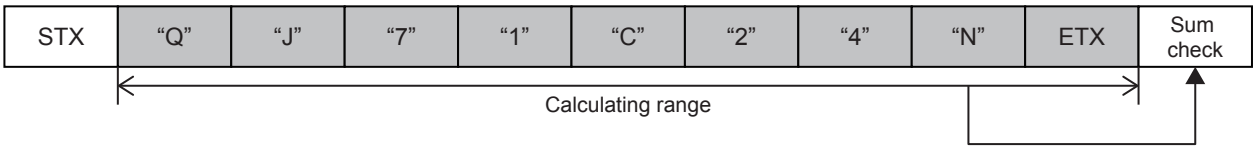

For the data shown above

Sum check value = 51H + 4AH + 37H + 31H + 43H + 32H + 34H + 4EH + 03H = 1FDH

■Data Flow: Forward Direction (Data Length: 1)

• No complement calculation is designated

(Reference) Hexadecimal: 1FDH, Decimal: 509

Code type	Data length (Values in ( ) indicate ASCII code.)			
	1 byte	2 byte	3 byte	4 byte
ASCII hexadecimal	D (44H)	FD (46H 44H)	1FD (31H 46H 44H)	01FD (30H 31H 46H 44H)
ASCII decimal	9 (39H)	09 (30H 39H)	509 (35H 30H 39H)	0509 (30H 35H 30H 39H)
HEX	FDH	01FDH	0001FDH	000001FDH

• One's complement is designated (One's complement for 0000 01FDH: FFFF FE02H)

When Code Type is ASCII Decimal, the lower one word is extracted and converted from hexadecimal to decimal.

(hexadecimal: FE02H, decimal: 65026)

Code type	Data length (Values in ( ) indicate ASCII code.)			
	1 byte	2 byte	3 byte	4 byte
ASCII hexadecimal	2 (32H)	02 (30H 32H)	E02 (45H 30H 32H)	FE02 (46H 45H 30H 32H)
ASCII decimal	6 (36H)	26 (32H 36)	026 (30H 32H 36H)	5026 (35H 30H 32H 36H)
HEX	02H	FE02H	FFFE02H	FFFFFE02H

• Two's complement is designated (Two's complement for 0000 01FDH: FFFF FE03H)

When Code Type is ASCII Decimal, the lower one word is extracted and converted from hexadecimal to decimal.

(hexadecimal: FE03H, decimal: 65027)

Code type	Data length (Values in ( ) indicate ASCII code.)			
	1 byte	2 byte	3 byte	4 byte
ASCII hexadecimal	3 (33H)	03 (30H 33H)	E03 (45H 30H 33H)	FE03 (46H 45H 30H 33H)
ASCII decimal	7 (37H)	27 (32H 37H)	027 (30H 32H 37H)	5027 (35H 30H 32H 37H)
HEX	03H	FE03H	FFFE03H	FFFFFE03H

■Data Flow: Reverse Direction

• No complement calculation is designated

(Reference) Hexadecimal: 1FDH, Decimal: 509

Code type	Data length (Values in ( ) indicate ASCII code.)			
	1 byte	2 byte	3 byte	4 byte
ASCII hexadecimal	—	DF (44H 46H)	DF1 (44H 46H 31H)	DF10 (44H 46H 31H 30H)
ASCII decimal	—	90 (39H 30H)	905 (39H 30H 35H)	9050 (39H30H 35H 30H)
HEX	—	FD01H	FD0100H	FD010000H

• One's complement is designated (One's complement for 0000 01FDH: FFFF FE02H)

When Code Type is ASCII Decimal, the lower one word is extracted and converted from hexadecimal to decimal.

(hexadecimal: FE02H, decimal: 65026)

Code type	Data length (Values in ( ) indicate ASCII code.)			
	1 byte	2 byte	3 byte	4 byte
ASCII hexadecimal	—	20 (32H 30H)	20E (32H 30H 45H)	20EF (32H 30H 45H 46H)
ASCII decimal	—	62 (36H 32H)	620 (36H 32H 30H)	6205 (36H 32H 30H 35H)
HEX	—	02FEH	02FEFFH	02FEFFFFH

• Two's complement is designated (Two's complement for 0000 01FDH: FFFF FE03H)

When Code Type is ASCII Decimal, the lower one word is extracted and converted from hexadecimal to decimal.

(hexadecimal: FE03H, decimal: 65027)

Code type	Data length (Values in ( ) indicate ASCII code.)			
	1 byte	2 byte	3 byte	4 byte
ASCII hexadecimal	—	30 (30H 33H)	30E (33H 30H 45H)	30EF (33H 30H 45H 46H)
ASCII decimal	—	72 (37H 32H)	720 (37H 32H 30H)	7205 (37H 32H 30H 35H)
HEX	—	03FEHH	03FEFFH	03FEFFFFH

■Data Flow: Byte Swap

• No complement calculation is designated

(Reference) Hexadecimal: 1FDH, Decimal: 509

Code type	Data length (Values in ( ) indicate ASCII code.)			
	1 byte	2 byte	3 byte	4 byte
ASCII hexadecimal	—	—	—	10DF (31H 30H 44H 46H)
ASCII decimal	—	—	—	5090 (35H 30H 39H 30H)
HEX	—	—	—	0000FD01H

• One's complement is designated (One's complement for 0000 01FDH: FFFF FE02H)

When Code Type is ASCII Decimal, the lower one word is extracted and converted from hexadecimal to decimal.

(hexadecimal: FE02H, decimal: 65026)

Code type	Data length (Values in ( ) indicate ASCII code.)			
	1 byte	2 byte	3 byte	4 byte
ASCII hexadecimal	—	—	—	EF20 (45H 46H 32H 30H)
ASCII decimal	—	—	—	0562 (30H 35H 36H 32H)
HEX	—	—	—	FFFF02FEH

• Two's complement is designated (Two's complement for 0000 01FDH: FFFF FE03H)

When Code Type is ASCII Decimal, the lower one word is extracted and converted from hexadecimal to decimal. (hexadecimal: FE03H, decimal: 65027)

Code type	Data length (Values in ( ) indicate ASCII code.)			
	1 byte	2 byte	3 byte	4 byte
ASCII hexadecimal	—	—	—	EF30 (45H 46H 33H 30H)
ASCII decimal	—	—	—	0572 (30H 35H 37H 32H)
HEX	—	—	—	FFFF03FEH

Calculation procedure for 16-bit CRC (for MODBUS)

This is an error check method to be used when data are transmitted/received with the RTU mode of the MODBUS protocol. The data length of CRC is fixed to 2 bytes (16 bits), and the CRC is calculated every 1 byte (8 bits) from the start of the calculating range according to the following procedure.

1. Load a 16-bit register whose bits are all '1'.
2. Exclusive OR (XOR) the first 1 byte (8 bits) of the calculating range with 8 bits in above 1.
3. Shift the result of step 2 for one bit right.
4. If the least significant bit in above 2 is '1', exclusive OR (XOR) the result of 3 with the generator polynomial (A001H). If the least significant bit is '0', shift the result of step 3 one bit right (operation described in 3) without the exclusive OR (XOR) operation.
5. Repeat steps 3 and 4 for 8 times.
6. Exclusive OR (XOR) the result of the above 5 with the next 1 byte (8 bits).
7. Repeat step 3 through 6 until all bytes have been processed. The final result is CRC value.
8. The CRC value is stored in a packet in the order of lower 8 bits → upper 8 bits.

Ex.

The calculation example of 16-bit CRC (for MODBUS)

■Packet example

Station number	Function code	16-bit CRC	
02H	07H	41H	12H

■Calculation method of 16-bit CRC (for MODBUS) for the above packet example

CRC error checking procedure	16-bit register (MSB)		Flag	Calculating procedure
(Load a 16-bit register whose bits are all '1') 02H (Station number) Exclusive OR (XOR)	1111 1111 — 1111 1111	1111 1111 0000 0010 1111 1101		1 to 2
Shift 1 Generator polynomial Exclusive OR (XOR)	0111 1111 1010 0000 1101 1111	1111 1110 0000 0001 1111 1111	1	3 to 4
Shift 2 Generator polynomial Exclusive OR (XOR)	0110 1111 1010 0000 1100 1111	1111 1111 0000 0001 1111 1110	1	5
Shift 3 Shift 4 Generator polynomial Exclusive OR (XOR)	0110 0111 0011 0011 1010 0000 1001 0011	1111 1111 1111 1111 0000 0001 1111 1110	0 1	
Shift 5 Shift 6 Generator polynomial Exclusive OR (XOR)	0100 1001 0010 0100 1010 0000 1000 0100	1111 1111 1111 1111 0000 0001 1111 1110	0 1	
Shift 7 Shift 8 Generator polynomial Exclusive OR (XOR)	0100 0010 0010 0001 1010 0000 1000 0001	0111 1111 0011 1111 0000 0001 0011 1110	0 1	
07H (Function code) Exclusive OR (XOR)	— 1000 0001	0000 0111 0011 1001		6

CRC error checking procedure	16-bit register (MSB)		Flag	Calculating procedure
Shift 1 Generator polynomial Exclusive OR (XOR)	0100 0000 1010 0000 1110 0000	1001 1100 0000 0001 1001 1101	1	7
Shift 2 Generator polynomial Exclusive OR (XOR)	0111 0000 1010 0000 1101 0000	0100 1110 0000 0001 0100 1111	1	
Shift 3 Generator polynomial Exclusive OR (XOR)	0110 1000 1010 0000 1100 1000	0010 0111 0000 0001 0010 0110	1	
Shift 4 Shift 5 Generator polynomial Exclusive OR (XOR)	0110 0100 0011 0010 1010 0000 1001 0010	0001 0011 0000 1001 0000 0001 0000 1000	0 1	
Shift 6 Shift 7 Shift 8	0100 1001 0010 0100 0001 0010	0000 0100 1000 0010 0100 0001	0 0 0	
CRC value	12H	41H		8

Check code calculation range

The following shows specification examples of the check code calculation code.

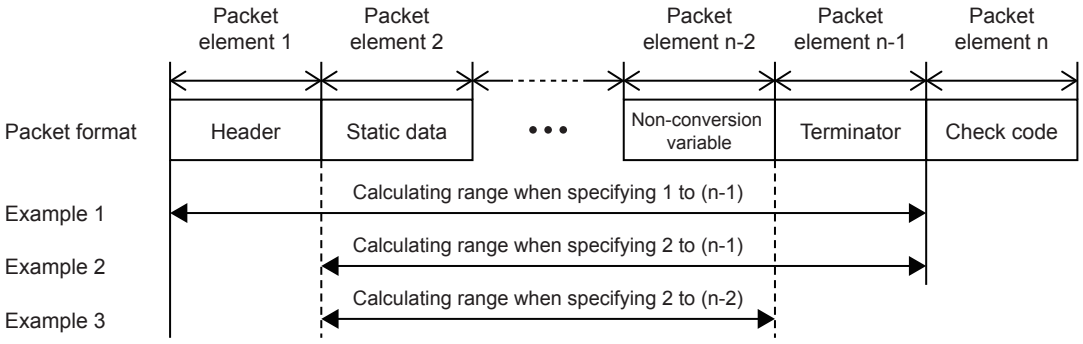

Example 1: Calculating range when 1 and n-1 are specified as the start and the end respectively.

Example 2: Calculating range when 2 and n-1 are specified as the start and the end respectively.

Example 3: Calculating range when 2 and n-2 are specified as the start and the end respectively.

Data examples of Non-verified reception

Shows the data examples of element non-verified reception that can be placed in a packet.

The usage example for non-verified reception is shown below.

■Example of format of packet from other device

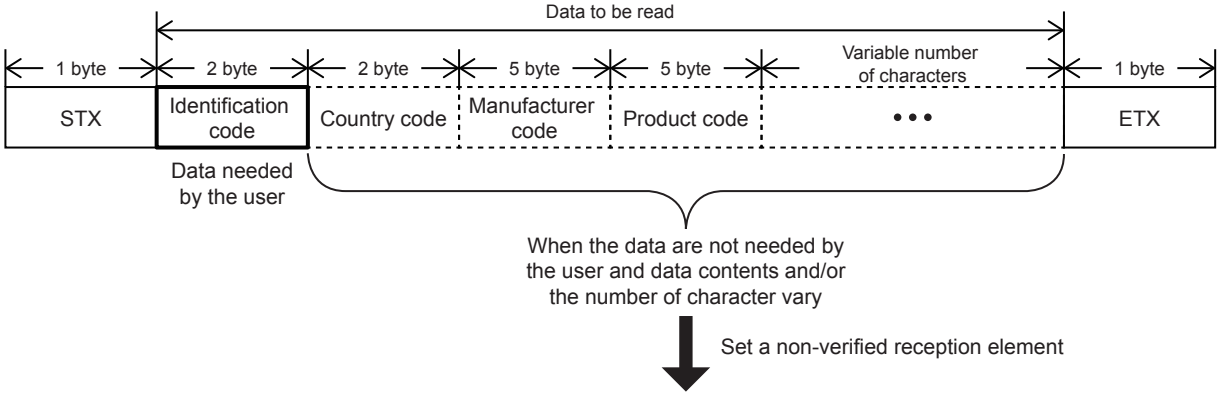

■Example of packet setting

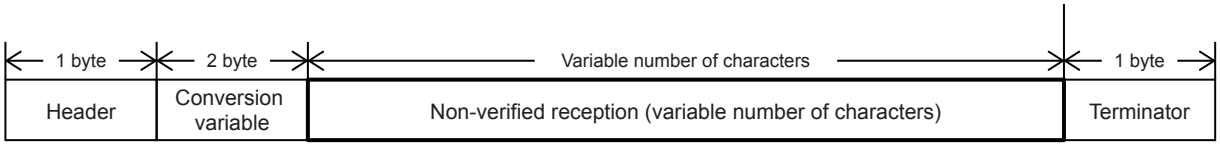

Using a non-verified reception element has the following advantages in the case of the packet format shown above.

- Only the necessary data can be stored in the device memory of a CPU module and buffer memory.
- A single protocol (packet) can handle receive packets that includes data whose contents vary each time.

A

Appendix 3 ASCII Code Table

ASCII code table (8-bit code expressed in hexadecimal)

Hexadecimal value	0	1	2	3	4	5	6	7
0		DLE	SP	0	@	P	`	p
1	SOH	DC1	!	1	A	Q	a	q
2	STX	DC2	"	2	B	R	b	r
3	ETX	DC3	#	3	C	S	c	s
4	EOT	DC4	$	4	D	T	d	t
5	ENQ	NAK	%	5	E	U	e	u
6	ACK	SYN	&	6	F	V	f	v
7	BEL	ETB	'	7	G	W	g	w
8	BS	CAN	(	8	H	X	h	x
9	HT	EM	)	9	I	Y	i	y
A	LF	SUB	*	:	H	Z	j	z
B	VT	ESC	+	;	K	[	k	{
C	FF	FS	,	<	L	\	l	|
D	CR	GS	-	=	M	]	m	}
E	SO	RS	.	>	N	^	n	~
F	SI	US	/	?	O	_	o	DEL

Appendix 4 Added and Enhanced Functions

The functions added or changed with the CPU module and engineering tool, and the supported CPU modules' firmware version and engineering tool software version are given below.

- The firmware version can be confirmed with module diagnosis (CPU diagnosis). Refer to the User's Manual (Hardware) for the CPU module in use for details on diagnosing the module (CPU diagnosis).
- Refer to the 📖GX Works3 Operating Manual for details on the software version.

Add/Change Function	Supported CPU module firmware version	Supported engineering tool software version	Reference
Support message format: format 1 (X, Y HEX), format 4 (X, Y HEX)	"1.040" and above	"1.030G" and above	Page 79
Support FREQROL-F800 inverter	From the first	—	Page 92
Support parallel link function	"1.050" and above	"1.035M" and above	Page 50

A

INDEX

0 to 9

10BASE-T cable 104
16-bit mode 166
8-bit mode 168

C

Check code 212,249
Command 81
Communication type 191,237
Control line. 173
Conversion variable 207,244
CR+LF. 164

D

Distributor 105

F

Full-duplex, bi-directional communication 171

G

Grounding 24,57,79,112,159

H

Half-duplex, bi-directional communication 172
Header 163,200

I

Inverter communication 92
Inverter instruction codes and parameters 94
Inverter operation control instruction 128
Inverter operation monitoring instruction 126
Inverter parameter block write 134
Inverter parameter read 130
Inverter parameter write. 132

L

Length 202,241
Link pattern 19
Link time 20,72

M

MC protocol 70
Multiple inverter commands 137

N

N:N Network. 16
Non-conversion variable 204,243
Non-protocol communication 152
Non-verified reception 213,255
Number of link points. 19

P

Packet. 191,198
Parallel link function 50
Predefined protocol support function. 188
Predefined protocol support instruction 215
Protocol. 193

R

RJ45 connector 105

S

Second parameter specification code 140
Serial data communication. 162
Shielded 107
Static data 203
Sum check. 164
Sum check code. 172

T

Termination resistor 23,77,106,156
Terminator. 164,201
Twisted pair cable. 21,54,75,103,154

MEMO

I

REVISIONS

Revision date	Revision	Description
October 2014	A	First Edition
January 2015	B	■Added functions N:N Network, MC protocol, Predefined protocol support ■Added or modified parts Chapter 1, 2, 3, Section 4.2, 4.5, 4.7, 4.8, 4.10, 5.3, 5.5, 5.6, 5.7, 5.8, 5.9, Chapter 6, Appendix 1, 2
April 2015	C	A part of the cover design is changed.
October 2016	D	■Added function Message format: format 1 (X, Y HEX), format 4 (X, Y HEX), support FREQROL-F800 inverter ■Added or modified parts SAFETY PRECAUTIONS, RELEVANT MANUALS, TERMS, Chapter 1, Section 2.1, 2.4, 2.5, 2.6, 2.7, 2.8, 2.9, 3.1, 3.4, 3.5, 3.6, 3.7, 3.8, 3.9, 4.1, 4.4, 4.5, 4.6, 4.8, 4.9, 4.10, 5.1, 5.5, 5.7, 5.8, 5.9, 6.1, 6.4, 6.5, 6.6, 6.7, 6.8, 6.9, 6.10, Appendix 2, 4, WARRANTY
April 2017	E	■Added function Parallel link function ■Added or modified parts RELEVANT MANUALS, TERMS, Chapter 1, Section 2.9, Chapter 3, Section 4.9, 5.8, 5.10, 6.9, 7.9, 7.10, Appendix 4

This manual confers no industrial property rights or any rights of any other kind, nor does it confer any patent licenses. Mitsubishi Electric Corporation cannot be held responsible for any problems involving industrial property rights which may occur as a result of using the contents noted in this manual.

©2014 MITSUBISHI ELECTRIC CORPORATION

WARRANTY

1. Gratis Warranty Term and Gratis Warranty Range

If any faults or defects (hereinafter "Failure") found to be the responsibility of Mitsubishi occurs during use of the product within the gratis warranty term, the product shall be repaired at no cost via the sales representative or Mitsubishi Service Company. However, if repairs are required onsite at domestic or overseas location, expenses to send an engineer will be solely at the customer's discretion. Mitsubishi shall not be held responsible for any re-commissioning, maintenance, or testing on-site that involves replacement of the failed module.

[Gratis Warranty Term]

The gratis warranty term of the product shall be for one year after the date of purchase or delivery to a designated place. Note that after manufacture and shipment from Mitsubishi, the maximum distribution period shall be six (6) months, and the longest gratis warranty term after manufacturing shall be eighteen (18) months. The gratis warranty term of repair parts shall not exceed the gratis warranty term before repairs.

[Gratis Warranty Range]

(1) The range shall be limited to normal use within the usage state, usage methods and usage environment, etc., which follow the conditions and precautions, etc., given in the instruction manual, user's manual and caution labels on the product.

(2) Even within the gratis warranty term, repairs shall be charged for in the following cases.
   1. Failure occurring from inappropriate storage or handling, carelessness or negligence by the user. Failure caused by the user's hardware or software design.
   2. Failure caused by unapproved modifications, etc., to the product by the user.
   3. When the Mitsubishi product is assembled into a user's device, Failure that could have been avoided if functions or structures, judged as necessary in the legal safety measures the user's device is subject to or as necessary by industry standards, had been provided.
   4. Failure that could have been avoided if consumable parts (battery, backlight, fuse, etc.) designated in the instruction manual had been correctly serviced or replaced.
   5. Relay failure or output contact failure caused by usage beyond the specified life of contact (cycles).
   6. Failure caused by external irresistible forces such as fires or abnormal voltages, and failure caused by force majeure such as earthquakes, lightning, wind and water damage.
   7. Failure caused by reasons unpredictable by scientific technology standards at time of shipment from Mitsubishi.
   8. Any other failure found not to be the responsibility of Mitsubishi or that admitted not to be so by the user.

2. Onerous repair term after discontinuation of production

(1) Mitsubishi shall accept onerous product repairs for seven (7) years after production of the product is discontinued.
Discontinuation of production shall be notified with Mitsubishi Technical Bulletins, etc.

(2) Product supply (including repair parts) is not available after production is discontinued.

3. Overseas service

Overseas, repairs shall be accepted by Mitsubishi's local overseas FA Center. Note that the repair conditions at each FA Center may differ.

4. Exclusion of loss in opportunity and secondary loss from warranty liability

Regardless of the gratis warranty term, Mitsubishi shall not be liable for compensation to:

(1) Damages caused by any cause found not to be the responsibility of Mitsubishi.

(2) Loss in opportunity, lost profits incurred to the user by Failures of Mitsubishi products.

(3) Special damages and secondary damages whether foreseeable or not, compensation for accidents, and compensation for damages to products other than Mitsubishi products.

(4) Replacement by the user, maintenance of on-site equipment, start-up test run and other tasks.

5. Changes in product specifications

The specifications given in the catalogs, manuals or technical documents are subject to change without prior notice.

6. Product application

(1) In using the Mitsubishi MELSEC programmable controller, the usage conditions shall be that the application will not lead to a major accident even if any problem or fault should occur in the programmable controller device, and that backup and fail-safe functions are systematically provided outside of the device for any problem or fault.

(2) The Mitsubishi programmable controller has been designed and manufactured for applications in general industries, etc. Thus, applications in which the public could be affected such as in nuclear power plants and other power plants operated by respective power companies, and applications in which a special quality assurance system is required, such as for railway companies or public service purposes shall be excluded from the programmable controller applications.
In addition, applications in which human life or property that could be greatly affected, such as in aircraft, medical applications, incineration and fuel devices, manned transportation, equipment for recreation and amusement, and safety devices, shall also be excluded from the programmable controller range of applications.
However, in certain cases, some applications may be possible, providing the user consults their local Mitsubishi representative outlining the special requirements of the project, and providing that all parties concerned agree to the special circumstances, solely at the user's discretion.

TRADEMARKS

Microsoft® and Windows® are either registered trademarks or trademarks of Microsoft Corporation in the United States and/or other countries.
Ethernet is a trademark of Xerox Corporation.
Anywire and ANYWIREASLINK is a registered trademark of the Anywire Corporation.
MODBUS® is a registered trademark of Schneider Electric SA.
Phillips is a registered trademark of Phillips Screw Company.
The company name and the product name to be described in this manual are the registered trademarks or trademarks of each company.

Manual number: JY997D55901E
Model: FX5-U-SC-E
Model code: 09R540

When exported from Japan, this manual does not require application to the Ministry of Economy, Trade and Industry for service transaction permission.

MITSUBISHI ELECTRIC CORPORATION

HEAD OFFICE: TOKYO BUILDING, 2-7-3 MARUNOUCHI, CHIYODA-KU, TOKYO 100-8310, JAPAN

Specifications are subject to change without notice.