S60 SERIES
INSTRUCTION MANUAL

CONTROLS

OUTPUT LED (S60…B01/B51/C01/C11/F01/T51)
The yellow LED ON indicates that the N.O. (normally open) output status is closed.

STABILITY LED (S60…B01/B51/C01/C11/F01)
The green LED ON indicates that the received signal has a reserve greater than 30% compared to the output switching value.

POWER ON LED (S60…G00)
The green LED indicates that the sensor is operating.

TRIMMER (S60…B01/B51/C01/C11/F01/T51)
The trimmer can be used to adjust sensitivity; the operating distance increases turning the trimmer clockwise.

WARNING: *The trimmer rotation is limited to 270° by a mechanical stop. Do not apply excessive torque when adjusting (max 40 Nmm).*

INSTALLATION

The sensor can be positioned by means of the three housing's holes using two screws (M4x25 or longer, 1.5 Nm maximum tightening torque) with washers.
Various orientable fixing brackets to ease the sensor positioning are available (please refer to the accessories listed in the catalogue).
The operating distance is measured from the front surface of the sensor optics.
The M12 connector can be oriented at two different positions using the specific fastening spring and rotating the block of 180°.

CONNECTIONS

The connections are compliant to the EN 60947-5-2 standard.

S60…B01/B51/C01/C11/F01/T51

BROWN	1	+	10 … 30 Vdc
WHITE	2		N.C. OUTPUT
BLACK	4		N.O. OUTPUT
BLUE	3	–	0 V

S60…G00

BROWN	1	+	10 … 30 Vdc
WHITE	2		TEST +
BLACK	4		TEST -
BLUE	3	–	0 V

M12 CONNECTOR

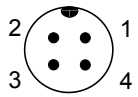

DIMENSIONS

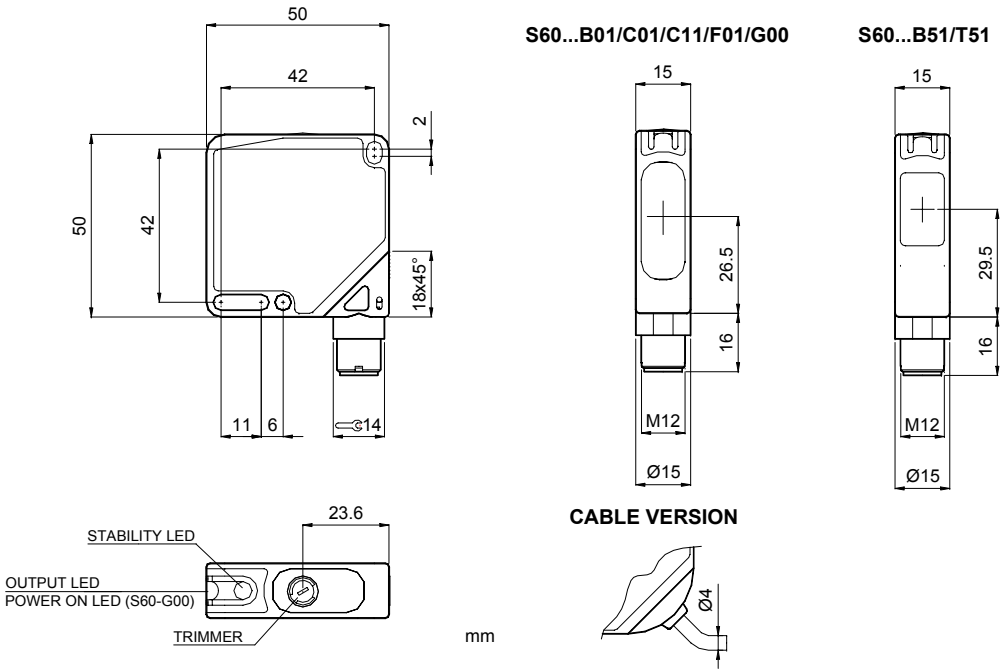

TECHNICAL DATA

Power supply:	10 … 30 Vdc (limit values)
Ripple:	2 Vpp max.
Current consumption (output current excluded):	35 mA max.
Outputs:	PNP or NPN; 30 Vcc max. (short-circuit protection)
Output current:	100 mA max.
Output saturation voltage:	≤ 2 V
Response time:	0.5 ms mod. B01/B51/T51; 1 ms mod. C01/C11/F01
Switching frequency:	1 kHz mod. B01/B51/T51; 500 Hz max. mod. C01/C11/F01
Indicators:	OUTPUT LED (YELLOW) STABILITY LED (GREEN) (mod. B01/B51/C01/C11/F01) POWER ON LED (GREEN) (mod.G00)
Setting:	sensitivity trimmer (mod. B01/B51/C01/C11/F01/T51)
Operating temperature:	-25 … 55 °C
Storage temperature:	-25 … 70 °C
Electrical shock protection:	Class 2
Operating distance (typical values):	B01: 0.1…6 m on R2 B51: 0…3m on R2 (0…2 m on R2 mirror rejection) C01: 1…90 cm C11: 5…200 cm F01/G00: 0…20 m T51: 0…1.5 m on R2
Emission type:	RED (660 nm) mod.B01/B51/C01/T51; INFRARED (880 nm) mod.C11/G00
Ambient light rejection:	according to EN 60947-5-2
Vibrations:	0.5 mm amplitude, 10 … 55 Hz frequency, for every axis (EN60068-2-6)
Shock resistance:	11 ms (30 G) 6 shock for every axis (EN60068-2-27)
Housing material:	ABS
Lens material:	PMMA window, polycarbonate lens / glass window and lens mod. B51/T51
Mechanical protection:	IP67
Connections:	2 m cable ∅ 4 mm / M12-4 pole connector
Weight:	90 g. max. cable vers. / 40 g. max. connector vers.

SETTING

Setting of S60…B01/B51/T51
Position the sensor and reflector aligned on opposite sides.
Turn the sensitivity trimmer to the maximum position.
Moving the sensor both vertically and horizontally, determine the power on and off points of the yellow LED (OUT) and then mount the sensor in the middle of the points defined.
Optimum operation is obtained when the green LED (mod.B01/B51) is ON and the yellow LED is OFF.
B01/B51 models: If necessary reduce sensitivity in order to detect very small targets. In order to improve alignment, repeat the procedure detailed above whilst progressively reducing the sensitivity.

T51 model: Turn the sensitivity trimmer counterclockwise until the yellow LED turns ON *(pos.A)*.
Turn slowly the trimmer again clockwise until the yellow LED turns OFF *(Operating condition, pos.B)*.

Setting of S60…F01/G00
Position the sensors aligned on opposite sides.
Turn the sensitivity trimmer to maximum: moving the sensor both vertically and horizontally, determine the power on and off points of the yellow LED (OUT) and then mount the sensor in the middle of the points defined. Optimum operation is obtained when the green LED is ON and the yellow LED is OFF.
If necessary, reduce sensitivity using the trimmer, in order to detect very small targets. In order to improve alignment, repeat the procedure detailed above whilst progressively reducing the sensitivity.

Setting of S60…C01/C11
Turn the sensitivity trimmer to minimum: the green LED is ON, the yellow LED is OFF.

Position the target to detect in front of the sensor.
Turn the sensitivity trimmer clockwise until the yellow LED turns ON *(Target detected state, pos.A)*.
Remove the target, the yellow LED turns OFF.
Turn the sensitivity trimmer clockwise until the yellow LED turns ON *(Background detected state, pos.B)*.
The trimmer reaches maximum if the background is not detected.
Turn the trimmer to the intermediate position C, between the two positions A and B. The green LED must be ON.

TEST FUNCTION (S60…G00)

The TEST+ and TEST- inputs can be used to inhibit the emitter and verify that the system is correctly operating.
The receiver output should switch when the test is activated while the beam is uninterrupted.
The inputs activating voltage range is 10 … 30 Vdc, whilst respecting the polarity.
The emission is switched off connecting TEST+ to Vdc and TEST- to 0V.

DECLARATION OF CONFORMITY
We DATASENSOR S.p.A. declare under our sole responsibility that these products are conform to the 2004/108 CEE, 2006/25/CE Directives and successive amendments.

WARRANTY
DATASENSOR S.p.A. warrants its products to be free from defects.
DATASENSOR S.p.A. will repair or replace, free of charge, any product found to be defective during the warranty period of 36 months from the manufacturing date.
This warranty does not cover damage or liability deriving from the improper application of DATASENSOR products.

DATASENSOR S.p.A. Via Lavino 265
40050 Monte S. Pietro - Bologna - Italy
Tel: +39 051 6765611 Fax: +39 051 6759324
http://www.datasensor.com e-mail: info@datasensor.com

DATASENSOR S.p.A. cares for the environment: 100% recycled paper.
DATASENSOR S.p.A. reserves the right to make modifications and improvements without prior notification.

826001332 Rev.C

S60…M

Background suppression

S60…N

Foreground / Background suppression

INSTRUCTION MANUAL

CONTROLS

OUTPUT LED
The yellow LED ON indicates that the NO output is closed.

READY/ERROR (bicoloured) LED
When permanently green indicates a normal operating conditions and the sensor is ready to function correctly (stability condition). The alternative green / red blinking indicates a wrong detection.
Please refer to the "SETTING" paragraph for acquisition or setup procedure indications.

SET PUSHBUTTON
A long pressure on the pushbutton activates the self-setting procedure.
The REMOTE input allows the external SET control.

INSTALLATION

The sensor can be positioned by means of the three housing's holes using two screws (M4x25 or longer, 1.5Nm maximum tightening torque) with washers.
Various orientable fixing brackets to ease the sensor positioning are available (please refer to the accessories listed in the general catalogue).
The operating distance is measured from the front surface of the sensor optics.
The M12 connector can be oriented at two different positions using the specific fastening spring and rotating the block of 180°.

CONNECTIONS

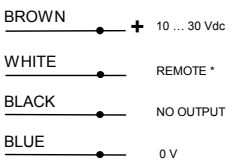

M12 CONNECTOR

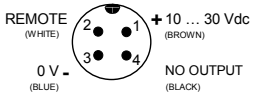

* = Connect to 0 V the REMOTE wire if not used.

TECHNICAL DATA

Power supply:	10 … 30 Vdc (limit values)
Ripple:	2 Vpp max.
Current consumption (output current excluded):	50 mA max.
Outputs:	PNP or NPN; 30 Vdc max. (short-circuit protection)
Output current:	100 mA max.
Output saturation voltage:	≤ 2 V
Response time:	500 µs max.
Switching frequency:	1 KHz
Indicators:	OUTPUT LED (YELLOW) / READY/ERROR LED (GREEN/RED)
Adjustment:	SET pushbutton
Data retention:	EEPROM non volatile memory
Operating temperature:	-10 … 55 °C
Storage temperature:	-20 … 70 °C
Electrical shock protection:	Class 2
Operating distance (typical values):	Proximity 2…20 cm; foreground and/or background suppression 7…20 cm
Spot dimension:	16 mm at 20 cm
Emission type:	RED (670 nm)
Ambient light rejection:	According to EN 60947-5-2
Vibrations:	0.5 mm amplitude, 10 … 55 Hz frequency, for every axis (EN60068-2-6)
Shock resistance:	11 ms (30 G) 6 shock for every axis (EN60068-2-27)
DARK/LIGHT selection:	LIGHT mode with EASY TOUCH™ / automatic with fine acquisition
Housing material:	ABS
Lens material:	PMMA window; PC lens
Mechanical protection:	IP67
Connections:	2 m cable ∅ 4 mm / M12-4 pole connector
Weight:	90 g. max. cable vers. / 40 g. max. connector vers.

SETTING

EASY TOUCH™
The sensor uses the patent-covered EASY TOUCH™ technology that allows a rapid and safe self-setting of the product.
Two different setting possibilities are available:
- *EASY TOUCH™;* press for 2 sec. of the SET pushbutton allows self-setting.
- *FINE DETECTION;* to be used only in particularly critical conditions, this setting procedure is used only when the EASY TOUCH™ is not sufficient.

S60…M setting

- *EASY TOUCH™ (standard detection)*
  Place the background or the object to be suppressed inside the operating range.
  Press the SET pushbutton until the READY/ERROR LED turns OFF.
  Release the SET pushbutton and wait for the READY/ERROR LED to turn green.
  The sensor is now ready to detect all objects in the operating field distinguishing them from the suppressed background (output LED turns ON).
- *Fine detection*
  Place the background or the object to be detected inside the operating range.
  Press the SET pushbutton and keep it pressed until the READY/ERROR LED blinks green.
  Place the object to be suppressed inside the operating distance.
  Press again the SET pushbutton until the READY/ERROR LED turn OFF.
  The sensor selects the best operating conditions according to the acquired points and adjusts itself in the LIGHT mode condition. The given acquisition sequence has to be inverted to select the DARK mode.

S60…N setting

- *EASY TOUCH™ (standard detection)*
  Place the object to be detected in front of the sensor inside the operating range.
  Press the SET pushbutton until the READY/ERROR LED turns OFF.
  Release the SET pushbutton and wait for the READY/ERROR LED to turn green.
  The sensor is ready to detect the object (output LED turns ON) excluding the background and foreground.
- *Fine detection*
  Place the object to be detected in front of the sensor at the nearest operating distance (Point A).
  Press the SET pushbutton and keep it pressed until the READY/ERROR LED blinks green.
  Place the object to be detected in front of the sensor at the farest operating distance (Point B).
  Press again the SET pushbutton until the READY/ERROR LED turns OFF. The sensor is ready to detect the object inside the acquired A-B area, in the LIGHT mode. The given acquisition sequence has to be inverted to select the DARK mode.

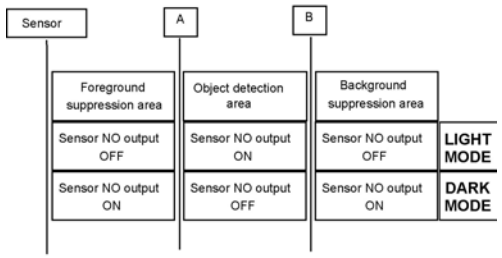

DIMENSIONS

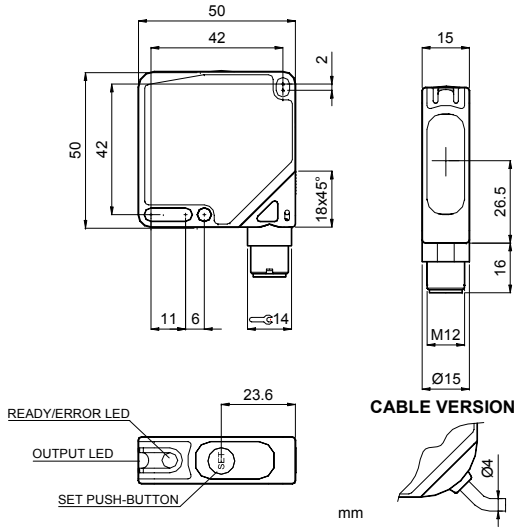

DELAY FUNCTION (S60…M)

Press the SET pushbutton and keep it pressed until the READY/ERROR LED turns off, blinks and turns off again, then release the SET pushbutton.
If the delay function *is not active* the READY/ERROR LED blinks green with 2 quick pulses.
If the delay function *is active* the READY/ERROR LED blinks green with 4 quick pulses.
Press and release immediately the SET pushbutton in order to change the function status, the new function status is indicated by the READY/ERROR LED as the mode before described. The delay function adds 20ms to the duration of the sensor's ON pulse.

REMOTE FUNCTION

The REMOTE wire connected to +Vdc is equal to pressing the SET pushbutton. The *keyboard block* is activated if at the sensor powering the REMOTE wire is connected +Vdc, and thus the SET pushbutton is no longer active. To deactivate the *keyboard block* the sensor has to be turned off and then turned on with the REMOTE wire not connected.

DECLARATION OF CONFORMITY
We DATASENSOR S.p.A. declare under our sole responsibility that these products are conform to the 2004/108 CEE, 2006/25/CE Directives and successive amendments.

WARRANTY
DATASENSOR S.p.A. warrants its products to be free from defects.
DATASENSOR S.p.A. will repair or replace, free of charge, any product found to be defective during the warranty period of 36 months from the manufacturing date.
This warranty does not cover damage or liability deriving from the improper application of DATASENSOR products.

DATASENSOR S.p.A. Via Lavino 265
40050 Monte S. Pietro - Bologna - Italy
Tel: +39 051 6765611 Fax: +39 051 6759324
http://www.datasensor.com e-mail: info@datasensor.com

DATASENSOR S.p.A. cares for the environment: 100% recycled paper.
DATASENSOR S.p.A. reserves the right to make modifications and improvements without prior notification.

826001602 Rev.D

S60-PL SERIES

INSTRUCTION MANUAL

CLASS 1 EN 60825-1 (1994)
LASER PRODUCT

CONTROLS

OUTPUT LED (S60-PL…B01/C01/F01)
The yellow LED on indicates that the N.O. (normally open) output status is closed.
POWER ON LED (S60-PL…B01/C01/F01/G00)
The green LED indicates that the sensor is operating and the laser is active.

TRIMMER (S60-PL …B01/C01/F01)
The trimmer can be used to adjust sensitivity; the operating distance increases turning the trimmer clockwise.

WARNING: *The trimmer rotation is limited to 270° by a mechanical stop. Do not apply excessive torque when adjusting (max 40 Nmm).*

INSTALLATION

The sensor can be positioned by means of the three housing's holes using two screws (M4x25 or longer, 1.5 Nm maximum tightening torque) with washers.
Various orientable fixing brackets to ease the sensor positioning are available (please refer to the accessories listed in the general catalogue).
The operating distance is measured from the front surface of the sensor optics.
The M12 connector can be oriented at two different positions using the specific fastening spring and rotating the block of 180°.

CONNECTIONS

The connections are compliant to the EN 60947-5-2 standard.

S60-PL…B01/C01/F01

BROWN	1	+	10 … 30 Vdc
WHITE	2		N.C. OUTPUT
BLACK	4		N.O. OUTPUT
BLUE	3	–	0 V

S60-PL…G00

BROWN	1	+	10 … 30 Vdc
WHITE	2		TEST +
BLACK	4		NOT USED
BLUE	3	–	0 V

M12 CONNECTOR

DIMENSIONS

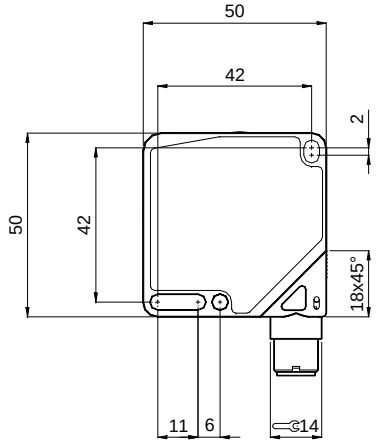

S60-PL...B01/C01/F01/G00

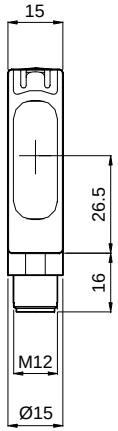

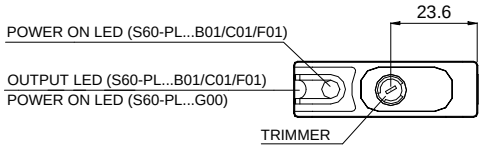

mm

CABLE VERSION

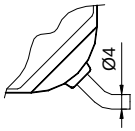

TECHNICAL DATA

Power supply:	10 … 30 Vdc limit values
Ripple:	2 Vpp max.
Consumption (output current excluded):	35 mA max.
Outputs:	N.O. and N.C.; PNP or NPN; 30 Vdc max. (short-circuit protection) (mod. B01/C01/F01)
Ouput current:	100 mA max.
Output saturation voltage:	≤ 2 V
Response time:	250 µs (mod. B01/C01); 333 µs (F01)
Switching frequency:	2 kHz (mod. B01/C01); 1,5 kHz (F01)
Indicators:	OUTPUT LED (YELLOW) (mod. B01/C01/F01) POWER ON LED (GREEN) (mod. B01/C01/F01/G00)
Setting:	senstivity trimmer (mod. B01/C01/F01)
Operating mode:	LIGHT mode on N.O. output / DARK mode on N.C. output (mod.C01) DARK mode on N.O. output / LIGHT mode on N.C. output (mod.B01/F01)
Operating temperature:	-10 … 50 °C
Storage temperature:	-25 … 70 °C
Electrical protection:	Class 2
Operating distance (typical values):	B01: 0.1…20 m on R2 C01: 0…50 cm F01/G00: 0…60 m
Emission type:	RED LASER: Class 1 EN 60825-1 (1994) (mod.B01/C01/G00) Class II CDRH 21 CFR PART 1040.10 (mod.B01/C01/G00) Max. power ≤ 1 mW; Pulse = 4.2 µS (mod.B01/C01); 5 µS (mod.G00); λ = 630…680 nm; Frequency =33.5 kHz (mod.B01/C01); 10 kHz (mod.G00)
Ambient light rejection:	according to EN 60947-5-2
Vibrations:	0.5 mm amplitude, 10 … 55 Hz frequency, for every axis (EN60068-2-6)
Shock resistance:	11 ms (30 G) 6 shock for every axis (EN60068-2-27)
Housing material:	ABS
Lens material:	window in PMMA, lenses in glass and polycarbonate
Mechanical protection:	IP67
Connections:	2 m ∅ 4 mm cable / M12 4-pole connector
Weight:	90 g. max. cable vers. / 40 g. max. connector vers.

SETTING

Setting of S60-PL…B01
Position the sensor and reflector aligned on opposite sides.
Turn the sensitivity trimmer to the maximum position.
Moving the sensor both vertically and horizontally, determine the power on and off points of the yellow LED (OUT) and then mount the sensor in the middle of the points defined.
Reduce sensitivity if very small objects have to be detected. Repeat procedure reducing progressively the sensitivity in orde to improve alignment.

Setting of S60-PL…F01/G00
Position the sensors aligned on opposite sides.
Turn the sensitivity trimmer to maximum: moving the sensor both vertically and horizontally, determine the power on and off points of the yellow LED (OUT) and then mount the sensor in the middle of the points defined so that the yellow LED remains off.
If necessary, reduce sensitivity using the trimmer, in order to detect very small targets. In order to improve alignment, repeat the procedure detailed above whilst progressively reducing the sensitivity.

Setting of S60-PL…C01

Adjust the sentivity trimmer to minimum: the yellow LED is off.
Position the target to detect in front of the sensor.
Turn the sensitivity trimmer clockwise until the yellow LED turns ON *(Target detected state, pos.A).*
Remove the target, the yellow LED turns OFF.
Turn the sensitivity trimmer clockwise until the yellow LED turns ON *(Background detected state, pos.B).*
The trimmer reaches maximum if the background is not detected.
Turn the trimmer to the intermediate position C, between the two positions A and B.

TEST FUNCTION (S60-PL…G00)

The TEST+ input can be used to inhibit the emitter and verify that the system is correctly operating.
The receiver output should switch when the test is activated while the beam is uninterrupted.
The inputs activating voltage range is 10 … 30 Vdc, with respect to 0V input (blue wire pin3).
Connect the TEST+ input to 0V if not used.

DECLARATION OF CONFORMITY
We DATASENSOR S.p.A. declare under our sole responsibility that these products are conform to the 2004/108/CE, 2006/95/CE Directives and successive amendments.

WARRANTY
DATASENSOR S.p.A. warrants its products to be free from defects.
DATASENSOR S.p.A. will repair or replace, free of charge, any product found to be defective during the warranty period of 36 months from the manufacturing date.
This warranty does not cover damage or liability deriving from the improper application of DATASENSOR products.

DATASENSOR S.p.A. Via Lavino 265
40050 Monte S. Pietro - Bologna - Italy
Tel: +39 051 6765611 Fax: +39 051 6759324
http://www.datasensor.com e-mail: info@datasensor.com

DATASENSOR S.p.A. cares for the environment: 100% recycled paper.
DATASENSOR S.p.A. reserves the right to make modifications and improvements without prior notification.

826001581 Rev.C

S60-PL…M

Background suppression

CLASS 1 EN 60825-1 (1994)
LASER PRODUCT

INSTRUCTION MANUAL

CONTROLS

OUTPUT LED
The yellow LED ON indicates that the N.O. (normally open) output is closed. Please refer to the "SETTING" paragraph for the the correct setting procedure.

READY/ERROR LED (bi-coloured)
The bi-coloured LED turned green indicates a normal operating condition and hence the sensor is ready to function correctly (LASER ON).
The red blinking LED indicates a wrong sensor setting. In this case the emission and the green LASER ON LED are turned off.

SET PUSH-BUTTON
A long pressure on the pushbutton activates the self-setting procedure.
The same external SET control of the sensor can be obtained using the REMOTE input.

INSTALLATION

The sensor can be positioned by means of the three housing's holes using two screws (M4x25 or longer, 1.5 Nm maximum tightening torque) with washers.
Various orientable fixing brackets to ease the sensor positioning are available (please refer to the accessories listed in the general catalogue).
The operating distance is measured from the front surface of the sensor optics.
The M12 connector can be oriented at two different positions using the specific fastening spring and rotating the block to 180°.

TECHNICAL DATA

Power supply:	10 … 30 Vdc limit values
Ripple:	2 Vpp max.
Current consumption (output current excluded):	60 mA max.
Outputs:	PNP or NPN; 30 Vdc max. (short-circuit protection)
Output current:	100 mA max.
Output saturation voltage:	≤ 2 V
Response time:	500 µs max.
Switching frequency:	1 KHz
Indicators:	OUTPUT LED (YELLOW) / LASER ON/ERROR LED (GREEN /RED)
Setting:	SET pushbutton
Data retention:	EEPROM non volatile memory
Operating temperature:	-10 … 55 °C
Storage temperature:	-20 … 70 °C
Protezione elettrica:	Class 2
Operating distance (typical values):	5…10 cm
Spot dimension:	1.5 x 1 at 5 cm 1 x 1 at 7 cm 3 x 1.5 at 10 cm
Emission type:	RED LASER 650 nm: Class 1 EN 60825-1 (1994) Class II CDRH 21 CFR PART 1040.10
Ambient light rejection:	according to EN 60947-5-2
Vibrations:	0.5 mm amplitude, 10 … 55 Hz frequency, for every axis (EN60068-2-6)
Shock resistance:	11 ms (30 G) 6 shock for every axis (EN60068-2-27)
DARK/LIGHT selection:	LIGHT mode with EASY TOUCH™ / automatic with fine detection
Housing material:	ABS
Lens material:	window in PMMA; lens in PC
Mechanical protection:	IP67
Connections:	2 m cable ∅ 4 mm / M12-4 pole connector
Weight:	90 g. max. cable vers. / 40 g. max. connector vers.

CONNECTIONS

BROWN — + 10 … 30 Vdc
WHITE — REMOTE *
BLACK — N.O. OUTPUT
BLUE — 0 V

M12 CONNECTOR

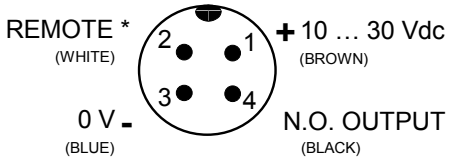

* = Connect to 0 V the REMOTE wire if not used.

SETTING

EASY TOUCH™
The sensor uses the patent-covered EASY TOUCH™ technology that allows a rapid and safe self-setting of the product.
Two different setting possibilities are available:
- *EASY TOUCH™;* press for 2 sec. the SET pushbutton to obtain the self-setting adjustment.
- *FINE DETECTION;* to be used only in particularly critical conditions, this setting procedure is used only when the EASY TOUCH™ is not sufficient.

EASY TOUCH™ (standard detection)

Place the background or the object to be suppressed inside the operating distance.
Press the SET pushbutton until the output LED turns OFF and then release it. The sensor is now ready to detect all objects in the defined operating range. The LIGHT mode is automatically set.

FINE DETECTION

Place the object to detect in front of the sensor at the desired distance.
Press the SET pushbutton and keep it pressed, without moving the object, until the output LED begins to blink. Release the button. Place the background to be suppressed. Press the SET pushbutton and wait unit the output LED turns OFF and release the button.

According to the points detected the sensor selects the best operating condition and sets the LIGHT functioning mode.
To select the opposite operating mode, invert the defined detection sequence.
If the red ERROR LED blinks the detection has failed due to insufficient contrast and the procedure has to be repeated from the beginning.

DIMENSIONS

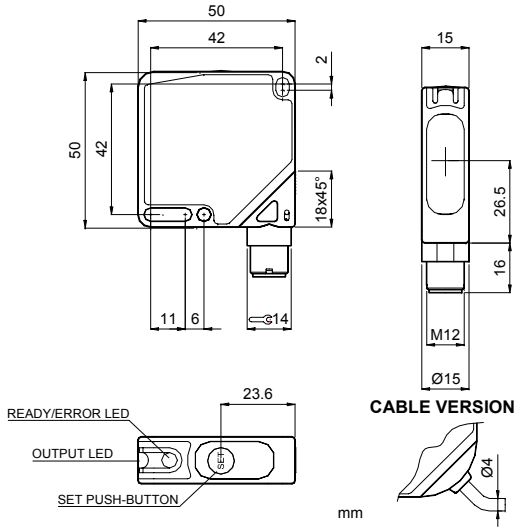

DELAY FUNCTION

Press the SET pushbutton and keep it pressed until the READY/ERROR LED turns off, blinks and turns off again, then release the SET pushbutton.
If the delay function *is not active* the READY/ERROR LED blinks green with 2 quick pulses.
If the delay function *is active* the READY/ERROR LED blinks green with 4 quick pulses.
Press and release immediately the SET pushbutton in order to change the function status, the new function status is indicated by the READY/ERROR LED as described beforehand. The delay function adds 20 ms to the duration of the sensor's ON pulse.

REMOTE FUNCTION

The REMOTE wire connected to + Vdc is equal to pressing the SET pushbutton. The *keyboard block* is activated if at the sensor powering the REMOTE wire is connected + Vdc, and thus the SET pushbutton is no longer active. To deactivate the *keyboard block* the sensor has to be turned off and then turned on with the REMOTE wire not connected to 0V.

DECLARATION OF CONFORMITY
We DATASENSOR S.p.A. declare under our sole responsibility that these products are conform to the 2004/108 CEE, 73/23 CEE Directives and successive amendments.

WARRANTY
DATASENSOR S.p.A. warrants its products to be free from defects.
DATASENSOR S.p.A. will repair or replace, free of charge, any product found to be defective during the warranty period of 36 months from the manufacturing date.
This warranty does not cover damage or liability deriving from the improper application of DATASENSOR products.

DATASENSOR S.p.A. Via Lavino 265
40050 Monte S. Pietro - Bologna - Italy
Tel: +39 051 6765611 Fax: +39 051 6759324
http://www.datasensor.com e-mail: info@datasensor.com

DATASENSOR S.p.A. cares for the environment: 100% recycled paper.
DATASENSOR S.p.A. reserves the right to make modifications and improvements without prior notification.

826001721 Rev.B

S60…U

Luminescence sensor

INSTRUCTION MANUAL

CONTROLS

OUTPUT LED
The yellow LED ON indicates that the N.O. (normally open) output status is closed.

READY/ERROR LED (bicolour)
When the bicoloured LED is continuously green, the sensor is operating in a normal condition and it is ready to function correctly (stability condition).
The red and green blinking of the LED indicates a wrong sensor setting. Please refer to the "SETTING" paragraph to get the correct setting procedure.

SET PUSH-BUTTON
A long pressure on the push-button activates the self-setting procedure.
The REMOTE input allows the external control of the SET push-button.

INSTALLATION

The sensor can be positioned by means of the three housing's holes using two screws (M4x25 or longer, 1.5 Nm maximum tightening torque) with washers.
Various orientable fixing brackets to ease the sensor positioning are available (please refer to the accessories listed in the general catalogue).
The operating distance is measured from the front surface of the sensor optics.
The M12 connector can be oriented at two different positions using the specific fastening spring and rotating the block of 180°.

CONNECTIONS

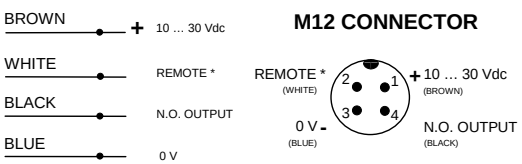

* = Connect the REMOTE wire to 0 V if not used.

NOTE
If a setting error will occur please repeat again the EASY TOUCH™ setting procedure, in order to be sure to restart the setting procedure correctly.

DIMENSIONS

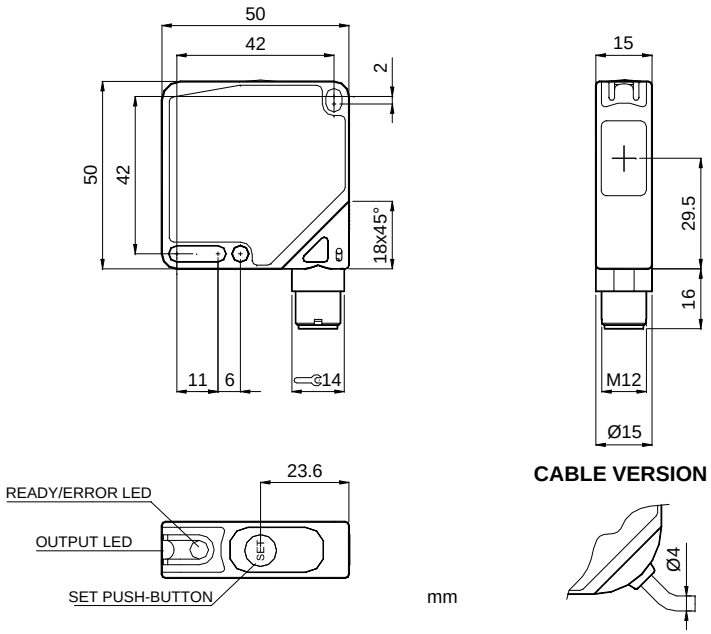

TECHNICAL DATA

Power supply:	10 … 30 Vdc (limit values)
Ripple:	2 Vpp max.
Current consumption (output current excluded):	30 mA max.
Outputs:	PNP or NPN; 30 Vdc max. (short-circuit protection)
Output current:	100 mA max.
Output saturation voltage:	≤ 2 V
Response time:	250 µs max.
Switching frequency:	2 KHz
Indicators:	OUTPUT LED (YELLOW) / READY/ERROR LED (GREEN/RED)
Adjustment:	SET push-button
Data retention:	non volatile EEPROM memory
Operating temperature:	-10 … 55 °C
Storage temperature:	-20 … 70 °C
Electrical shock protection:	Class 2
Operating distance (typical values):	0…40 mm range, maximum signal at 10 mm
Minimum spot dimension:	1.5 mm at 10 mm
Emission type:	UV LED (370 nm)
Ambient light rejection:	according to EN 60947-5-2
Vibrations:	0.5 mm amplitude, 10 … 55 Hz frequency, for every axis (EN60068-2-6)
Shock resistance:	11 ms (30 G) 6 shock for every axis (EN60068-2-27)
DARK/LIGHT selection:	LIGHT mode with EASY TOUCH™ / Automatic with fine detection
Housing:	ABS
Lens:	glass window (sloped); glass lens
Mechanical protection:	IP67
Connections:	2 m cable ∅ 4 mm / M12-4 pole connector
Weight:	90 g. max. cable vers. / 40 g. max. connector vers.

DELAY FUNCTION

Press the SET push-button and keep it pressed until the READY/ERROR LED turns off, blinking and turns off again, then release the SET push-button.
If the delay function *is not active* the READY/ERROR LED blinks green with 2 quick pulses.
If the delay function *is active* the READY/ERROR LED blinks green with 4 quick pulses.
Press and release immediately the SET push-button in order to change the function status, the new function status is indicated the READY/ERROR LED as the mode before described. The delay function adds 20ms to the duration of the sensor's ON pulse.

SETTING

The supplied sensor is set at the maximum sensitivity, allowing the detection of the minimum luminescence intensity. No other setting procedure is necessary, unless luminescent objects placed on luminescence backgrounds have to be detected.

EASY TOUCH™
The sensor uses the patent-covered EASY TOUCH™ technology that allows a rapid and safe self-setting of the product.
Two different setting possibilities are available:
- *EASY TOUCH™;* a long pressure of the SET push-button allows self-setting.
- *FINE DETECTION;* to be used only in particularly critical conditions, this setting procedure is used only when the EASY TOUCH™ is not sufficient.

S60…U setting
To achieve a correct sensor functioning, the luminescent mark or object to be detected has to be placed at the right reading distance.

- *EASY TOUCH™ (standard detection in the LIGHT mode)*
  The EASY TOUCH™ technology allows the functioning in the LIGHT mode (mark presents a higher luminescence respect to the background). The mark to detect has to be placed correctly at the right reading distance within the sensor spot.
  Press the SET push-button until the READY/ERROR LED turns off.
  Release the SET push-button and wait for the READY/ERROR LED to turn green. The sensor is now ready to detect the pre-set luminescent mark or object (output LED turns on when the N.O. output is closed).
  Note: The automatic EASY TOUCH™ setting has to be performed without any objects inside the sensor reading range (or using a non-luminescent object) in order to bring the sensor back to the maximum sensitivity condition.

  Fine detection (DARK or LIGHT mode)
  This mode offers an improved detection precision and also allows the detection of luminescent marks or objects placed on luminescent backgrounds.
  The operating mode is selected automatically by the sensor: DARK operating mode (mark presents a minor luminescence respect to the background) or LIGHT operating mode (mark presents a higher luminescence respect to the background). Thus the output LED is ON and the N.O. output is closed, when the sensor is positioned on the pre-set luminescent mark. The mark to detect has to be placed correctly at the right reading distance within the sensor spot.
  Press the SET push-button. The READY/ERROR LED turns OFF.
  Keep the SET push-button pressed until the READY/ERROR LED blinks green. Place the background under the sensor spot.
  Press the SET push-button again until the READY/ERROR LED turns OFF. The sensor is now ready to detect, with a very high precision, the pre-set luminescent mark (output LED turns ON, READY/ERROR LED turns green).

REMOTE FUNCTION

The REMOTE wire, if connected to +Vdc, is equal to the pressure of the SET push-button. If the REMOTE wire is connected to +Vdc, when the sensor is powered ON, the *keyboard lock* function is activated; the SET push-button is no longer active. To deactivate the *keyboard lock* function, the sensor has to be turned off and powered again with the REMOTE wire not connected or connected to 0V.

DECLARATION OF CONFORMITY
We DATASENSOR S.p.A. declare under our sole responsibility that these products are conform to the 2004/108/CE, 2006/95/CE Directives and successive amendments.

WARRANTY
DATASENSOR S.p.A. warrants its products to be free from defects.
DATASENSOR S.p.A. will repair or replace, free of charge, any product found to be defective during the warranty period of 36 months from the manufacturing date.
This warranty does not cover damage or liability deriving from the improper application of DATASENSOR products.

DATASENSOR S.p.A. Via Lavino 265
40050 Monte S. Pietro - Bologna - Italy
Tel: +39 051 6765611 Fax: +39 051 6759324
http://www.datasensor.com e-mail: info@datasensor.com

DATASENSOR S.p.A. cares for the environment: 100% recycled paper.
DATASENSOR S.p.A. reserves the right to make modifications and improvements without prior notification.

826001051 Rev.D

S60…W

Contrast sensor

INSTRUCTION MANUAL

CONTROLS

OUTPUT LED
The yellow LED ON indicates that the N.O. (normally open) output status is closed.

READY/ERROR LED (bicolour)
When the bicoloured LED is continuously green, the sensor is operating in a normal condition and it is ready to function correctly (stability condition).
The red and green blinking of the LED indicates a wrong sensor setting. Please refer to the "SETTING" paragraph to get the correct setting procedure.

SET PUSHBUTTON
A long pressure on the pushbutton activates the self-setting procedure.
The REMOTE input allows the external control of the SET pushbutton.

INSTALLATION

The sensor can be positioned by means of the three housing's holes using two screws (M4x25 or longer, 1.5 Nm maximum tightening torque) with washers.
Various orientable fixing brackets to ease the sensor positioning are available (please refer to the accessories listed in the general catalogue).
The operating distance is measured from the front surface of the sensor optics.
The M12 connector can be oriented at two different positions using the specific fastening spring and rotating the block of 180°.

CONNECTIONS

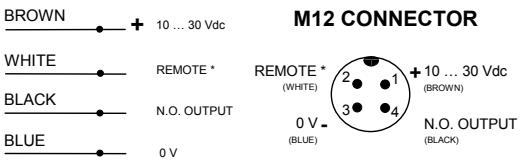

* = Connect the REMOTE wire to 0 V if not used.

NOTE
If a setting error will occur please repeat again the EASY TOUCH™ setting procedure, in order to be sure to restart the setting procedure correctly.

DIMENSIONS

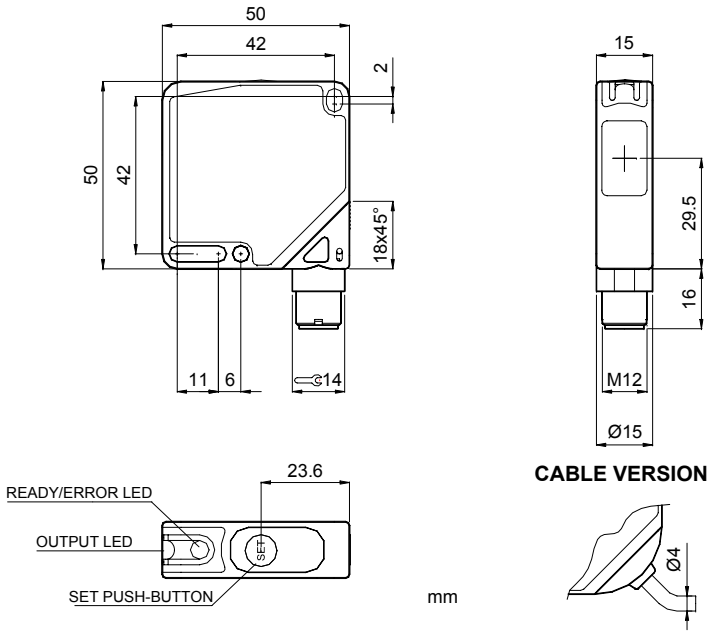

TECHNICAL DATA

Power supply:	10 … 30 Vdc (limit values)
Ripple:	2 Vpp max.
Current consumption (output current excluded):	30 mA max.
Outputs:	PNP or NPN; 30 Vdc max. (short-circuit protection)
Output current:	100 mA
Output saturation voltage:	≤ 2 V
Response time:	100 µs max.
Switching frequency:	5 KHz
Indicators:	OUTPUT LED (YELLOW) / READY/ERROR LED (GREEN/RED)
Setting:	SET pushbutton
Data retention:	non volatile EEPROM memory
Operating temperature:	-10 … 55 °C
Storage temperature:	-20 … 70 °C
Electrical shock protection:	Class 2
Operating distance (typical values):	19 mm ±2 mm
Minimum spot dimension:	3.5 mm at 19 mm
Emission type:	white light LED (400-700nm)
Ambient light rejection:	according to EN 60947-5-2
Vibrations:	0.5 mm amplitude, 10 … 55 Hz frequency, for every axis (EN60068-2-6)
Shock resistance:	11 ms (30 G) 6 shock for every axis (EN60068-2-27)
DARK/LIGHT selection:	DARK mode with EASY TOUCH™ / Automatic with fine detection
Housing:	ABS
Lens:	glass window (sloped); glass lens
Mechanical protection:	IP67
Connections:	2 m cable ∅ 4 mm / M12-4 pole connector
Weight:	90 g. max. cable vers. / 40 g. max. connector vers.

DELAY FUNCTION

Press the SET pushbutton and keep it pressed until the READY/ERROR LED turns off, blinking and turns off again, then release the SET pushbutton.
If the delay function *is not active* the READY/ERROR LED blinks green with 2 quick pulses.
If the delay function *is active* the READY/ERROR LED blinks green with 4 quick pulses.
Press and release immediately the SET pushbutton in order to change the function status, the new function status is indicated the READY/ERROR LED as the mode before described. The delay function adds 20ms to the duration of the sensor's ON pulse.

SETTING

EASY TOUCH™
The sensor uses the patent-covered EASY TOUCH™ technology that allows a rapid and safe self-setting of the product.
Two different setting possibilities are available:
- *EASY TOUCH™;* a long pressure of the SET pushbutton allows self-setting.
- *FINE DETECTION;* to be used only in particularly critical conditions. This setting procedure is used only when the EASY TOUCH™ is not sufficient.

S60…W setting
To achieve a correct sensor functioning, the coloured mark or object to be detected has to be placed at the right reading distance.

- *EASY TOUCH™ (standard detection in the DARK mode)*
  The EASY TOUCH™ technology allows the functioning in the DARK mode (mark presents a lower light intensity respect to the background).
  The mark to detect has to be placed correctly at the right reading distance within the sensor spot.
  Press the SET pushbutton until the READY/ERROR LED turns off.
  Release the SET pushbutton and wait for the READY/ERROR LED to turn green.
  The sensor is now ready to detect the pre-set coloured mark or object (output LED turns on when the N.O. output is closed).
- *Fine detection (DARK or LIGHT mode)*
  This mode offers an improved detection precision. The sensor can function either in the DARK operating or in the LIGHT operating mode (light-coloured mark on dark background).
  The operating mode is selected automatically by the sensor.
  The mark to detect has to be placed correctly at the right reading distance within the sensor spot.
  Press the SET pushbutton. The READY/ERROR LED turns off. Keep the SET pushbutton pressed until the READY/ERROR LED blinks green. Place the background under the sensor spot.
  Press the SET pushbutton again until the READY/ERROR LED turns off.
  The sensor is now ready to detect, with a very high precision, the pre-set coloured mark (output LED turns on, READY/ERROR LED turns green).
  The output LED is ON and the N.O. output is closed, when the sensor is positioned on the pre-set coloured mark.

REMOTE FUNCTION

The REMOTE wire, if connected to +Vdc, is equal to the pressure of the SET button. If the REMOTE wire is connected to +Vdc, when the sensor is powered ON, the *keyboard lock* function is activated; the SET button is no longer active. To deactivate the *keyboard lock* function, the sensor has to be turned off and powered again with the REMOTE wire not connected or connected to 0V.

DECLARATION OF CONFORMITY
We DATASENSOR S.p.A. declare under our sole responsibility that these products are conform to the 2004/108/CE, 2006/95/CE Directives and successive amendments.

WARRANTY
DATASENSOR S.p.A. warrants its products to be free from defects.
DATASENSOR S.p.A. will repair or replace, free of charge, any product found to be defective during the warranty period of 36 months from the manufacturing date.
This warranty does not cover damage or liability deriving from the improper application of DATASENSOR products.

DATASENSOR S.p.A. Via Lavino 265
40050 Monte S. Pietro - Bologna - Italy
Tel: +39 051 6765611 Fax: +39 051 6759324
http://www.datasensor.com e-mail: info@datasensor.com

DATASENSOR S.p.A. cares for the environment: 100% recycled paper.
DATASENSOR S.p.A. reserves the right to make modifications and improvements without prior notification.

826001062 Rev.F

S60…Y

Distance sensor

INSTRUCTION MANUAL

CONTROLS

OUTPUT LED
The yellow LED on indicates that the NO output status is closed.

READY/ERROR LED (bicolour)
The bicoloured LED permanently green indicates a normal operating condition and hence the sensor is ready to function correctly (stability condition).
The alternative green/red blinking of the LED signals a wrong detection.

SET PUSHBUTTON
A long pressure on the pushbutton activates the self-setting procedure.
The REMOTE input allows the external SET control.

INSTALLATION

The sensor can be positioned by means of the three housing's holes using two screws (M4x25 or longer, 1.5Nm maximum tightening torque) with washers.
Various orientable fixing brackets to ease the sensor positioning are available (please refer to the accessories listed in the catalogue).
The operating distance is measured from the front surface of the sensor optics.
The M12 connector can be oriented at two different positions using the specific fastening spring and rotating the block of 180°.

CONNECTIONS

BROWN	+	18 … 30 Vdc
WHITE		ANALOG OUTPUT
BLACK		SWITCHING OUTPUT
BLUE		0 V

M12 CONNECTOR

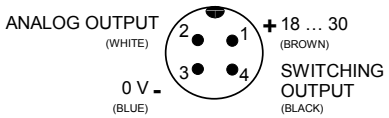

TECHNICAL DATA

Power supply:	18 … 30 Vdc (limit values)
Ripple:	2 Vpp max.
Consumption:	60 mA max. (output current excluded):
Switching outputs:	PNP or NPN; 30 Vdc max. (short-circuit protection)
Switching output current:	100 mA max.
Switching output saturation voltage:	≤ 2 V
Analog output:	in tensione 0…10 V
Analog output current:	10mA max. (1KΩ minimum resistance load)
Analog output proportionality:	inverse with EASY TOUCH™ / programmable with 2 step detection
Resolution:	1 mm max
Temperature Drift:	0,35 mm/C° (from -10 C° to 55 C°)
Linearity:	± 2.5 mm
Response time:	1 msec. max.
Switching frequency:	500 Hz
Indicators:	OUTPUT LED (YELLOW) / READY/ERROR LED (GREEN/RED)
Setting:	SET pushbutton
Data retention:	non volatile EEPROM memory
Operating temperature:	-10 … 55 °C
Storage temperature:	-20 … 70 °C
Electrical protection:	Class 2 (TYPE 1 ENCLOSURE)
Operating distance (typical values):	50…150 mm
Minimum spot dimension:	16…20 mm
Emission type:	red (670 nm)
Ambient light rejection:	according to EN 60947-5-2
Vibrations:	0.5 mm amplitude, 10 … 55 Hz frequency, for every axis (EN60068-2-6)
Short resistance:	11 ms (30 G) 6 shock for every axis (EN60068-2-27)
DARK/LIGHT selection:	LIGHT mode with *EASYtouch*™ / automatic with two steps acquisition
Housing material:	ABS
Lens material:	PMMA
Mechanical protection:	IP67
Connections:	2 m ∅ 4 mm cable / M12 4-pole connector
Weight:	90 g. max. cable vers. / 40 g. max. connector vers.

SETTING

EASYTOUCH™
The sensor uses the patent-covered EASY TOUCH™ technology that allows a rapid and safe self-setting of the product.
Two different setting possibilities are available:
- *EASYtouch ™;* a long pressure of the SET pushbutton allows self-setting.
- *2 step detection*, for the DARK/LIGHT selection of digital output and analog output proportionality.

Setting
- *EASYtouch ™ (switching output setting)*
  Place the backgroud inside the operating distance.
  Press the SET pushbutton until the READY/ERROR LED turns off.
  Release the SET pushbutton and wait for the READY/ERROR LED turns green.
  The sensor is now ready to detect all objects in the set range in the LIGHT operating output mode.
  The analogue output is set in an inverse proportionality with field ranging from 50 to 150 mm.

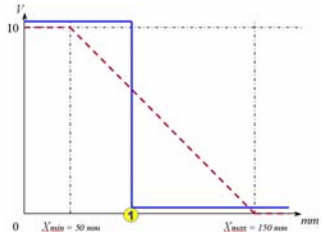

- *2 STEP DETECTION*
  Output in the DARK switching mode, analog output in direct proportionality:
  - *Step 1*: place the target at the operating distance 1 furthest to the sensor. Press the SET pushbutton and keep it pressed until the READY/ERROR LED turns off and then begins to blink green.
  - *Step 2*: place the target at the operating distance 2 nearest from the sensor. Press for a second time, the SET pushbutton until the READY/ERROR LED turns off.

  Release the SET pushbutton and wait for the READY/ERROR LED turns green.
  The switching threshold is set by the nearest point of the detection range fron 50 to 150mm.

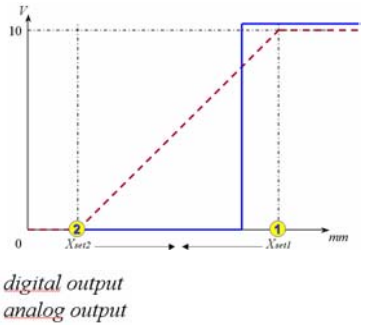

Output in the LIGHT switching mode, analog output in inverse proportionality:
- *Step 1*: place the target at the operating distance 1 nearest to the sensor. Press the SET pushbutton and keep it pressed until the READY/ERROR LED turns off and then begins to blink green.
- *Step 2*: place the target at the operating distance 2 furthest from the sensor. Press for a second time, the SET pushbutton until the READY/ERROR LED turns off.

Release the SET pushbutton and wait for the READY/ERROR LED turns green.
The switching threshold is set by the nearest point of the detection range from 50 to 150mm.

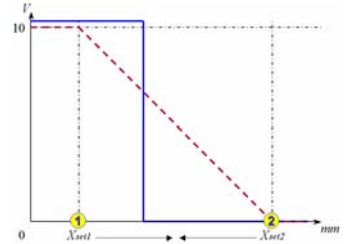

DIMENSIONS

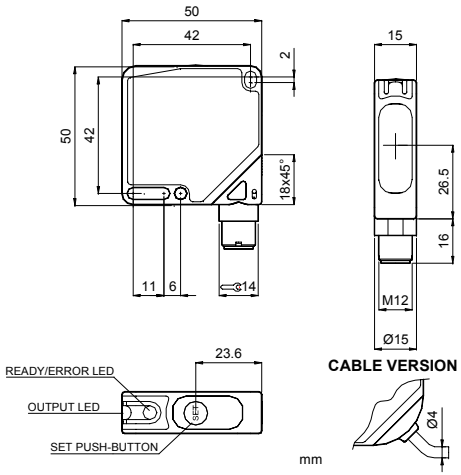

DECLARATION OF CONFORMITY
We DATASENSOR S.p.A. declare under our sole responsibility that these products are conform to the 2004/108 CEE, 73/23 CEE Directives and successive amendments.

WARRANTY
DATASENSOR S.p.A. warrants its products to be free from defects.
DATASENSOR S.p.A. will repair or replace, free of charge, any product found to be defective during the warranty period of 36 months from the manufacturing date.
This warranty does not cover damage or liability deriving from the improper application of DATASENSOR products.

DATASENSOR S.p.A. Via Lavino 265
40050 Monte S. Pietro - Bologna - Italy
Tel: +39 051 6765611 Fax: +39 051 6759324
http://www.datasensor.com e-mail: info@datasensor.com

DATASENSOR S.p.A. cares for the environment: 100% recycled paper.
DATASENSOR S.p.A. reserves the right to make modifications and improvements without prior notification.

826001591 Rev.B