REFERENCE MANUAL

> DS1500

DATALOGIC

Datalogic S.r.l.
Via S. Vitalino 13
40012 Calderara di Reno
Bologna - Italy

DS1500 Reference Manual

Ed.: 07/2017

© 2006 – 2017 Datalogic S.p.A. and/or its affiliates ◆ ALL RIGHTS RESERVED. ◆ Without limiting the rights under copyright, no part of this documentation may be reproduced, stored in or introduced into a retrieval system, or transmitted in any form or by any means, or for any purpose, without the express written permission of Datalogic S.p.A. and/or its affiliates.

Datalogic and the Datalogic logo are registered trademarks of Datalogic S.p.A. in many countries, including the U.S.A. and the E.U.

All other trademarks and brands are property of their respective owners.

Datalogic shall not be liable for technical or editorial errors or omissions contained herein, nor for incidental or consequential damages resulting from the use of this material.

821001306 (Rev. F)

CONTENTS

REFERENCES v
Conventions v
Reference Documentation v
Support Through The Website v
Patents v

SAFETY REGULATIONS vi
Laser Safety vi
Power Supply vii
EAC Compliance vii
CE Compliance viii
FCC Compliance viii
Bureau of Indian Standard (BIS) viii

GENERAL VIEW ix

GUIDE TO INSTALLATION x

1 INTRODUCTION 1
1.1 Product Description 1
1.2 Applications 2
1.3 Model Description 2
1.4 Indicators 3
1.5 Test Key Functioning 4
1.5.1 Restoring Dual RS232 Interface 4
1.5.2 Activating Test Operating Mode 5
1.6 Accessories 6

2 INSTALLATION 7
2.1 Package Contents 7
2.2 Mechanical Installation 8
2.2.1 Mounting DS1500 10
2.3 Electrical Connections 11
2.3.1 Power Supply 12
2.3.2 Main Serial Interface 12
2.3.3 Auxiliary RS232 Interface 18
2.3.4 Inputs 19
2.3.5 Outputs 20
2.4 User Interface 21
2.5 Positioning 22
2.6 Typical Layouts 24
2.6.1 Point-to-Point 24
2.6.2 Pass-Through 26

2.6.3 RS232 Master/Slave 27
2.6.4 Multiplexer Layout 28

3 READING FEATURES 29
3.1 Advanced Code Builder (ACB) 29
3.1.1 Important ACB Reading Conditions 30
3.1.2 Tilt Angle Improvement with ACB 31
3.2 Linear Code Reading 31
3.2.1 Step-Ladder Mode 32
3.2.2 Picket-Fence Mode 33
3.3 Performance 34
3.4 Reading Diagrams 35

4 MAINTENANCE 37
4.1 Cleaning 37

5 TROUBLESHOOTING 38
5.1 General Guidelines 38

6 TECHNICAL FEATURES 41

A DEFAULT CONFIGURATION 43

GLOSSARY 48

INDEX 52

REFERENCES

CONVENTIONS

This manual uses the following conventions:

“User” or “Operator” refers to anyone using a DS1500.
“Device” refers to the DS1500.
“You” refers to the System Administrator or Technical Support person using this manual to install, mount, operate, maintain or troubleshoot a DS1500.

REFERENCE DOCUMENTATION

The documentation related to the DS1500 management is listed below:

- WinHost Help On Line

SUPPORT THROUGH THE WEBSITE

Datalogic provides several services as well as technical support through its website. Log on to **www.datalogic.com** and click on the **SUPPORT** > **Unattended Scanning Systems** category link. From this page you can select your product model from the dropdown list which gives you access to:

- Downloads including Data Sheets, Manuals, Software & Utilities, and Drawings;
- Repair Program for On-Line Return Material Authorizations (RMAs) plus Repair Center contact information;
- Service Program containing details about Maintenance Agreements;
- Technical Support through email or phone.

PATENTS

See www.patents.datalogic.com for patent list.

This product is covered by one or more of the following patents:

Utility patents: EP0789315B1, EP1207489B1, EP1760630B1, EP2093694B1, JP4339926B2, JP4598796B2, US5992740, US7131590, US7533822, US7823786, US7956340.

SAFETY REGULATIONS

LASER SAFETY

The following information is provided to comply with the rules imposed by international authorities and refers to the correct use of the DS1500 scanner.

Standard Regulations

This scanner utilizes a low-power laser diode. Although staring directly at the laser beam momentarily causes no known biological damage, avoid staring at the beam as one would with any very strong light source, such as the sun. Avoid that the laser beam hits the eye of an observer, even through reflective surfaces such as mirrors, etc.

This product conforms to the applicable requirements of IEC 60825-1 and complies with 21 CFR 1040.10 except for deviations pursuant to Laser Notice N° 50, date June 24, 2007. The scanner is classified as a Class 2 laser product according to IEC 60825-1 regulations.

There is a safety device, which allows the laser to be switched on only if the motor is rotating above the threshold for its correct scanning speed.

The laser beam can be switched off through a software command (see also the WinHost Help On Line).

WARNING

Use of controls or adjustments or performance of procedures other than those specified herein may result in exposure to hazardous visible laser light.

The laser light is visible to the human eye and is emitted from the window on the front of the scanner (Figure A, 8).

Warning labels indicating exposure to laser light and the device classification are applied onto the body of the scanner (Figure A, 6).

Warning and Device Class Label

For installation, use and maintenance it is not necessary to open the scanner.

The laser diode used in this device is classified as a class 3B laser product according to EN 60825-1 regulations and as a Class IIIb laser product according to CDRH regulations.

Any violation of the optic parts in particular can cause radiation up to the maximum level of the laser diode (35 mW at 630 to 680 nm).

POWER SUPPLY

This device is intended to be supplied by a UL Listed or CSA Certified Power Unit with «Class 2» or LPS power source, which supplies power directly to the scanner via the 15-pin connector.

EAC COMPLIANCE

Customs Union:
The CU Conformity certification has been achieved; this allows the Product to bear the Eurasian mark of conformity.

CE COMPLIANCE

CE marking states the compliance of the product with essential requirements listed in the applicable European directive. Since the directives and applicable standards are subject to continuous updates, and since Datalogic promptly adopts these updates, therefore the EU declaration of conformity is a living document. The EU declaration of conformity is available for competent authorities and customers through Datalogic commercial reference contacts. Since April 20th, 2016 the main European directives applicable to Datalogic products require inclusion of an adequate analysis and assessment of the risk(s). This evaluation was carried out in relation to the applicable points of the standards listed in the Declaration of Conformity. Datalogic products are mainly designed for integration purposes into more complex systems. For this reason it is under the responsibility of the system integrator to do a new risk assessment regarding the final installation.

Warning: This is a Class A product. In a domestic environment this product may cause radio interference in which case the user may be required to take adequate measures.

FCC COMPLIANCE

Modifications or changes to this equipment without the expressed written approval of Datalogic could void the authority to use the equipment.

This device complies with PART 15 of the FCC Rules. Operation is subject to the following two conditions: (1) This device may not cause harmful interference, and (2) this device must accept any interference received, including interference which may cause undesired operation.

This equipment has been tested and found to comply with the limits for a Class A digital device, pursuant to part 15 of the FCC Rules. These limits are designed to provide reasonable protection against harmful interference when the equipment is operated in a commercial environment. This equipment generates, uses, and can radiate radio frequency energy and, if not installed and used in accordance with the instruction manual, may cause harmful interference to radio communications. Operation of this equipment in a residential area is likely to cause harmful interference in which case the user will be required to correct the interference at his own expense.

BUREAU OF INDIAN STANDARD (BIS)

Self Declaration – Conforming to IS 13252 (Part 1):2010, R-41009288.

GENERAL VIEW

DS1500

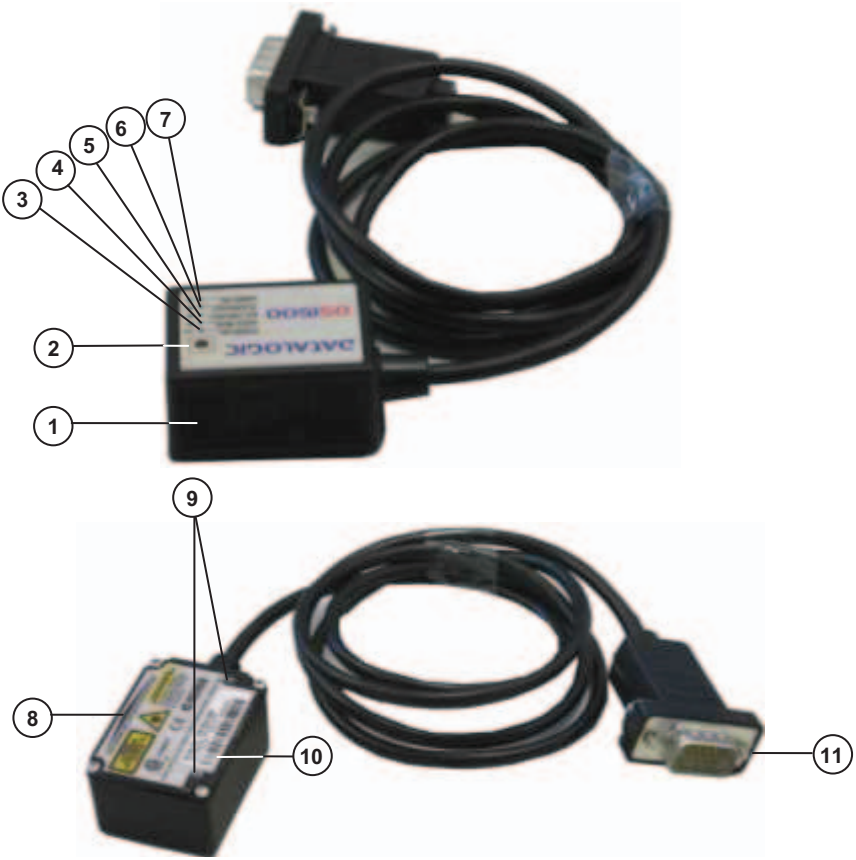

Figure A

1. Laser Beam Output Window
2. Test Key
3. Power On LED
4. Good Read LED
5. External Trigger/Ready LED
6. Tx Data/Active LED
7. Laser On LED
8. Warning and Device Class Label
9. Mounting Holes
10. Product Label
11. 15-pin D-sub High-density Male Connector

GUIDE TO INSTALLATION

The following can be used as a checklist to verify all of the steps necessary for complete installation of the DS1500 scanner.

1) Read all information in the section "Safety Precautions" at the beginning of this manual.

2) Correctly mount the reader using the bracket provided according to the information in par.2.2.1.

3) Position the reader at the correct reading distance according to your model as shown in paragraphs 2.5 and 3.4.

4) Make electrical connections to your DS1500 scanner by either:

   a) Connecting the test cable to the DS1500 scanner as described in par.2.4.

   b) Providing correct and complete system cabling according to the signals necessary for the layout of your application.
      - Layout: Point-to-point, Pass-Through, RS232 Master/Slave, Multiplexer. See sub-paragraphs under 2.6 for reference.
      - Cabling: Power, Main Serial Interface, Auxiliary Interface (RS232), Inputs, Outputs, etc. For further details, see all sub-paragraphs under 2.3.

5) Configure the DS1500 scanner by installing and running the WinHost configuration program from the CD-ROM (part number **93ACC1771**). The main steps are:

   1 Select the codes to be read

   2 Set-up the communication parameters

   3 Define data formatting parameters

   4 Fine tune your DS1500 scanner using the Test Mode as described in WinHost.

   Specific parameter details are available in the Help On Line. See also the Guide To Rapid Configuration link.

6) Exit the configuration program and run your application.

The installation is now complete.

1 INTRODUCTION

1.1 PRODUCT DESCRIPTION

The new DS1500 industrial laser scanner is the combination of extremely compact dimension and powerful high-speed reading capabilities, which makes the scanner ideal for OEM integration projects.

DS1500 miniaturization allows an easy OEM integration in pieces of equipment and automatic machinery. Concurrently, the high scan rate and code reconstruction software effectively address demanding applications.
The availability of ACB™ (Advanced Code Builder) embedded reconstruction software algorithm allows effective decoding of damaged or normally unreadable codes due to a high tilt angle.

DS1500 installation and configuration is easy and simple thanks to the compact size and to the new test operating mode with bar graph. Test Mode is activated by means of a key on the scanner (no external PC is required), and the bar graph shows real time scan rate, which is of great help for installation and reading performance monitoring purposes.

DS1500 operates at a speed up to 1200scan/s. Furthermore, the scanner motor can be switched ON and OFF via software command while keeping the unit powered. This allows a prompt restore of full operation and drastically increases the product life.

DS1500 is equipped with a software selectable serial link (RS232 or RS485) thus minimizing the number of models needed to fit all possible applications.

The main DS1500 features are:

- Extremely compact dimensions and light weight
- High scan rate software programmable (up to 1200 scan/s)
- ACB (Advanced Code Builder) code reconstruction software embedded
- Ease of use thanks to Test Mode with reading performance bar graph
- Reads all popular barcode symbologies
- 5 operating modes available to suit most common application requirements
- Code verifier option embedded
- Completely configurable via serial interface (WinHost™ configuration SW)
- Serial communication interfaces software selectable (RS232, RS485)
- Low power consumption

1.2 APPLICATIONS

DS1500 target applications are primarily OEM integration in application characterized by space constraints, demanding reading performance, ruined or low quality barcodes, chemical and biomedical analysis machines, ATL (Automated Tape Library), packaging machines.

1.3 MODEL DESCRIPTION

The following scheme illustrates the model description of the DS1500 scanner:

DS1500 - X X 0 0

Optical Resolution
1 = Standard Resolution
2 = High Resolution

Communication Interface
1 = RS232/RS485main + RS232 aux

The following tables display the scanner reading performance.

Version	Max Code Resolution	Speed
	mm (mils)	scans/s
1100	0.15 (6)	800
1100	0.20 (8)	1200
2100	0.10 (4)	800

Version	Reading Distance
1100	40 mm (1.6 in) - 240 mm (9.4 in) on 0.50mm (20 mils) codes
2100	50 mm (2 in) - 125 mm (4.9 in) on 0.20mm (8 mils) codes

See reading diagrams in par. 3.4 for further details.

1.4 INDICATORS

The five LEDs indicate the following:

LED	Standard Mode	Test Mode	Restore Double RS232
POWER ON (green) (Figure A, 3)	Indicates the reader is connected to the power supply.		
GOOD READ (green) (Figure A, 4)	Indicates the possibility of a successful barcode reading.		
EXT TRIG/RDY (yellow) (Figure A, 5)	Indicates external trigger activity. Refer to par. 2.3.4.	Refer to par. 1.5.2.	
TX DATA/ACT (red) (Figure A, 6)	When blinking, it indicates data transmission.	Refer to par. 1.5.2.	Refer to par. 1.5.1.
LASER ON (red) (Figure A, 7)	Indicates laser ON state.		

1.5 TEST KEY FUNCTIONING

DS1500 provides an external key, which can be used for the following:

- Restoring dual RS232 interface at power on
- Activating Test Mode from the current operating mode

1.5.1 Restoring Dual RS232 Interface

To launch the Restoring Dual RS232 Interface function, proceed as follows:

1. Press the Test key before powering the scanner on;
2. Power ON the scanner while keeping the Test key pressed;
3. When the TX Data/ACT LED switches on, the function is activated;
4. When the TX Data/ACT LED switches off, the restore default of the RS232 interface is achieved;
5. The Test key can be released.

If the Test key is released before the TX Data/ACT LED is off, the Restoring Dual RS232 is not executed.

To restart the procedure, it is first necessary to switch off the DS1500 scanner.

NOTE

The Restore Dual RS232 is not permanently saved.

1.5.2 Activating Test Operating Mode

To launch the Test Mode by the external key, proceed as follows:

1. From any operating mode, press the Test key: the TX Data/ACT LED turns on.
2. Keep the Test key pressed for minimum one second while the Ext Trig/RDY LED turns on. Both LEDs hold this status if the key is not released.
3. Release the Test key. Both LEDs turn off, the Test Mode starts and the Bar Graph is active.

If the Test key is released before Ext Trig/RDY LED turns on, the test mode is not executed. The device holds the previous operating mode.

During the Test Mode, the Bar Graph repeatedly indicates the Good Read Rate (GRR) every 100 scans (about 1 second). At the end of each sampling all the LEDs turn OFF.

The test mode data are transmitted on the serial interfaces according to the current configuration.

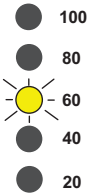

This LED blinks when GRR = < 20%

To exit the Test Mode, repeat the above procedure: when the TX Data/ACT and the Ext Trig/RDY LEDs turn off the Test Mode has been disabled.

The previous operating mode will be restored.

NOTE

If the scanner has been configured in Test Mode via software, a first Test key press will produce no effect. A second Test key press will exit the Test Mode and enable the Default On Line mode.

NOTE

The Test Mode is not permanently saved.

NOTE

You must not be in Test Mode activated by Test Key when configuring DS1500 parameters.

1.6 ACCESSORIES

The following accessories are available on request for the DS1500:

Name	Description	Part Number
CONFIG / DOC PKG	DS1500 Configuration SW, Reference Manual, Test Chart, other documentation	93ACC1771

2 INSTALLATION

2.1 PACKAGE CONTENTS

Verify that the DS1500 reader and all the parts supplied with the equipment are present and intact when opening the packaging; the list of parts includes:

- DS1500 reader with cable
- DS1500 Quick Guide
- Mounting kit: - bracket
  - screws

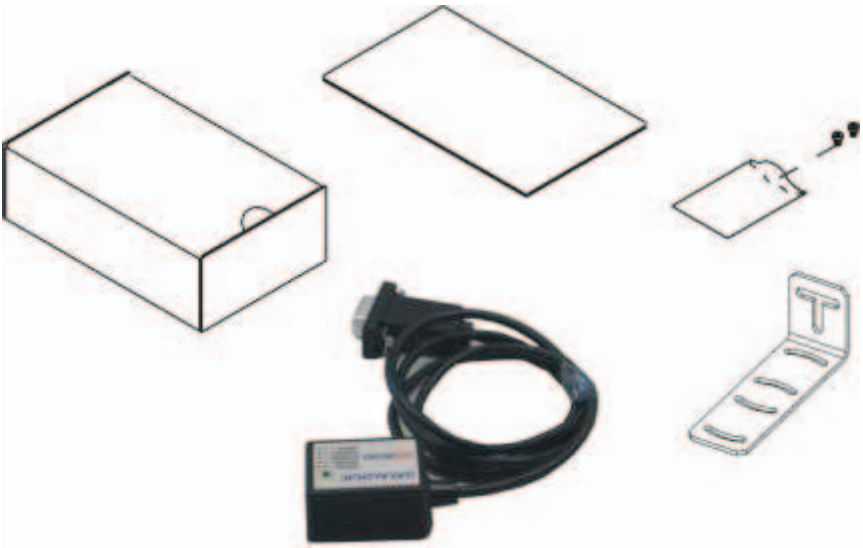

Figure 1 - DS1500 Package Contents

2.2 MECHANICAL INSTALLATION

DS1500 can be installed to operate in different positions. The two screw holes (M2 x 4) on the body of the reader are for mechanical fixture (Figure A, 1). The diagrams below give the overall dimensions of the scanner and mounting bracket and may be used for installation.
Refer to par. 2.5 and 3.4 for correct positioning.

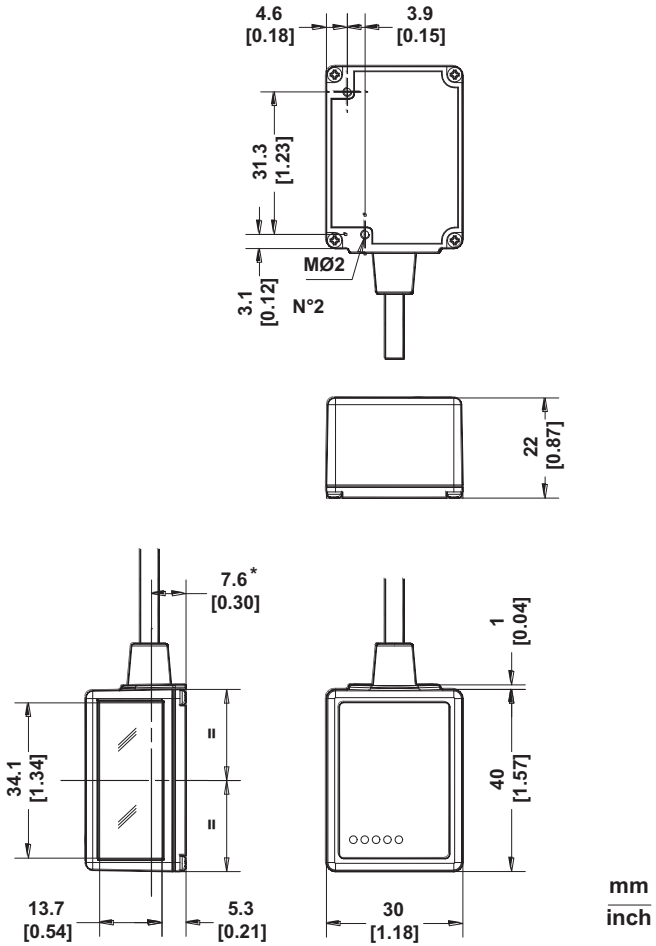

* The quote refers to the scan line.

Figure 2 – DS1500 Overall Dimensions

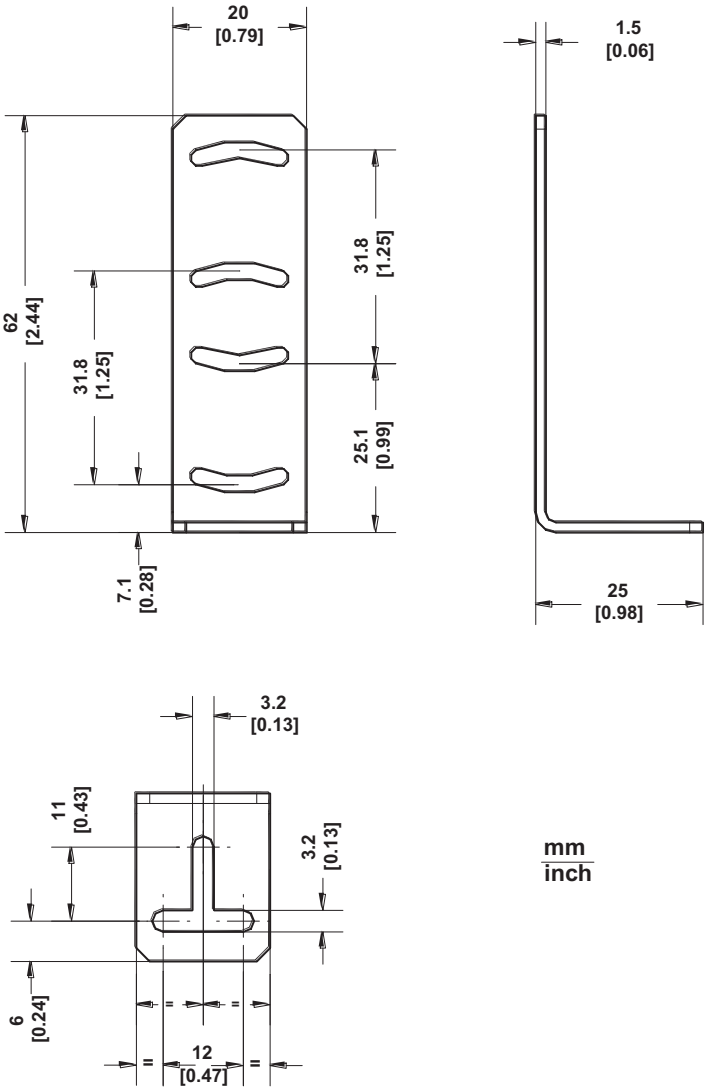

Figure 3 – Mounting Bracket Overall Dimensions

2.2.1 Mounting DS1500

Using the DS1500 mounting bracket you can obtain the most suitable position for the reader as shown in the figure below:

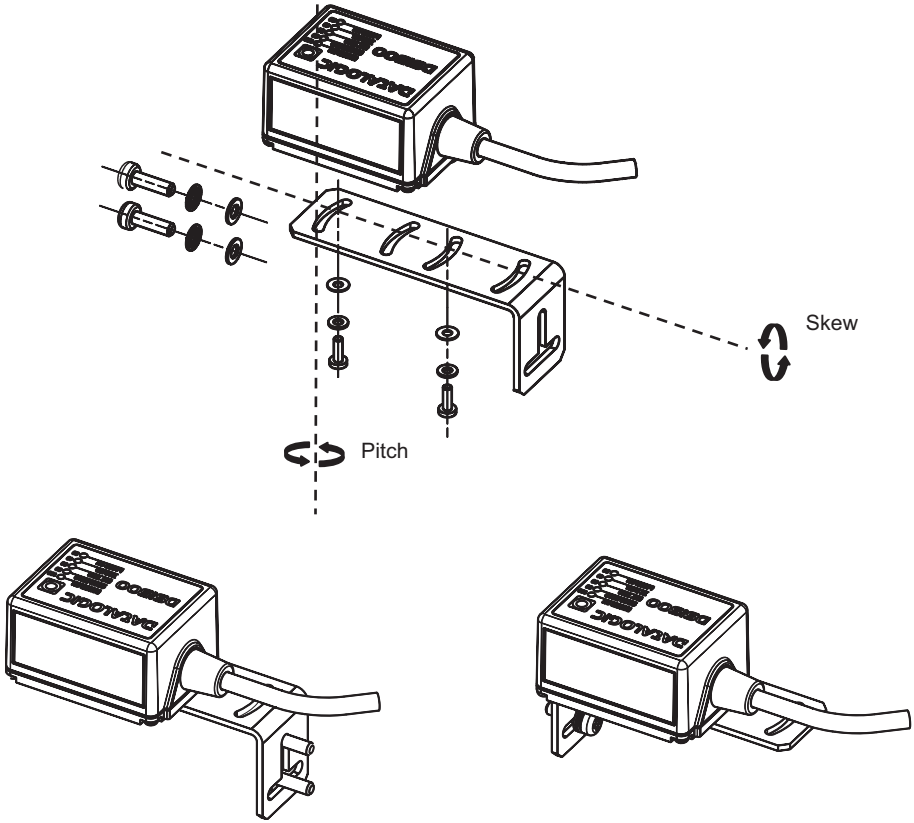

Figure 4 – Positioning with Mounting Bracket

2.3 ELECTRICAL CONNECTIONS

All DS1500 models are equipped with a cable terminated by a 15-pin male D-sub high-density connector for connection to the power supply and input/output signals. The details of the connector pins are indicated in the following table.

CAUTION

Do not connect GND and SGND to different (external) ground references. GND and SGND are internally connected through filtering circuitry which can be permanently damaged if subjected to voltage drops over 0.8 Vdc.

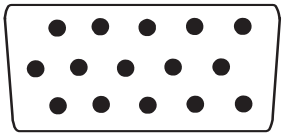

Figure 5 - 15-pin D-sub High-Density Male Connector

15-pin D-sub HD male connector pinout				
Pin	**Name**	**Function**		
1	VS	Power supply input voltage +		
5	GND	Power supply input voltage -		
8	PE	Protective Earth Ground		
13	SHIELD	Cable Shield		
9	EXT TRIG-	External Trigger -		
7	OUT1 +	Output 1 +		
14	OUT2 +	Output 2 +		
11, 12, 15	NC	Not Connected		
Pin		**RS232**	**RS485 Full-Duplex**	**RS485 Half-Duplex**
2	Serial interface signals, see par. 2.3.2.	TX232 Main	TX485-	RTX485-
3		RX232 Main	* RX485+	
6		TXAUX	TX485+	RTX485+
10		RXAUX	* RX485-	
4		SGND	SGND	SGND

* Do not leave floating, see par. RS485 Full-Duplex Interface for connection details.

2.3.1 Power Supply

Power can be supplied to the scanner through the pins provided on the 15-pin connector used for communication with the host (Figure 6):

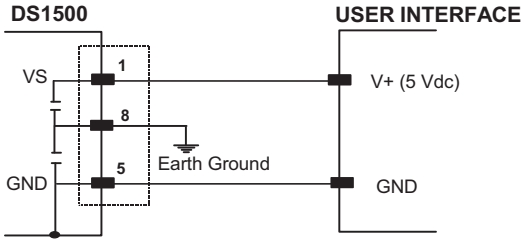

Figure 6 - Power Supply Connections

The power must be 5 Vdc only.

It is recommended to connect pin 8 (Protective Earth Ground) to a common earth ground.

NOTE

GND is internally connected to the chassis.

2.3.2 Main Serial Interface

The signals relative to the following serial interface types are available on the input/output connector of DS1500.

If the interface type is not compatible with the current communication handshaking, then the system forces the handshake to **none**.

The main interface type and the relative parameters (baud rate, data bits, etc.) can be set using the WinHost utility program or "Host Mode Programming" procedure through ESC sequences.

Details regarding the connections and use of the interfaces are given in the next paragraphs.

RS232 Interface

The serial interface is used in this case for point-to-point connections; it handles communication with the host computer and allows both transmission of code data and the programming of the scanner. This is the default setting.

The following pins are used for RS232 interface connection:

Pin	Name	Function
2	TX232	transmit data
3	RX232	receive data
4	SGND	signal ground

It is always advisable to use shielded cables. The overall maximum cable length must be less than 15 m (49.2 ft).

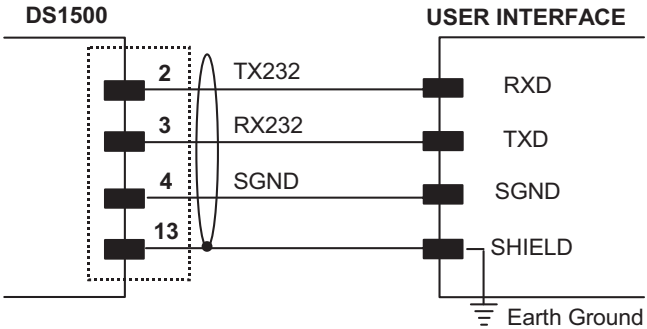

Figure 7 – RS232 Main Interface Connections

NOTE

The pin 13 of the SHIELD line is not internally connected to the chassis.

RS485 Full-Duplex Interface

The RS485 full-duplex (5 wires + shield) interface is used for non-polled communication protocols in point-to-point connections over longer distances (max 1200 m / 3940 ft) than those acceptable for RS232 communications or in electrically noisy environments.

The connector pinout follows:

Pin	Name	Function
6	TX485+	RS485 transmit data +
2	TX485-	RS485 transmit data -
3	RX485+	RS485 receive data +
10	RX485-	RS485 receive data -
4	SGND	signal ground

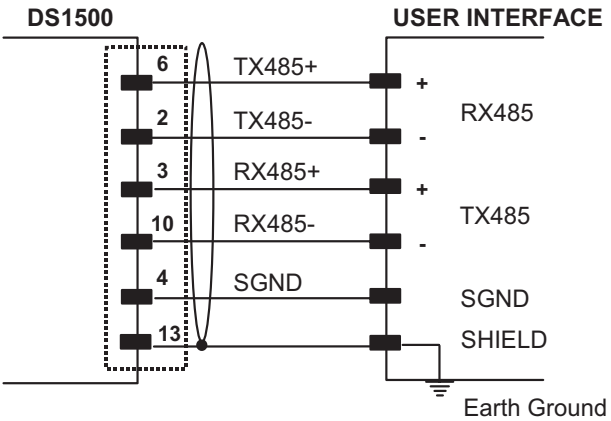

Figure 8 - RS485 Full-duplex Connections

NOTE

For applications that do not use RX signals, do not leave these lines floating but connect them to SGND as shown below.

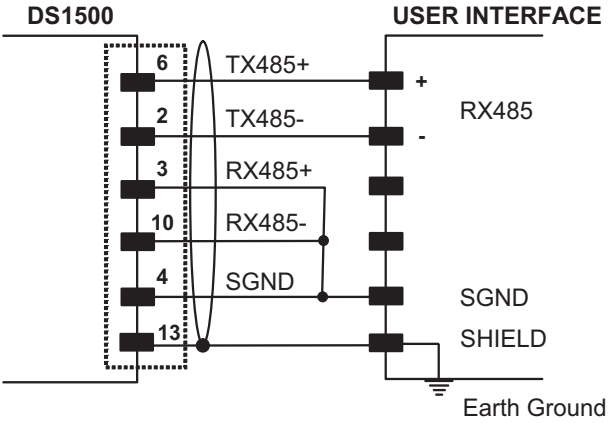

Figure 9 - RS485 Full-duplex Connections Using Only TX Signals

RS485 Half-Duplex Interface

The RS485 half-duplex (3 wires + shield) interface is used for polled communication protocols.

It can be used for Multidrop connections with a Datalogic Multiplexer, (see par. 2.6.3 and 2.6.4) exploiting a proprietary protocol based on polled mode called MUX32 protocol, where a master device polls slave devices to collect data.

The connector pinout follows:

Pin	Name	Function
6	RTX485+	RS485 transmit/receive data +
2	RTX485-	RS485 transmit/receive data -
4	SGND	signal ground

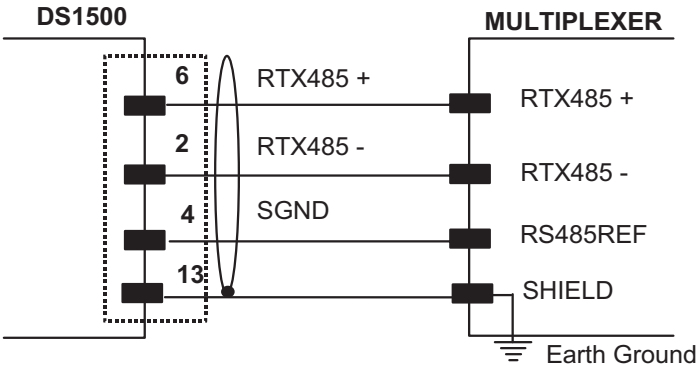

Figure 10 - RS485 Half-duplex Connections

This interface is forced by software when the protocol selected is MUX32 protocol.

In a Multiplexer layout or for slaves, the Multidrop address must also be set via the serial channel by the WinHost utility or by ESC sequences.

Figure 11 shows a multidrop configuration with DS1500 scanners connected to a Multiplexer.

CAUTION

To avoid any possible Ground loop, keep the chassis isolated from the Ground.

CAUTION

This is an example of multidrop wiring. Consult the multiplexer manual for complete wiring instructions.

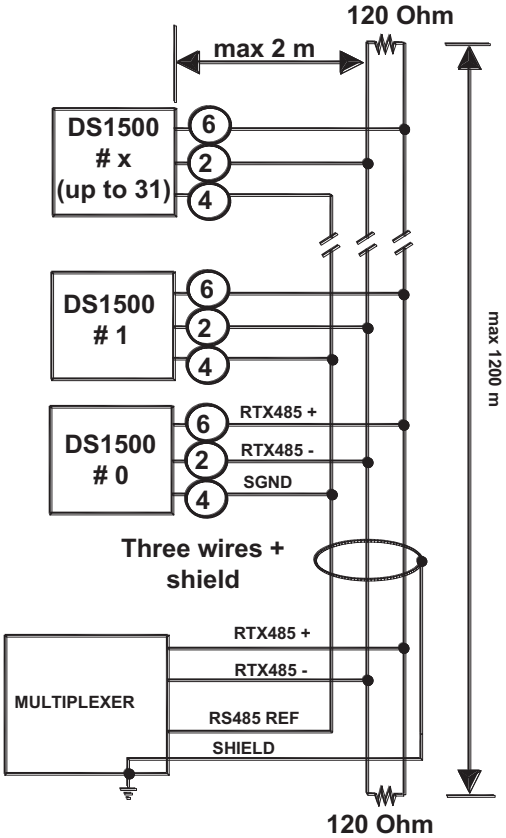

Figure 11 - DS1500 Multidrop Connection to a Multiplexer

2.3.3 Auxiliary RS232 Interface

The auxiliary serial interface is used exclusively for RS232 point-to-point connections.

The parameters relative to the aux interface (baud rate, data bits, etc.) as well as particular communication modes such as LOCAL ECHO can be defined using the WinHost utility program or "Host Mode Programming".

The following pins of the 15-pin connector are used to connect the RS232 auxiliary interface:

Pin	Name	Function
10	RXAUX	Receive data
6	TXAUX	Transmit data
4	SGND	Signal ground

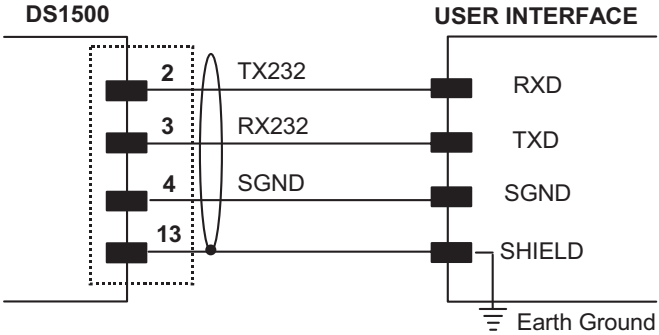

Figure 12 - RS232 Auxiliary Interface Connections

NOTE

The Auxiliary RS232 interface is only available when the main interface is RS232.

Code Verifier

If the DS1500 is used as a Code Verifier, it is possible to indicate to the scanner what code to store as the verifier code through the WinHost program, (refer to the WinHost Help On Line).

2.3.4 Inputs

The input available on the connector supplied with the scanner is the pin relative to the External Trigger, as indicated below:

Pin	Name	Function
9	EXT TRIG-	external trigger -
5	GND	

The External Trigger input is used in the On-Line operating Mode and tells the scanner to scan for a code. The active state of this input is selected in software. Refer to the WinHost Help On Line.

The yellow LED (Figure A, 5) is on when the External Trigger forces a current flow through the EXT TRIG- and GND pins.

This input is designed to be driven by an NPN type command. The connections are indicated in the following diagrams.

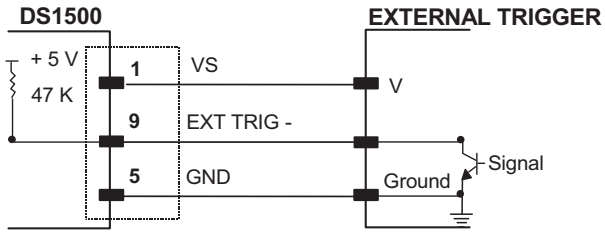

Figure 13 - External Trigger Input Command using Scanner Power

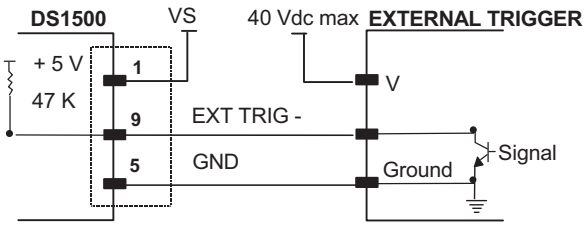

Figure 14 - External Trigger Input Command using External Power

An anti-disturbance hardware filter is implemented on the External Trigger input (< 5 milliseconds delay).

An additional 15 ms (typical) delay can be implemented through a dedicated software parameter (refer to WinHost Help On Line).

2.3.5 Outputs

Two general purpose outputs are available. These outputs can only be connected as open collector configurations. The following pins are present on the 15-pin connector of the scanner:

Pin	Name	Function
7	OUT1+	output 1 +
14	OUT2+	output 2 +
5	GND	output reference

The meaning of the two outputs OUT1 and OUT2 can be defined by the user (No Read, Right, Wrong, or a combination). Refer to the WinHost Help On Line.

By default, OUT1 is associated with the No Read event, which activates when the code signaled by the external trigger is not decoded, and OUT2 is associated with the Right event, which activates when the code is correctly decoded.

These outputs are both level and pulse configurable.

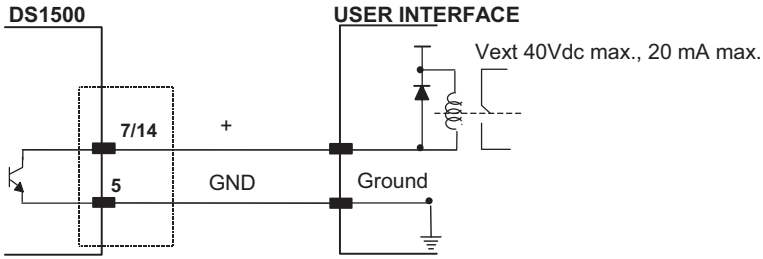

Figure 15 - DS1500 Output Connections

V_{CE} max = 40 Vdc
I max = 20 mA continuous

2.4 USER INTERFACE

The following table contains the pinout for standard RS232 PC Host interface. For other user interface types please refer to their own manual.

RS232 PC-side connections			
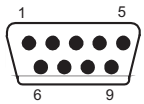 9-pin male connector		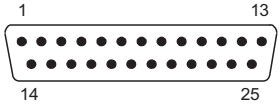 25-pin male connector	
Pin	**Name**	**Pin**	**Name**
2	RX	3	RX
3	TX	2	TX
5	GND	7	GND
7	RTS	4	RTS
8	CTS	5	CTS

How To Build A Simple Interface Test Cable:

The following wiring diagram shows a simple test cable including power, external (push-button) trigger and PC RS232 COM port connections.

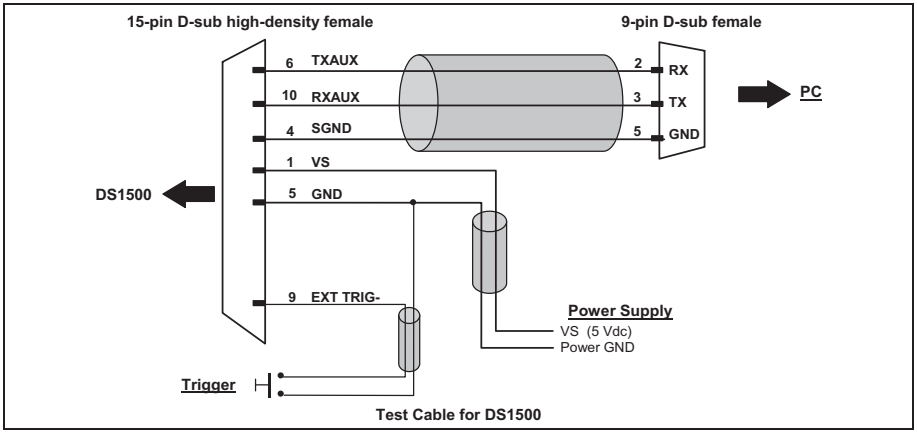

Test Cable for DS1500

NOTE

The Auxiliary RS232 interface is only available when the main interface is RS232.

2.5 POSITIONING

The DS1500 scanner is able to decode moving barcode labels at a variety of angles, however significant angular distortion may degrade reading performance.

When mounting the DS1500 take into consideration these three ideal label position angles: **Pitch 0°, Skew 15° to 30° and Tilt 0°**.

Follow the suggestions for the best orientation:

The **Pitch** angle is represented by the value **P** in Figure 16. Position the reader in order to **minimize** the **Pitch** angle.

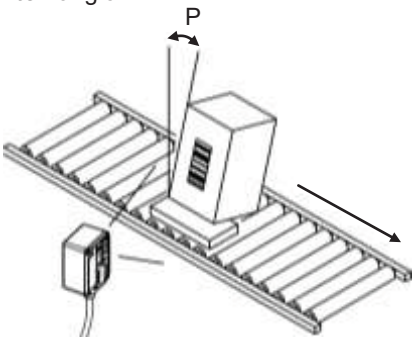

Figure 16 - Pitch Angle

The **Skew** angle is represented by the value **S** in Figure 17. Position the reader to **assure at least 10°** for the **Skew** angle. This avoids the direct reflection of the laser light emitted by the DS1500.

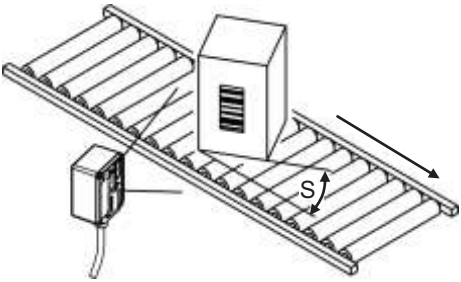

Figure 17 - Skew Angle

The **Tilt** angle is represented by the value **T** in Figure 18. Position the reader in order to **minimize** the **Tilt** angle.

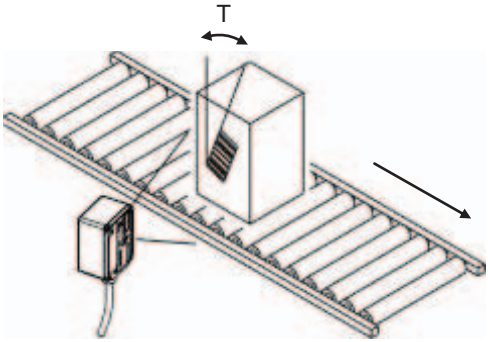

Figure 18 - Tilt Angle

By using the ACB (Advanced Code Builder) software parameter, the tilt angle is less critical and can be decoded even if the scan line doesn't cross the entire code.
See par. 3.1 or the Help On Line for details.

2.6 TYPICAL LAYOUTS

The following typical layouts refer to system hardware configurations. Dotted lines in the figures refer to optional hardware configurations within the particular layout.

These layouts also require the correct setup of the software configuration parameters. Complete software configuration procedures can be found in the **Guide To Rapid Configuration** in the WinHost Help On Line.

2.6.1 Point-to-Point

In this layout the data is transmitted to the Host on the main serial interface. Host Mode programming can be accomplished either through the main interface or the Auxiliary interface.

In Local Echo communication mode, data is transmitted on the RS232 auxiliary interface independently from the main interface selection.

When On-Line Operating mode is used, the scanner is activated by an External Trigger (photoelectric sensor) when the object enters its reading zone.

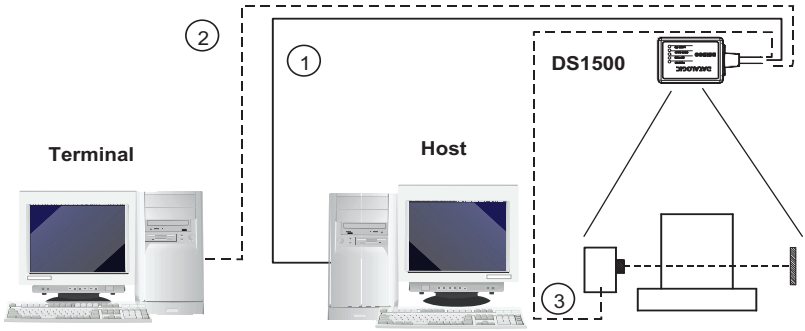

1 Main serial interface
2 Auxiliary serial interface (Local Echo)
3 External Trigger (for On-Line mode)

Figure 19 – RS232 Point-to-Point Layout

NOTE

The Auxiliary RS232 interface is only available when the main interface is RS232.

In this layout the data is transmitted to the Host on the main serial interface. Host Mode programming can be accomplished through the main interface.

When On-Line Operating mode is used, the scanner is activated by an External Trigger (photoelectric sensor) when the object enters its reading zone.

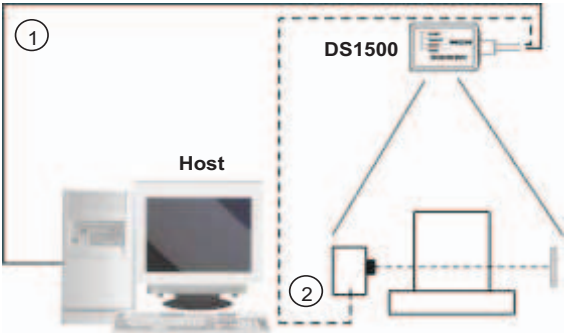

1 RS485 Full Duplex Main serial interface

2 External Trigger (for On-Line mode)

Figure 20 – RS485 Point-to-Point Layout

NOTE

The Auxiliary RS232 interface is only available when the main interface is RS232.

2.6.2 Pass-Through

Pass-through mode allows two or more devices to be connected to a single external serial interface.

Each DS1500 transmits the messages received by the Auxiliary interface onto the Main interface. All messages will be passed through this chain to the host.

When On-Line Operating mode is used, the scanner is activated by an External Trigger (photoelectric sensor) when the object enters its reading zone.

The Main and Auxiliary ports are connected as shown in the figure below:

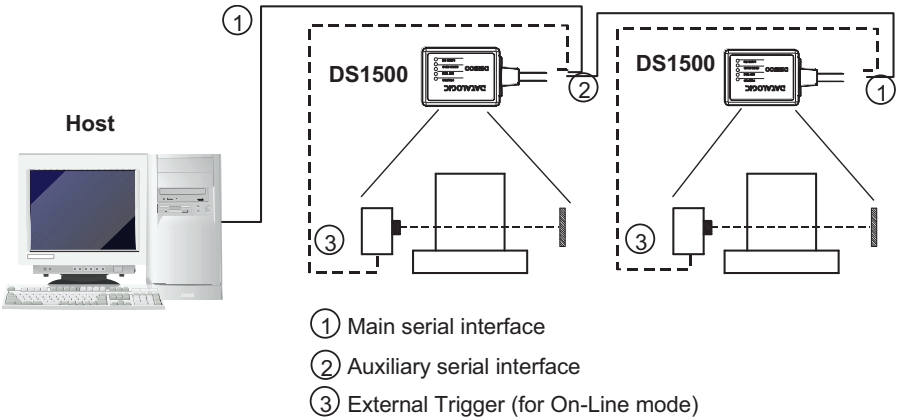

Figure 21 – Pass-Through Layout

NOTE

The Auxiliary RS232 interface is only available when the main interface is RS232.

2.6.3 RS232 Master/Slave

The RS232 master/slave connection is used to collect data from several scanners to build either a multi-point or a multi-sided reading system; there can be one master and up to 9 slaves connected together.

The Slave scanners use RS232 only on the main and auxiliary serial interfaces. Each slave DS1500 transmits the messages received by the auxiliary interface onto the main interface. All messages will be passed through this chain to the Master.
The Master scanner is connected to the Host on the main serial interface. The main interface type for the master scanner is RS232.

There is a single reading phase and a single message from the master scanner to the Host computer.

Either On-Line or Serial On-Line Operating modes can be used in this layout.

When On-Line Operating mode is used, the external trigger signal is unique to the system, however it is not necessary to bring the external trigger signal to the Slave scanners.

The main and auxiliary ports are connected as shown in the figure below.

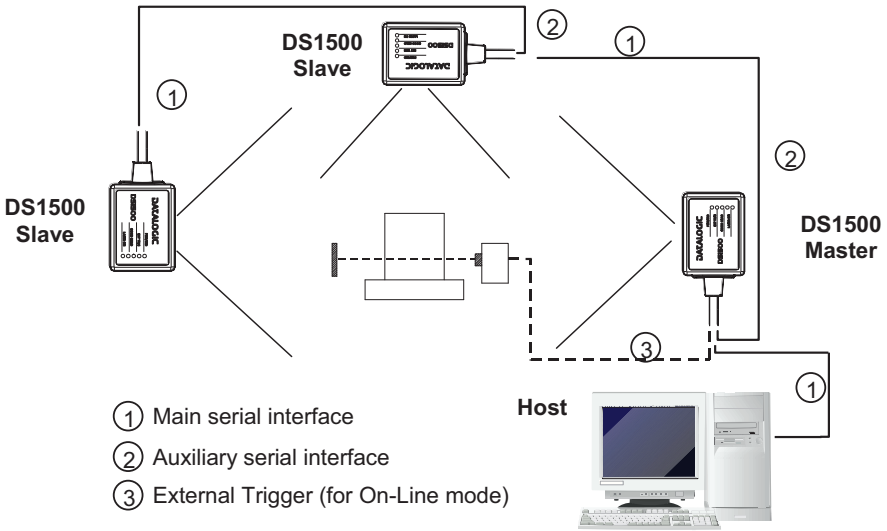

Figure 22 – RS232 Master/Slave Layout

2.6.4 Multiplexer Layout

Each scanner is connected to a Multiplexer (for example MX4000) with the RS485 half-duplex main interface.

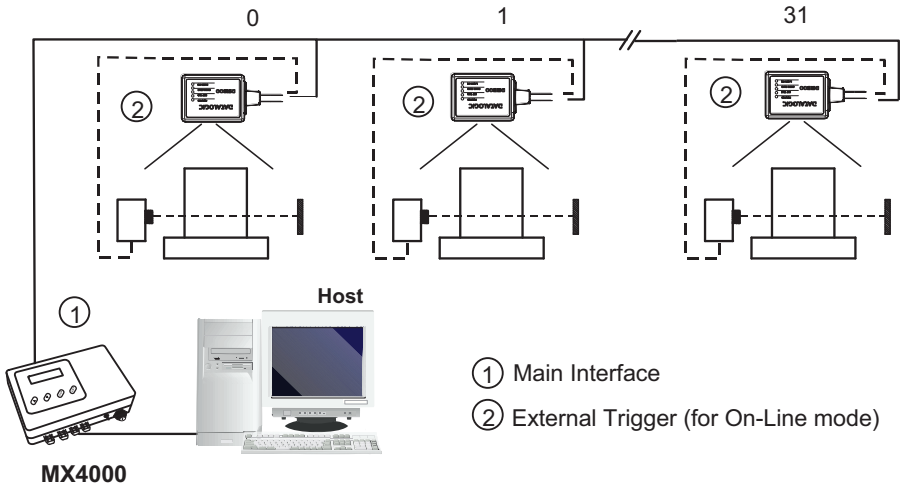

Figure 23 - Multiplexer Layout

When On-Line Operating mode is used, the scanner is activated by an External Trigger (photoelectric sensor) when the object enters its reading zone.

3 READING FEATURES

3.1 ADVANCED CODE BUILDER (ACB)

In addition to linear reading, the Advanced Code Builder (ACB) allows code reading by “stitching” together two partial reads of it. ACB is not as powerful as Advanced Code Reconstruction due to limits on tilt angle, speed and Multi-label function; but it is effective in the case of close-to-linear, small height codes, damaged codes, or poor print quality codes.

ACB is used to read a code label when the scan line does not cross the label along its entire length (excessive tilt angle).

Linear Reading

Linear Reading

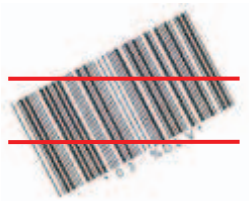

ACB Reading

ACB Reading

ACB reads two fragments of a label containing a start or a stop character and a number of digits, and puts them together to build the complete label.

ACB also has an intrinsic ability to increase the reading percentage of damaged codes as in the examples below:

ACB Readable

Not ACB Readable

ACB Readable

ACB is disabled by default but can be enabled for the following code types:

- Code 25 Interleaved
- Code 39 Family
- Codabar
- Code 128/EAN128
- EAN/UPC (without ADD-Ons)
- Code 93

3.1.1 Important ACB Reading Conditions

- **Do not use ACB for omni-directional reading stations.**
- ACB can be activated for each symbology independently from the others.
- ACB requires that the code be in movement with respect to the scanner.
- ACB requires fixed length barcode reading.
- The codes read with ACB enabled must pass in front of the scanner one at a time.

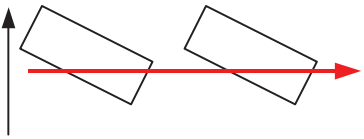

Not valid for ACB

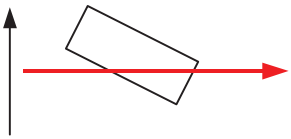

Valid for ACB

- Code concatenation and ACB are not compatible and therefore cannot be enabled simultaneously on the same code.
- For correct operation, ACB requires at least 5 scans for each of the two fragments

3.1.2 Tilt Angle Improvement with ACB

ACB allows barcode reading with an increased tilt angle. The tilt angle depends upon the code aspect ratio defined as H/L according to the table below:

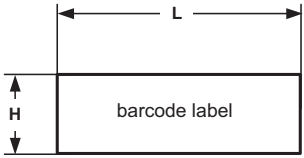

Aspect Ratio H/L	Max theoretical linear tilt angle	Max practical ACB angle
0.33	18°	30°
0.25	14°	23°
0.125	7°	11°

3.2 LINEAR CODE READING

The number of scans performed on the code by the DS1500 and therefore the decoding capability is influenced by the following parameters:

- number of scans per second
- code motion speed
- label dimensions
- scan direction with respect to code motion

At least 5 scans during the code passage should be allowed to ensure a successful read.

3.2.1 Step-Ladder Mode

If scanning is perpendicular to the code motion direction (Figure 24), the number of effective scans performed by the reader is given by the following formula:

SN = [(LH/LS) ∗ SS] – 2

Where:
SN = number of effective scans
LH = label height (in mm)
LS = label movement speed in (mm/s)
SS = number of scans per second

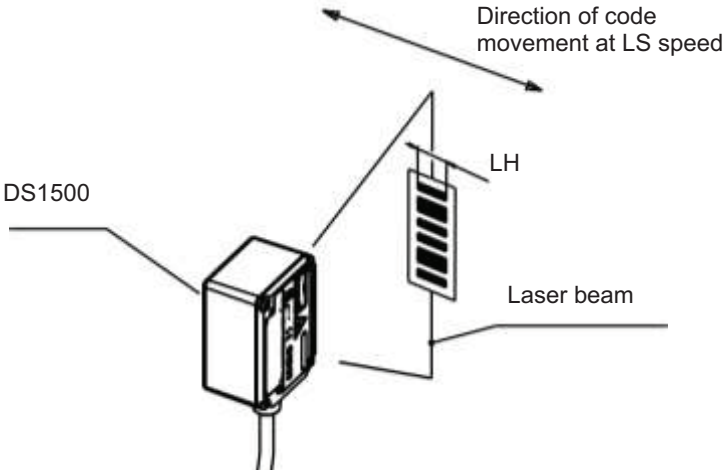

Figure 24 - "Step-Ladder" Scanning Mode

For example, the DS1500 (1200 scans/sec.) for a 20 mm high code moving at 1200 mm/s performs:

[(20/1200) ∗ 1200] - 2 = 18 effective scans.

3.2.2 Picket-Fence Mode

If scanning is parallel to the code motion, the number of effective scans is given by the following formula:

SN = [((FW-LW)/LS) * SS] -2

Where:
- SN = number of effective scans
- FW = reading field width (in mm)
- LW = label width (in mm)
- LS = label movement speed (in mm/s)
- SS = scans per second

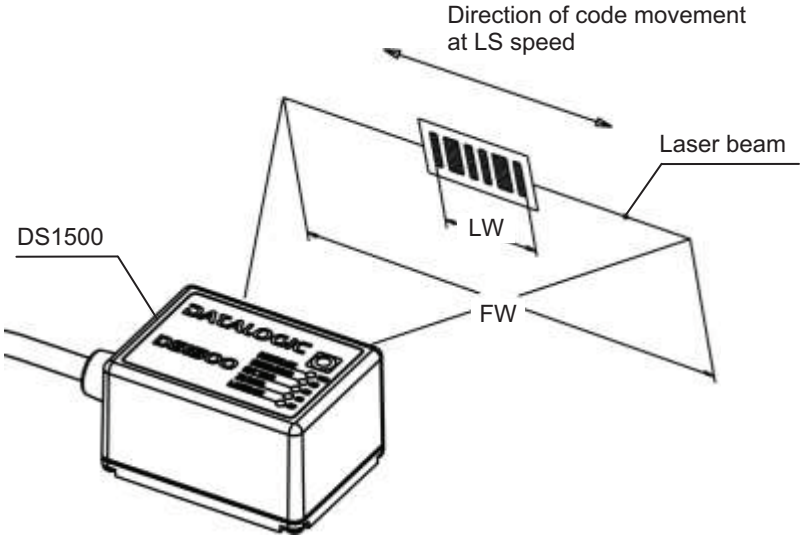

Figure 25 - "Picket-Fence" Scanning Mode

For example, for a 60 mm wide code moving in a point where the reading field is 100 mm wide at a 1500 mm/s speed, the DS1500 (1200 scans per sec.), performs:

[((100-60)/1500) * 1200] - 2 = 30 effective scans

3.3 PERFORMANCE

The DS1500 scanner has the following performances:

Version	Max Code Resolution	Speed
	mm (mils)	scans/s
1100	0.15 (6)	800
1100	0.20 (8)	1200
2100	0.10 (4)	800

Version	Reading Distance
1100	40 mm (1.6 in) - 240 mm (9.4 in) on 0.50 mm (20 mils) codes
2100	50 mm (2 in) - 125 mm (4.9 in) on 0.20mm (8 mils) codes

Refer to the diagrams given in par. 3.4 for further details on the reading features. They are taken on various resolution sample codes at a 25 °C ambient temperature, depending on the conditions in the notes under the diagrams.

3.4 READING DIAGRAMS

DS1500-1100

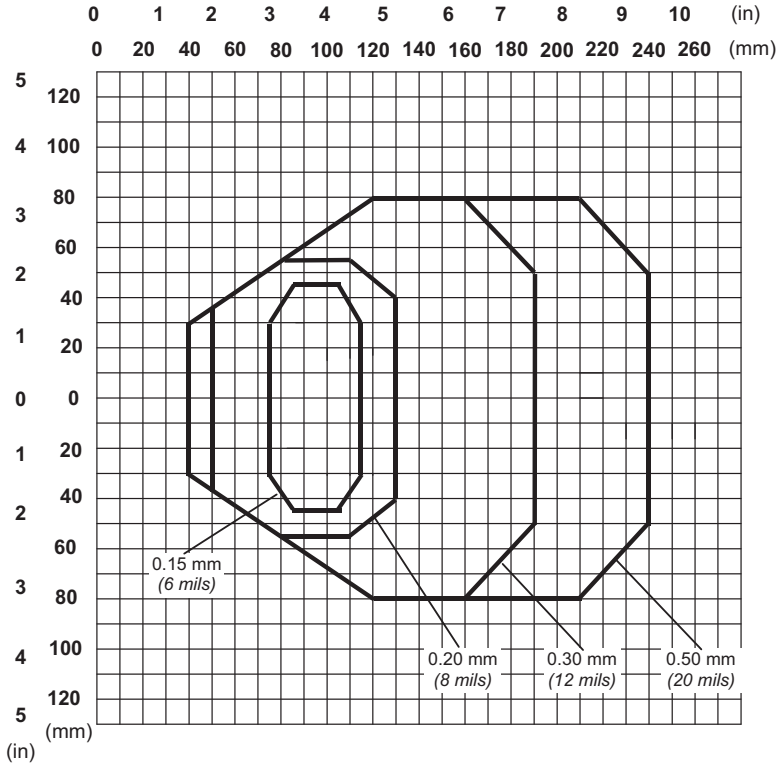

NOTE: (0,0) is the center of the laser beam output window.

CONDITIONS

Code = Interleaved 2/5 or Code 39

PCS = 0.90

"Pitch" angle = 0°

"Skew" angle = 15°

"Tilt" angle = 0°

*Motor Control = Speed_3 (800 scans/s) for 0.15mm codes, Speed_4 (1200 scans/s) for 0.20mm codes and greater

- Parameter selectable in Winhost

DS1500-2100

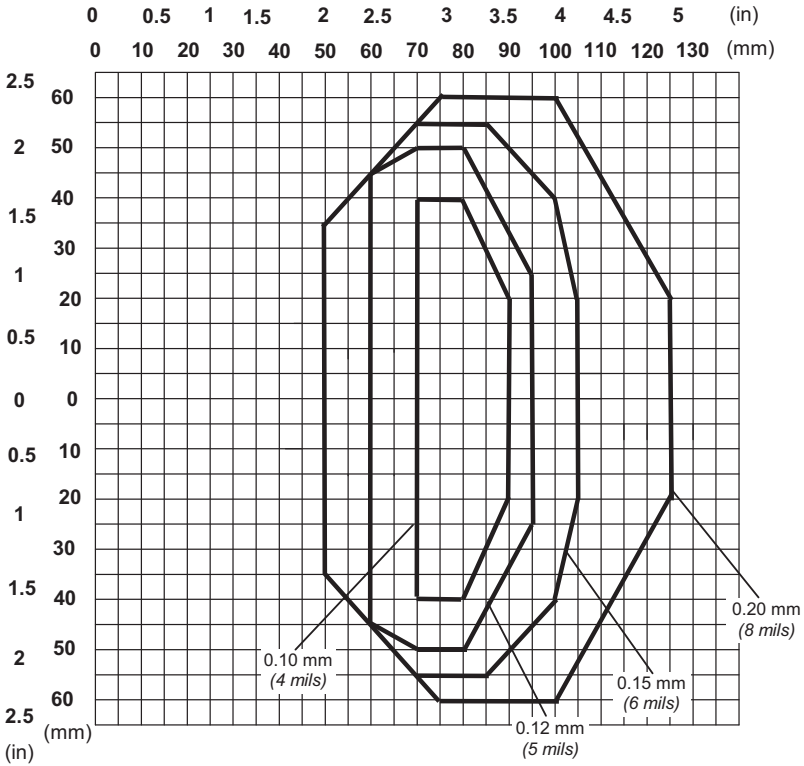

NOTE: (0,0) is the center of the laser beam output window.

CONDITIONS

Code = Interleaved 2/5 or Code 39
PCS = 0.90
"Pitch" angle = 0°
"Skew" angle = 15°
"Tilt" angle = 0°
*Motor Control = Speed_3 (800 scans/s)

- Parameter selectable in Winhost

4 MAINTENANCE

4.1 CLEANING

Clean the laser beam output window periodically for continued correct operation of the reader.

Dust, dirt, etc. on the window may alter the reading performance.

Repeat the operation frequently in particularly dirty environments.

Use soft material and alcohol to clean the window and avoid any abrasive substances.

WARNING

Clean the window of the DS1500 when the scanner is turned off or, at least, when the laser beam is deactivated.

5 TROUBLESHOOTING

5.1 GENERAL GUIDELINES

When wiring the device, pay careful attention to the pin number of the signals.

If you need information about a certain reader parameter you can refer to the WinHost program help files. Either connect the device and select the parameter you're interested in by pressing the F1 key, or select **Help/Contents/DS1500 Configuration** from the command menu.

If you're unable to fix the problem and you're going to contact your local Datalogic office or Datalogic Partner or ARC, we suggest providing (if possible) the Device Configuration files (*.cfg). Connect through WinHost and click the **Save icon** from the edit configuration window. Also note the exact Model, Serial Number and Order Number of the device.

TROUBLESHOOTING GUIDE	
Problem	**Suggestions**
Power On: the “Power On” LED is not lit	Is power connected? If using a power adapter (like PG 220), is it connected to a wall outlet? If using rail power, does rail have power? Measure voltage at pin 1 and pin 5.
On line Mode: EXT TRIG LED is not lit (when external trigger activates)	Is sensor connected to EXT TRIG pins (9 and 5 for 15-pin connector)? Is power supplied to photo sensor? Are the photo sensor LEDS (if any) working correctly? Is the sensor/reflector system aligned?
On line Mode: EXT TRIG LED is correctly lit but nothing happens (no reading results)	Is the software configuration consistent with the application condition (operating mode etc.)? In the WinHost program select the OPERATING MODE tab and check for related parameters
Serial On line Mode: the reader is not triggered (no reading results)	In the WinHost program select the OPERATING MODE tab and check if serial on line is enabled as operating mode Are the Start – Stop characters correctly assigned? Is the serial trigger source correctly connected and configured?
On line Mode and Serial On Line: Reader doesn’t respond correctly to the expected external signals end	In the WinHost program select the OPERATING MODE tab and check the TIMEOUT parameterization.

TROUBLESHOOTING GUIDE	
Problem	**Suggestions**
Reading: Not possible to read the target barcode (always returns No Read)	Check synchronization of reading pulse with object to read Is the scan line correctly positioned? Place barcode in the center of scan line and run TEST MODE (by WinHost as an Operating Mode or by the external key, see par. 1.5.2). If you still have trouble, check the following: • Is the reading distance within that allowed (see reading diagrams)? • Is the Tilt angle too large? • Is the Skew angle less than 10° (direct reflection)? • Choose the CODE tab and enable different code types (except Pharmacode). LENGTH = Variable • Is the Bar Code quality sufficient? If you had no success, try to perform the test using the BARCODE TEST CHART.
Communication: Device is not transmitting anything to the host	• Is the cable connected? • Is the correct wiring respected? • Are serial host settings equivalent to the serial device setting?
Communication: Data transferred to the host are incorrect, corrupted or incomplete	• In the WinHost program select the DATA FORMAT tab and check for values of HEADER, TERMINATOR, SEPARATOR, FILL CHARACTERS • Also check the CODE FIELD LENGTH value • Are the COM port parameters correctly assigned?
Communication: Always returns the Reader Failure Character (<BEL> char as default)	• Contact your local Datalogic office or Datalogic Partner or ARC, because either a Motor or Laser failure has occurred. • Note the exact model and Serial Number of the device
How do I obtain my units' serial numbers?	• The device's serial number is printed on a label that is affixed to the body of the reader. • Serial numbers consist of 9 characters: one letter, 2 numbers, and another letter followed by 5 numbers.

6 TECHNICAL FEATURES

ELECTRICAL FEATURES	
Input Power Supply voltage Power consumption max.	 5 Vdc ± 5% 0.4 A; 2 W
Serial Interfaces Main Auxiliary Baud Rates	 RS232; RS485 Full-duplex / Half-duplex RS232 150 to 115200
Inputs Voltage max.	External Trigger 40 Vdc
Outputs V_{CE} max. Collector current max. V_{CE} saturation Power dissipation max.	OUT1, OUT2 40 Vdc 20 mA continuous; 0.3V at 6 mA max. 100 mW at 45 °C (Ambient temp.)
OPTICAL FEATURES	
Light source Wave length (Note 1) Safety class	Semiconductor laser diode 630 to 680 nm Class 2 - EN 60825-1; Class II - CDRH
READING FEATURES (Note 2)	
Scan rate (software programmable)	800 to 1200 scans/sec
Aperture angle Maximum Reading distance Maximum resolution	See reading diagrams
USER INTERFACE	
LED indicators	Laser ON, Tx Data/ACT, Ext Trig/RDY, Good Read, Power ON

SOFTWARE FEATURES	
READABLE CODE SYMBOLOGIES * EAN/UPC EAN/UPC (including Add-on 2 and Add-on 5) * 2/5 Interleaved * Code 39 (Standard and Full ASCII) * Codabar * Code 93 * Code 128 * EAN 128 ISBT 128 Pharmacode *ACB Readable. Other symbologies available on request.	
Code Selection	up to six different codes during one reading phase
Decoding Safety	can enable multiple good reads of same code
Headers and Terminators	up to four headers and four terminators
Operating Modes	On-Line, Serial-On-Line, Automatic, Continuous, Test
Configuration Modes	• through menus using WinHost utility • receiving commands from one of the serial ports (HOST MODE)
Special Functions	ACB (Advanced Code Builder) Motor Off
Parameter Storage	Non-volatile internal EEPROM
ENVIRONMENTAL FEATURES	
Operating temperature (Note 3)	0° to 45 °C (32° to 113 °F)
Storage temperature	-20° to 70 °C (-4° to 158 °F)
Humidity max.	90% non condensing
Vibration resistance EN 60068-2-6 2 hours on each axis	14 mm @ 2 to 10 Hz 1.5 mm @ 13 to 55 Hz 2 g @ 70 to 200 Hz
Shock resistance EN 60068-2-27 3 shocks on each axis	30 g; 11 ms
Protection class EN 60529	IP65
PHYSICAL FEATURES	
Mechanical dimensions	40 x 30 x 22 mm (1.57 x 1.18 x 0.86 in)
Weight without cable	44 g (1.55 oz)

Note 1: The features given are typical at a 25 °C ambient temperature (if not otherwise indicated).

Note 2: Further details given in par. 3.3.

Note 3: If the reader is used in high temperature environments (over 40 °C), it is advised the use of the Beam-shutter (see the WinHost configuration program) and/or a thermal conductive support (such as the metal bracket provided).

A DEFAULT CONFIGURATION

The following table shows the default values of the Standard Application Program configuration Parameters.

Parameter	Default Setting
Code Setup	
Options for All Codes	
Multi Label	Disabled
Decoding Safety	1
Decoding Severity Level	3
Global No Read Character	<CAN>
Code Position Test	Disabled
ACB	Disabled for all Codes
Code 1*	
Code Type	Code 39
Check Digit	Disabled
Check Digit Tx	Disabled
Codabar Start/Stop Tx	Disabled
Code Length	Variable
Minimum Code Length	1
Maximum Code Length	48
Min. Position in Scan Line	0
Max. Position in Scan Line	54
Bar Count	Variable
Matching String Character 1	Disabled
Matching String Character 2	Disabled
Matching String Character 3	Disabled
Matching String Character 4	Disabled
Local No Read Character	<CAN>

* **Code 2-6** are disabled by default.

Parameter	Default Setting
Advanced Code Options	
Linear Reading Options	
Required Quiet Zone	Both
ACB Parameters	
Max Scan Gap	100
Min. Fragment Length	Half code
Min Overlap Length	0
Concatenation	
ABC Codabar	Do Not Chain
ISBT 128	Do Not Chain
Chain n # - Left	None
Chain n # - Right	None
Main Interface Parameters	
Serial Interface Type	RS232
Protocol Type	No Protocol
Baud Rate	9600
Parity	None
Data Bits	8
Stop Bits	1
Handshake	None
Data Transmission	Enabled
MUX32 Protocol	
Multidrop Address	31
Siemens Protocol	
Checksum	Disabled
Priority	High
Header n. 5	$0A
Header n. 6	$01
Header n. 9	$7E
Header n. 10	$7E
Fill Character	$30
Fill Position	Before Data

Parameter	Default Setting
Auxiliary Interface Parameters	
Communication Mode	Local Echo
Baud Rate	9600
Parity	None
Data Bits	8
Stop Bits	1
Handshake	None
Output Lines	
Output 1	
Event	No Read
Idle State	Normally Open
Mode	50 ms pulse
Event Counter LSB	$01 (1)
Event Counter MSB	$00
Event Counter Mode	Consecutive
Output 2	
Event	Right
Idle State	Normally Open
Mode	50 ms pulse
Event Counter LSB	$01 (1)
Event Counter MSB	$00
Event Counter Mode	Consecutive
Output Lines Activation	
Output Lines Active	On Decoding
Data Format	
Data Format	
Header 1	<STX>
Header 2	Disabled
Header 3	Disabled
Header 4	Disabled
Code Field Length	Variable
Data Justification	Left
Fill Character	Space
Laser Failure Character	<NUL>
Motor Failure Character	<BEL>
Motor Off Character	!
Data Packet Separator 1	<CR>

Parameter	Default Setting
Data Format (continued)	
Data Packet Separator 2	<LF>
Terminator 1	<CR>
Terminator 2	<LF>
Terminator 3	Disabled
Terminator 4	Disabled
Reading Phase Error Character	Disabled
Info Field Separator 1	<CR>
Info Field Separator 2	<LF>
Code Position Tx	Disabled
Code Identifier Tx	Disabled
Data Format	
Header Tx Start	With Data
Data Tx Start	On Decoding
Code Identifiers	AIM Standard
Operating Mode	
Operating Mode Selection	
Operating Mode	On-Line
Operating Mode Options	
External Trigger	Standard
External Trigger Filter	Disabled
Serial Start Character	<STX>
Serial Stop Character	<ETX>
Code Filter Depth	3
Reading Phase Timeout	Disabled
Reading Phase Off	Trigger Off/Serial Stop Character
Automatic Threshold	50
Test On	Good Read Rate
On Line Counters	Disabled
Reading System Layout	
Device Assignment	Alone
Number of Slaves (Type A)	1

Parameter	Default Setting
Reading Parameters	
Beam Shutter	Triggered
Overflow	Automatic
Overflow Ratio	7
Motor Control	Speed_4
Serial Motor Start	Disabled
Serial Motor Stop	Disabled
Verifier	
Verifier Options	
Code Verifier	Disabled
Store in EEPROM	Enabled
Wrong Code Character	Disabled
Verifier Code Values	
Verifier Code Length	Variable
Character n	All Disabled
Function Key	
Key Options	
Key Access	Enabled
Test Mode Data Tx	Disabled

GLOSSARY

ACB (Advanced Code Builder)
Advanced Code Builder (ACB) allows code reading by “stitching” together two partial reads of it. ACB is effective in reading codes positioned close-to-linear, small height codes, damaged codes, or poor print quality codes. See par. 3.1

Aperture
Term used on the required CDRH warning labels to describe the laser exit window.

Barcode
A pattern of variable-width bars and spaces which represents numeric or alphanumeric data in machine-readable form. The general format of a barcode symbol consists of a leading margin, start character, data or message character, check character (if any), stop character, and trailing margin. Within this framework, each recognizable symbology uses its own unique format.

Barcode Label
A label that carries a barcode and can be affixed to an article.

Baud Rate
A unit used to measure communications speed or data transfer rate.

CDRH (Center for Devices and Radiological Health)
This organization (a service of the Food and Drug Administration) is responsible for the safety regulations governing acceptable limitations on electronic radiation from laser devices. Datalogic devices are in compliance with the CDRH regulations.

Code Positioning
Variation in code placement that affects the ability of a scanner to read a code. The terms Pitch, Skew, and Tilt deal with the angular variations of code positioning in the X, Y and Z axes. See pars. 2.2.1 and 2.5. Variations in code placement affect the pulse width and therefore the decoding of the code. Pulse width is defined as a change from the leading edge of a bar or space to the trailing edge of a bar or space over time. Pulse width is also referred to as a transition. Tilt, pitch, and skew impact the pulse width of the code.

Decode
The process of translating a barcode into data characters using a specific set of rules for each symbology.

Decoder
As part of a barcode reading system, the electronic package which receives the signals from the scanner, performs the algorithm to interpret the signals into

meaningful data and provides the interface to other devices. The decoder is normally integrated into the scanner.

EAN
European Article Number System. The international standard barcode for retail food packages.

EEPROM
Electrically Erasable Programmable Read-Only Memory. An on-board non-volatile memory chip.

Full Duplex
Simultaneous, two-way, independent transmission in both directions.

Half Duplex
Transmission in either direction, but not simultaneously.

Host
A computer that serves other terminals in a network, providing services such as network control, database access, special programs, supervisory programs, or programming languages.

Interface
A shared boundary defined by common physical interconnection characteristics, signal characteristics and meanings of interchanged signals.

LED (Light Emitting Diode)
A low power electronic device that can serve as a visible or near infrared light source when voltage is applied continuously or in pulses. It is commonly used as an indicator light and uses less power than an incandescent light bulb but more than a Liquid Crystal Display (LCD). LEDs have extremely long lifetimes when properly operated.

Multidrop Line
A single communications circuit that interconnects many stations, each of which contains terminal devices. See RS485.

Parameter
A value that you specify to a program. Typically parameters are set to configure a device to have particular operating characteristics.

Picket-Fence Orientation
When the barcode's bars are positioned vertically on the product, causing them to appear as a picket fence. The first bar will enter the scan window first. See par. 3.2.2.

Pitch
Rotation of a code pattern about the X-axis. The normal distance between center line or adjacent characters. See pars. 2.2.1 and 2.5.

Position
The position of a scanner or light source in relation to the target of a receiving element.

Protocol
A formal set of conventions governing the formatting and relative timing of message exchange between two communicating systems.

Raster
The process of projecting the laser beam at varied angles spaced evenly from each other. Typically, the mirrored rotor surfaces are angled to create multiple scan lines instead of a single beam.

Resolution
The narrowest element dimension which can be distinguished by a particular reading device or printed with a particular device or method.

RS232
Interface between data terminal equipment and data communication equipment employing serial binary data interchange.

RS485
Interface that specifies the electrical characteristics of generators and receivers for use in balanced digital multipoint systems such as on a Multidrop line.

Scanner
A device that examines a printed pattern (barcode) and either passes the uninterpreted data to a decoder or decodes the data and passes it onto the Host system.

Serial Port
An I/O port used to connect a scanner to your computer, generally identifiable by a 9-pin or 25-pin connector.

Signal
An impulse or fluctuating electrical quantity (i.e.: a voltage or current) the variations of which represent changes in information.

Skew
Rotation about the Y-axis. Rotational deviation from correct horizontal and vertical orientation; may apply to single character, line or entire encoded item. See pars. 2.2.1 and 2.5.

Step-Ladder orientation
When the barcode's bars are positioned horizontally on the product, causing them to appear as a ladder. The ends of all bars will enter the scan window first. See par. 3.2.1.

Symbol
A combination of characters including start/stop and checksum characters, as required, that form a complete scannable barcode.

Tilt
Rotation around the Z axis. Used to describe the position of the barcode with respect to the laser scan line. See pars. 2.5 and 3.1.

Trigger Signal
A signal, typically provided by a photoelectric sensor or proximity switch, which informs the scanner of the presence of an object within its reading zone.

UPC
Acronym for Universal Product Code. The standard barcode type for retail food packaging in the United States.

Visible Laser Diode
A light source used in scanners to illuminate the barcode symbol. Generates visible red light at wavelengths between 630 and 680 nm.

INDEX

A

Accessories, 6
Advanced Code Builder, 29
Applications, 2

C

CE Compliance, vii
Cleaning, 37

E

Electrical Connections, 11
  Auxiliary RS232 Interface, 18
  Inputs, 19
  Main Serial Interface, 12
  Outputs, 20

G

General View, viii
Glossary, 48
Guide to Installation, ix

I

Important ACB Reading Conditions, 30
Indicators, 3
Installation, 7
  Mounting DS1500, 10

M

Maintenance, 37
Mechanical Installation, 8

P

Package Contents, 7
Patents, v
Performance, 34
Positioning, 22
Power Supply, 12

R

Reading Diagrams, 35
Reading Features, 29
  Picket-Fence Mode, 33
  Step-Ladder Mode, 32
Reference Documentation, v
RS232 Interface, 13
RS485 Full-Duplex Interface, 14
RS485 Half-Duplex Interface, 16

S

Safety Regulations, vi
  Laser Safety, vi
  Power Supply, vii

T

Technical Features, 41
Tilt Angle Improvement with ACB, 31
Troubleshooting, 38
Typical Layouts, 24
  Multiplexer Layout, 28
  Pass-Through, 26
  Point-to-Point, 24
  RS232 Master/Slave, 27

DATALOGIC

www.datalogic.com