REFERENCE MANUAL

> DS2100N / DS2400N

DATALOGIC

Datalogic S.r.l.
Via S. Vitalino 13
40012 Calderara di Reno
Bologna - Italy

DS2100N / DS2400N Reference Manual

Ed.: 07/2017

© 2007 – 2017 Datalogic S.p.A. and/or its affiliates ◆ ALL RIGHTS RESERVED. ◆ Without limiting the rights under copyright, no part of this documentation may be reproduced, stored in or introduced into a retrieval system, or transmitted in any form or by any means, or for any purpose, without the express written permission of Datalogic S.p.A. and/or its affiliates.

Datalogic and the Datalogic logo are registered trademarks of Datalogic S.p.A. in many countries, including the U.S.A. and the E.U.

ID-NET, Genius, Subzero, ACR and X-PRESS are trademarks of Datalogic S.p.A. and/or its affiliates. All other trademarks and brands are property of their respective owners.

Datalogic shall not be liable for technical or editorial errors or omissions contained herein, nor for incidental or consequential damages resulting from the use of this material.

07/07/17

CONTENTS

REFERENCES vi
Conventions vi
Reference Documentation vi
Support Through The Website vi
Patents vi

SAFETY AND COMPLIANCE NOTICES vii
Laser Safety vii
Power Supply ix
FCC Compliance ix
CE Compliance ix
EAC Compliance ix
Bureau of Indian Standard (BIS) x
Handling x

GENERAL VIEW xii

1 RAPID CONFIGURATION 1
Step 1 – Connect the System 1
Step 3 – X-PRESS™ Configuration 4
Step 4 – Installing Genius™ Configuration Program 7
Step 5 – Test Mode 12
Advanced Scanner Configuration 13

2 INTRODUCTION 14
2.1 Product Description 14
2.1.1 Indicators 15
2.2 ID-NET™ 15
2.2.1 How To Setup/Configure the Scanner Network 17
2.3 X-PRESS™ Human Machine Interface 18
2.3.1 Diagnostic Indication 18
2.3.2 X-PRESS™ Functions 19
2.4 External Memory Backup & Restore 21
2.5 Automatic Scanner Replacement 24
2.6 Subzero™ Temperature Models 25
2.7 IP Address Alignment using Genius™ Discovery 26
2.8 Model Descriptions 29
2.8.1 DS2100N Models 29
2.8.2 DS2400N Models 30
2.9 Accessories 31

3 MECHANICAL INSTALLATION 33
3.1 Package Contents 33
3.2 Overall Dimensions 34
3.2.1 Mounting the Scanner 38
3.3 Mounting Scanner Accessories 39
3.3.1 Mounting a GFC-2020 Accessory Lateral Output Deflection Mirror 39
3.3.2 Mounting a GFC-2100 Accessory Lateral Output Deflection Mirror 40
3.3.3 Mounting a GFC-200 Accessory Contact Reading Mirror 41
3.3.4 Mounting an OM2000N Accessory Oscillating Mirror 44

3.4 Positioning 47

4 ELECTRICAL INSTALLATION 48
4.1 Power Supply 49
4.2 Main Serial Interface 49
4.2.1 RS232 Interface 50
4.2.2 RS485 Full-Duplex Interface 51
4.2.3 RS485 Half-Duplex Interface 52
4.3 ID-NET™ Interface 54
4.3.1 ID-NET™ Cables 54
4.3.2 ID-NET™ Response Time 55
4.3.3 ID-NET™ Network Termination 59
4.4 Auxiliary RS232 Interface 59
4.5 Inputs 60
4.5.1 Code Verifier 63
4.6 Outputs 63
4.7 User Interface - Host 65

5 TYPICAL LAYOUTS 66
5.1 Point-to-Point 66
5.3 Profinet-IO Networks 69
5.3.1 Single Station Layout 69
5.3.2 Multi Station Layout 70
5.4 ID-NET™ Synchronized Networks 71
5.5 ID-NET™ Multidata Networks 76
5.6 Pass-Through 77
5.7 Other Layouts 78

6 READING FEATURES 79
6.1 Advanced Code Reconstruction (ACR™-Lite) 79
6.1.1 Important ACR™-Lite Reading Conditions 80
6.1.2 Tilt Angle for Advanced Code Reconstruction 80
6.1.3 Advanced Code Reconstruction Reading Conditions 82
6.2 Linear Code Reading 83
6.2.1 Step-Ladder Mode 83
6.2.2 Picket-Fence Mode 84
6.3 Performance 85
6.3.1 Raster 86
6.4 Reading Diagrams 87
6.4.1 DS2100N 87
6.4.2 DS2400N 93

7 MAINTENANCE 96
7.1 Cleaning 96

8 TROUBLESHOOTING 97
8.1 General Guidelines 97

9 TECHNICAL FEATURES 100

A ALTERNATIVE CONNECTIONS FOR SERIAL MODELS 103
Power, COM and I/O Connector 103
ID-NET™ Network Termination 104
Inputs 104
Outputs 105

User Interface - Serial Host 106

B ALTERNATIVE CONNECTIONS FOR ETHERNET MODELS 107
Power, COM and I/O Connector 107
On-Board Ethernet Connector 108
ID-NET™ Network Termination 108
Inputs 108
Outputs 109

C CONNECTIONS FOR PROFINET-IO MODELS 111
On-Board Profinet-IO Connectors (2) 111
Power 111

GLOSSARY 112

INDEX 115

REFERENCES

CONVENTIONS

This manual uses the following conventions:

“User” or “Operator” refers to anyone using the scanner.

“Device” refers to the scanner.

“You” refers to the System Administrator or Technical Support person using this manual to install, mount, operate, maintain or troubleshoot the scanner.

REFERENCE DOCUMENTATION

The documentation related to the scanner management is listed below:

- CBX100 Installation Manual
- CBX100 LT Installation Manual (for Subzero models)
- CBX500 Installation Manual
- CBX Accessory Manuals
- OM2000N Installation Manual
- Genius™ Help On Line

SUPPORT THROUGH THE WEBSITE

Datalogic provides several services as well as technical support through its website. Log on to **www.datalogic.com** and click on the **SUPPORT** > **Unattended Scanning Systems** category link. From this page you can select your product model from the dropdown list which gives you access to:

- Downloads including Data Sheets, Manuals, Software & Utilities, and Drawings;
- Repair Program for On-Line Return Material Authorizations (RMAs) plus Repair Center contact information;
- Service Program containing details about Maintenance Agreements;
- Technical Support through email or phone.

PATENTS

See www.patents.datalogic.com for patent list.

These products are covered by one or more of the following patents:

Design patents: EP002486514, USD743397, ZL201430537609.3
Utility patents: EP0789315B1, EP1217571B1, GB2345568B, IT0282308, US5992740, US6056198, US6273336, US6443360, US9355292

SAFETY AND COMPLIANCE NOTICES

CAUTION: Subzero model scanners must not be opened in an uncontrolled environment.

LASER SAFETY

The following information is provided to comply with the rules imposed by international authorities and refers to the correct use of the scanner.

Standard Regulations

This scanner utilizes a low-power laser diode. Although staring directly at the laser beam momentarily causes no known biological damage, avoid staring at the beam as one would with any very strong light source, such as the sun. Avoid that the laser beam hits the eye of an observer, even through reflective surfaces such as mirrors, etc.

This product conforms to the applicable requirements of IEC 60825-1 and complies with 21 CFR 1040.10 except for deviations pursuant to Laser Notice N° 50, date June 24, 2007. The scanner is classified as a Class 2 laser product according to IEC 60825-1 regulations.

There is a safety device, which allows the laser to be switched on only if the motor is rotating above the threshold for its correct scanning speed.

The laser beam can be switched off through a software command (see also the Genius™ Help On Line).

WARNING: Use of controls or adjustments or performance of procedures other than those specified herein may result in exposure to hazardous visible laser light.

The laser light is visible to the human eye and is emitted from the window on the front of the scanner (Figure A, 7).

Warning labels indicating exposure to laser light and the device classification are applied onto the body of the scanner (Figure A, 1).

Disconnect the power supply when opening the device during maintenance or installation to avoid exposure to hazardous laser light.

The laser diode used in this device is classified as a class 3B laser product according to EN 60825-1 regulations and as a Class IIIb laser product according to CDRH regulations.

Any violation of the optic parts in particular can cause radiation up to the maximum level of the laser diode (35 mW at 630 to 680 nm).

Warning and Device Class Labels

Produit(s) conforme selon 21CFR 1040.10 sauf des dérogations relatives à la Laser Notice N° 50, date Juin 24, 2007.

Dans le paquet il y a l'étiquette(s) pour les pays où le texte d'avertissement en français sont obligatoires. Le(s) mettre sur le produit à la place de la version anglaise.

Exemple d'étiquettes d'avertissement laser

POWER SUPPLY

This product is intended to be installed by Qualified Personnel only.

This product is intended to be connected to a UL Listed or CSA Certified Power Unit marked LPS or “Class 2”.

FCC COMPLIANCE

Modifications or changes to this equipment without the expressed written approval of Datalogic could void the authority to use the equipment.

This device complies with PART 15 of the FCC Rules. Operation is subject to the following two conditions: (1) This device may not cause harmful interference, and (2) this device must accept any interference received, including interference which may cause undesired operation.

This equipment has been tested and found to comply with the limits for a Class A digital device, pursuant to part 15 of the FCC Rules. These limits are designed to provide reasonable protection against harmful interference when the equipment is operated in a commercial environment. This equipment generates, uses, and can radiate radio frequency energy and, if not installed and used in accordance with the instruction manual, may cause harmful interference to radio communications. Operation of this equipment in a residential area is likely to cause harmful interference in which case the user will be required to correct the interference at his own expense.

CE COMPLIANCE

CE marking states the compliance of the product with essential requirements listed in the applicable European directive. Since the directives and applicable standards are subject to continuous updates, and since Datalogic promptly adopts these updates, therefore the EU declaration of conformity is a living document. The EU declaration of conformity is available for competent authorities and customers through Datalogic commercial reference contacts. Since April 20th, 2016 the main European directives applicable to Datalogic products require inclusion of an adequate analysis and assessment of the risk(s). This evaluation was carried out in relation to the applicable points of the standards listed in the Declaration of Conformity. Datalogic products are mainly designed for integration purposes into more complex systems. For this reason it is under the responsibility of the system integrator to do a new risk assessment regarding the final installation.

Warning: This is a Class A product. In a domestic environment this product may cause radio interference in which case the user may be required to take adequate measures.

EAC COMPLIANCE

Customs Union:
The CU Conformity certification has been achieved; this allows the Product to bear the Eurasian mark of conformity.

BUREAU OF INDIAN STANDARD (BIS)

Self Declaration – Conforming to IS 13252 (Part 1):2010, R-41009288.

HANDLING

The scanner is designed to be used in an industrial environment and is built to withstand vibration and shock when correctly installed, however it is also a precision product and therefore before and during installation it must be handled correctly to avoid damage.

- avoid that the scanners hit one another causing damage. They should be handled separately.

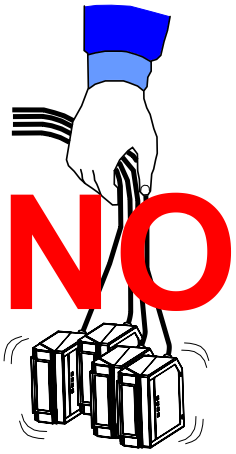

- avoid that the scanners are dropped (exceeding shock limits).

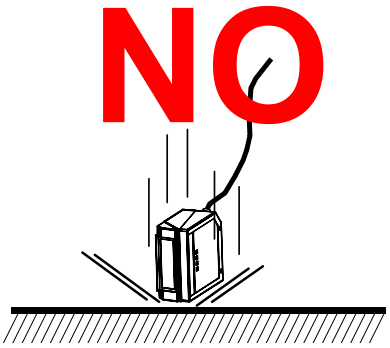

- do not fine tune the positioning by striking the scanner or bracket.

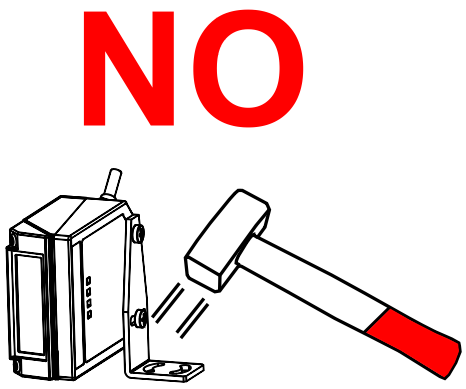

- do not weld the scanner into position which can cause electrostatic, heat or output window damage.

- do not spray paint near the scanner which can cause output window damage.

GENERAL VIEW

DS2100N / DS2400N
Serial and Subzero Models

Figure A

1. Warning and Device Class Labels
2. Power - Serial Interfaces - I/O Cable
3. Power On LED
4. Mounting Holes (4)
5. Ready LED
6. Good LED
7. Trigger LED
8. Laser Beam Output Window
9. Com LED
10. Status LED
11. X-PRESS™ Push Button
12. Accessory Mounting Holes
13. Subzero Model Logo

DS2100N / DS2400N
Built-In Ethernet Models

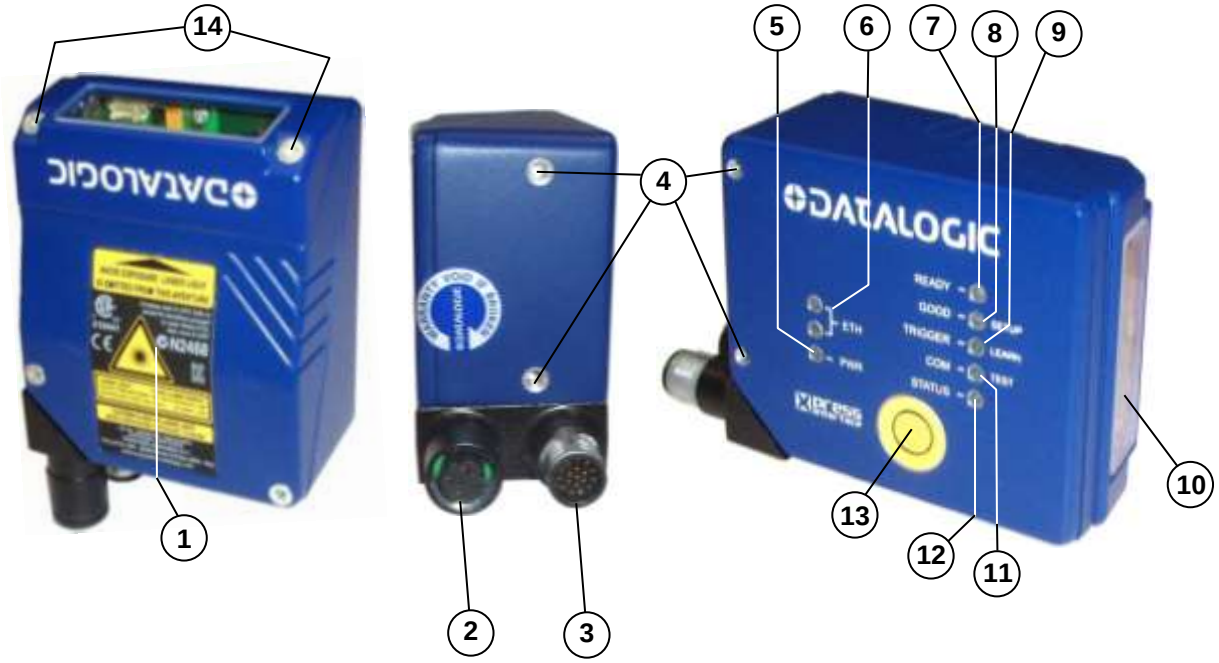

Figure B

1. Warning and Device Class Labels
2. Ethernet Connector
3. Power - Serial Interfaces - I/O Connector
4. Mounting Holes (4)
5. Power On LED
6. Ethernet Connection LED
7. Ready LED
8. Good LED
9. Trigger LED
10. Laser Beam Output Window
11. Com LED
12. Status LED
13. X-PRESS™ Push Button
14. Accessory Mounting Holes

DS2100N / DS2400N
Profinet-IO Models

Figure C

1. Warning and Device Class Labels
2. Profinet-IO Connector 1
3. Power Connector
4. Profinet-IO Connector 2
5. Mounting Holes (4)
6. Power On LED
7. Profinet-IO Connection 1 LED
8. Profinet-IO Connection 2 LED
9. Ready LED
10. Good LED
11. Trigger LED
12. Laser Beam Output Window
13. Com LED
14. Status LED
15. X-PRESS™ Push Button
16. Accessory Mounting Holes

1 RAPID CONFIGURATION

NOTE: This chapter illustrates a Stand Alone application. For other types of installations, such as ID-NET™, Fieldbus, Pass-Through, Layout, etc., refer to chapters 4, and 5. For complete scanner configuration using the Genius™ configuration program, refer to the Context-Sensitive Help On-Line.

STEP 1 – CONNECT THE SYSTEM

To connect the system in a Stand Alone configuration, you need the hardware indicated in Figure 1.

In this layout the data is transmitted to the Host on the main serial interface.

In Local Echo communication mode, data is transmitted on the RS232 auxiliary interface independently from the main interface selection.

When On-Line Operating mode is used, the scanner is activated by an External Trigger (photoelectric sensor) when the object enters its reading zone.

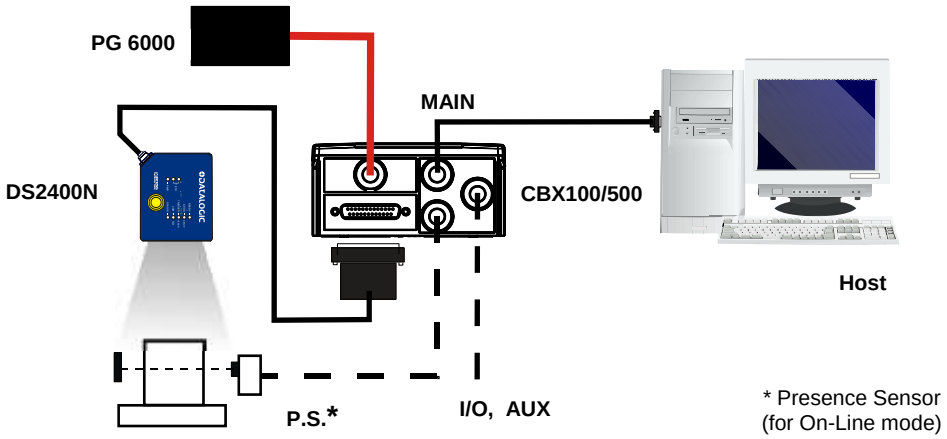

Figure 1 – Scanner in Stand Alone Layout

CBX100/500 Pinout

The table below gives the pinout of the CBX100/500 terminal block connectors. Use this pinout when the scanner reader is connected by means of the CBX100/500:

CBX100/500 Terminal Block Connectors			
Input Power		**Outputs**	
Vdc	Power Supply Input Voltage +	+V	Power Source - Outputs
GND	Power Supply Input Voltage -	-V	Power Reference - Outputs
Earth	Protection Earth Ground	O1+	Output 1 +
		O1-	Output 1 -
Inputs		O2+	Output 2 +
+V	Power Source – External Trigger	O2-	Output 2 -
I1A	External Trigger A (polarity insensitive)	**Auxiliary Interface**	
I1B	External Trigger B (polarity insensitive)	TX	Auxiliary Interface TX
-V	Power Reference – External Trigger	RX	Auxiliary Interface RX
+V	Power Source – Inputs	SGND	Auxiliary Interface Reference
I2A	Input 2 A (polarity insensitive)	**ID-NET™**	
I2B	Input 2 B (polarity insensitive)	REF	Network Reference
-V	Power Reference – Inputs	ID+	ID-NET™ network +
Shield		ID-	ID-NET™ network -
Shield	Network Cable Shield		

Main Interface			
	RS232	**RS485 Full-Duplex**	**RS485 Half-Duplex**
	TX	TX+	RTX+
	RTS	TX-	RTX-
	RX	*RX+	
	CTS	*RX-	
	SGND	SGND	SGND

***** Do not leave floating, see par. 4.2.2 for connection details.

CAUTION: Do not connect GND, SGND and REF to different (external) ground references. GND, SGND and REF are internally connected through filtering circuitry which can be permanently damaged if subjected to voltage drops over 0.8 Vdc.

Step 2 – Mounting and Positioning the System

1. To mount the scanner, use the mounting bracket to obtain the most suitable position for the reader as shown in the figures below.

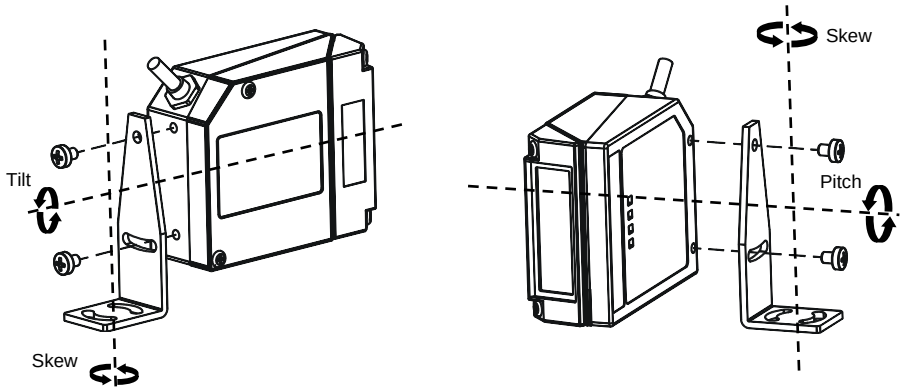

Figure 2 - Positioning with Mounting Bracket

2. When mounting the scanner take into consideration these three ideal label position angles: **Skew 10° to 30°, Tilt 0° and Pitch 0°**.

Assure at least 10° **Minimize**

Figure 3 –Skew and Tilt Angles

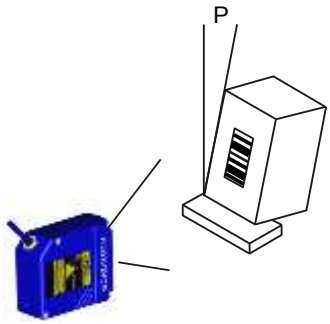

Minimize

Figure 4 – Pitch Angle

3. Refer to the Reading Diagrams in par. 6.4 to decide the distance your scanner should be positioned at.

STEP 3 – X-PRESS™ CONFIGURATION

X-PRESS™ is the intuitive Human Machine Interface designed to improve ease of installation and maintenance.

Status and diagnostic information are clearly presented by means of the five colored LEDs, whereas the single push button gives immediate access to the following relevant functions:

- *AutoSetup* to self-optimize and auto-configure reading performance in demanding applications
- *AutoLearn* to self-detect and auto-configure for reading unknown barcodes (by type and length)
- *Test Mode* with bar-graph visualization to check static reading performance

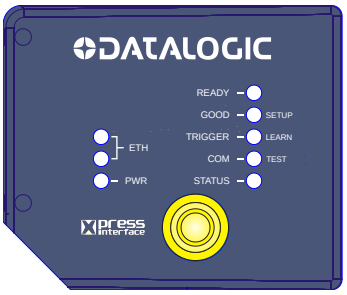

NOTE: If using the OM2000N accessory, when entering the X-PRESS™ interface, the Oscillating Mirror remains in the default fixed position (-15°) in order to make barcode reading easier while performing the X-PRESS™ functions.

The colors and meaning of the five LEDs are illustrated in the following table:

READY (green)	This LED indicates the device is ready to operate. For Subzero models this LED blinks during the warm-up phase.
GOOD (green)	This LED confirms successful reading.
TRIGGER (yellow)	This LED indicates the status of the reading phase. *
COM (yellow)	This LED indicates active communication on main serial port. **
STATUS (red)	This LED indicates a NO READ result.

* In On-Line mode the TRIGGER LED corresponds to the active reading phase signaled by the Presence Sensor. In Automatic and Continuous modes the TRIGGER LED is always on indicating that the reader is ready to read a code.

** When connected to a Fieldbus network through the CBX500, the COM LED is always active, even in the absence of data transmission, because of polling activity on the Fieldbus network.

During the reader startup (reset or restart phase), all the LEDs blink for one second.

PWR (blue)	This LED indicates that the reader is connected to the power supply. (This LED is located next to the cable on Serial models).
ETH (yellow)	This LED indicates connection to the on-board Ethernet or Profinet-IO network.

Auto Learn

If you are configuring your scanner using X-PRESS™, you must start with the *Auto Learn* procedure.

1. Enter the *Auto Learn* function by holding the X-PRESS™ push button pressed until the LEARN LED is on.
2. Release the button to enter the *Auto Learn* function.
   Once entered, the reader starts a procedure to automatically detect and recognize barcodes (by type and length), which are presented to it (*). The laser turns on and the LEARN LED blinks to indicate the ongoing process.

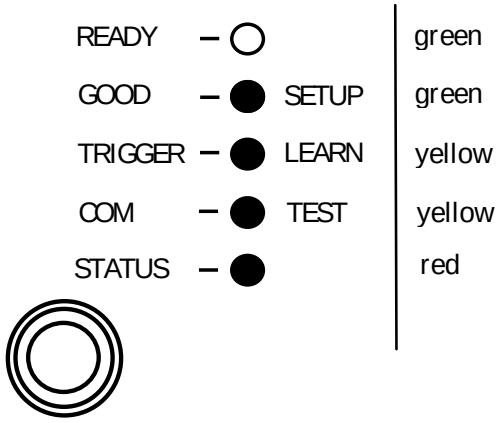

Figure 5 – X-PRESS™ Interface: Auto Learn Function

The procedure is as follows:

A) **place** the desired barcode on the scanline.

B) **wait** until the LEARN LED stays steady on (indicating the reader has detected the barcode).

C) **repeat**, if needed, the above two steps to program up to 10 different barcodes (the LEARN LED returns to the blinking state for the next code). If more than one barcode is detected in the scan line, the Multi Label mode is enabled (refer to the “2K/4K Family Software Configuration Parameter Guide” Help file).

3. **Exit** the process by pressing the X-PRESS™ push button once. The scanner will restart at the end of the process, and then the detected barcodes are automatically configured in scanner memory.

NOTE: If the barcode cannot be read because of low contrast or excessive ambient light, you can perform the AutoSetup function to optimize the optical parameters. Then you can perform AutoLearn to recognize the barcode symbology.

NOTE: On exit from Autolearn, the following parameters are forced: Code Combination = Single Label, Reading Mode = Linear. If necessary, these parameters can be changed through Genius™.

* In case of Programming Barcodes, refer to the “Setup Procedure Using Programming Barcodes” document in the product CD.

Auto Setup (Optional)

At the end of the *Auto Learn* procedure, you have the possibility to follow the *Auto Setup* procedure to set up the reading parameters.

1. Enter the *Auto Setup* function by holding the X-PRESS™ push button pressed until the SETUP LED is on.
2. Release the button to enter the *Auto Setup* function.
3. Once entered, if a barcode label is positioned in front of the scanline, the scanner automatically performs the optimal setup of the reading parameters for that specific barcode.

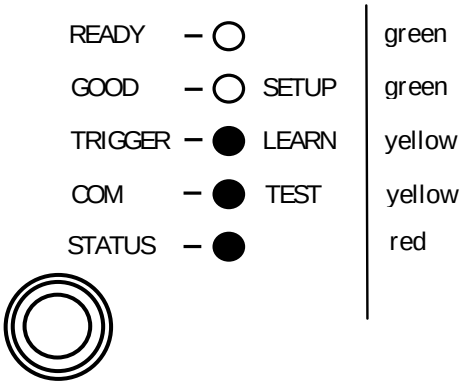

Figure 6 – X-PRESS™ Interface: Auto Setup Function

The procedure is as follows:

A) **place** the desired barcode on the scanline.

B) **enter** the AutoSetup function (the laser turns on and the SETUP LED blinks to indicate the ongoing process)

C) **wait** until the SETUP LED stays steady on (indicating the reader has detected the barcode)

This procedure ends either when the barcode is successfully decoded or after a timeout of about 7 (seven) seconds.

The scanner will restart at the end of the process, and then the optimized reading parameters for that barcode are automatically configured in scanner memory.

NOTE: If your application has been configured using X-PRESS™, go to STEP 5.

Reset Scanner to Factory Default (Optional)

If it ever becomes necessary to reset the scanner to the factory default values, you can perform this by holding the X-PRESS™ push-button pressed while powering up the scanner and waiting for all LEDs to blink simultaneously three times before releasing the push button.

This procedure takes ≈ 5-6 seconds for Serial Models, ≈ 10 seconds for Ethernet Models, ≈ 20 seconds for Profinet-IO models. At the end of the procedure the Configuration and Environmental parameters are reset. If connected through a CBX500 with display module, the message "Default Set" is shown on the display.

STEP 4 – INSTALLING GENIUS™ CONFIGURATION PROGRAM

Genius™ is a Datalogic scanner configuration tool providing several important advantages:

- Wizard approach for new users;
- Multi-language version;
- Defined configuration directly stored in the reader;
- Communication protocol independent from the physical interface allowing to consider the reader as a remote object to be configured and monitored.

To install Genius™, turn on the PC that will be used for the configuration, running Windows 98, 2000/NT, XP, Vista or 7, then insert the Genius™ CD-ROM, wait for the CD to autorun and follow the installation procedure.

This configuration procedure assumes scanner connection to a CBX100/500. Genius™, running on a laptop computer, is connected to the scanner auxiliary port through the CBX100/500 9-pin connector. To communicate with the scanner, Genius™ performs an auto baudrate detection starting from its default parameters which are 115200, 8, N, 1. These parameters can also be set in the Genius™ Tools>Options>Communications window.

Wizard for Quick Reader Setup

After installing the Genius™ software program the following window appears asking the user to choose the desired configuration level.

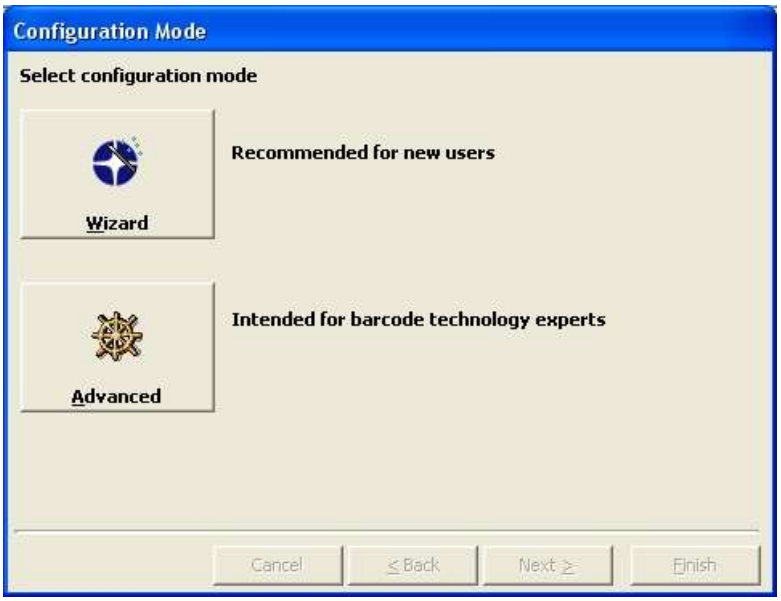

Figure 7 - Genius™ Wizard Opening Window

The Wizard option is advised for rapid configuration or new users, since it shows a step-by-step scanner configuration.

1. Select the *Create a new configuration* button.

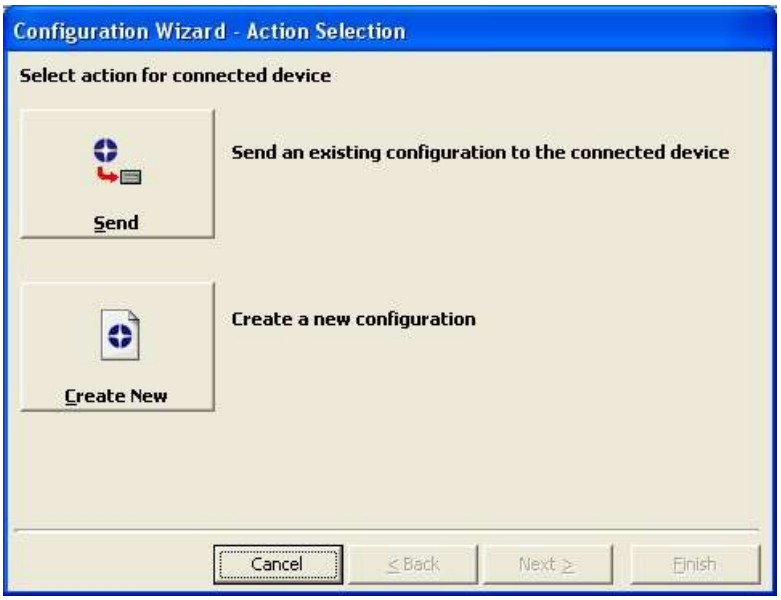

You will be guided through the configuration being asked to define the following parameters:

a. Barcode selection and definition

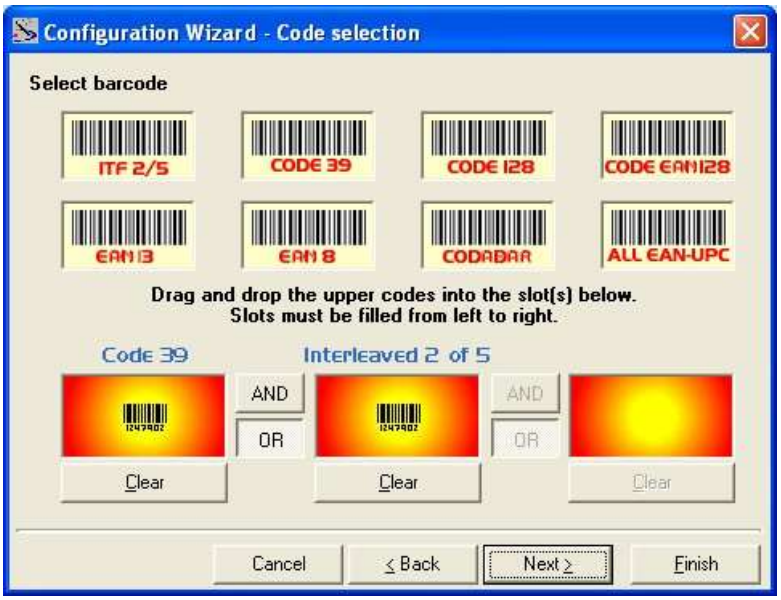

b. Operating mode selection and definition

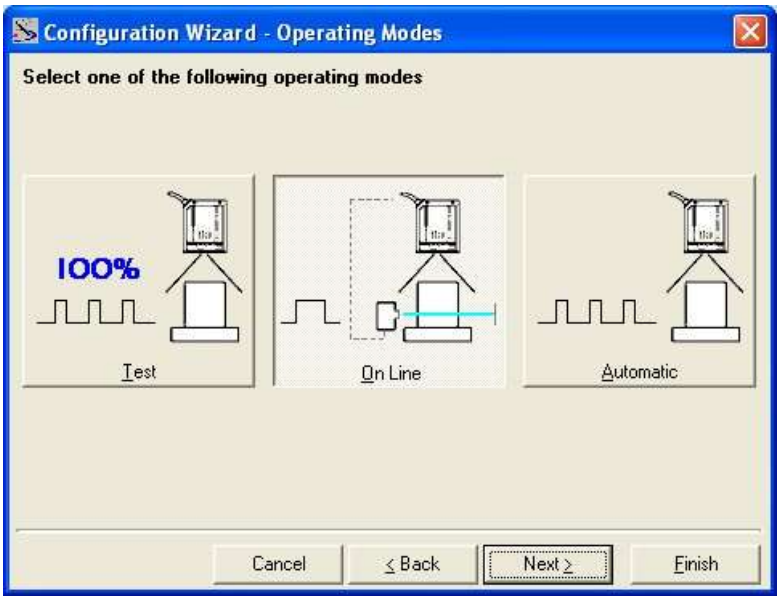

c. Digital Outputs configuration

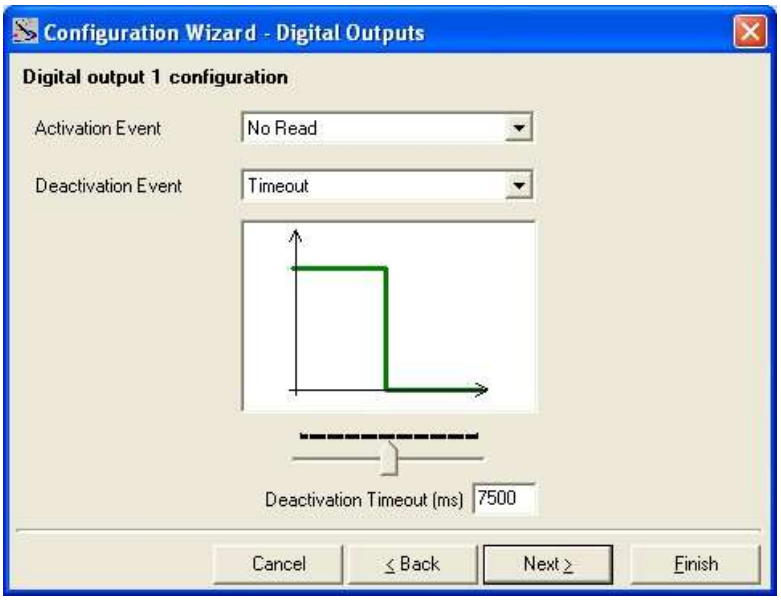

d. Hardware interface selection

e. Output data format configuration

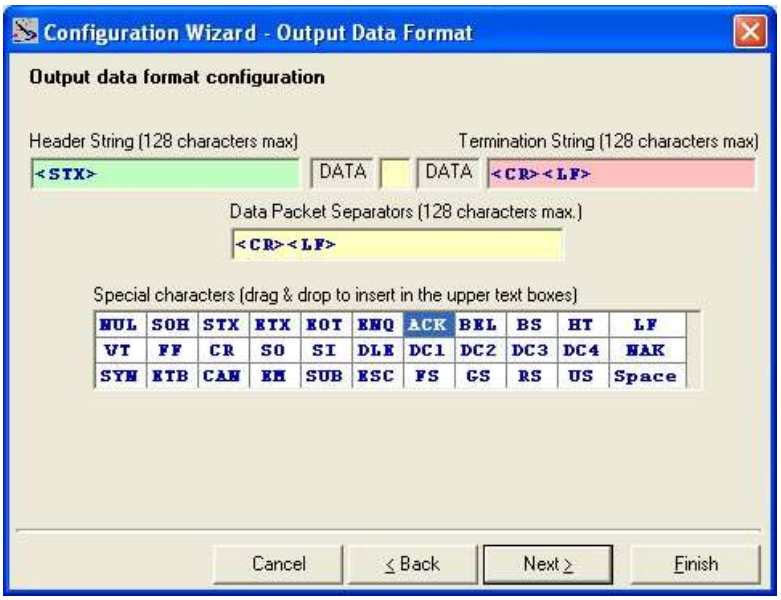

The **On Line** operating Mode requires the reader to be connected to an External Trigger/Presence Sensor using I1A and I1B inputs.

The **Automatic** operating mode does not require connection to an external Presence Sensor. When working in this mode the reader is continuously scanning, while the reading phase is activated each time a barcode enters the reader reading zone. The reader stops reading after an N number of scans without a code. Barcode characters are transmitted on the serial interface. In case of a failed reading phase no message is sent to the host computer.

2. After defining the parameter values the following window appears allowing to complete the reader configuration as follows:
   - Saving the configuration to disk;
   - Switching to Advanced mode;
   - Sending the configuration to the scanner.

3. After sending the configuration to the scanner you have completed the configuration process.

4. By clicking Finish, the System Information window will be displayed with specific information concerning the scanner.

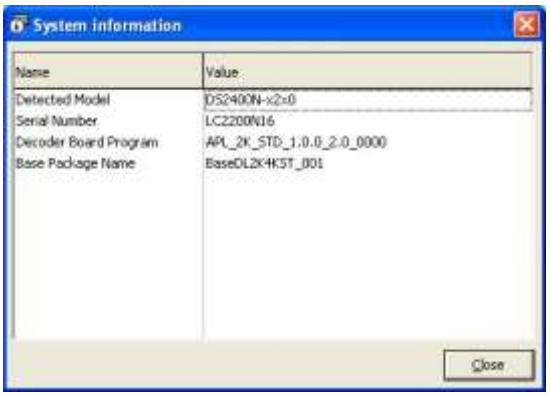

STEP 5 – TEST MODE

Use a code suitable to your application to test the system. Alternatively, you can use the Datalogic Test Chart (Code 39, Code Interleaved 2/5).

1. Enter the *Test mode* function by holding the X-PRESS™ push button pressed until the TEST LED is on.
2. Release the button to enter the *Test mode* function.
   Once entered, the Bar-Graph on the five LEDs is activated and if the scanner starts reading barcodes the Bar-Graph shows the Good Read Rate. In case of no read condition, only the STATUS LED is on and blinks.

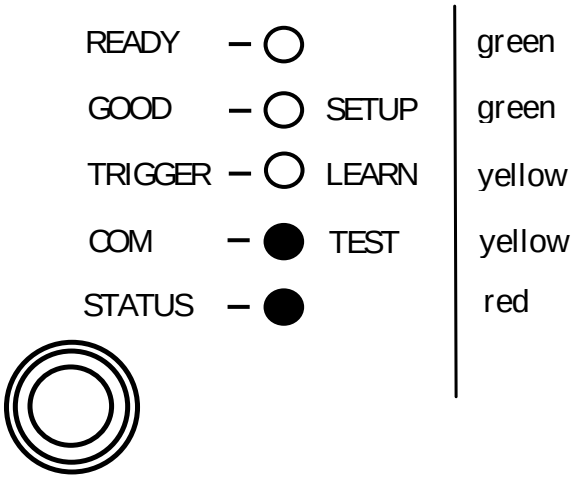

Figure 8 – X-PRESS™ Interface: Test Mode Function

3. To exit the Test Mode, press the X-PRESS™ push button once.

NOTE: By default, the Test Mode exits automatically after two minutes.

ADVANCED SCANNER CONFIGURATION

The ADVANCED selection available when starting the Genius™ program is addressed to expert users being able to complete a detailed scanner configuration. By choosing this option it is possible either to start a new scanner configuration or to open and modify an old one. The desired parameters can be defined in the following window, similar to the MS Explorer:

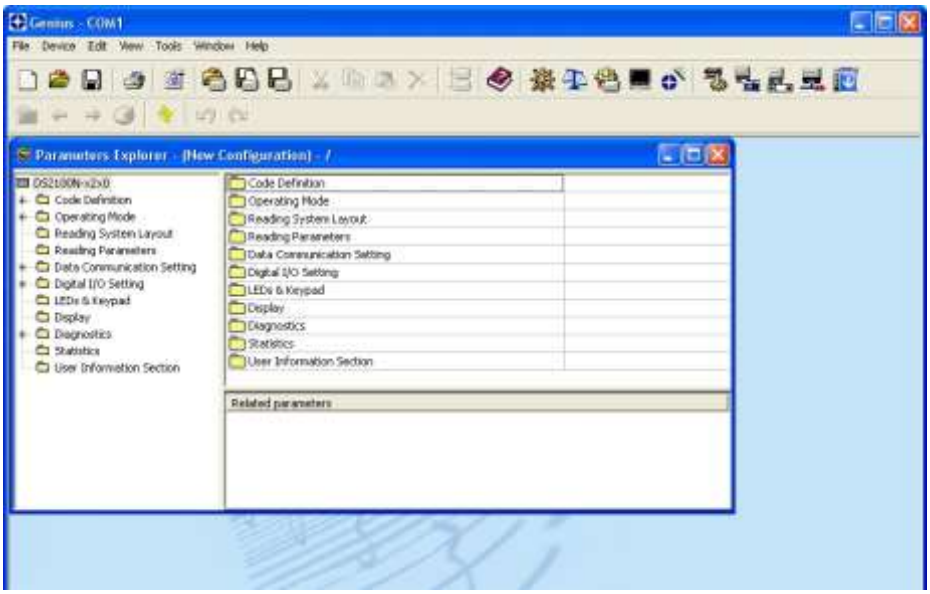

Figure 9 - Genius™ Parameter Explorer Window

Host Mode Programming

The scanner can also be configured from a host computer using the Host Mode programming procedure, by commands via the serial interface. See the Host Mode Programming file on the CD-ROM.

Alternative Layouts

- The ID-NET™ is a built-in high-speed interface dedicated for high-speed scanner interconnection. ID-NET™ is in addition to the Main and Auxiliary serial interfaces.
  If you need to install an ID-NET™ network refer to chapters 4, and 5 of this Reference Manual.

  The scanner can also be configured for alternative layouts by reading programming barcodes. See the "Setup Procedure Using Programming Barcodes" printable from the CD-ROM.
- If you need to install an Ethernet network, Fieldbus network or Pass-Through network, refer to chapters 4, and 5 of this Reference Manual.

2 INTRODUCTION

2.1 PRODUCT DESCRIPTION

The DS2100N/DS2400N laser scanner satisfies the most advanced needs of a wide range of users. It has been developed focusing on the realistic requirements of its target market. The outstanding result is an extremely compact, cost-effective and easy to use industrial scanner.

Standard Application Program	A standard application program is factory-loaded onto the scanner. This program controls barcode reading, serial port interfacing, data formatting and many other operating and control parameters. It is completely configurable from a host computer through the Genius™ utility program provided on CD with the scanner, or via the serial interface (Genius™ based Host Mode Programming).
Custom Application Programs	If the Standard Application Program does not meet your requirements, please contact your local Datalogic distributor.

Some of the main features are listed below:

- ACR-Lite (Advanced Code Reconstruction)
- small dimensions and light weight
- software programmable scanning speed on all models
- linear and raster version
- completely configurable via serial interface (Genius™)
- 3 serial communication interfaces (Main, Auxiliary, ID-NET™)
- supply voltage from 10 to 30 Vdc (24 Vdc ±10% for Subzero models)
- reads all popular codes
- test mode to verify the reading features and exact positioning of the scanner without the need for external tools
- programmable in 4 different operating modes to suit the most various barcode reading system requirements
- code verifier
- low power consumption

The scanner uses a solid-state laser diode as a light source; the light emitted has a wavelength between 630 and 680 nm. Refer to the section “Safety Precautions” at the beginning of this manual for information on laser safety.

The protection class of the enclosure is IP65, the reader is therefore suitable for industrial environments where high protection against harsh external conditions is required.

2.1.1 Indicators

The five LEDs on the side of the scanner (Figure A) indicate the following:

READY	(green)	This LED indicates the device is ready to operate. For Subzero models this LED blinks during the warm-up phase.
GOOD	(green)	This LED confirms successful reading.
TRIGGER	(yellow)	This LED indicates the status of the reading phase. *
COM	(yellow)	This LED indicates active communication on main serial port. **
STATUS	(red)	This LED indicates a NO READ result.

* In On-Line mode the TRIGGER LED corresponds to the active reading phase signaled by the Presence Sensor. In Automatic and Continuous modes the TRIGGER LED is always on indicating that the reader is ready to read a code.

** When connected to a Fieldbus network through the CBX500, the COM LED is always active, even in the absence of data transmission, because of polling activity on the Fieldbus network.

During the reader startup (reset or restart phase), all the LEDs blink for one second.

PWR (blue)	This LED indicates that the reader is connected to the power supply. (This LED is located next to the cable on Serial models).
ETH (yellow)	This LED indicates connection to the on-board Ethernet or Profinet-IO network.

2.2 ID-NET™

The ID-NET™ is a built-in high-speed interface dedicated for high-speed scanner interconnection. The ID-NET™ is in addition to the Main and Auxiliary serial interfaces.

The following network configurations are available:

- **ID-NET™ M/S Synchronized:** Single station – multiple scanners

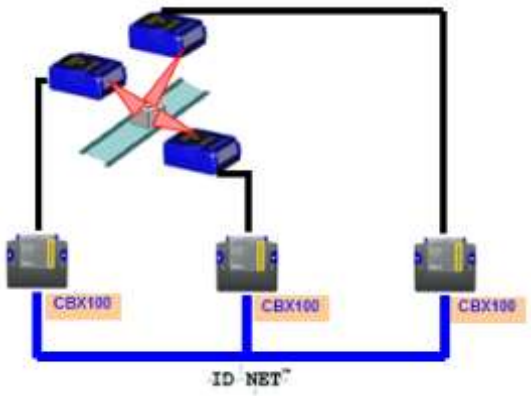

ID-NET™ interface allows local connection of multiple scanners reading different sides of the same target. All scanners share a single presence sensor and activate/deactivate simultaneously.

At the end of each reading phase a single data message is transmitted to the host.

Thanks to ID-NET™, data communication among scanners is highly efficient so that an immediate result will be available.

- **ID-NET™ M/S Multidata:** Multiple stations – single scanner

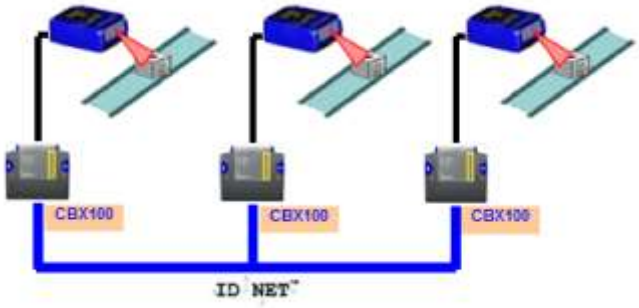

ID-NET™ interface allows connection of scanners reading objects placed on independent conveyors. All scanners are typically located far away from each other and they use a dedicated presence sensor.

At the end of each reading phase, each scanner transmits its own data message to the host. Thanks to ID-NET™, data collection among readers is accomplished at a high speed without the need of external multiplexing device. This leads to an overall cost reduction and to a simple system wiring.

2.2.1 How To Setup/Configure the Scanner Network

A complete ID-NET™ scanner network can be rapidly setup, as follows:

Mounting & Connection

1. Mechanically mount/install all the readers (refer to par. 3.2 and 3.4).
2. Wire ID-NET™ (refer to par. 4.3).
3. Connect the planned Master scanner to a PC by means of the Genius™ configuration software.
4. Power up the entire system.

Configuration

1. Launch Genius™.
2. From the Genius™ Device Menu select “Local Device Network Settings” and program the Role of the Master scanner (Synchronized or Multidata).

   This procedure requires the Network Baud Rate be the same for all Slaves and Master, (500 kbs is the default value). It can be changed after network setup using Genius™ through the Master scanner. See also the alternative procedure in the note below.
3. At the prompt to "Send updated Network configuration to the Local Device" (Master) choose "Yes".
4. Then run the NET-AUTOSET procedure from the Icon in the Devices Area. Genius™ sets all slave scanners according to the Master Role (Synchronized or Multidata), and assigns each a random address. If necessary, this address can be changed through the Network Wizard.
5. Configure the System parameters via Genius™.
6. If using the CBX connection box equipped with a BM100 Backup module, perform System Backup at the Master. See par. 2.4 of this manual or the BM100 or BM150 manuals for details.

The scanner network is ready.

NOTE: If necessary, the ID-NET™ baudrate can be set individually on each Slave scanner to match the Master. Connect each Slave to Genius™ and set the Reading System Layout > Network Baudrate parameter. Then follow the procedure above.

NOTE: An alternative method of programming scanner address and role assignment can be accomplished by using the "Connectivity Programming Barcodes" (refer to the "Setup Procedure Using Programming Barcodes" document on the product CD).

2.3 X-PRESS™ HUMAN MACHINE INTERFACE

X-PRESS™ is the intuitive Human Machine Interface designed with the precise goal of improving ease of installation and maintenance.

Status and diagnostic information are clearly presented by means of five-colored LEDs, whereas the single multi-function key gives immediate access to relevant functions:

- *Autosetup* to self-optimize reading performance in demanding applications
- *Autolearn* to self-detect unknown barcodes
- *Test Mode* with bar-graph visualization to check static reading performance

X-PRESS™ is the common interface adopted in all new products: *"You learn one, you can use them all".*

The colors and meaning of the five LEDs when in the one of the operating modes (On-Line, Automatic or Continuous) are illustrated in par 2.1.1.

NOTE: The X-PRESS™ functions do not work if the motor or laser are turned off, see chp. 8 for details.

2.3.1 Diagnostic Indication

The "STATUS" and "READY" LEDs blink simultaneously to signal the presence of a failure. Diagnostic message transmission on interfaces can be enabled to provide details about specific failure conditions.

At the same time one or more LEDs light up according to the following scheme:

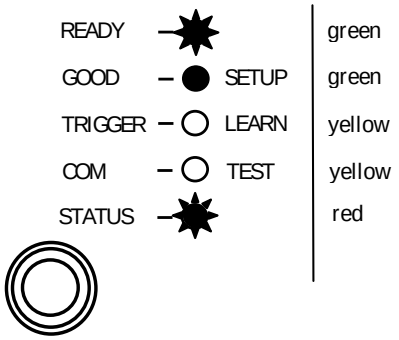

LED	STATUS
READY	BLINK
GOOD	ON to indicate any Failure different than Motor or Laser failures.
TRIGGER	ON to indicate a Motor Failure.
COM	ON to indicate a Laser Failure.
STATUS	BLINK

2.3.2 X-PRESS™ Functions

Quick access to the following functions is provided by an easy procedure using the push button:

1 – **Press** the button (the STATUS LED will give a visual feedback).

2 – **Hold** the button until the specific function LED is on (TEST, LEARN or SETUP).

3 – **Release** the button to enter the specific function.

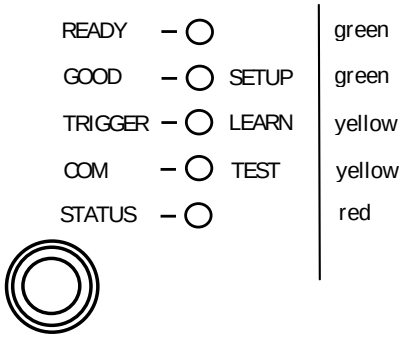

Once button is pressed, the cycle of LEDs activation is as follows:

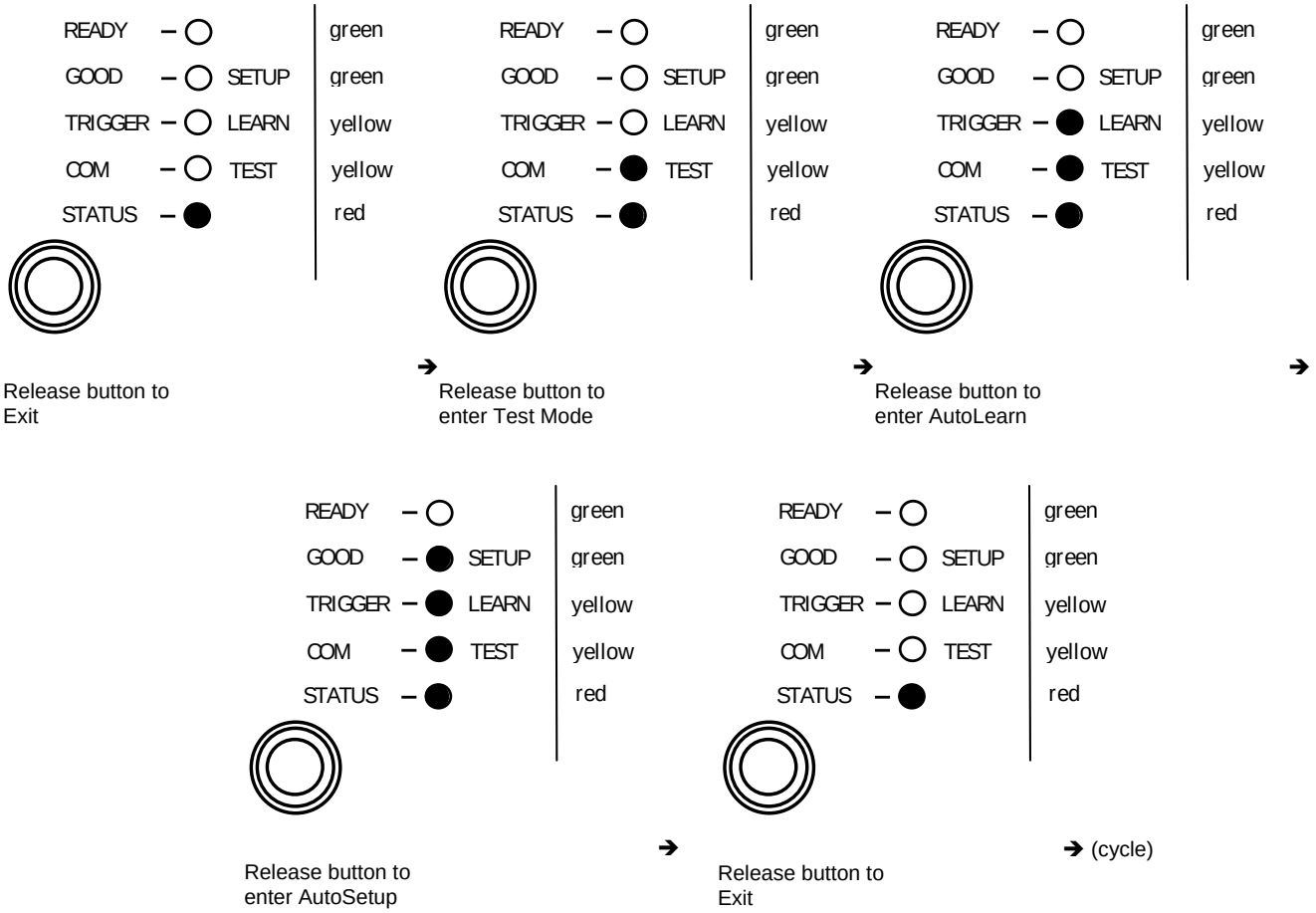

Test Mode Function

Once entered, the Bar-Graph on the five LEDs is activated and if the scanner starts reading barcodes the Bar-Graph shows the Good Read Rate. In case of no read condition, only the STATUS LED is on and blinks.

To exit the Test Mode, press the X-PRESS™ push button once.

AutoLearn Function

Once entered, the reader starts a procedure to automatically detect and recognize barcodes (by type and length), which are presented to it[1]. The laser turns on and the LEARN LED blinks to indicate the ongoing process.

The procedure is as follows:

- **place** the desired barcode on the scanline.
- **wait** until the LEARN LED stays steady on (indicating the reader has detected the barcode).
- **repeat**, if needed, the above two steps to program up to 10 different barcodes (the LEARN LED returns to the blinking state for the next code). If more than one barcode is detected in the scan line, the Multi Label mode is enabled (refer to the "*2K/4K Family Software Configuration Parameter Guide*" Help file).
- **exit** the process by pressing the X-PRESS™ push button once.

The scanner will restart at the end of the process, and then the detected barcodes are automatically configured in scanner memory.

AutoSetup Function

Once entered, if a barcode label is positioned in front of the scanline, the scanner automatically performs the optimal setup of the reading parameters for that specific barcode.

The procedure is as follows:

- **place** the desired barcode on the scanline.
- **enter** the *AutoSetup* function (the laser turns on and the SETUP LED blinks to indicate the ongoing process).
- **wait** until the SETUP LED stays steady on (indicating the reader has detected the barcode).

This procedure ends either when the barcode is successfully decoded or after a timeout of about 7 (seven) seconds.

The scanner will restart at the end of the process, and then the optimized reading parameters for that barcode are automatically configured in scanner memory.

NOTE: The AutoSetup function does not modify the programmed barcode symbologies. If needed, the AutoLearn function can be performed after Autosetup.

[1] In case of Programming Barcodes, refer to the "Setup Procedure Using Programming Barcodes" document in the product CD.

Reset Scanner to Factory Default

If it ever becomes necessary to reset the scanner to the factory default values, you can perform this procedure by holding the X-PRESS™ push button pressed while powering up the scanner. At the end of the procedure (about 5-6 seconds), the Configuration and Environmental parameters are reset, all LEDs blink simultaneously 3 times and the message "Default Set" is shown on the display.

2.4 EXTERNAL MEMORY BACKUP & RESTORE

By selecting "External Memory Backup & Restore" from the Device menu, the following dialog box appears allowing Complete Configuration and Environmental parameter storage for network and reading devices.

Backup & Restore can be applied to any connected device through which backup memory is available, regardless of the devices' network configuration.

Backup & Restore automatically checks whether a previous backup or configuration is already stored in backup memory for each device, speeding up the procedure and making it more secure.

The Backup & Restore function is supported by DS2100N, DS2400N, DS4800 when connected to or through:

- CBX + BM100 and/or BM2x0
- QL500 (Ethernet TCP/IP)
- SC4000 ID-NET Controller
- QLM-Series Gateways

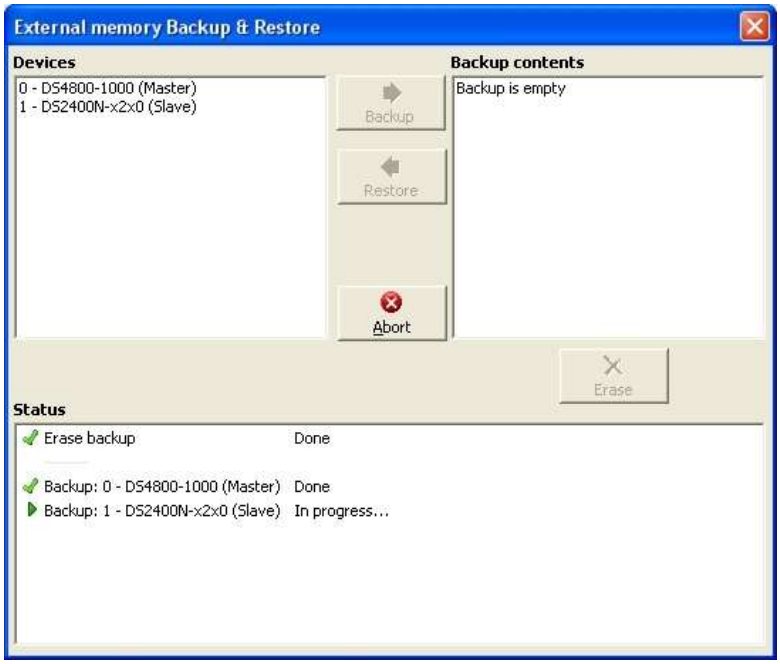

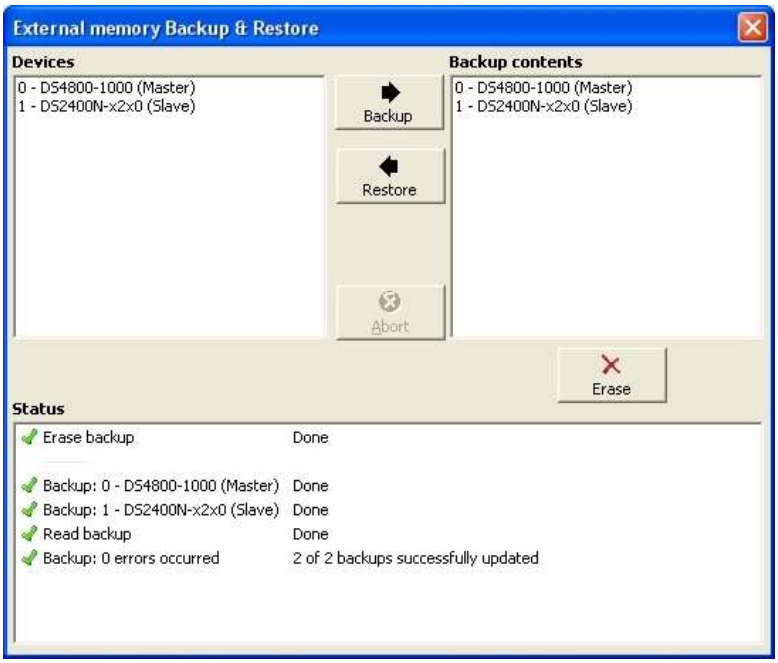

NOTE:

- Before executing a Backup on a BM100 backup module make sure the Write Protection switch is set to Unlocked.
- If BM100 and BM2x0 are both installed B&R is automatically performed only on the BM100 module.
- BM2x0 can execute B&R only with Network up and running (network cable connected).
- QL500 can backup up to 10 nodes (Master + 9 slaves).

In the pictures above the Backup/Restore Dialog is shown:
the **Devices** window lists all of the available devices in the current configuration,
the **Backup Contents** window lists any previous device backups.

To perform a **Backup**:

1. Press the Backup button (you will be warned that all previous backups will be overwritten)
2. The Status window shows information as the backup procedure is being executed

To perform a **Restore**:

1. Press the Restore button (you will be warned that all scanner configurations will be overwritten)
2. The Status window shows information as the restore procedure is being executed

The **Restore** function also provides easy and secure Single Device Replacement:

1. Remove the scanner to be replaced

2. Connect the new scanner (make sure the new scanner has been previously set to default)
3. Run the Restore procedure by pressing the Restore Button (see: Restore procedure)

NOTE: If the Automatic Scanner Replacement parameter is enabled the Restore procedure starts automatically when the new scanner is recognized.

To **Erase** any previous Backup:

1. Press the Erase button
2. All backups are deleted

The **Status** window shows the status of the backup procedure as it is being executed.

The following is a list of possible error messages:

Module not present: backup module not mounted (BM100) or not ready (QL500 , BM2x0, SC4000, QLMxxx), or Search for Backup Memory at Device Startup parameter disabled

Unable to Read Backup State: Genius is unable to get connected to the device

Backup function not allowed: when device is in X-PRESS™ Menu mode (BM100) or is out of memory (QL500)

Failed! (Device not found): Master is unable to reach the addressed device

Failed! (Module is write protected): BM100 Write Protection switch is set to Locked

2.5 AUTOMATIC SCANNER REPLACEMENT

This parameter allows single scanner replacement to take place automatically (at power on time only) whenever a scanner substitution is made. Data for the Automatic Scanner Replacement are stored in the backup memory [BM100 Backup Module or QLMxxx Gateway]. To correctly activate the Automatic Scanner Replacement feature follow these steps:

Master/Slave Configuration:

1. Connect to the Master and properly configure all of the scanners in your system according to your application needs.
2. Enable the Automatic Scanner Replacement parameter on the Master, then Send the configuration to the Master.
3. Backup the complete network configuration by selecting Backup & Restore in the Device drop-down list from the Genius™ menu.
4. Get the Masters' configuration and verify that the Automatic Scanner Replacement parameter is enabled.

The Automatic Scanner Replacement is now enabled. If any network scanner (Master or Slave) is ever replaced by a new one (which must be set to the Default Configuration or have the proper node address) the Automatic Scanner Replacement feature will be performed.

Other Configuration:

1. Connect to the scanner and properly configure it according to your application needs.
2. Enable the Automatic Scanner Replacement parameter, then Send the configuration to the scanner.
3. Backup the configuration by selecting Backup & Restore in the Device drop-down list from the Genius™ menu.
4. Get the configuration and verify that the Automatic Scanner Replacement parameter is enabled.

The Automatic Scanner Replacement is now enabled. If the scanner is ever replaced by a new one (which must be set to the Default Configuration), the Automatic Scanner Replacement feature will be performed.

NOTE 1: The Automatic Scanner Replacement feature can only be performed at power up (either Master or Other: Stand Alone) and only one scanner at a time can be replaced.

NOTE 2: Once the Automatic Scanner Replacement has been activated, the Restore feature is also available.

NOTE 3: Once the Automatic Scanner Replacement has been activated, it will be forced if a "Reset Scanner to Factory Default" procedure is performed (by pressing and holding the X-PRESS™ button at power-up).

NOTE 4: Once the Automatic Scanner Replacement has been activated, it can be disabled only by Erasing the Backup content from the backup memory or by backing up a configuration once the Automatic Scanner Replacement parameter has been disabled.

2.6 SUBZERO™ TEMPERATURE MODELS

The DS2400N Subzero scanner is an industrial scanner designed to operate in industrial refrigerator/freezer cells or other stable subzero degree environments, which are below the operating range of standard industrial scanners. It is not designed to move between subzero and normal environments (rapid temperature changes).

The DS2400N Subzero has an intelligent microprocessor-driven and efficient internal heating system which constantly monitors and automatically controls internal temperature. Only the necessary temperature-sensitive components are heated, resulting in an efficient heating system which has very low power consumption.

Upon power-up in a subzero environment, the scanner waits until these internal components are heated to within their operating temperature range. Power-up at -35 °C can take about 20 minutes before the scanner is ready to read barcodes. During this time the laser and motor remain off and the Ready LED blinks, indicating the warm-up phase. While in the warm-up phase, scanner communication is operative and the device can be configured through Genius™ or through Host Mode Programming.

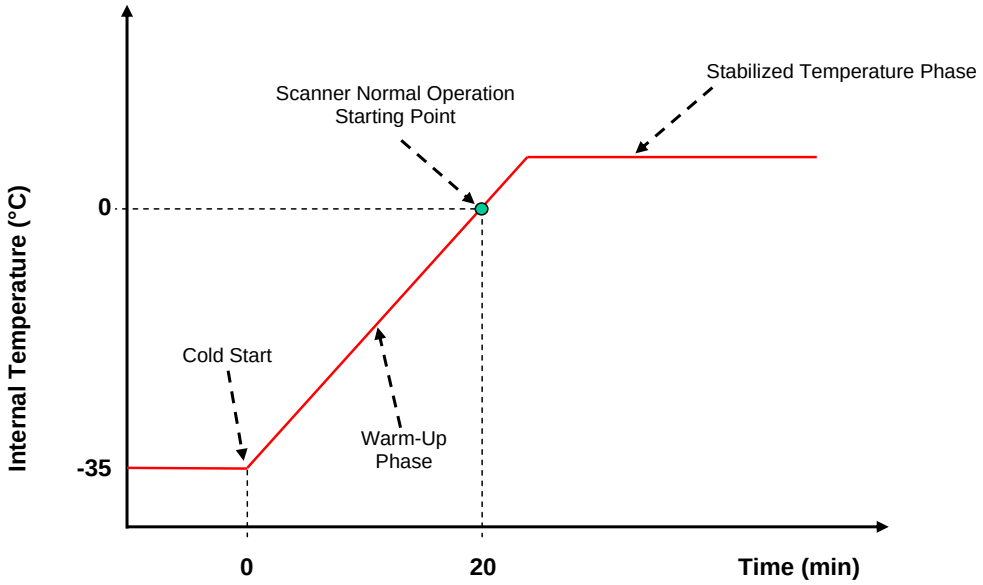

The DS2400N Subzero can be connected to the CBX100 LT Subzero connection box which can withstand the same low temperature environment as the scanner. A CBX100 LT all-in-one model includes a BM100 backup and restore module having an extended temperature range also for use in subzero environments.

2.7 IP ADDRESS ALIGNMENT USING GENIUS™ DISCOVERY

For Bulit-in Ethernet and Profinet-IO models, the scanner IP address can automatically be found on the Ethernet network by using the Genius™ Discovery utility available in the Options>Communications tab.

NOTE: This feature only works for the **built-in** interfaces: Ethernet or Profinet-IO.

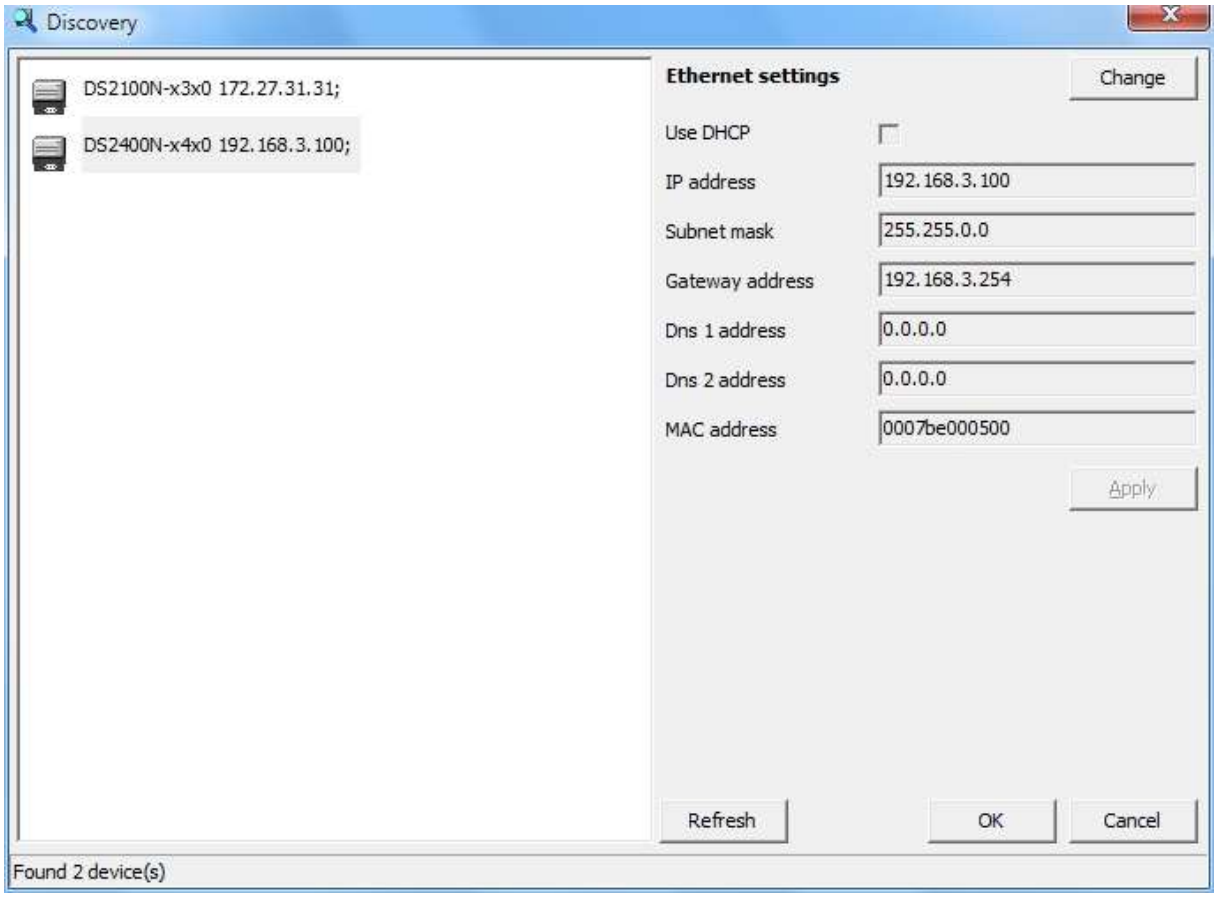

Discovery Procedure:

1. Select the desired device by comparing the MAC address field with the label on the device.
2. Click the Change button to assign the desired IP address.

NOTE: It is advised to use an assigned static IP address instead of DHCP.

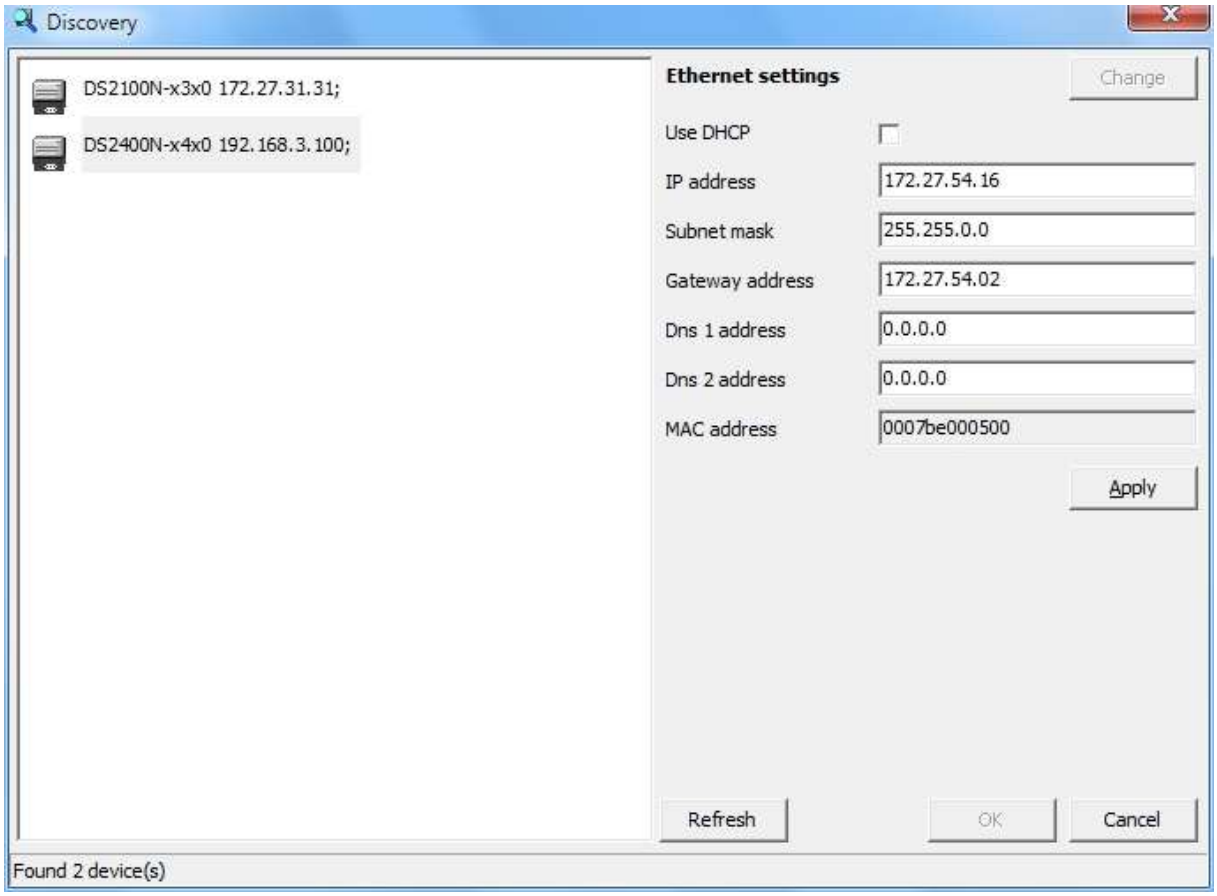

3. Click the Apply button. The following message is displayed because Genius can no longer communicate with the new address. Click OK.

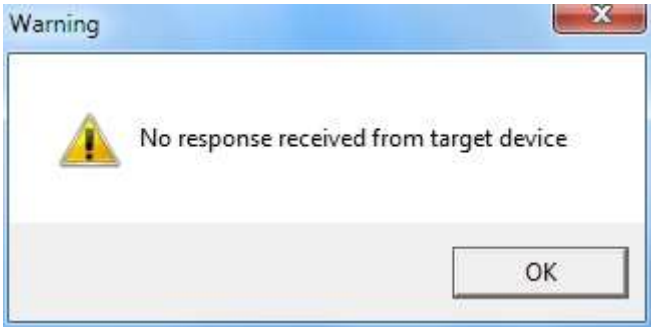

4. Click the Refresh button. You should now see the device displayed with the newly assigned IP address. Click OK to return to the Communications folder.

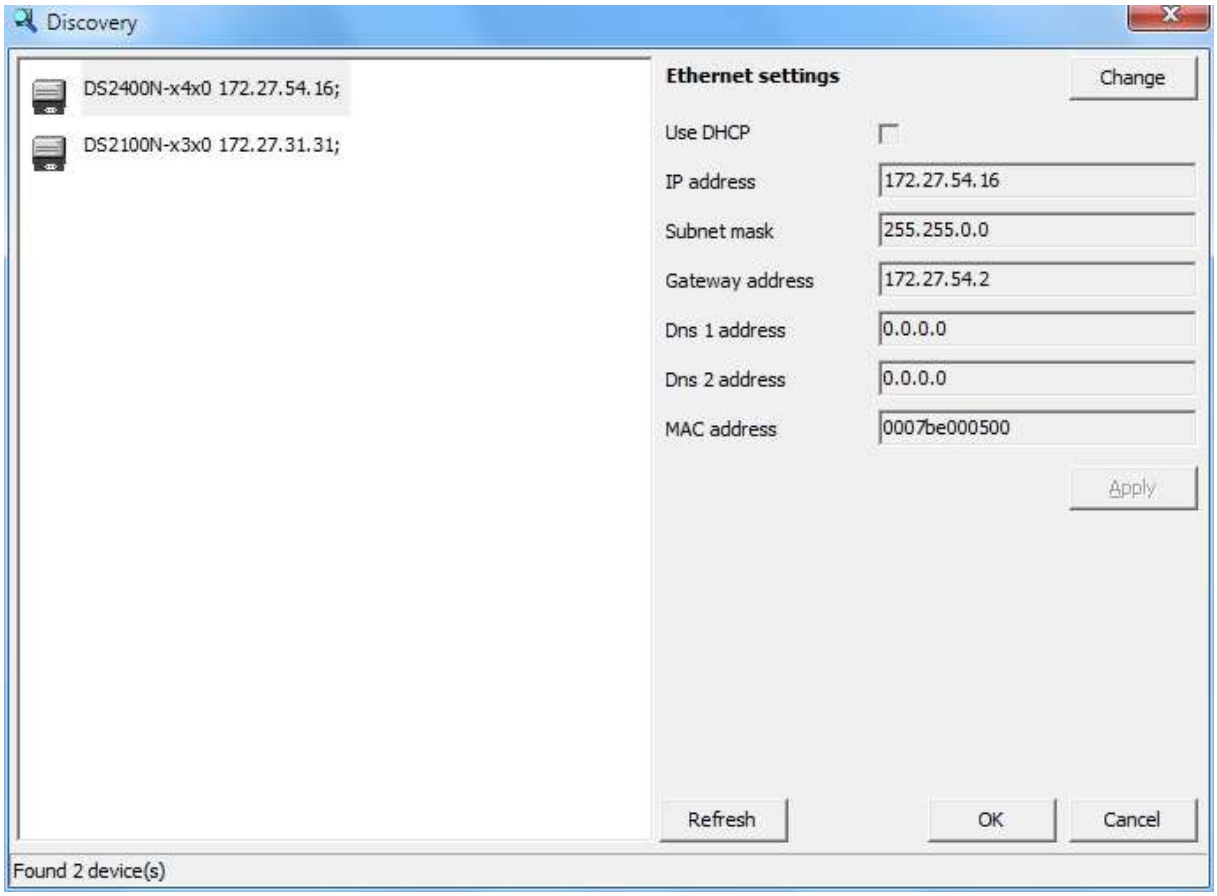

5. Click OK to return to Genius™ and perform a Device>Get to connect to the device.

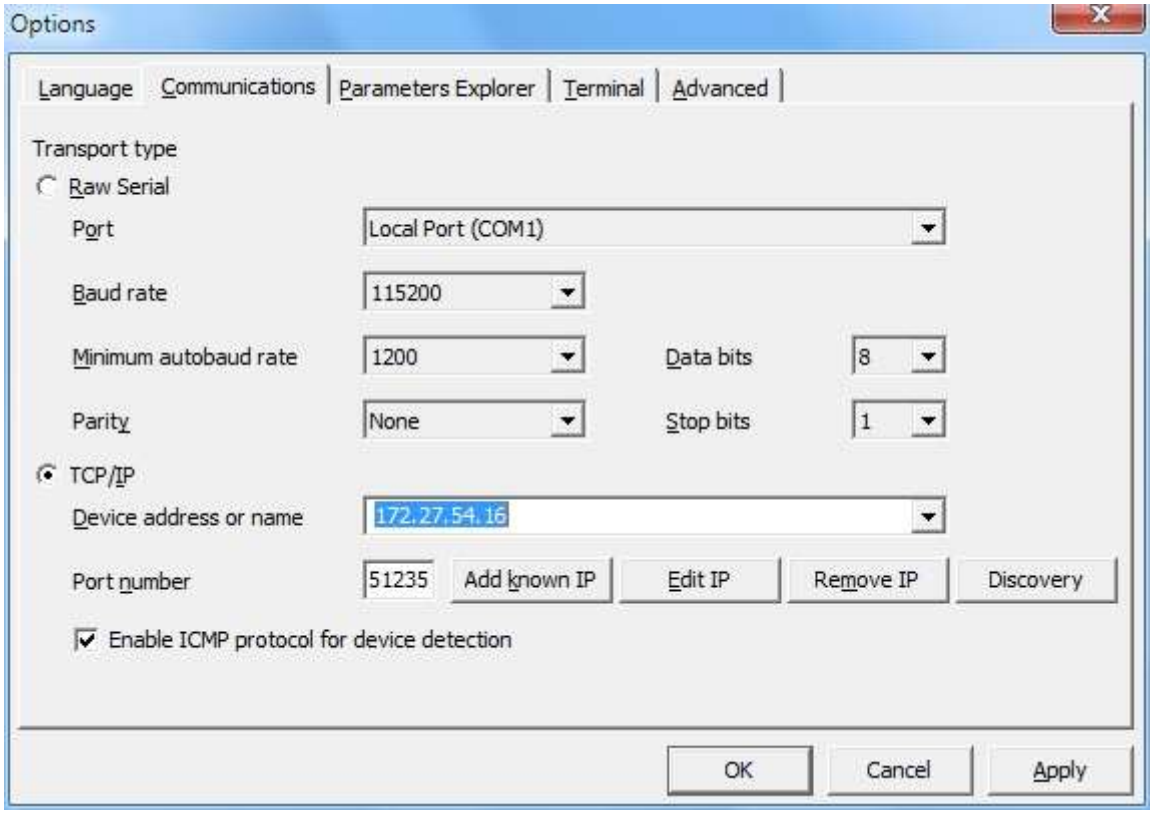

2.8 MODEL DESCRIPTIONS

2.8.1 DS2100N Models

DS2100N scanners are described by their model number which indicates the characteristics listed in the diagram below. Not all combinations are available. For a complete list of combinations see the Models tab on the Product page of the website.

- Resolution
- Performance
- Linear or raster reading

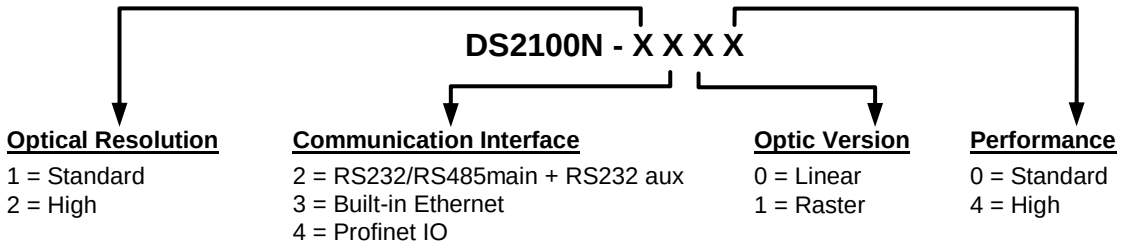

The following tables display each version's reading performance.

Version	Max Code Resolution	Speed
	mm (mils)	scans/s
1xx0	0.20 (8)	500 to 800
1xx4	0.15 (6)	800 to 1000
2xx0	0.15 (6)	500 to 800
2xx4	0.12 (5)	800 to 1000

Version	Reading Distance
1xx0	40 mm (1.6 in) - 300 mm (11.8 in) on 0.50mm (20 mils) codes
1XX4	50 mm (1.8 in) - 310 mm (11.8 in) on 0.50 mm (20 mils) codes
2xx0	30 mm (1.2 in) - 90 mm (3.5 in) on 0.30 mm (12 mils) codes
2xx4	45 mm (1.8) – 100 mm (3.9 in) on 0.20 mm (8 mils) codes

See reading diagrams in par. 6.4 for further details.

2.8.2 DS2400N Models

DS2400N scanners are described by their model number which indicates the characteristics listed in the diagram below. Not all combinations are available. For a complete list of combinations see the Models tab on the Product page of the website.

- Resolution
- Performance
- Linear or raster reading
- Special Features

DS2400N - X X X X

Reading Range	Communication Interface	Optic Version	Special Features
0 = Short	2 = RS232/RS485main + RS232 aux	0 = Linear	0 = Standard
1 = Medium	3 = Built – in Ethernet	1 = Raster	5 = Heater (Subzero Temp)
2 = Long	4 = Profinet IO		

The following tables display each version's reading performance.

Version	Max Code Resolution	Speed
	mm (mils)	scans/s
0XXX	0.20 (8)	600 to 1000
1XXX	0.25 (10)	600 to 1000
2XXX	0.35 (14)	600 to 1000

Version	Reading Distance
0XXX	75 mm (3 in) - 340 mm (13.4 in) on 0.35 mm (14 mils) codes
1XXX	100 mm (3.9 in) - 440 mm (17.3 in) on 0.50 mm (20 mils) codes
2XXX	190 mm (7.5 in) - 600 mm (23.6 in) on 0.50 mm (20 mils) codes

See reading diagrams in par. 6.4 for further details.

2.9 ACCESSORIES

The following accessories are available on request for the DS2100N/DS2400N scanner:

Name	Description	Part Number
Mirrors		
GFC-200	85° Contact Reading Mirror	93A201108
GFC-2100	2KN 90° Lateral Output Window	93A201000
GFC-2020	2KN 102° Lateral Output Mirror	93ACC1871
OM2000N	Oscillating Mirror	93ACC1783
Connection Boxes		
CBX100	Compact Connection Box	93A301067
CBX100 All-In-One	Compact Connection Box + BM100	93A301076
CBX100 LT	Compact Connection Box Subzero	93A301069
CBX100 LT All-In-One	Compact Connection Box Subzero + BM100	93A301085
CBX500	Modular Connection Box	93A301068
BM100	Backup Module	93ACC1808
BM150	Display Module	93ACC1809
BM200/210	Ethernet TCP/IP Module STD/IP65	93ACC1851, 93ACC1852
BM300/310	Profibus Module STD/IP65	93ACC1810, 93ACC1811
BM400	DeviceNet Module IP65	93ACC1814
BM500/510/520	Ethernet/IP Module STD/IP65/IP54	93ACC1812, 93ACC1813, 93ACC1840
BM600	CANopen Module STD	93ACC1815
BM700/710	Profinet Module STD/IP65	93ACC1816, 93ACC1886
BM1100	CC-Link Module STD	93ACC1845
BM1200/1210	Modbus TCP	93ACC1848, 93ACC1849
BA100	DIN Rail Adapters	93ACC1821
BA200	Bosch Adapters	93ACC1822
BA900	Two Cable Glands Panel	93ACC1847
QL100	Quick Link Slave ID-NET T-Connector	93ACC1860
QL150	Quick Link Slave ID-NET + Service T-Connector	93ACC1868
QL200	Quick Link Slave ID-NET + Power T-Connector	93ACC1861
QL300	Quick Link Master ID-NET Serial Host Connector	93ACC1862
QL500	Quick Link Master ID-NET Ethernet Host Connector (includes Ethernet/IP explicit messaging)	93ACC1864
QLM500	Quick Link Metal Master ID-NET - EthernNet/IP Gateway	93ACC0037
QLM600	Quick Link Metal Master ID-NET - Profibus Gateway	93ACC0033
QLM700	Quick Link Metal Master ID-NET - Profinet I/O Gateway	93ACC0038
Cables		
CAB-DS01-S	M12-IP67 Cable To CBX or QL (1M)	93A050058
CAB-DS03-S	M12-IP67 Cable To CBX or QL (3M)	93A050059
CAB-DS05-S	M12-IP67 Cable To CBX or QL (5M)	93A050060
CAB-ETH-M01	M12-RJ45 IP67 Ethernet Cable (1M)	93A051346
CAB-ETH-M03	M12-RJ45 IP67 Ethernet Cable (3M)	93A051347
CAB-ETH-M05	M12-RJ45 IP67 Ethernet Cable (5M)	93A051348
CBL-1534.02	Adapter Cable Ethernet M12 to RJ45	93A050057
ETH CABLE M12-M12 1M	M12-M12 Ethernet Cable (1M) for Profinet models	93A050065
ETH CABLE M12-M12 3M	M12-M12 Ethernet Cable (3M) for Profinet models	93A050066
ETH CABLE M12-M12 5M	M12-M12 Ethernet Cable (5M) for Profinet models	93A050067
CS-A1-02-G-03	M12 4PF-Wires Power Cable (3M) for Profinet models	95A251380
CS-A1-02-O-10	M12 4PF-Wires Power Cable (10M) for Profinet models	95A251090
AS-I Power Backbone	PWR Cable, AS-I, 2 Wires, 10M	93ACC0081
AS-I Power Backbone	PWR Cable, AS-I, 2 Wires, 25M	93ACC0082
AS-I Power Branch	PWR Cable M12- ASI standard-1M	93ACC0067
AS-I Power Branch	PWR Cable M12- ASI standard-2M	93ACC0068

Name	Description	Part Number
Sensors		
MEP-593	Photocell Kit - PNP (PH-1)	93ACC1791
MEP-543	Photocell Kit - NPN	93ACC1728
Power Supplies		
PG-6000	24 V Power Supply Unit EU (for Serial and Ethernet models – connects to CBX)	93ACC1720
PG-6001	24 V Power Supply Unit UK (for Serial and Ethernet models – connects to CBX)	93ACC1719
PG-6002	24 V Power Supply Unit US (for Serial and Ethernet models – connects to CBX)	93ACC1718
PG-100-K01	POWER SUPPLY 60W KIT EU with M12 connector (for Profinet models)	93ACC0059
PG-100-K02	POWER SUPPLY 60W KIT UK with M12 connector (for Profinet models)	93ACC0060
PG-100-K03	POWER SUPPLY 60W KIT US with M12 connector (for Profinet models)	93ACC0058

Accessories valid for DS2400N Subzero models.

3 MECHANICAL INSTALLATION

3.1 PACKAGE CONTENTS

Verify that the reader and all the parts supplied with the equipment are present and intact when opening the packaging; the list of parts includes:

- Reader (with cable for Serial models)
- Compact Scanner Family Quick Reference Guide
- Barcode Test Chart
- Replicate serial number labels
- Mounting Kit: - bracket
  - screws

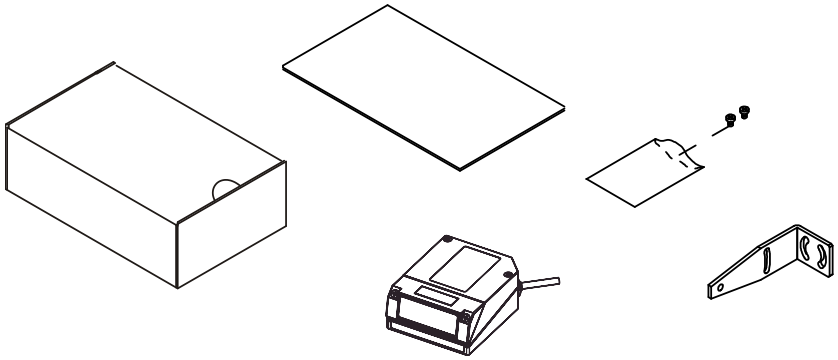

Figure 10- Package Contents

NOTE: The replicate serial number labels are for external reference and can be applied to the reading station and/or to the OM2000N accessory when used.

3.2 OVERALL DIMENSIONS

The scanner can be installed to operate in different positions. The four screw holes (M4 x 5) on the body of the reader are for mechanical fixture (Figure A, 3). The diagrams below give the overall dimensions of the scanner and mounting bracket and may be used for installation. Refer to par. 3.2.1 and 3.3.4 for correct positioning.

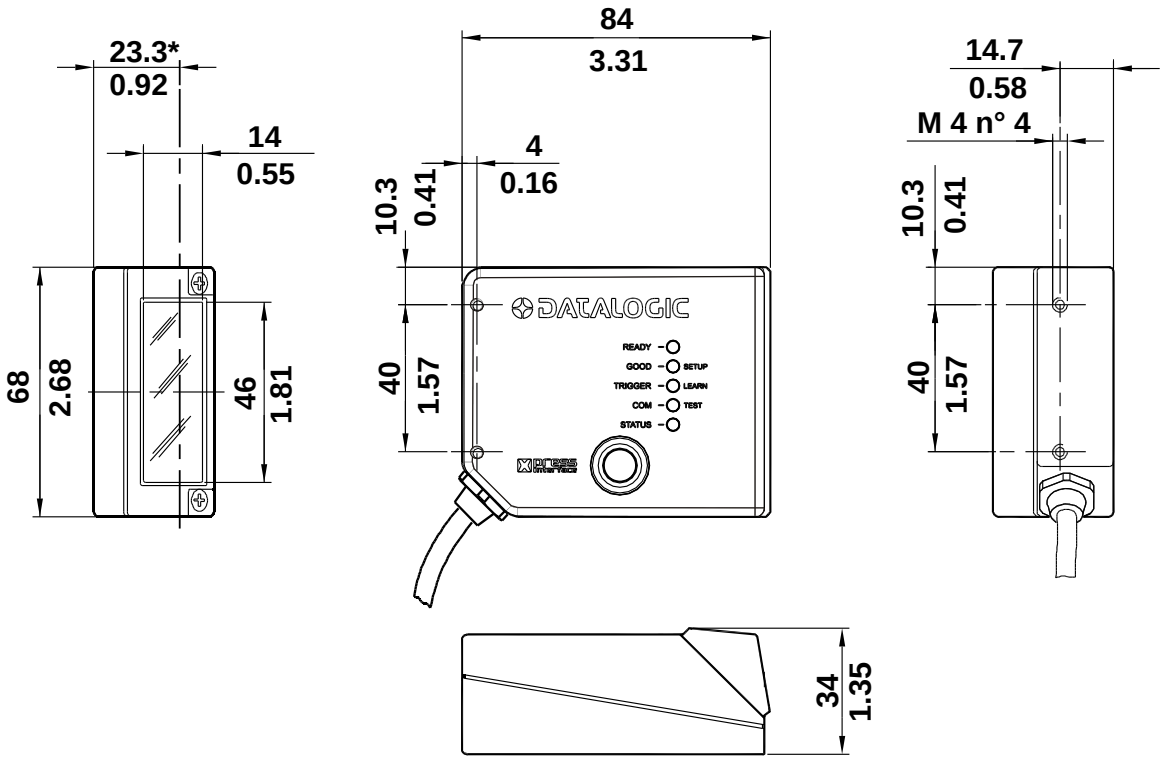

* The quote refers to the scan line

Figure 11 – x2xx Models Overall Dimensions

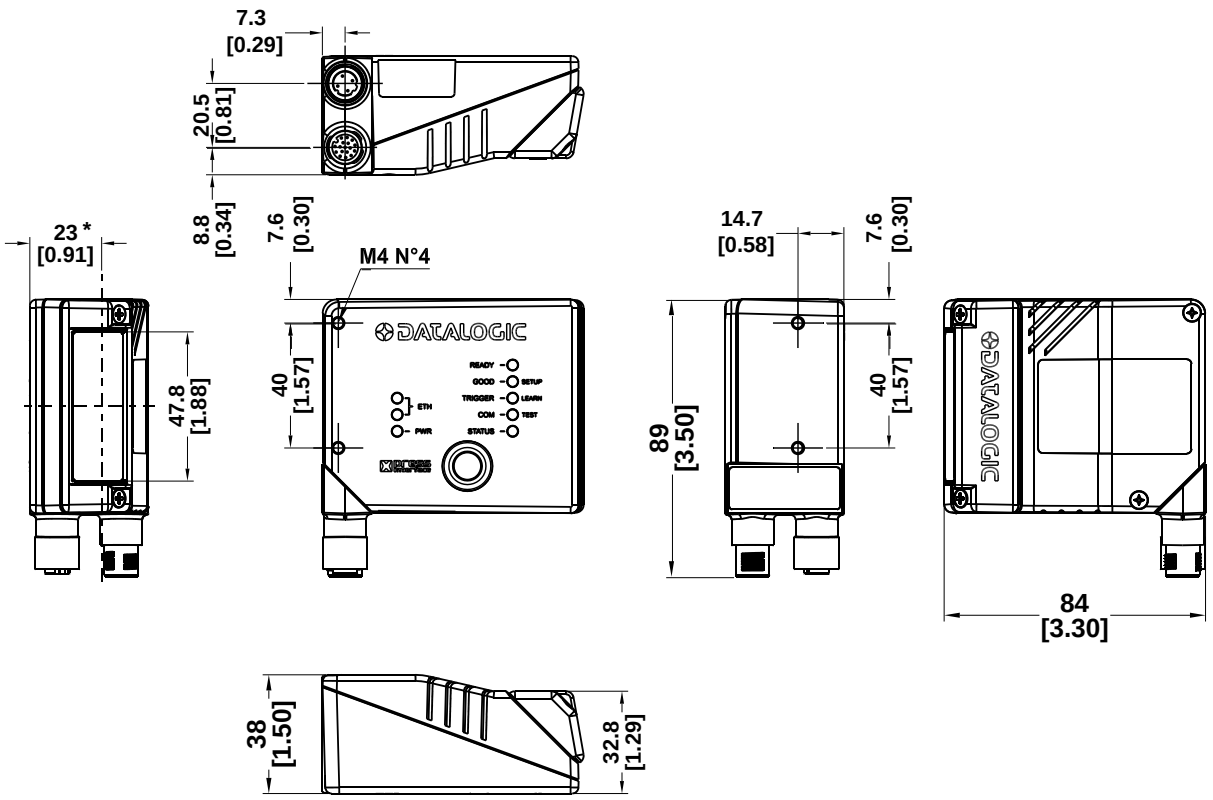

* The quote refers to the scan line

Figure 12 – x3xx Models Overall Dimensions with Connectors at 90°

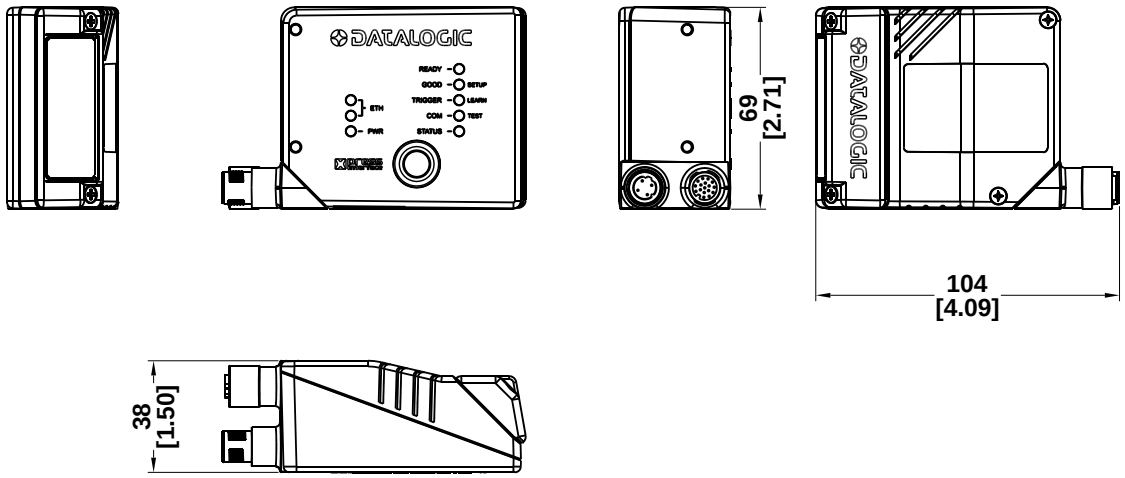

Figure 13 – x3xx Models Overall Dimensions with Connectors at 0°

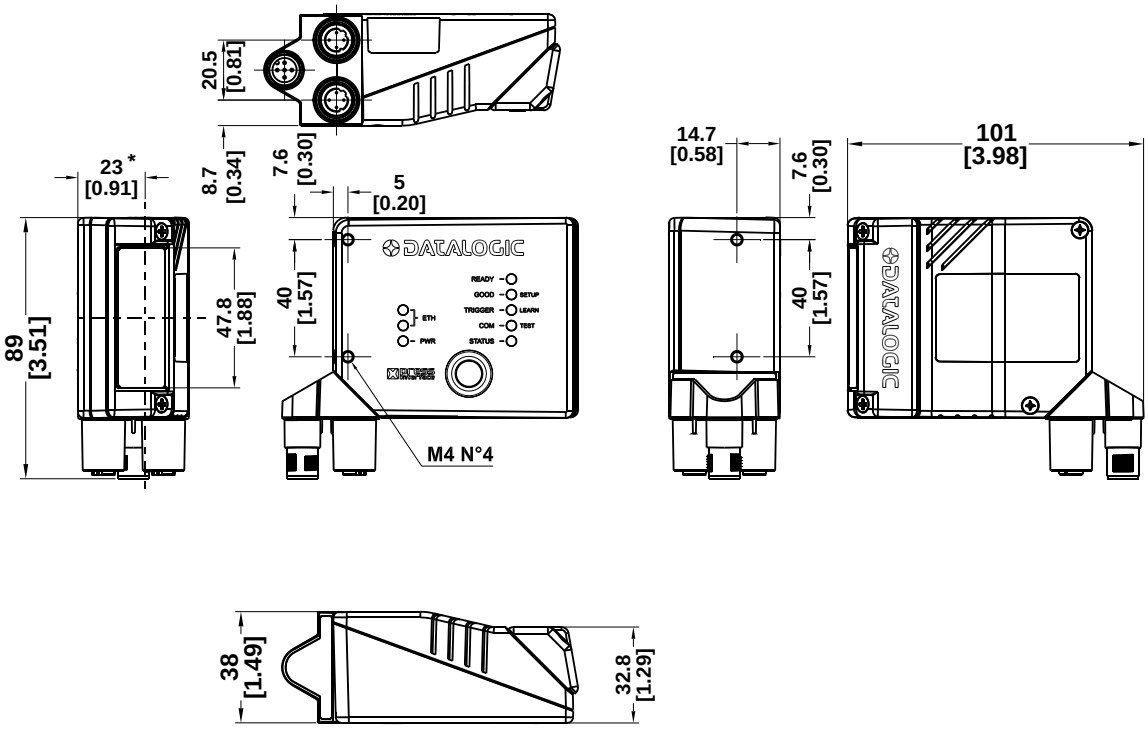

* The quote refers to the scan line

Figure 14 – x4xx Models Overall Dimensions with Connectors at 90°

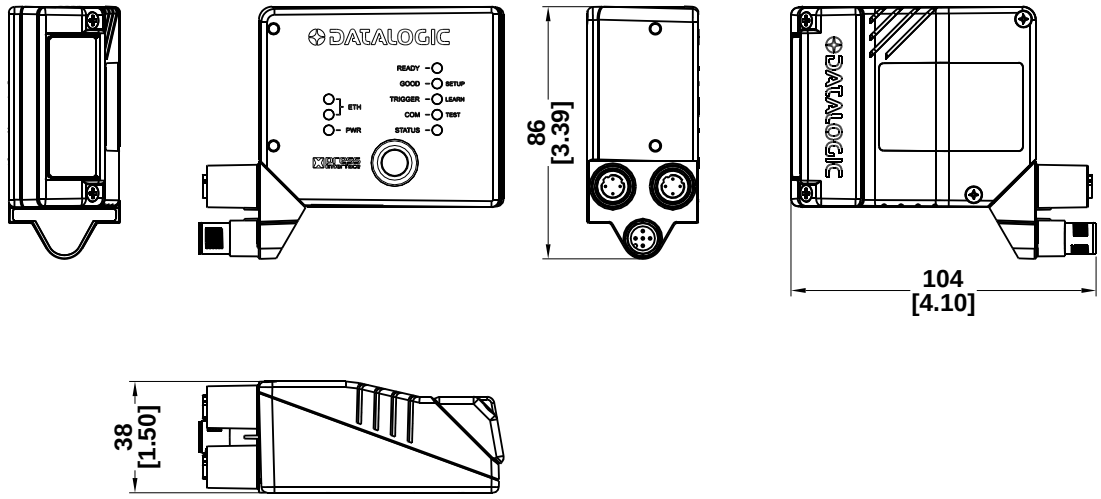

Figure 15 – x4xx Models Overall Dimensions with Connectors at 0°

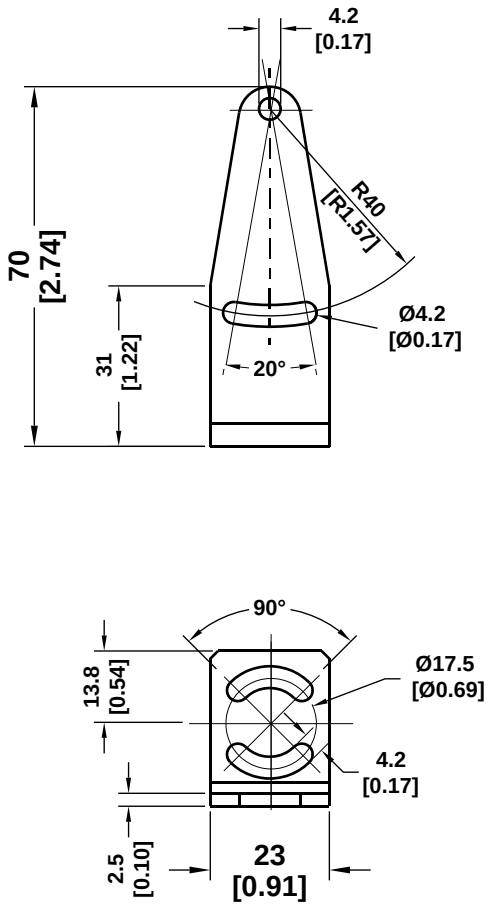

Figure 16 – Mounting Bracket Overall Dimensions

3.2.1 Mounting the Scanner

Using the scanner mounting bracket you can obtain the most suitable position for the reader as shown in the figure below:

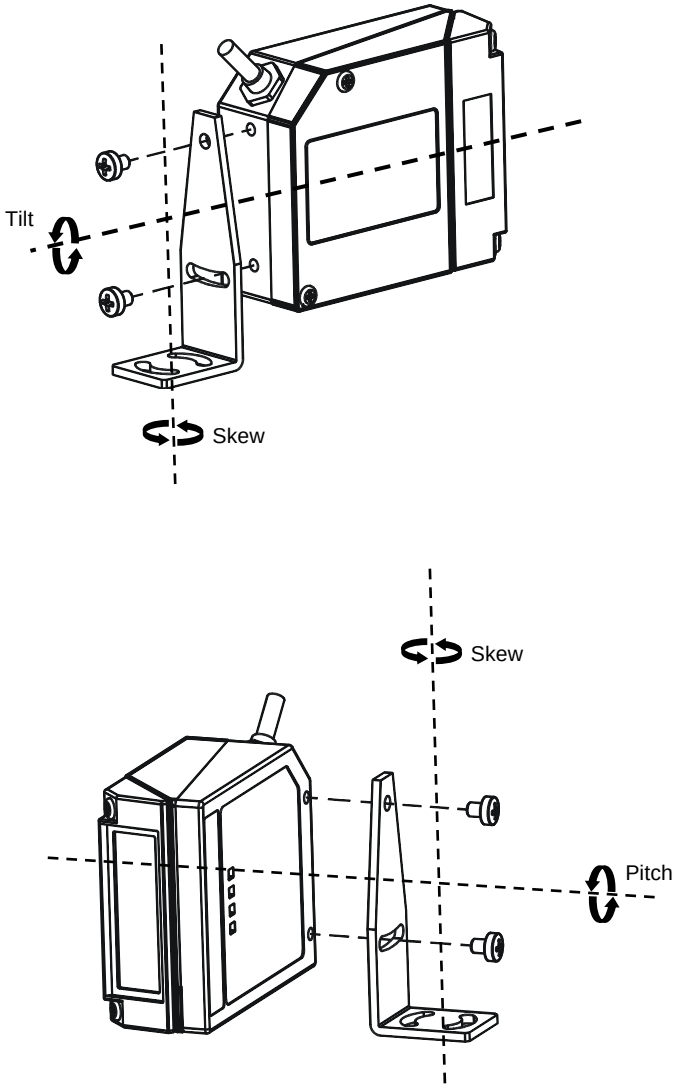

Figure 17 – Positioning with Mounting Bracket

3.3 MOUNTING SCANNER ACCESSORIES

3.3.1 Mounting a GFC-2020 Accessory Lateral Output Deflection Mirror

The GFC-2020 accessory is a Lateral Output deflection mirror which helps to position the scanner body in a different orientation with respect to the code, for limited space applications.

CAUTION: Subzero model scanners must not be opened in an uncontrolled environment.

The installation of the deflection mirror is very easy.

1. Make sure the device is not powered.
2. Remove the original 0° scanning window from the scanner by unscrewing the two cover screws.

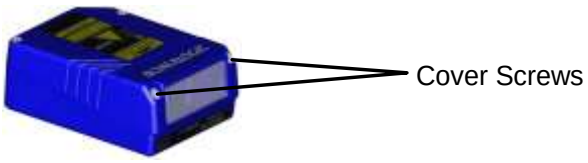

Figure 18 - Removing the 0° Scanning Window

CAUTION: Avoid any contact with the deflection mirror, mirrored rotor, the lenses or other optical components; otherwise the performance of the reader will be reduced.

3. Clean the mirror surface and reading window with a clean soft cloth and alcohol before closing the scanner.
4. **Mount the GFC-2020 accessory** so that the opening face is at 90° with respect to the scanner body. Tighten the two cover screws.

Figure 19 - Mounting a GFC-2020 Deflection Mirror

The reading position with respect to the scanner is shown below.

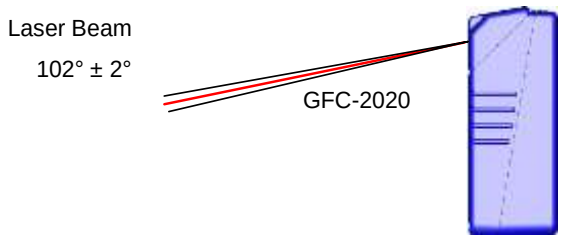

Figure 20 - GFC-2020 Laser Beam Output Position

3.3.2 Mounting a GFC-2100 Accessory Lateral Output Deflection Mirror

The GFC-2100 accessory is a 90° Lateral Output deflection mirror which helps to position the scanner body in a different orientation with respect to the code, for limited space applications.

The following items in the kit are used for mounting:

- Deflection Mirror bag 1
- Fixing Screws in bag 2 (silver self-threading)
- 90° Scanning Window in bag 2

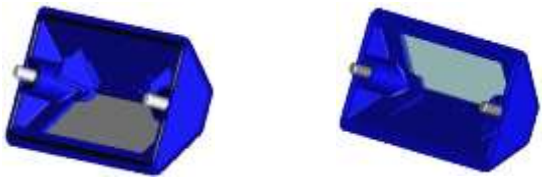

0° Scanning Window (original scanner part) **90° Scanning Window**

Figure 21 - 0° vs 90° Scanning Windows

1. Make sure the device is not powered.
2. Remove the original 0° scanning window from the scanner by unscrewing the two cover screws.

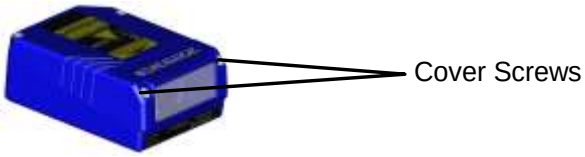

Figure 22 - Removing the 0° Scanning Window

CAUTION: Avoid any contact with the deflection mirror, mirrored rotor, the lenses or other optical components; otherwise the performance of the reader will be reduced.

3. Fix the mirror (from bag 1) to the device by means of the two fixing screws **(from bag 2)**.
4. Clean the mirror surface and reading window with a clean soft cloth and alcohol before closing the scanner.

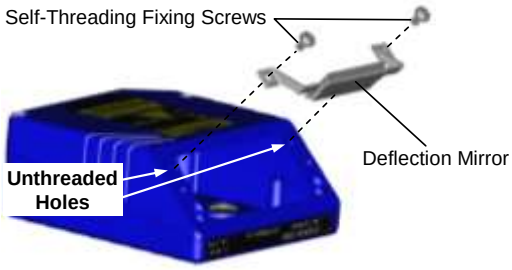

Figure 23 - Mounting Deflection Mirror

5. **Mount the 90° scanning window (from bag 2)** so that the opening face is now at 90° with respect to the scanner body. Tighten the two cover screws.

Figure 24 - Mounting 90° Scanning Window

The reading position with respect to the scanner is shown here.

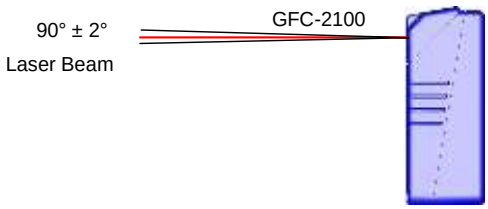

Figure 25 - GFC-2100 Laser Beam Output Position

3.3.3 Mounting a GFC-200 Accessory Contact Reading Mirror

The GFC-200 is an 85° contact reading mirror that is mounted directly to the Scanner. The GFC-200 allows contact reading, eliminating the external optical path.

Figure 26 - GFC-200 General View

The overall dimensions are provided in the figure below and can be used for proper installation.

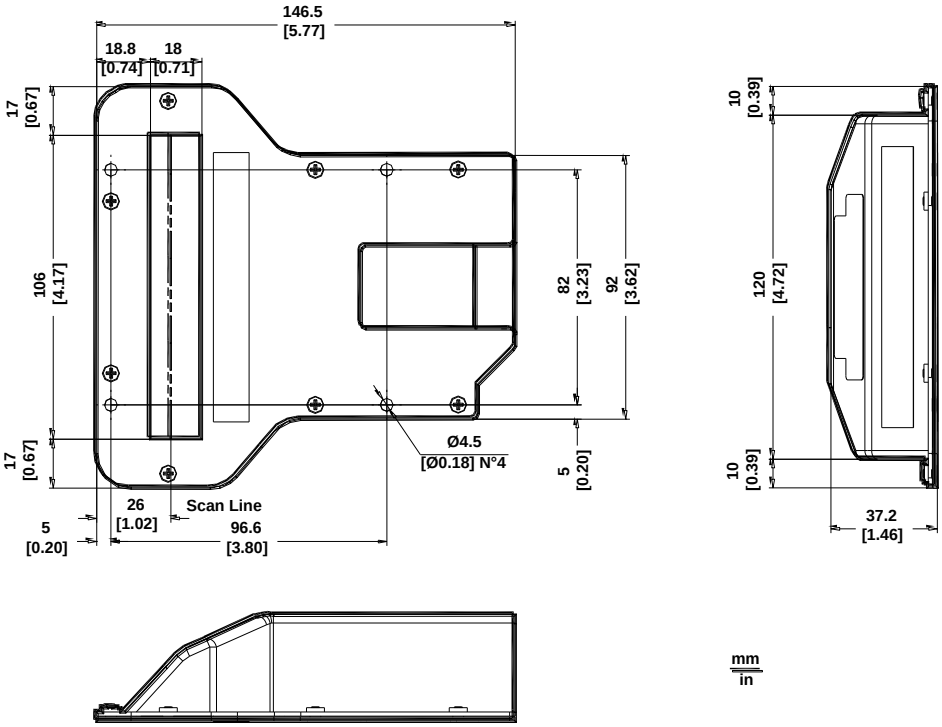

Figure 27 - GFC-200 Overall Dimensions

To fix the scanner to the GFC-200, use the two **M 4 x 6** mm screws supplied with the GFC Kit. Refer to the following figure.

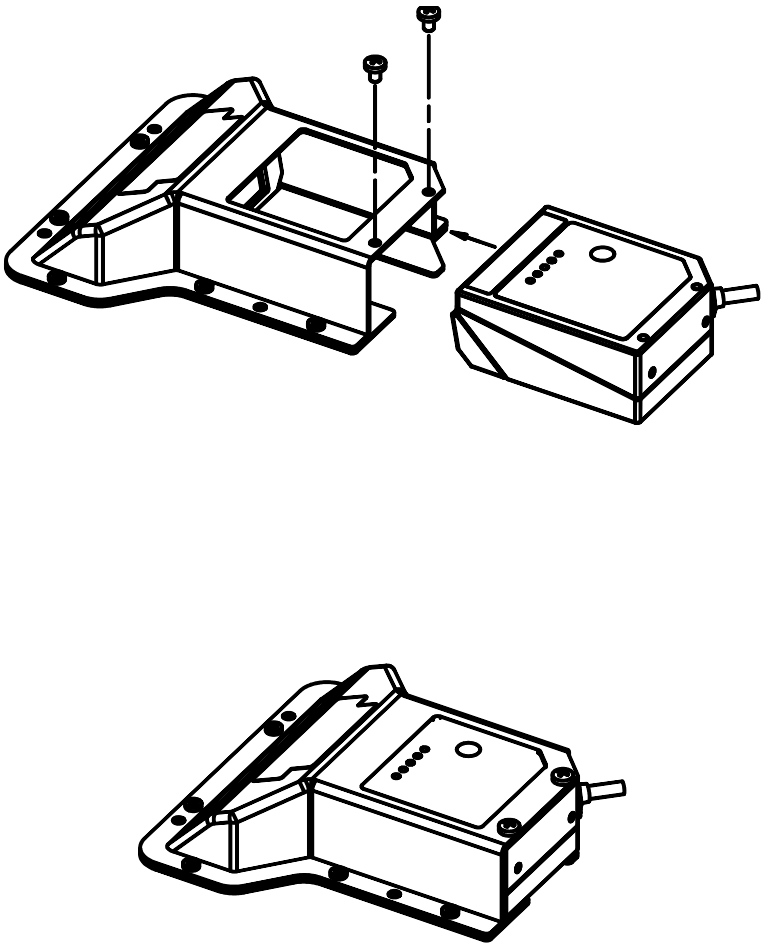

Figure 28 – Fixing DS2X00N Scanner to GFC-200

The GFC-200 85° contact reading mirror assures that the minimum skew angle is maintained to avoid direct light reflection which can degrade reading performance.

When reading very reflective barcodes, it may be necessary to increase the skew angle (up to 10° - 15°). In this case, the GFC-200 should be mounted with a corresponding inclination.

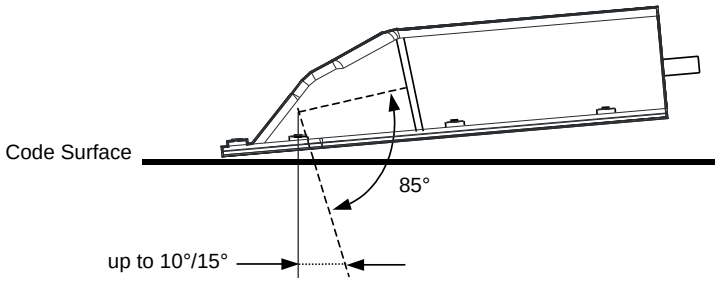

Figure 29 – Maintaining Minimum Skew Angle

The internal optical path from the scanner reading window to the GFC-200 window is 51 mm.

The reading distance of the scanner with the GFC-200 is shifted by 51 mm towards the scanner because of the internal optical path between the scanner and the GFC-200 output window.

The reading performance also decreases in typical conditions by about 10% due to the optical signal passing through the output window of the GFC-200 and the reflection on the mirror surface.

The combination of these effects produces the reading diagram represented below:

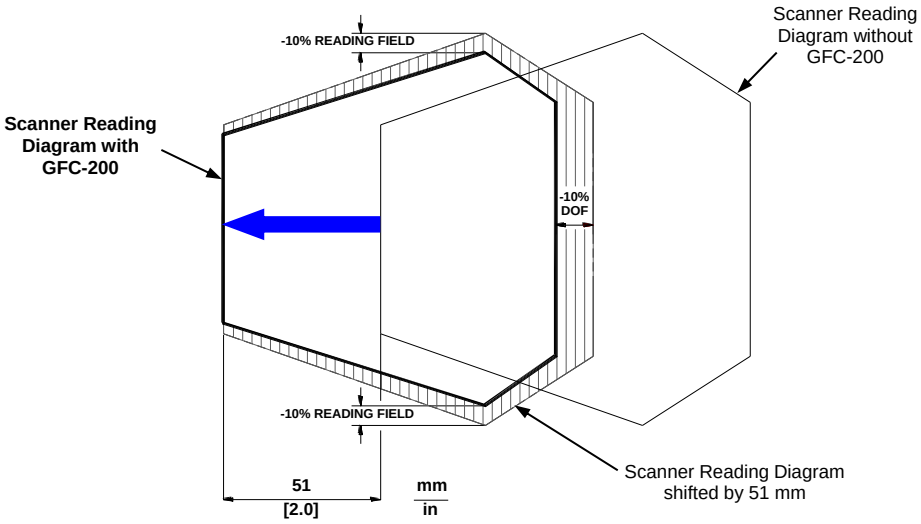

Figure 30 – GFC-200 Reading Performance Comparison

3.3.4 Mounting an OM2000N Accessory Oscillating Mirror

The OM2000N oscillating mirror is designed to generate homogeneous and adjustable raster reading through deflection of the scanning laser beam.

The system consists of the oscillating mirror attached to the scanner and allows a surface instead of a line to be observed; versatility and reading accuracy are therefore increased in "Picket Fence" reading mode.

The electronic and electromechanical components controlling the mirror movement are contained inside the rugged metal casing, which guarantees protection class IP65 when the OM2000N is mounted correctly onto the scanner.

The OM2000N is directly powered from the scanner through a connector which is accessible after removing the scanning window (see Figure 33). It therefore operates exclusively at low power, between 10 and 30 VDC.

CAUTION: The OM2000N accessory is not compatible with and therefore cannot be used on Subzero models.

The following figure gives the overall dimensions of the scanner + OM2000N and may be used for its installation in the application.

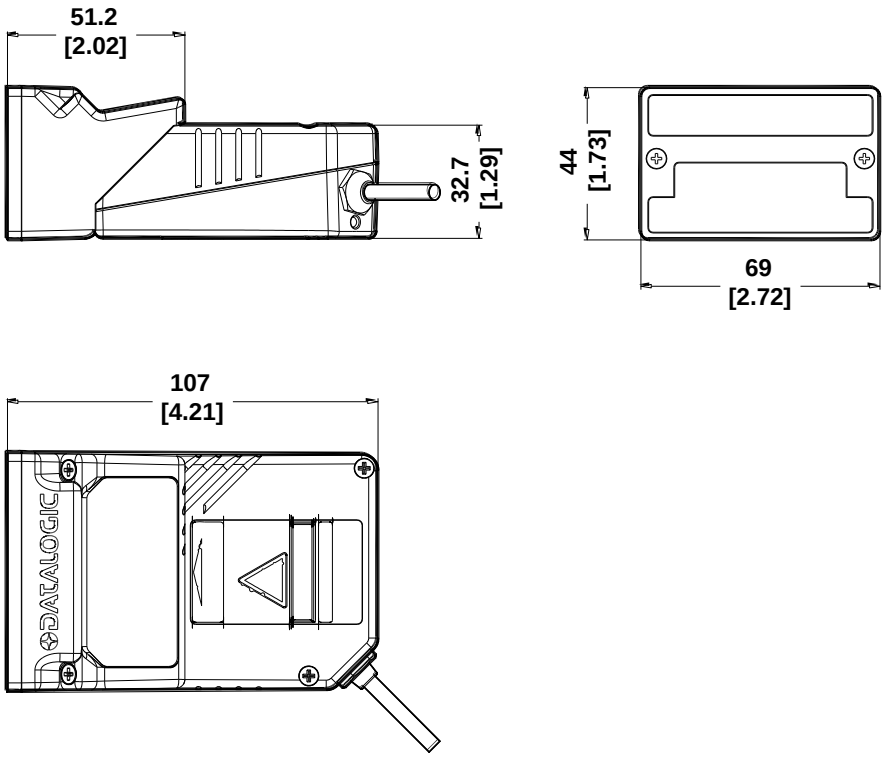

Figure 31 – Scanner + OM2000N Overall Dimensions

The installation of the deflection mirror is very easy.

1) Clean the OM2000N mirror surface and output window (internally and externally) with a clean soft cloth and alcohol before assembling it to the scanner.

CAUTION: All abrasive substances must be absolutely avoided as they cause irreparable damage to the transparency of the glass.

2) Remove the scanning window from the scanner (see Figure 32).

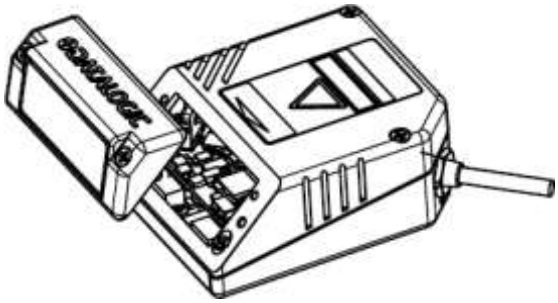

Figure 32 – Remove Scanning Window

3) Bring the OM2000N close to the scanner and insert the cable into the power connector of the scanner (see Figure 33).

NOTE: Make sure the cable doesn't remain in the path of the mirror movement.

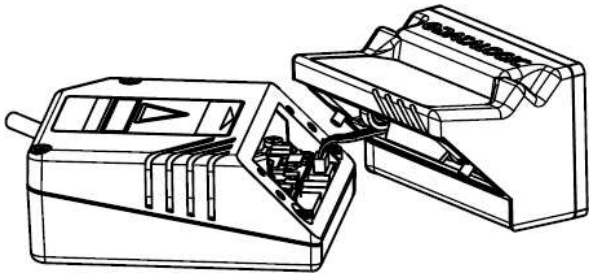

Figure 33 – OM2000N Electrical Connection

4) Check that the seal is correctly positioned and then after having aligned the OM2000N onto the scanner, fix it using the two screws (see Figure 34).

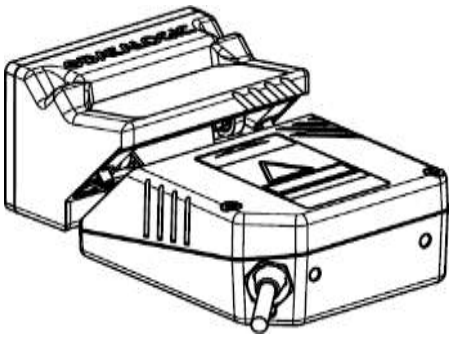

Figure 34 –Mount OM2000N

5) In the indicated space on the front side of the OM2000N, apply the relative replicate scanner serial number label provided with the scanner itself (see Figure 35).

Figure 35 – Apply Replicate Scanner SN Label

The reading distance of the scanner with the OM2000N is shifted by 10 mm towards the scanner because of the internal optical path between the scanner and the OM2000N output window. The reading performance also decreases in typical conditions by about 10% due to the optical signal passing through the output window of the OM2000N and the reflection on the mirror surface. The combination of these effects produces the reading diagram represented below:

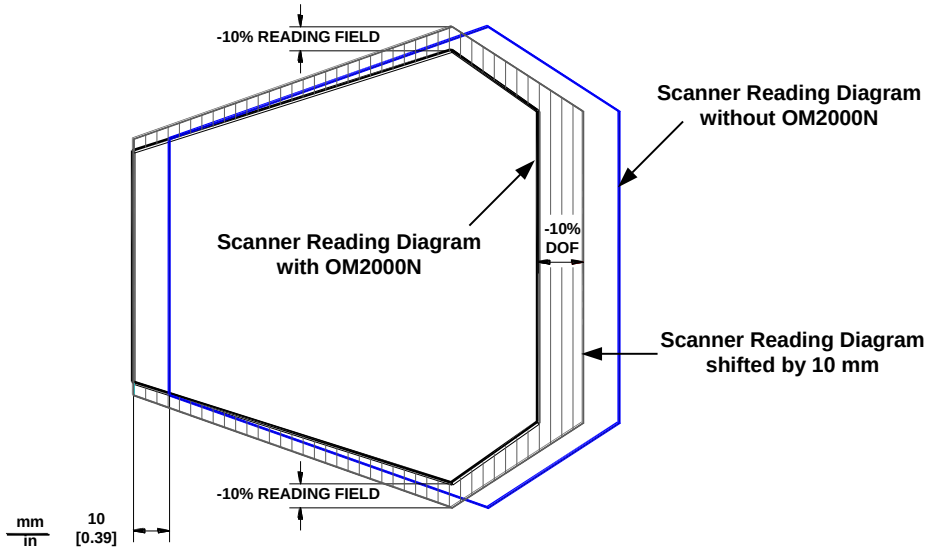

Figure 36 – OM2000N Reading Performance Comparison

The reading distance also depends on the amplitude of aperture used. In particular, wider apertures require the scanner to be closer to the code in order to read at the extreme edges of the sweep (see Figure 37 below).

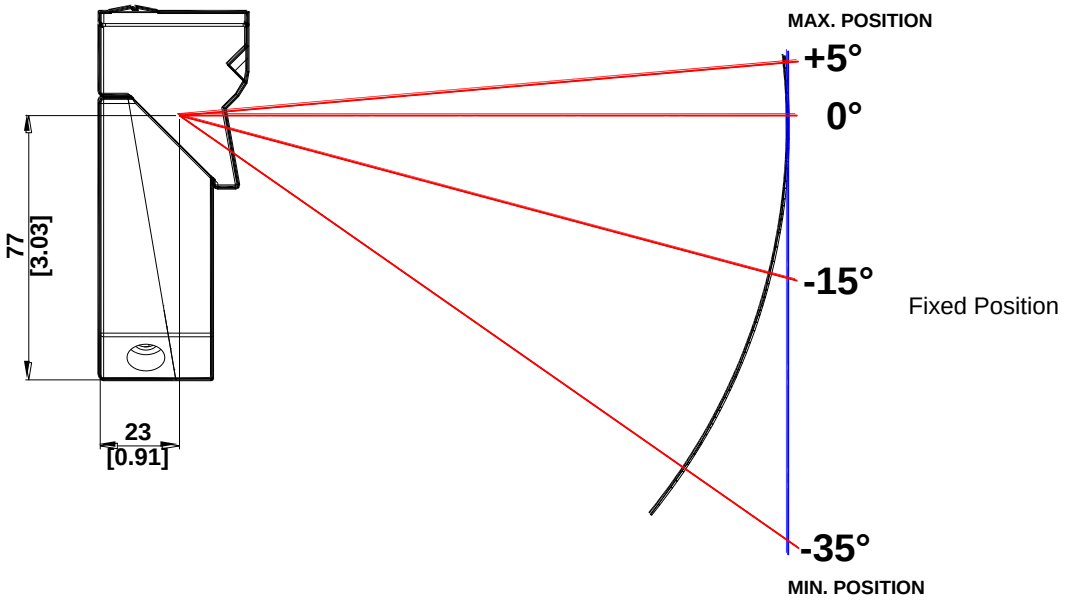

Figure 37 – OM2000N Reading Distance

NOTE: The OM2000N is configurable exclusively through the Genius™ utility program.

3.4 POSITIONING

The scanner is able to decode moving barcode labels at a variety of angles, however significant angular distortion may degrade reading performance.

When mounting the scanner take into consideration these three ideal label position angles: **Skew 10° to 30°, Tilt 0° and Pitch 0°**.

Follow the suggestions for the best orientation:

The **Skew** angle is represented by the value **S** in Figure 38. Position the reader to **assure at least 10°** for the **Skew** angle. This avoids the direct reflection of the laser light emitted by the scanner.

For the raster version, this angle refers to the most inclined or external raster line, so that all other raster lines assure **more** than 10° Skew.

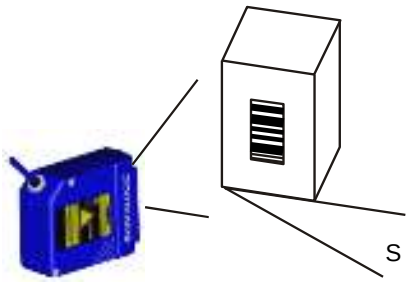

Figure 38 - Skew Angle

The **Tilt** angle is represented by the value **T** in Figure 39. Position the reader in order to **minimize** the **Tilt** angle.

By using the Reconstruction Reading Mode software parameter, the tilt angle is less critical and can be decoded even if the scan line doesn't cross the entire code.

See par. 6.1 or the Help On Line for details.

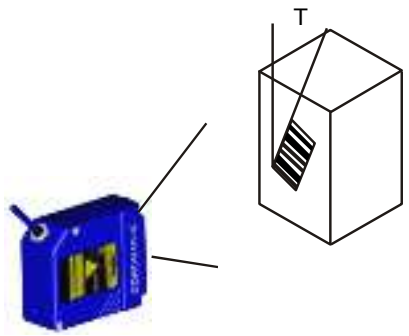

Figure 39 - Tilt Angle

The **Pitch** angle is represented by the value **P** in Figure 40. Position the reader in order to **minimize** the **Pitch** angle.

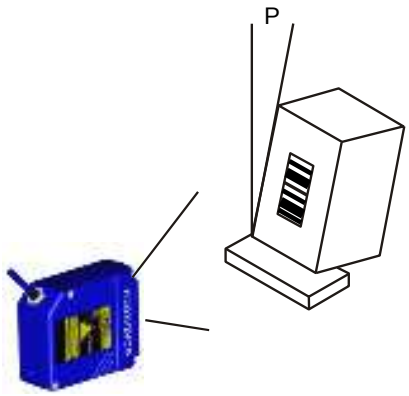

Figure 40 - Pitch Angle

4 ELECTRICAL INSTALLATION

Serial Interface models are equipped with a cable terminated by a 25-pin male D-sub connector for connection to the power supply and input/output signals. For Ethernet models, an accessory 17-pin to 25-pin cable is available for CBX connections.

We recommend making system connections through one of the CBX connection boxes since they offer the advantages of easy connection, easy device replacement and filtered reference signals.

NOTE: If you require direct wiring to the scanner, the details of the connector pins and relative connections are indicated in Appendix A for Serial models or in Appendix B for Built-in Ethernet models.

NOTE: Profinet-IO models do not connect to the CBX connection boxes. The details of the connector pins and relative connections are indicated in Appendix C.

The table below gives the pinout of the CBX100/500 terminal block connectors. Use this pinout when the scanner is connected by means of the CBX100/500:

CBX100/500 Terminal Block Connectors	
Input Power	
Vdc	Power Supply Input Voltage +
GND	Power Supply Input Voltage -
Earth	Protection Earth Ground
Inputs	
+V	Power Source – External Trigger
I1A	External Trigger A (polarity insensitive)
I1B	External Trigger B (polarity insensitive)
-V	Power Reference – External Trigger
+V	Power Source – Inputs
I2A	Input 2 A (polarity insensitive)
I2B	Input 2 B (polarity insensitive)
-V	Power Reference – Inputs
Outputs	
+V	Power Source - Outputs
-V	Power Reference - Outputs
O1+	Output 1 +
O1-	Output 1 -
O2+	Output 2 +
O2-	Output 2 -
Auxiliary Interface	
TX	Auxiliary Interface TX
RX	Auxiliary Interface RX
SGND	Auxiliary Interface Reference
ID-NET™	
REF	Network Reference
ID+	ID-NET™ network +
ID-	ID-NET™ network -
Shield	Network Cable Shield

Main Interface			
	RS232	**RS485 Full-Duplex**	**RS485 Half-Duplex**
	TX	TX+	RTX+
	RX	*RX+	
	RTS	TX-	RTX-
	CTS	*RX-	
	SGND	SGND	SGND

* Do not leave floating, see par. 4.2.2 for connection details.

NOTE: To avoid electromagnetic interference when the scanner is connected to a CBX connection box, verify the jumper positions in the CBX as indicated in its Installation Manual.

4.1 POWER SUPPLY

Power can be supplied to the scanner through the CBX100/500 spring clamp terminal pins as shown in Figure 41:

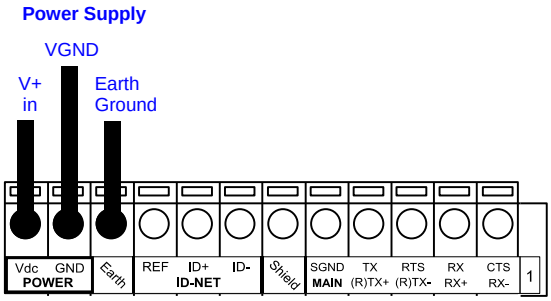

Figure 41 - Power Supply Connections

The power must be between 10 and 30 Vdc only.

For DS2400N Subzero models using CBX100 LT the power must be 24 Vdc.

It is recommended to connect the device CHASSIS to earth ground (Earth) by setting the appropriate jumper in the CBX connection box. See the CBX Installation Manual for details.

4.2 MAIN SERIAL INTERFACE

CAUTION: Do not connect to the Main Interface spring clamp terminals if using Host Interface Modules (Fieldbus) with the CBX500.

The signals relative to the following serial interface types are available on the CBX spring clamp terminal blocks.

If the interface type is not compatible with the current communication handshaking, then the system forces the handshake to **none**.

The main interface type and the relative parameters (baud rate, data bits, etc.) can be set using the Genius™ utility program or the Genius™ based Host Mode Programming procedure.

Details regarding the connections and use of the interfaces are given in the next paragraphs.

4.2.1 RS232 Interface

The serial interface is used in this case for point-to-point connections; it handles communication with the host computer and allows both transmission of code data and the programming of the scanner. This is the default setting.

The following pins are used for RS232 interface connection:

CBX100/500	Function
TX	Transmit Data
RX	Receive Data
RTS	Request To Send
CTS	Clear To Send
SGND	Signal Ground

It is always advisable to use shielded cables. The overall maximum cable length must be less than 15 m (49.2 ft).

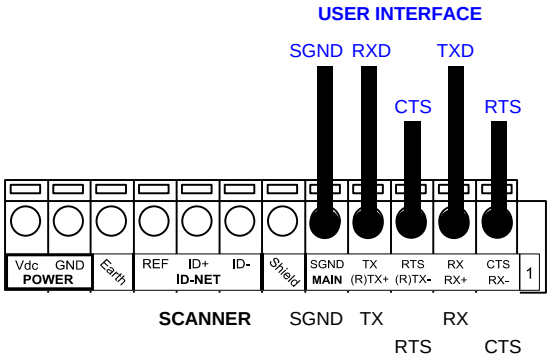

Figure 42 – RS232 Main Interface Connections Using Hardware Handshaking

The RTS and CTS signals control data transmission and synchronize the connected devices.

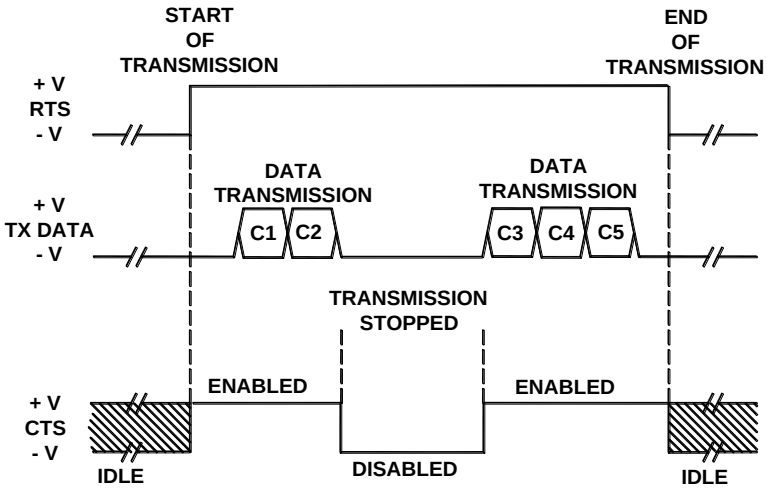

Figure 43 - RS232 Control Signals

If the RTS/CTS handshaking protocol is enabled, the scanner activates the RTS output to indicate a message is to be transmitted. The receiving unit activates the CTS input to enable the transmission.

4.2.2 RS485 Full-Duplex Interface

The RS485 full-duplex (5 wires + shield) interface is used for non-polled communication protocols in point-to-point connections over longer distances (max 1200 m / 3940 ft) than those acceptable for RS232 communications or in electrically noisy environments.

The CBX pinout follows:

CBX100/500	Function
TX+	RS485 Transmit Data +
RX+	RS485 Receive Data +
TX-	RS485 Transmit Data -
RX-	RS485 Receive Data -
SGND	Signal Ground

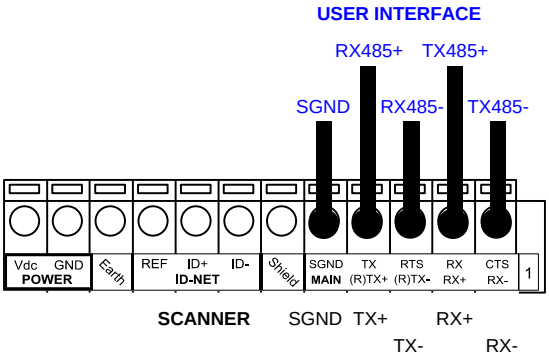

Figure 44 - RS485 Full-duplex Connections

NOTE: For applications that do not use RX485 signals, do not leave these lines floating but connect them to SGND as shown below.

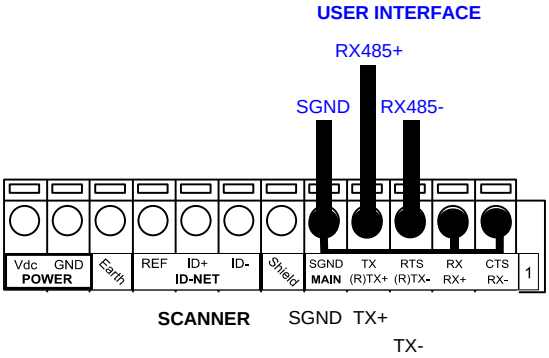

Figure 45 - RS485 Full-duplex Connections using Only TX Signals

4.2.3 RS485 Half-Duplex Interface

NOTE: This interface is provided for backward compatibility. We recommend using the more efficient ID-NET™ network for Master/Slave or Multiplexer layouts.

The RS485 half-duplex (3 wires + shield) interface is used for polled communication protocols.

It can be used for Multidrop connections with a Datalogic Multiplexer, exploiting a proprietary protocol based on polled mode called MUX32 protocol, where a master device polls slave devices to collect data.

CBX100/500	Function
RTX+	RS485 Receive/Transmit Data +
RTX-	RS485 Receive/Transmit Data -
SGND	Signal Ground

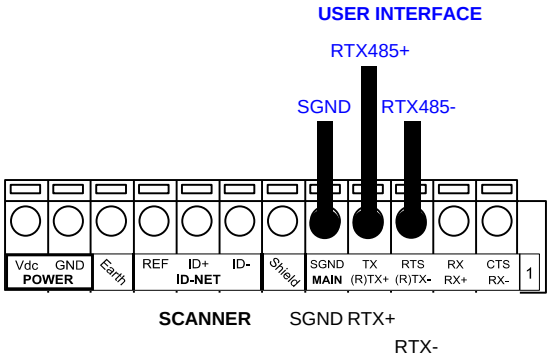

Figure 46 - RS485 Half-duplex Connections

This interface is forced by software when the protocol selected is MUX32 protocol.

In a Multiplexer layout, the Multidrop address must also be set via serial channel by the Genius™ utility or by the Host Programming Mode.

Figure 47 shows a multidrop configuration with scanners connected to a Multiplexer.

CAUTION: This is an example of multidrop wiring. Consult the multiplexer manual for complete wiring instructions.

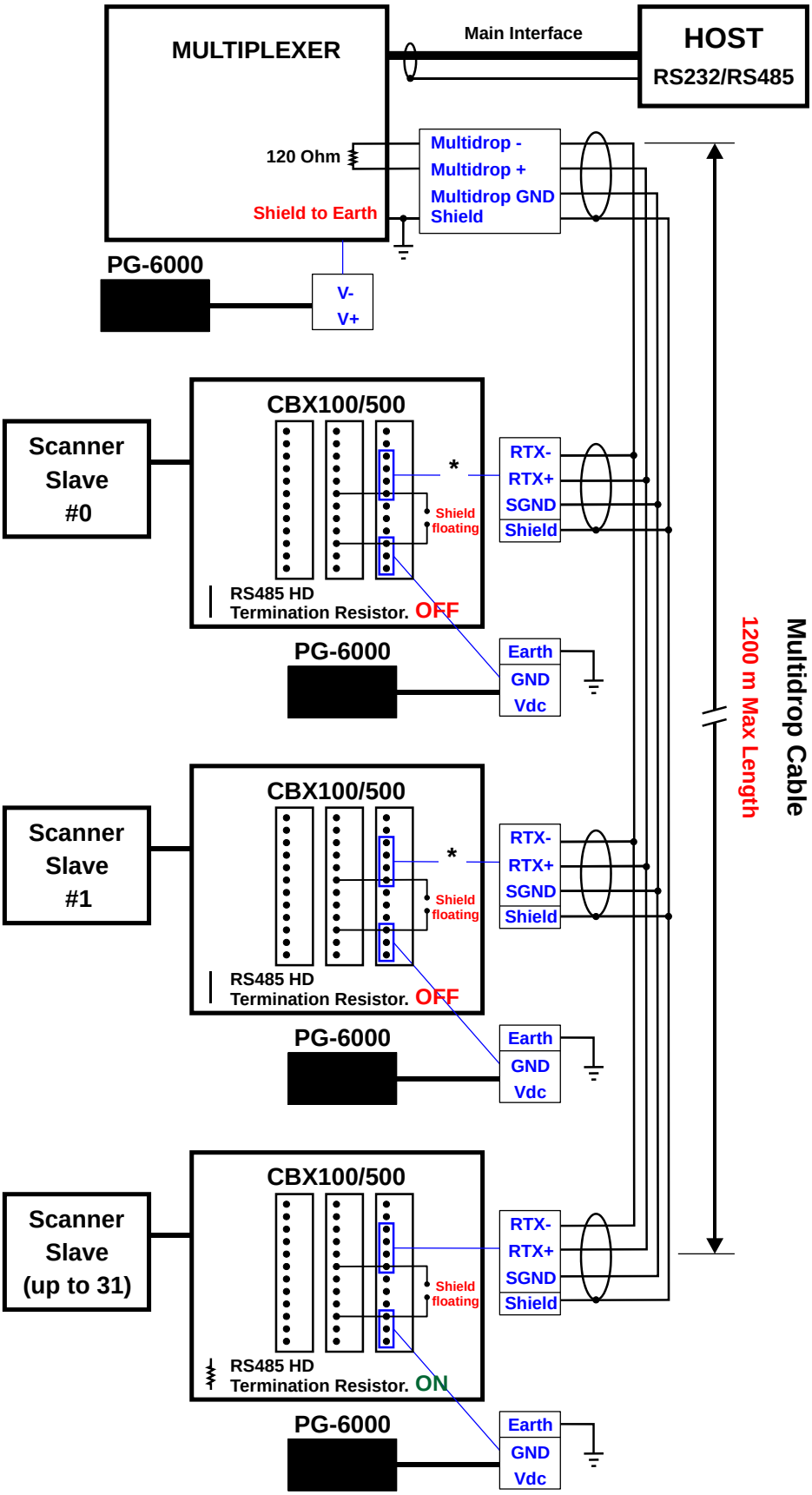

Figure 47 - Multidrop Connection to a Multiplexer

***** When using CBX500, the **Main** interface multidrop network signals: **Shield**, **SGND**, **RTX+**and **RTX-** are repeated on terminal connector row 4 to facilitate system cabling.

4.3 ID-NET™ INTERFACE

CBX100/500	Function
Shield	Network Cable Shield
ID+	ID-NET™ network +
ID-	ID-NET™ network -
REF	Network Reference

4.3.1 ID-NET™ Cables

The following instructions are referred to Figure 49, Figure 50 and Figure 51.

- The general cable type specifications are: CAT5 twisted pair + additional CAT5 twisted pair, shielded cable AWG 24 (or AWG 22) stranded flexible.

  We recommend using DeviceNet cables (drop or trunk type) to the following reference standards:

  AN50325 – IEC 62026

  UL STYLE 2502 80°C 30V
- Cable Shield MUST be connected to earth ground ONLY at the Master.
- NEVER use ID-NET™ cable shield as common reference.
- The ID-NET™ max cable length depends on the baudrate used, (see the Baudrate Table below).
- For Common Power Connections use only 2 wires (ID+ and ID-).
  - DC Voltage Power cable (Vdc – GND) should be handled as a signal cable (i.e. do not put it together with AC cable):
  - Wire dimensioning must be checked in order to avoid voltage drops greater than 0.8 Volts.
  - Cable should lie down as near as possible to the ID-NET™ cable (avoiding wide loops between them).
- Scanner's chassis may be connected to earth.
- Network inside the same building.

Baudrate Table				
Baud Rate	125 kbps	250 kbps	**500 kbps**	1Mbps
Cable Length	1200 m	900 m	**700 m**	*

* Application dependent, contact your Datalogic Automation representative for details.

NOTE: The default ID-NET™ baudrate is 500 kbps. Lower ID-NET™ baudrates allow longer cable lengths. The baudrate is software configurable by authorized Datalogic Automation personnel only.

4.3.2 ID-NET™ Response Time

The following figure shows the response time of the ID-NET™ network. This time is defined as the period between the Trigger activation and the beginning of data transmission to the Host.

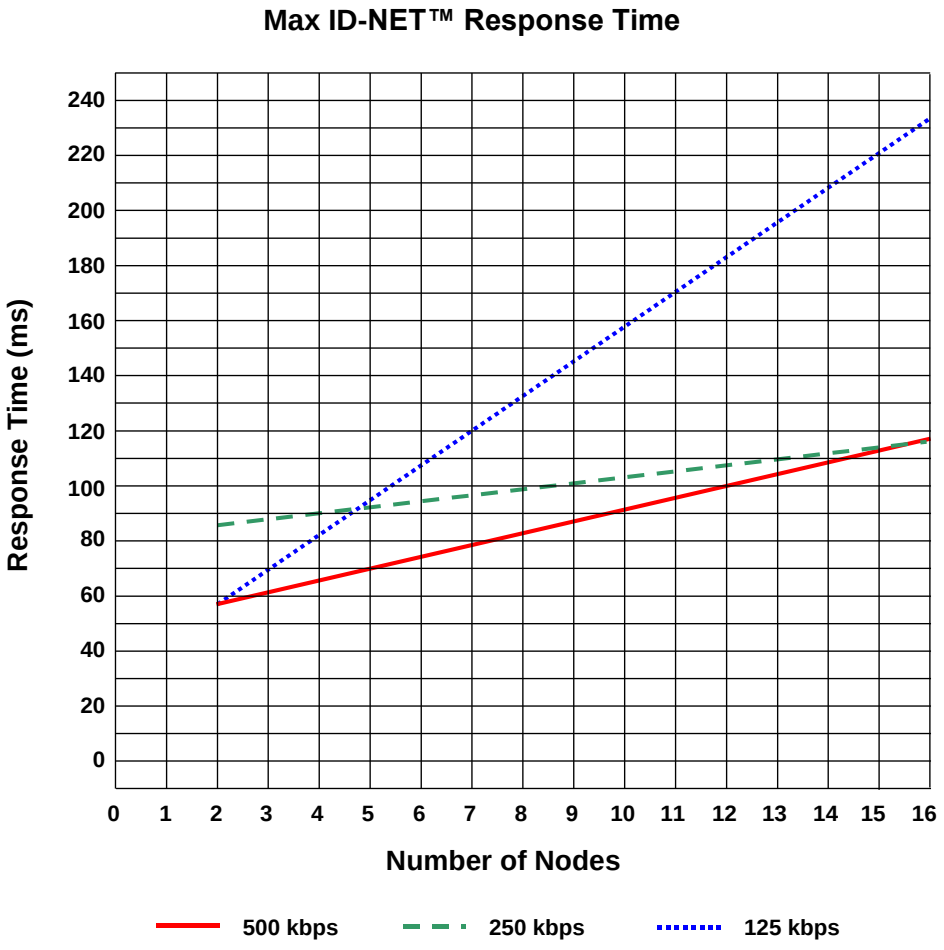

Figure 48 – ID-NET™ Response Time

CONDITIONS:

- ID-NET™ M/S Synchronized layout
- message length = 50 bytes per node

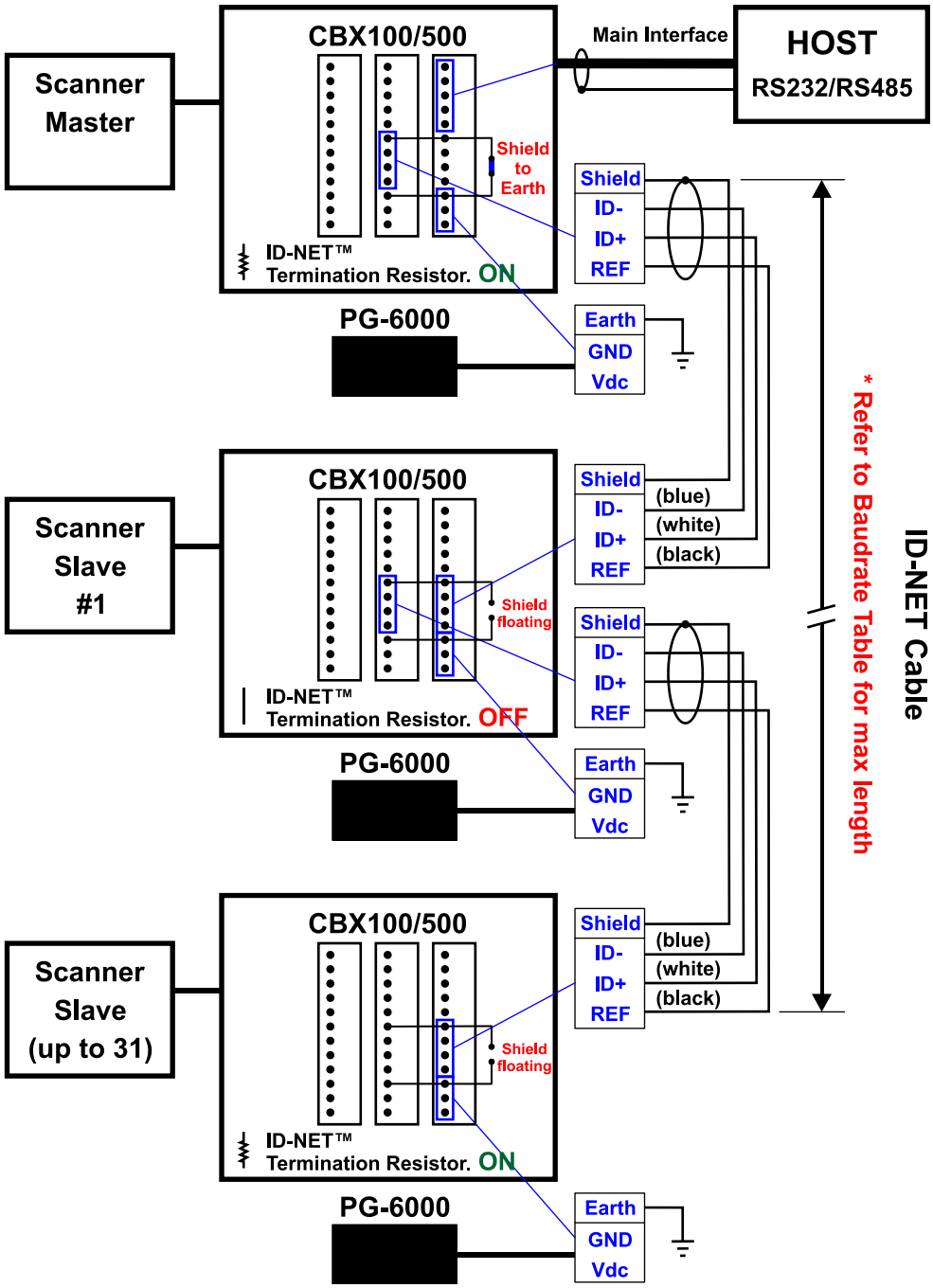

Figure 49 – ID-NET™ Network Connections with isolated power blocks

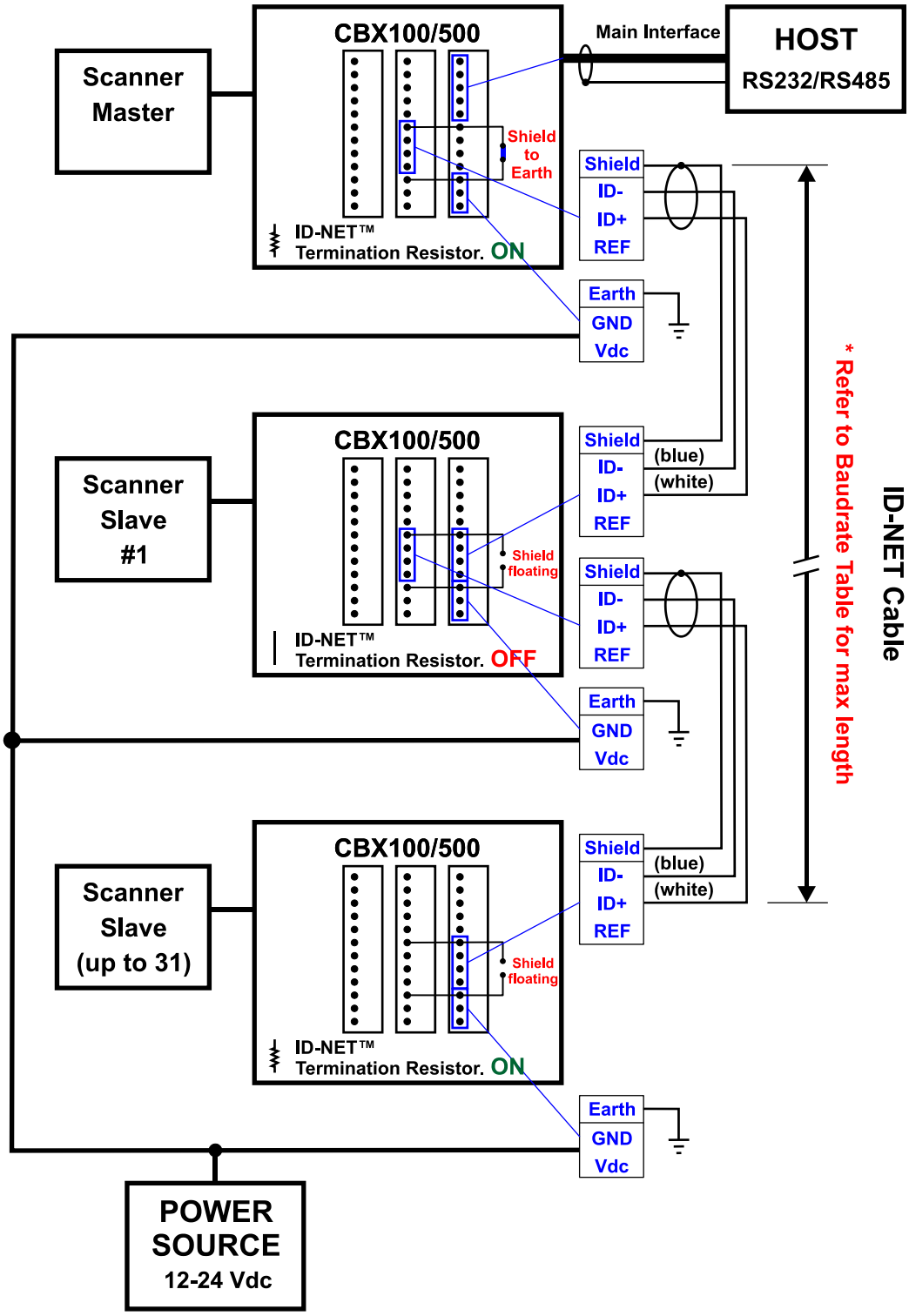

Figure 50 - ID-NET™ Network Connections with Common Power Branch Network

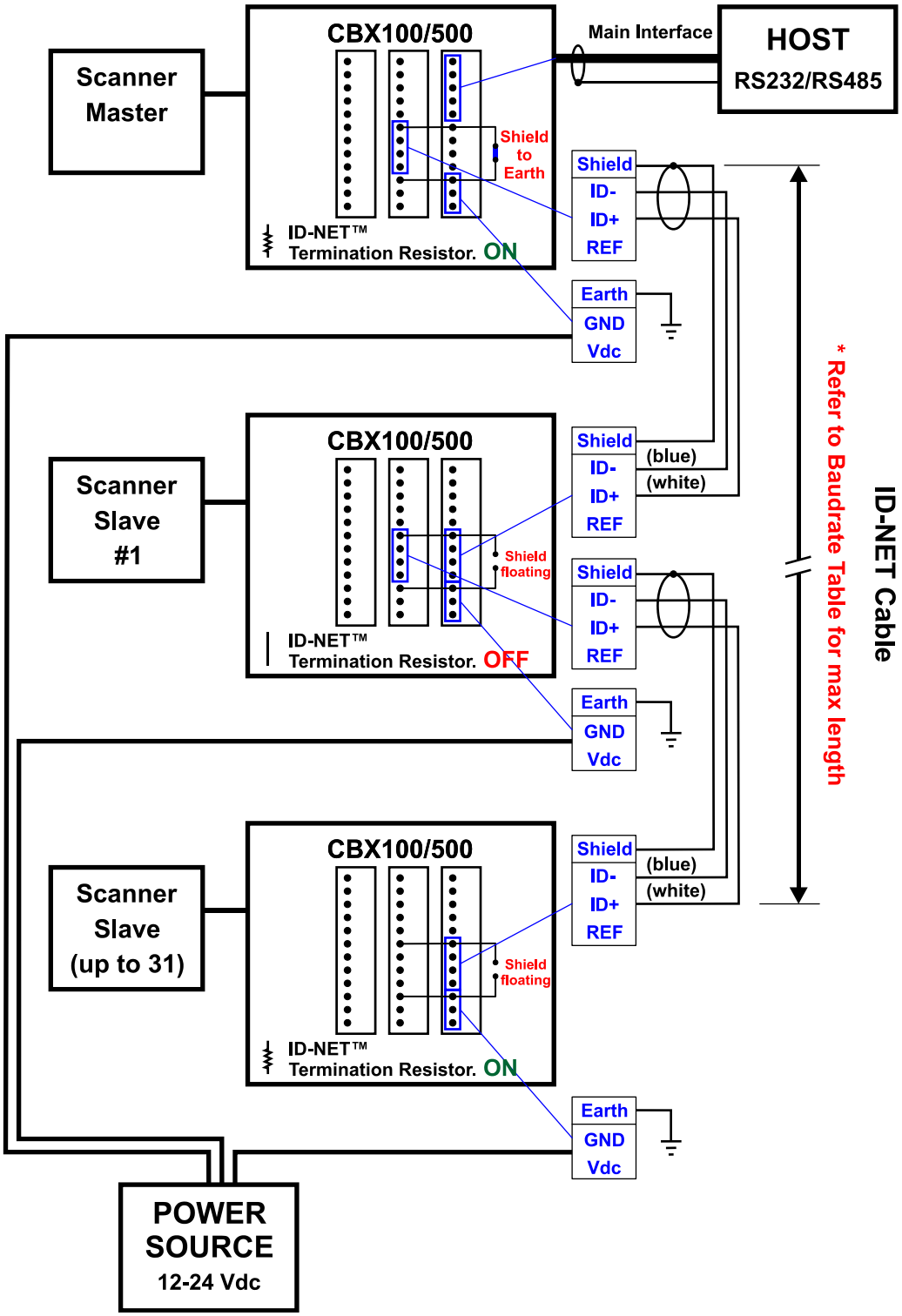

Figure 51 – ID-NET™ Network Connections with Common Power Star Network

4.3.3 ID-NET™ Network Termination

The network must be properly terminated in the first and last scanner of the network. This is done by setting the ID-NET™ Termination Resistance Switch in the CBX100/500 to ON.

4.4 AUXILIARY RS232 INTERFACE

The auxiliary serial interface is used exclusively for RS232 point-to-point connections.

The parameters relative to the aux interface (baud rate, data bits, etc.) as well as particular communication modes such as LOCAL ECHO can be defined using the Genius™ utility program or Genius™ based Host Mode Programming installed from the CD-ROM.

The 9-pin female Auxiliary Interface connector inside the CBX is the preferred connector for device configuration or communication monitoring.

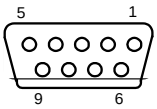

Figure 52 - 9-pin female connector

If permanent system wiring is required, the following pins are used to connect the RS232 auxiliary interface:

CBX100/500	Function
RX	Auxiliary Interface Receive Data
TX	Auxiliary Interface Transmit Data
SGND	Auxiliary Interface Reference

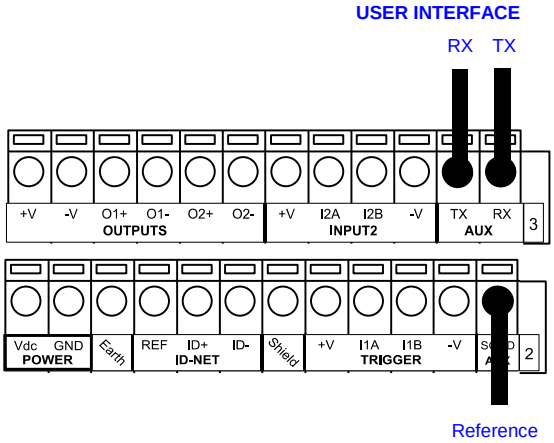

Figure 53 - RS232 Auxiliary Interface Connections

NOTE: Do not connect the Aux Interface to the CBX spring clamp connectors and the 9-pin connector simultaneously.

4.5 INPUTS

There are two optocoupled polarity insensitive inputs available on the scanner: Input 1 (External Trigger) and Input 2, a generic input:

The electrical features of both inputs are:

Maximum voltage: 30 Vdc
Maximum current: 12 mA (scanner) + 12 mA (CBX)

An anti-disturbance filter is implemented in software on both inputs so that the minimum pulse duration is ≅ 5 milliseconds. This value can be increased through the software parameter Debounce Filter, see the "2K/4K Family Software Configuration Parameter Guide" Help file".

CBX100/500	Function
+V	Power Source - External Trigger
I1A	External Trigger A (polarity insensitive)
I1B	External Trigger B (polarity insensitive)
-V	Power Reference - External Trigger

The External Trigger input is used in the On-Line operating Mode and tells the scanner to scan for a code. The active state of this input is selected in software. Refer to the Genius™ Help On Line.

The yellow Trigger LED (Figure A, 3) is on when the active state of the External Trigger corresponds to ON.

This input is optocoupled and can be driven by both an NPN and PNP type command. The connections are indicated in the following diagrams:

EXTERNAL TRIGGER INPUT CONNECTIONS USING SCANNER POWER

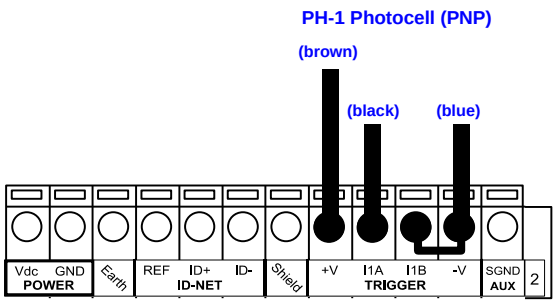

Figure 54 – PH-1 (PNP) External Trigger Using Scanner Power

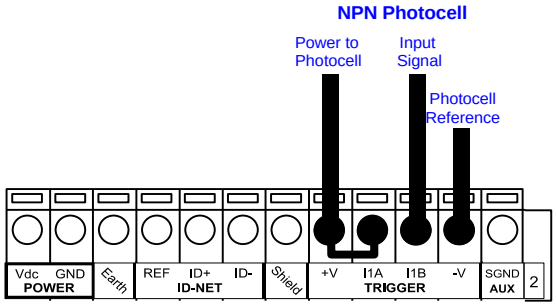

Figure 55 - NPN External Trigger Using Scanner Power

EXTERNAL TRIGGER INPUT CONNECTIONS USING EXTERNAL POWER

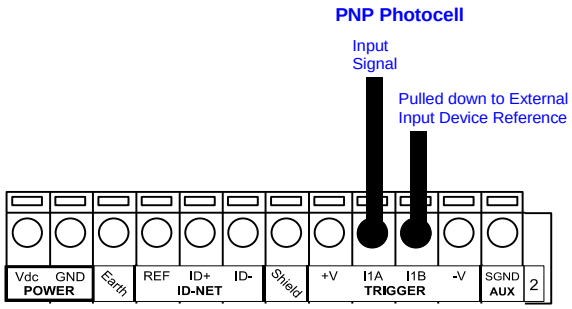

Figure 56 - PNP External Trigger Using External Power

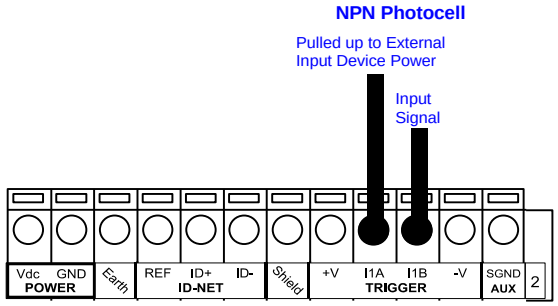

Figure 57 - NPN External Trigger Using External Power

CBX100/500	Function
+V	Power Source - Inputs
I2A	Input 2 A (polarity insensitive)
I2B	Input 2 B (polarity insensitive)
-V	Power Reference - Inputs

INPUT 2 CONNECTIONS USING SCANNER POWER

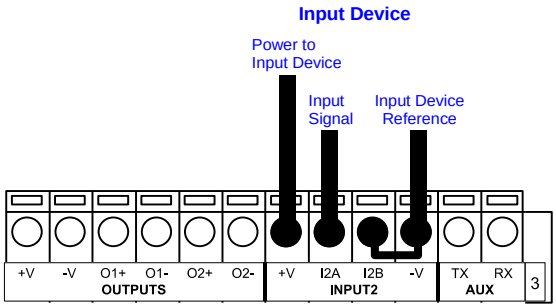

Figure 58 - PNP Input 2 Using Scanner Power

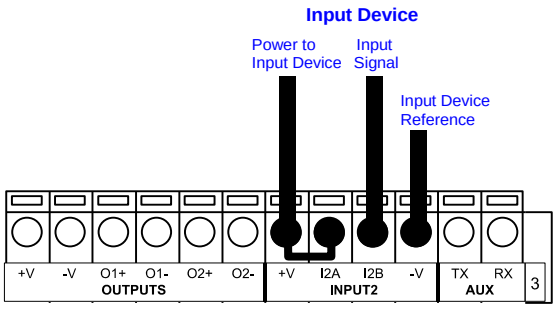

Figure 59 - PNP Input 2 Using Scanner Power

INPUT 2 CONNECTIONS USING EXTERNAL POWER

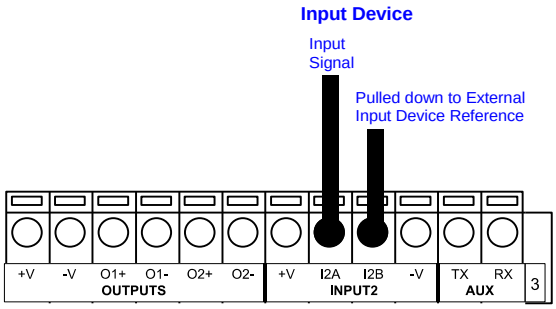

Figure 60 - PNP Input 2 Using External Power

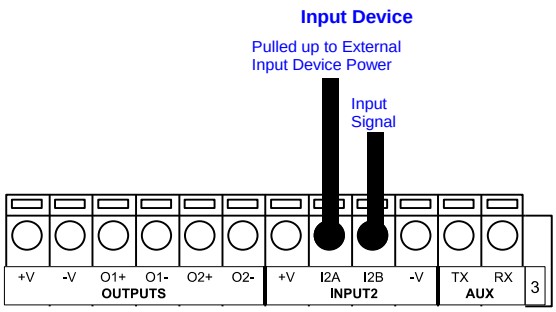

Figure 61 - NPN Input 2 Using External Power

4.5.1 Code Verifier

If the scanner is used as a Code Verifier, the verifier code can be configured in software through the Genius™ configuration program. However it is also possible to use one of the inputs to trigger when the scanner should store a code read as the verifier code.

The Code Verifier parameter must be enabled, and the configuration parameters to allow correct Code Type reading must be saved to the scanner in order to read the verifier code.

When the selected input is activated, the next read code will be stored as the verifier code in the scanner's non-volatile (Flash) memory.

For more details see the Verifier Parameters in the "2K/4K Family Software Configuration Parameter Guide" Help file".

4.6 OUTPUTS

Two general purpose outputs are available.

CAUTION: For Ethernet models, when **Outputs 1** and **2** are connected through the CBX connection box, they become opto-isolated and polarity sensitive and acquire the electrical characteristics listed below. To function correctly, they require setting the Output Type configuration parameter to NPN for the respective output.

CBX100/500	Function
+V	Power Source - Outputs
O1+	Output 1 +
O1-	Output 1 -
O2+	Output 2 +
O2-	Output 2 -
-V	Power Reference Outputs

The meaning of the two outputs Output 1 and Output 2 can be defined by the user (No Read, Right, Wrong, etc.). Refer to the Genius™ Help On Line.

By default, Output 1 is associated with the No Read event, which activates when the code signaled by the external trigger is not decoded, and Output 2 is associated with the Complete Read event, which activates when all the selected codes are correctly decoded.

The output signals are fully programmable being determined by the configured Activation/Deactivation events, Deactivation Timeout or a combination of the two.

The electrical features of the outputs are the following:

V_{CE} = 30 Vdc max.
I_{CE} = 40 mA continuous max.; 130 mA pulsed max.
$V_{CE\ saturation}$ = 1 Vdc max. @ 10 mA
P_D = 90 mW Max. @ 50 °C ambient temp.

OUTPUT 1 AND 2 CONNECTIONS USING SCANNER POWER

CAUTION: Power from the Vdc/GND spring clamps is available directly to the Output Device on the +V/-V spring clamps, and does not pass through the Power Switch (ON/OFF) inside the CBX. Disconnect the power supply when working inside the CBX.

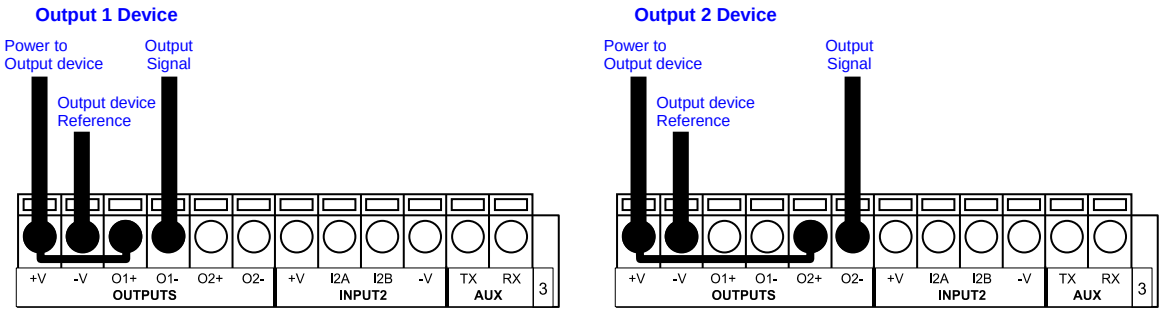

Figure 62 - PNP/Open Emitter Output Using Scanner Power

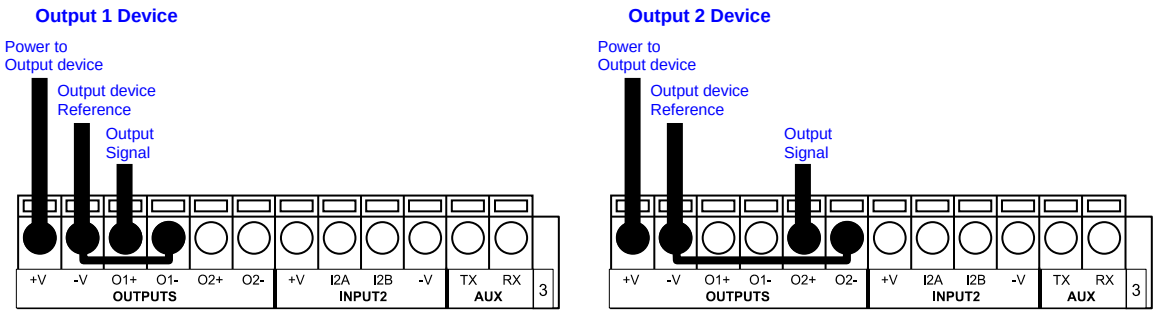

Figure 63 - NPN/Open Collector Output Using Scanner Power

OUTPUT 1 AND 2 CONNECTIONS USING EXTERNAL POWER

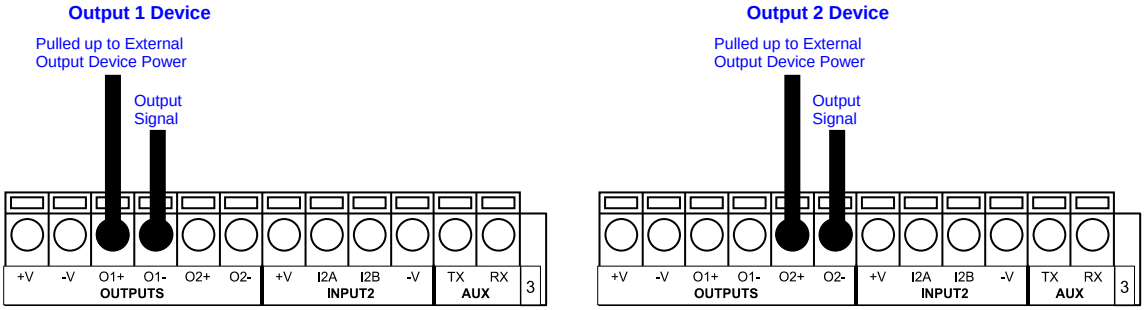

Figure 64 - PNP/Output Open Emitter Using External Power

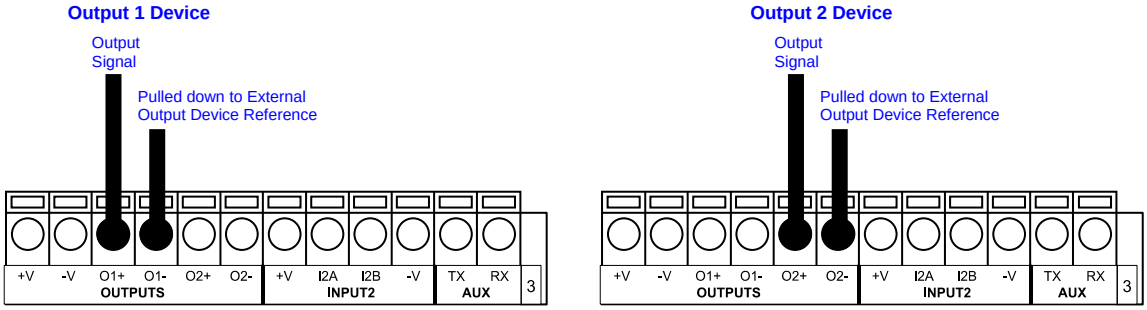

Figure 65 - NPN/Output Open Collector Using External Power

4.7 USER INTERFACE - HOST

The following table contains the pinout for standard RS232 PC Host interface. For other user interface types please refer to their own manual.

RS232 PC-side connections			
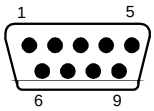 9-pin male connector		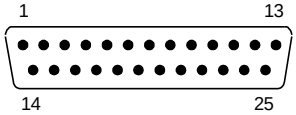 25-pin male connector	
Pin	**Name**	**Pin**	**Name**
2	RX	3	RX
3	TX	2	TX
5	GND	7	GND
7	RTS	4	RTS
8	CTS	5	CTS

5 TYPICAL LAYOUTS

The following typical layouts refer to system hardware configurations. Dotted lines in the figures refer to optional hardware configurations within the particular layout.

These layouts also require the correct setup of the software configuration parameters. Complete software configuration procedures can be found in the **Guide To Rapid Configuration** in the Genius™ Help On Line.

5.1 POINT-TO-POINT

In this layout the data is transmitted to the Host on the main serial interface. A Genius™ based Host Mode programming can be accomplished either through the main interface or the Auxiliary interface.

In Local Echo communication mode, data is transmitted on the RS232 auxiliary interface independently from the main interface selection.

When On-Line Operating mode is used, the scanner is activated by an External Trigger (photoelectric sensor) when the object enters its reading zone.

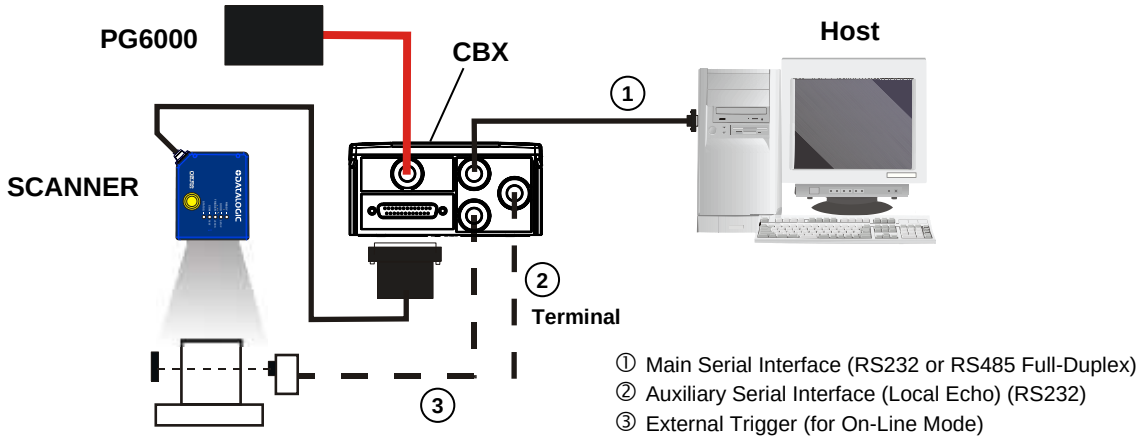

Figure 66 – Serial Interface Point-to-Point Layout

In this layout a single scanner functions as a Slave node on a Fieldbus network. The data is transmitted to the Host through an accessory Fieldbus interface board installed inside the CBX500 connection box.

Scanner configuration can be accomplished through the Auxiliary interface using the Genius™ configuration program or Genius™ based Host Mode programming.

In Local Echo communication mode, data is transmitted on the RS232 auxiliary interface independently from the Fieldbus interface selection.

When On-Line Operating mode is used, the scanner is activated by an External Trigger (photoelectric sensor) when the object enters its reading zone.

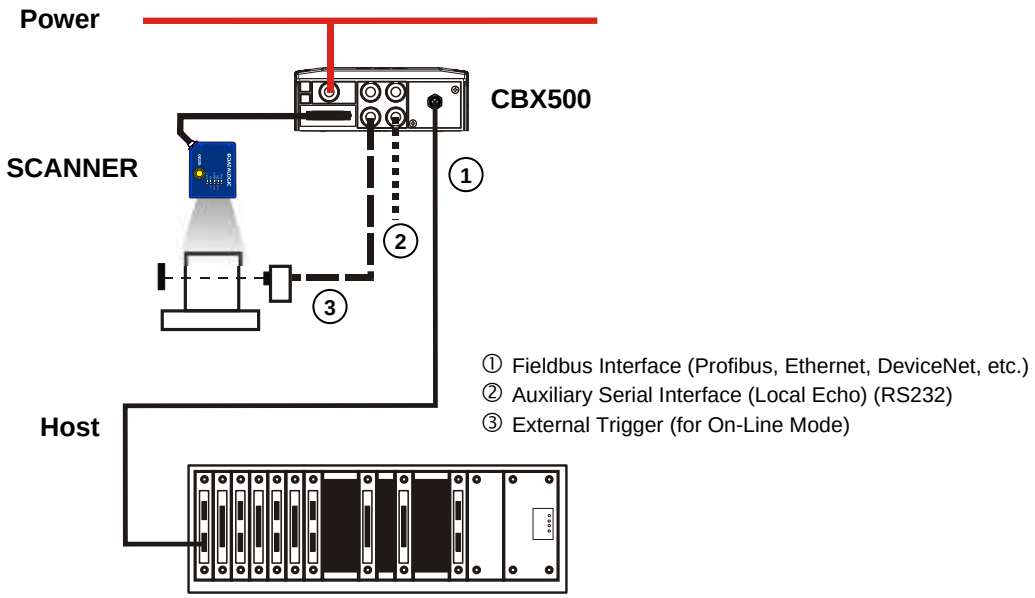

Figure 67 – Fieldbus Interface Point-to-Point Layout

5.2 ETHERNET NETWORKS

5.2.1 External Trigger Ethernet Host
(x3xx models only)

In this layout, before proceeding with the connection, it is necessary to configure the reader Ethernet parameters via Genius™. For further details, see “Configuration Through Ethernet” and the Ethernet Folder in the Genius™ Help On Line.

When using a Local Area Network (LAN), one or more DS2x00N-x3xx model scanners can be connected to the network by using **CAB-ETH-M0x** cables. In the example below Power and an External Trigger are brought to each scanner through a CBX connection box using the **CAB-DS0x-S** cables.

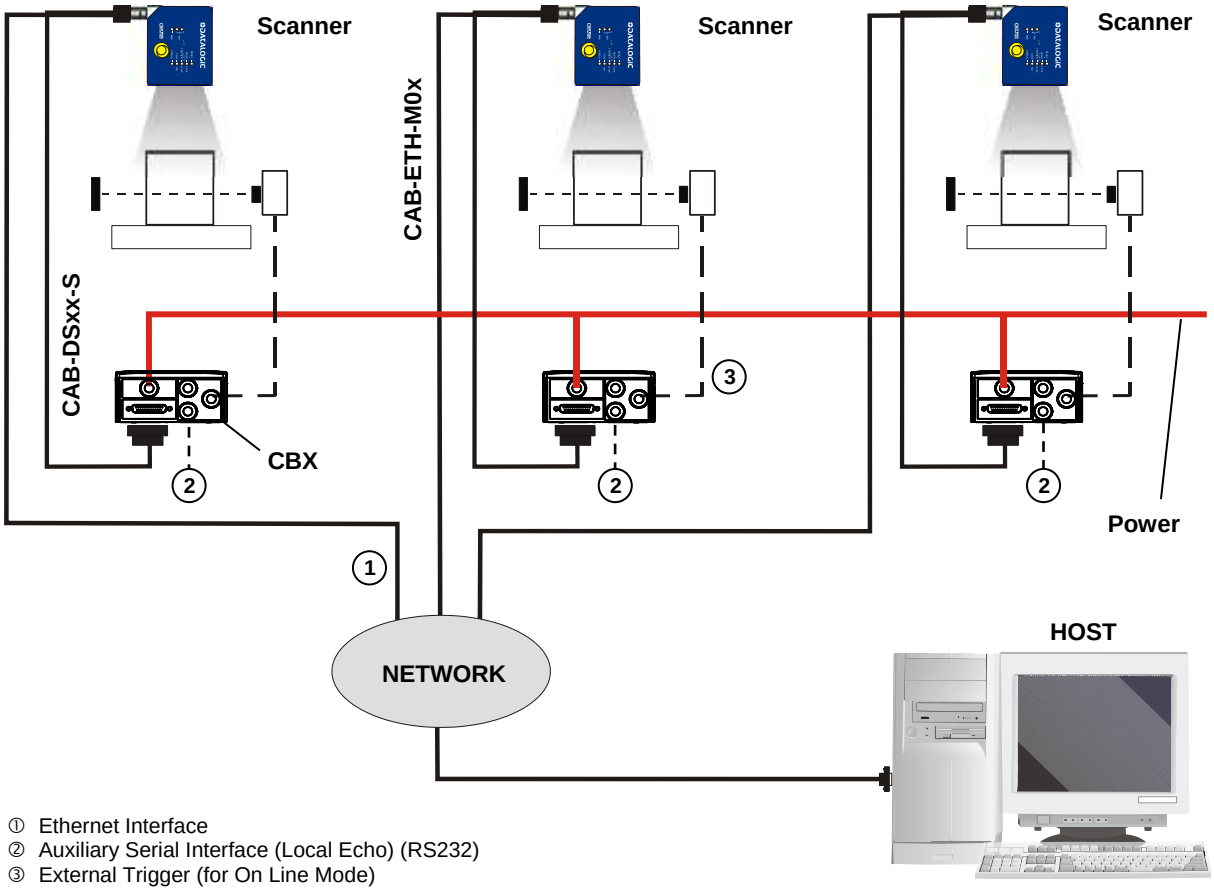

Figure 68 - Ethernet TCP/IP Network Layout

5.3 PROFINET-IO NETWORKS

(x4xx models only)

The PROFINET-IO interface is used to collect data from several readers to build a multi-point or a multi-sided reading system; there can be one PROFINET-IO master (Host) and up to 255 PROFINET-IO slaves (Scanners) connected together in the same subnetwork.

The slave scanners are chained together using the PROFINET-IO interface with an ETH CABLE M12-M12 cable. Every slave scanner must have its own IP address (last octet in the range 1-255).

Power connections can be made using the CS-A1-02 or AS-I accessory power cables to the power source.

5.3.1 Single Station Layout

For a Single Station layout the Host sends the Serial Start/Stop “Trigger” signal to all the readers simultaneously and each scanner sends its message to the Host computer.

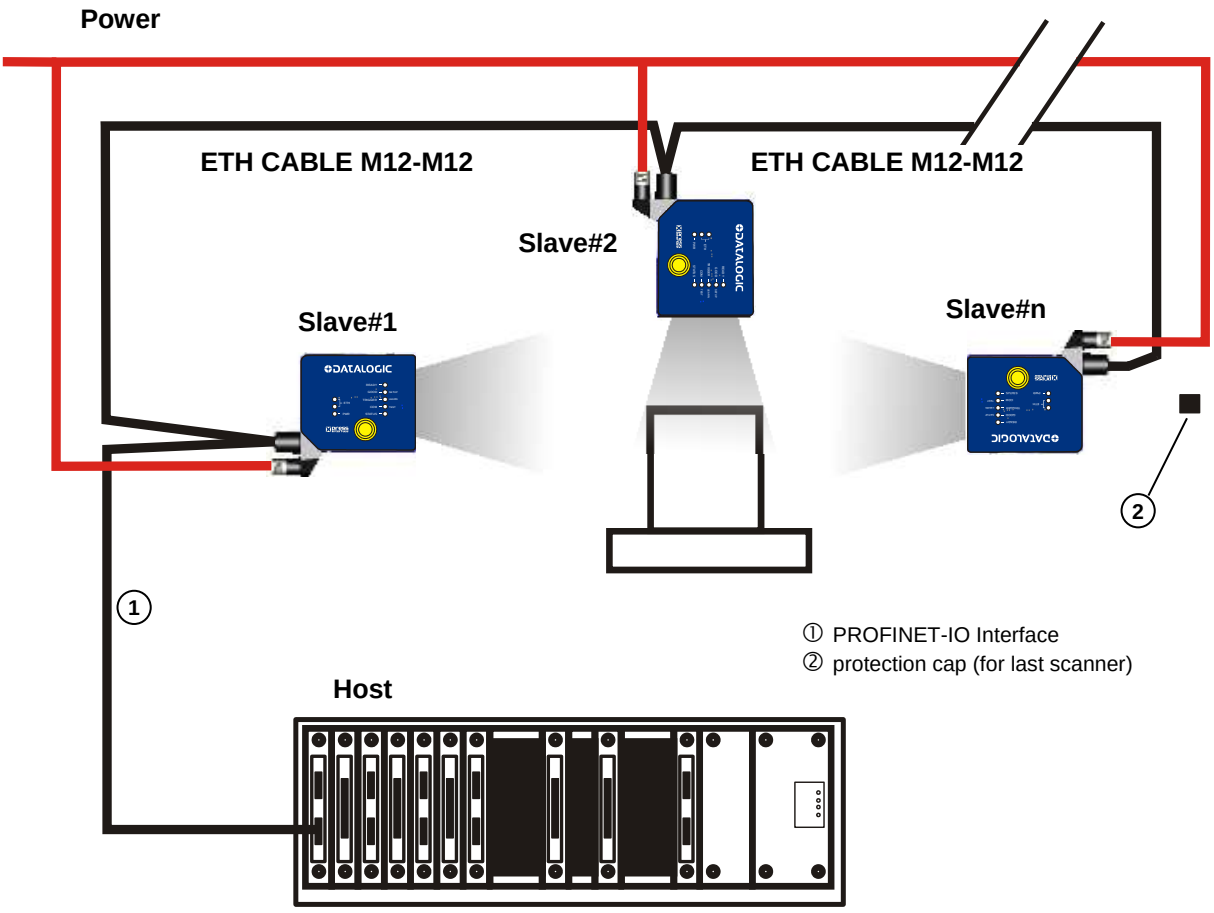

Figure 69 – PROFINET-IO Single Station Layout

5.3.2 Multi Station Layout

For a Multi Station layout the Host sends Serial Start/Stop “Trigger” signals to each scanner independently and each scanner sends its message to the Host computer.

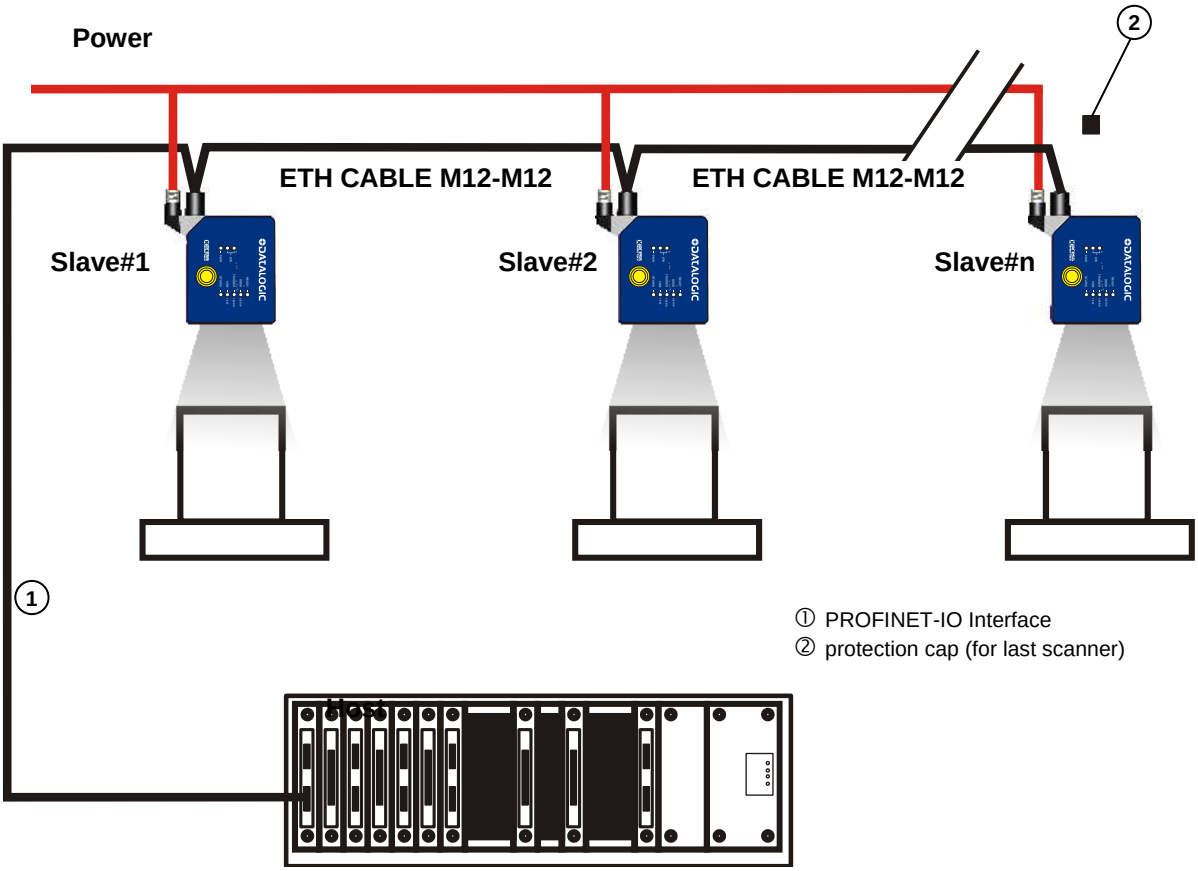

Figure 70 – PROFINET-IO Multi Station Layout

5.4 ID-NET™ SYNCHRONIZED NETWORKS

The ID-NET™ connection is used to collect data from several scanners to build a multi-point or a multi-sided reading system; there can be one master and up to 31 slaves connected together.

The slave scanners are connected together using the ID-NET™ interface. Every slave scanner must have a ID-NET™ address in the range 1-31.

The master scanner is also connected to the Host on the RS232/RS485 main serial interface.

For a Master/Slave Synchronized layout the External Trigger signal is unique to the system; there is a single reading phase and a single message from the master scanner to the Host computer. **It is not necessary to bring the External Trigger signal to all the scanners.**

The main, auxiliary, and ID-NET™ interfaces are connected as shown in the figure below.

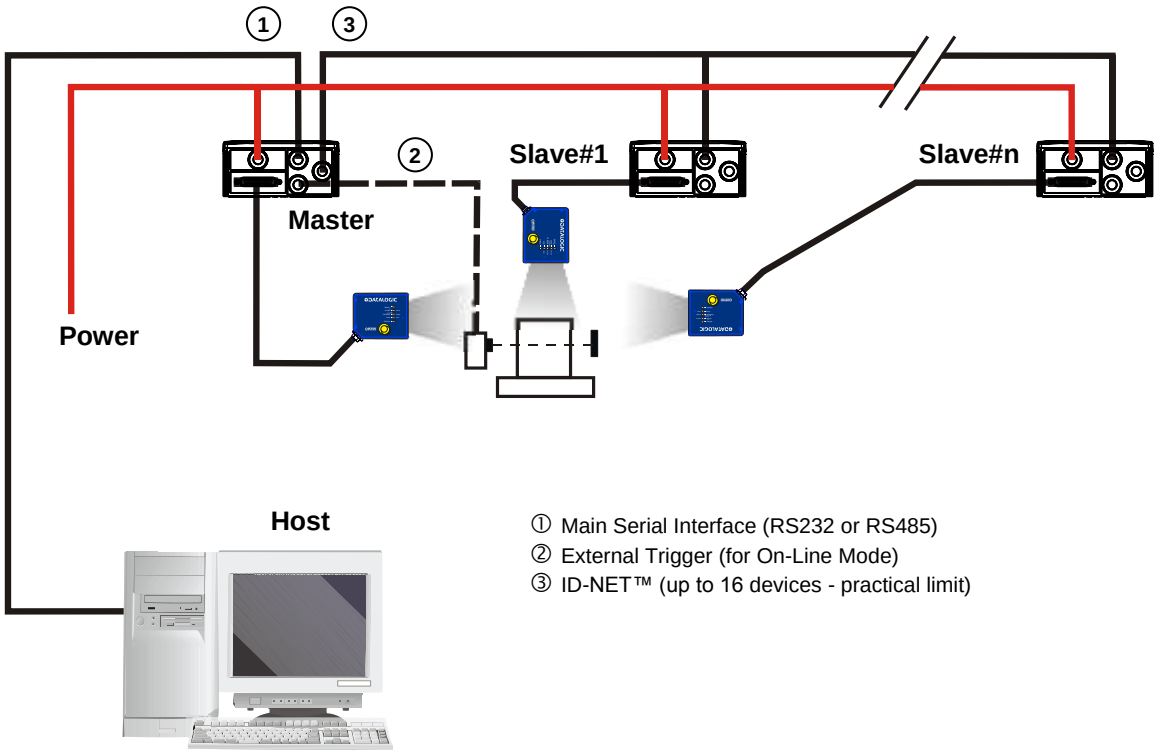

Figure 71 – ID-NET™ M/S Synchronized Layout

The Master scanner can be connected to the CBX series connection box (CBX + BM100 module) or to a QL500 having sw version 2.02.01 and later, with the advantage of the Backup and Restore configuration function.

NOTE: The auxiliary serial interface of the slave scanners can be used in Local Echo communication mode to control any single scanner (visualize collected data) or to configure it using the Genius™ utility or the Genius™ based Host Mode programming procedure.

The ID-NET™ termination resistor switches must be set to ON only in the first and last CBX connection box.

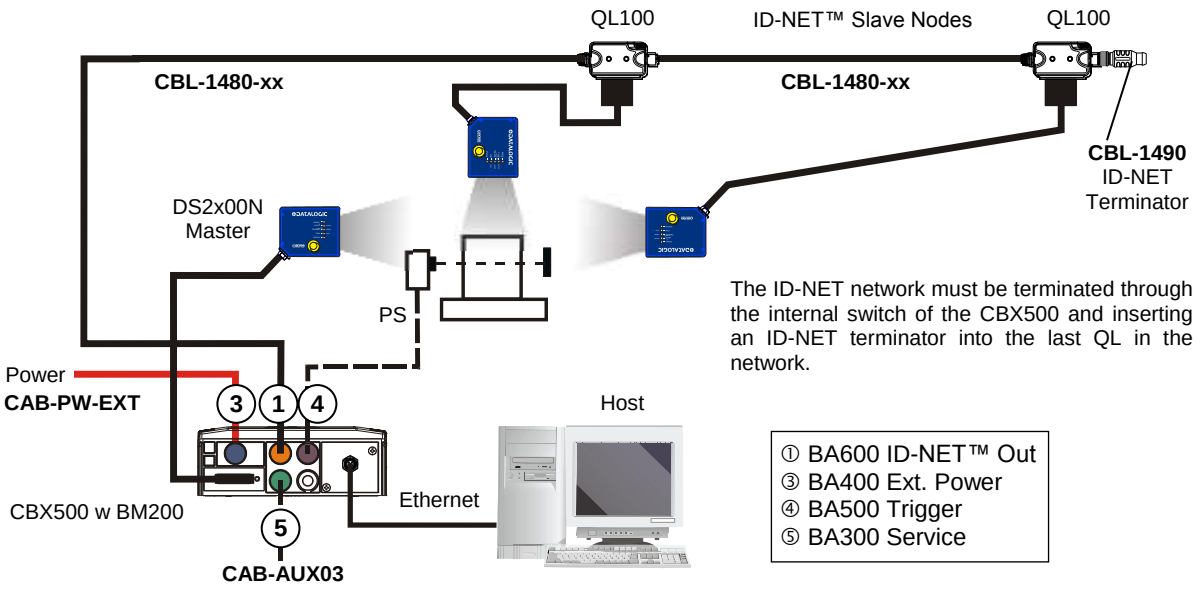

Figure 72 – ID-NET™ M/S Synchronized Layout
DS2x00N Master with CBX500 + DS2x00N Slaves with QL100

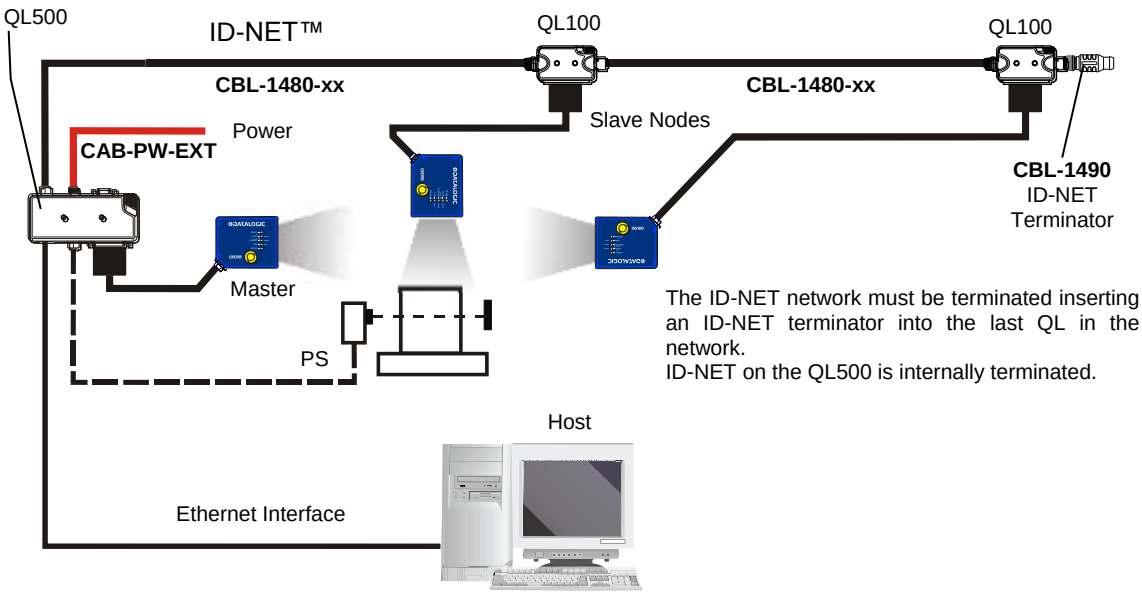

Figure 73 – ID-NET™ M/S Synchronized Layout
DS2x00N Master with QL500 + DS2x00N Slaves with QL100

The Master scanner can communicate to the Host as a Slave node on an Ethernet TCP/IP network. This example requires using the accessory BM2x0 Ethernet interface board installed inside the CBX500 connection box.

System configuration can be accomplished through the Auxiliary interface of the Master scanner (internal CBX500 9-pin connector) using the Genius™ configuration program or Genius™ based Host Mode programming.

Configuration can also be accomplished in Genius directly through the Ethernet network. In this case initial connection can be made using Programming Barcodes.

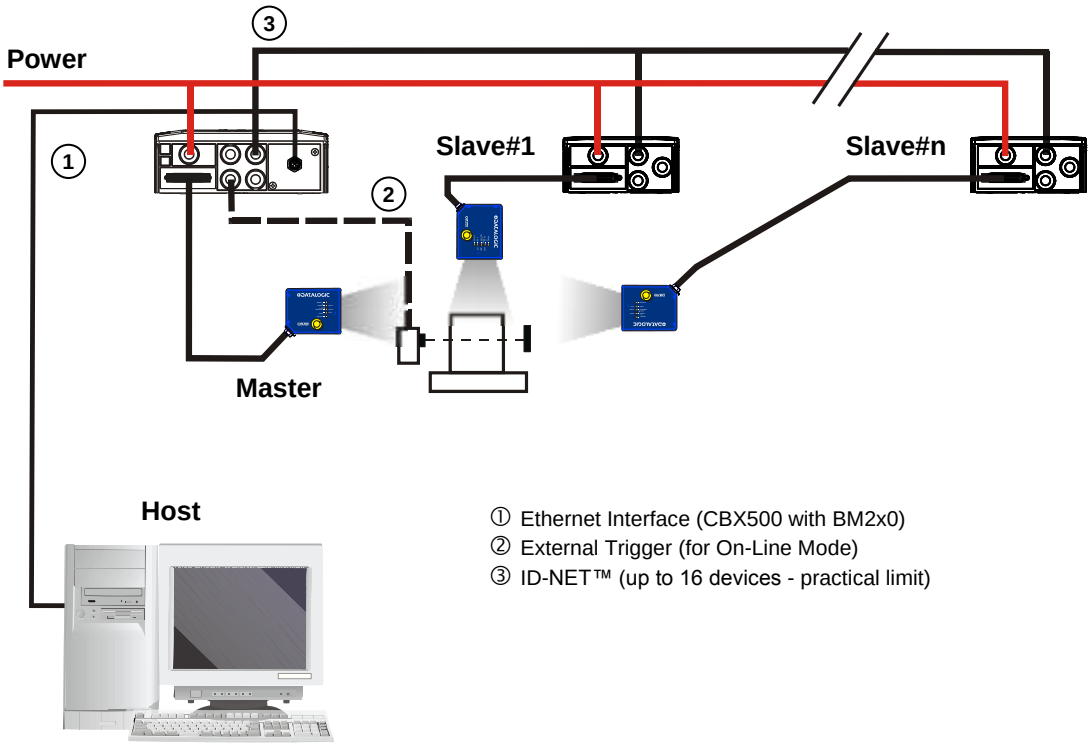

Figure 74 – ID-NET™ M/S Synchronized Layout
DS2x00N Master with BM200/210 TCP/IP Ethernet Interface to Host

Alternatively, the Master scanner can communicate to the Host as a Slave node on a Fieldbus network. This requires using an accessory Fieldbus interface board installed inside the CBX500 connection box.

System configuration can be accomplished through the Auxiliary interface of the Master scanner (internal CBX500 9-pin connector) using the Genius™ configuration program or Genius™ based Host Mode programming.

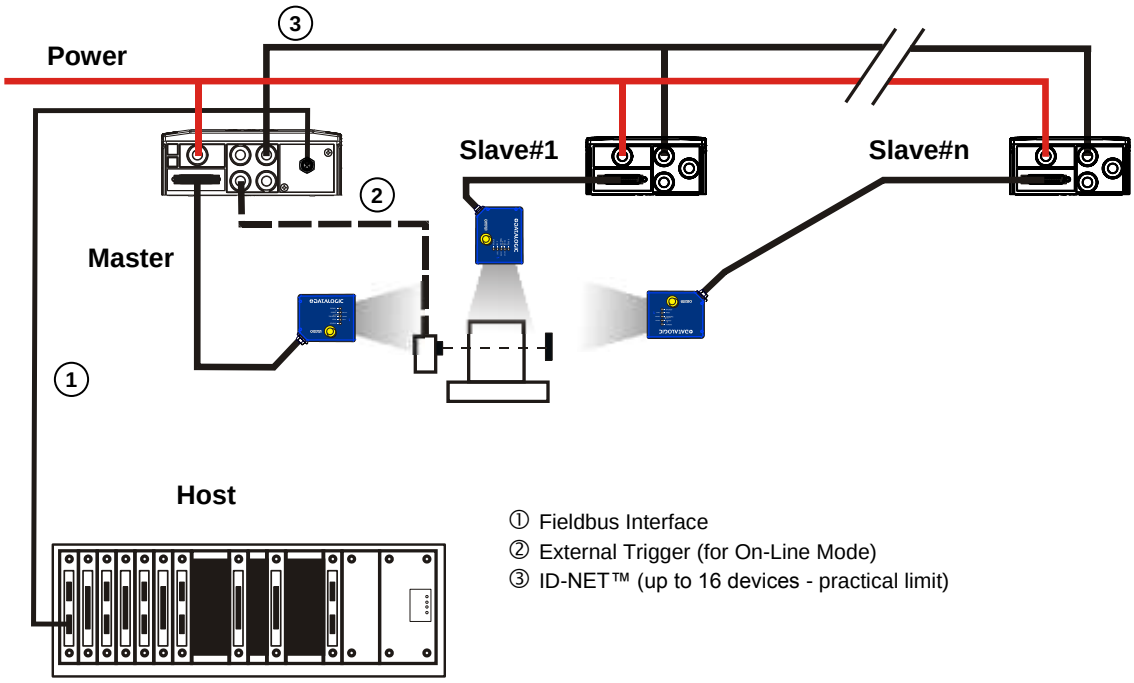

Figure 75 – ID-NET™ Fieldbus M/S Synchronized Layout

The QLM600 Profibus Gateway active connection module can also be used. System configuration can be accomplished through the Auxiliary interface of the Master scanner (QLM600 Aux connector) using the Genius™ configuration program or Genius™ based Host Mode programming.

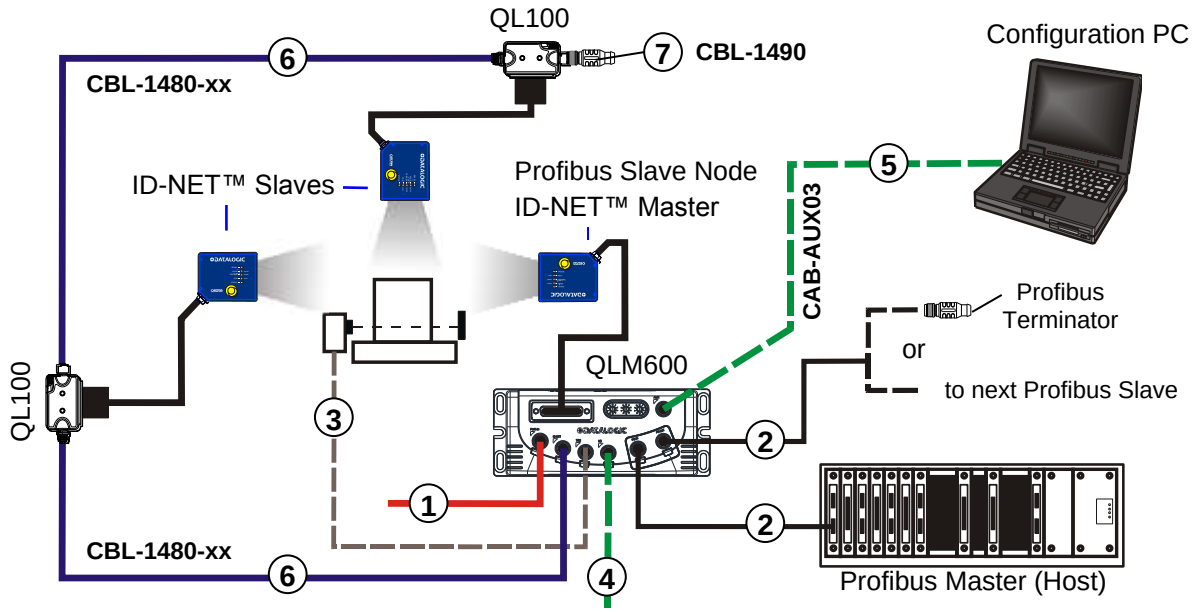

Figure 76 - ID-NET™ Synchronized Network - DS2100N Master with QLM600 + DS2100N Slaves with QL100s

① Input Power
② Profibus Interface
③ External Trigger (for On-Line Mode)
④ External Digital I/O Devices
⑤ Aux port for Reader Configuration
⑥ ID-NET™ Network
⑦ ID-NET Terminator

NOTE: The ID-NET network must be terminated inserting an ID-NET terminator into the last QL in the network. ID-NET on the QLM600 is internally terminated.

5.5 ID-NET™ MULTIDATA NETWORKS

For a Master/Slave Multidata layout each scanner has its own reading phase independent from the others; each single message is sent from the master scanner to the Host computer.

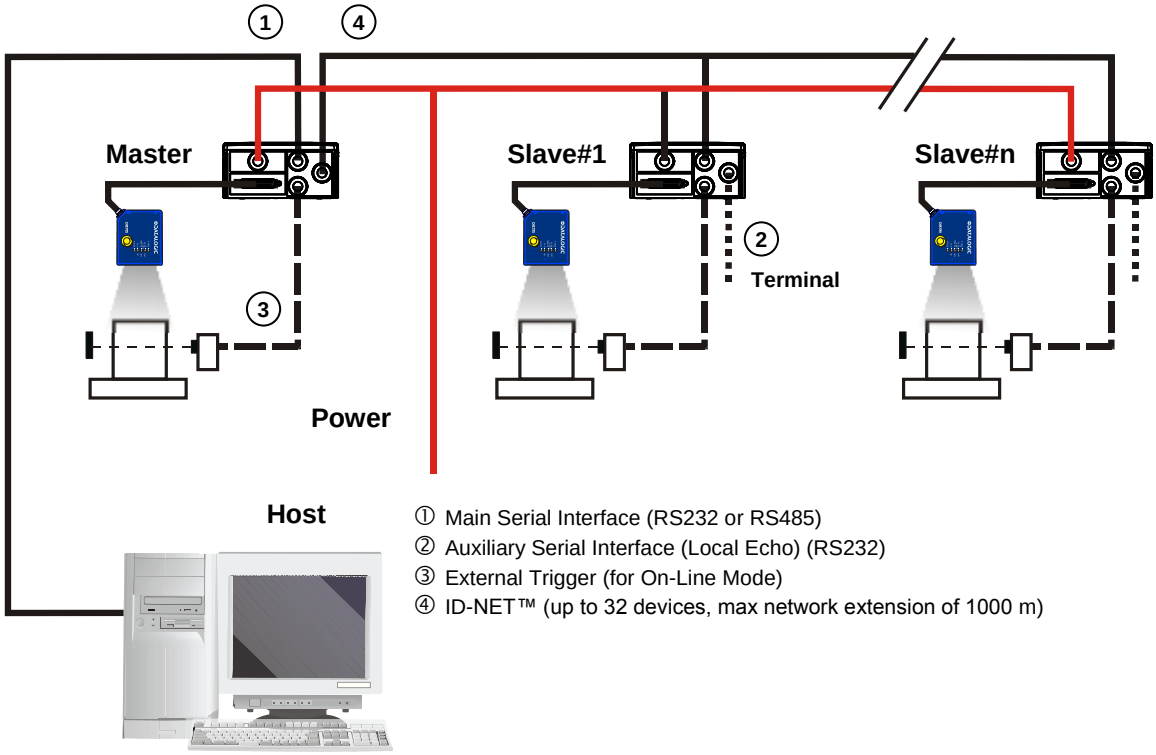

Figure 77 – ID-NET™ M/S Multidata with Serial Host

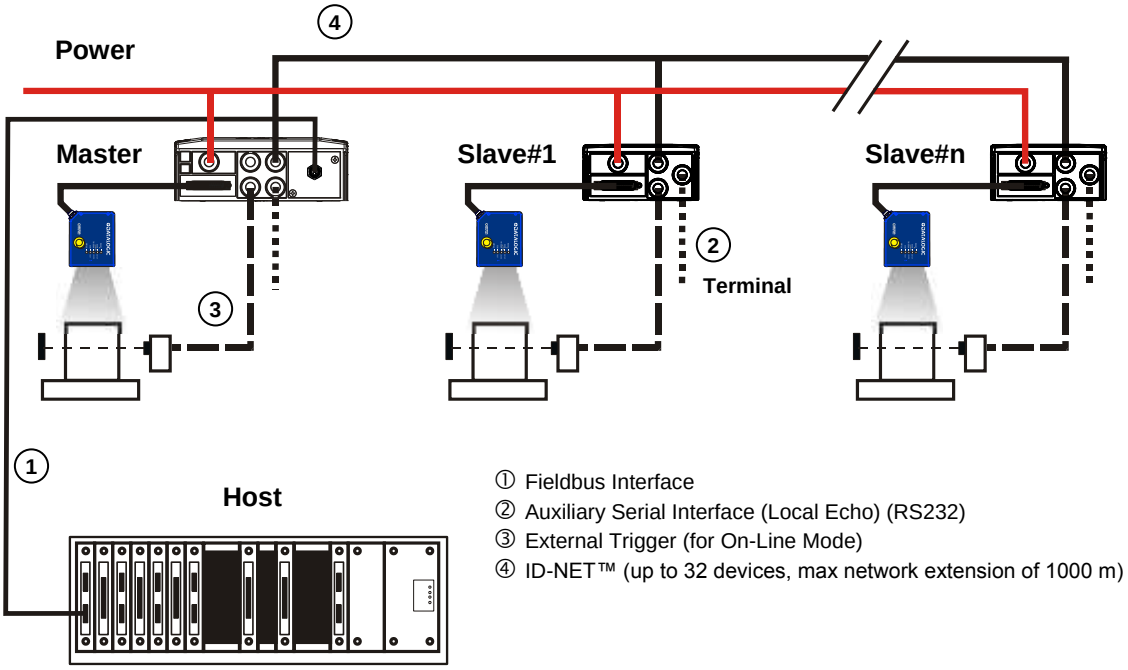

Figure 78 – ID-NET™ M/S Multidata with Fieldbus Host

5.6 PASS-THROUGH

An alternative Pass-Through layout allows the more efficient ID-NET™ network to be used. This layout is really an ID-NET Master/Slave Multidata layout which also allows **each** scanner (Master and Slaves) to accept input on the Auxiliary interface, for example to connect a device such as a hand-held reader for manual code reading capability.

Each scanner transmits its own messages plus any messages received by its Auxiliary interface onto the ID-NET™ interface. The Master passes all messages to the Host.

When On-Line Operating mode is used, the scanner is activated by an External Trigger (photoelectric sensor) when the object enters its reading zone.

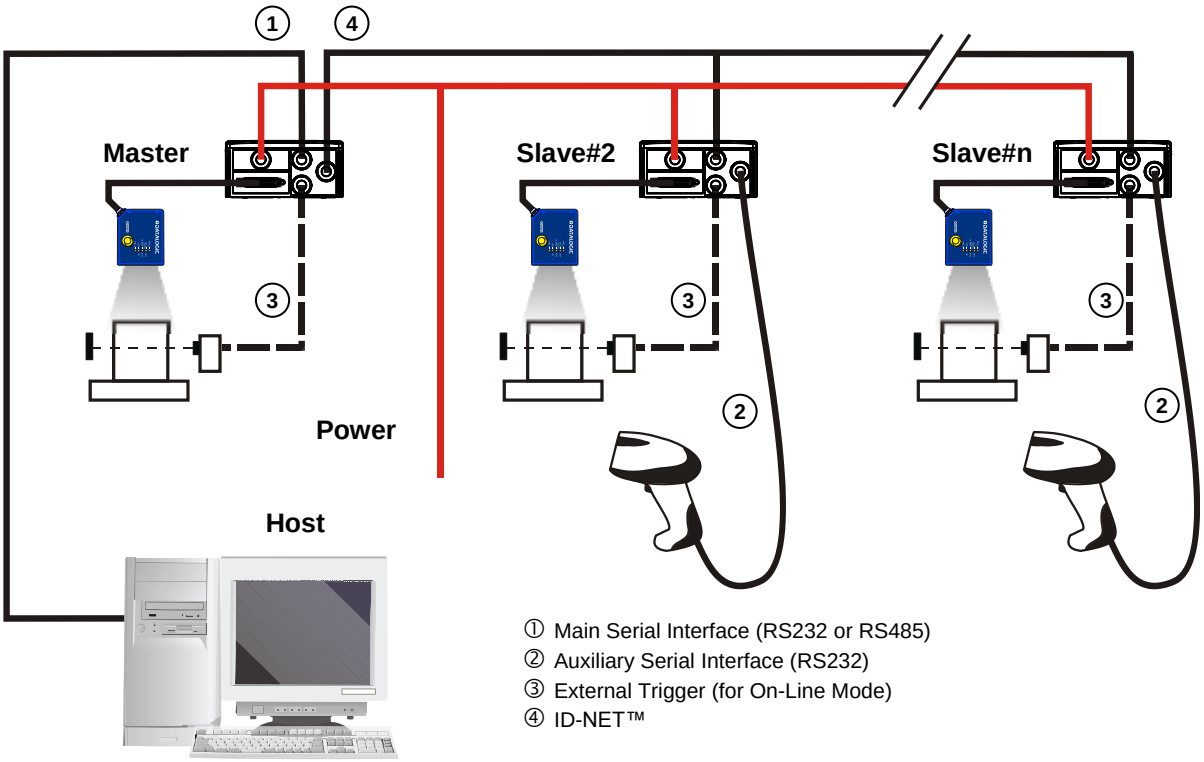

Figure 79 – Pass-Through On ID-NET™ Layout

NOTE: The Master scanner connected to the Host can be alternatively connected to a Fieldbus network using a Host Interface module through a CBX500 connection box.

5.7 OTHER LAYOUTS

NOTE: Other backward-compatible layouts are available such as: RS232 Master/Slave, RS232 Pass Through and Multiplexer. We recommend using the more efficient ID-NET™ network for Master/Slave or Multiplexer layouts.

6 READING FEATURES

6.1 ADVANCED CODE RECONSTRUCTION (ACR™-LITE)

The traditional way of barcode reading could be called “Linear Reading”. In this case, the laser beam crosses the barcode symbol from its beginning to its end as shown in the following figure:

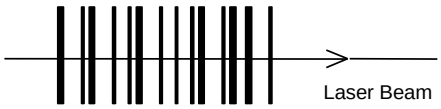

Figure 80 – Linear Reading

In Advanced Code Reconstruction mode it is no longer necessary for the laser beam to cross the label from the start to the end. With just a set of partial scans on the label (obtained using the motion of the label itself), the scanner is able to “reconstruct” the barcode. A typical set of partial scans is shown in the figure below:

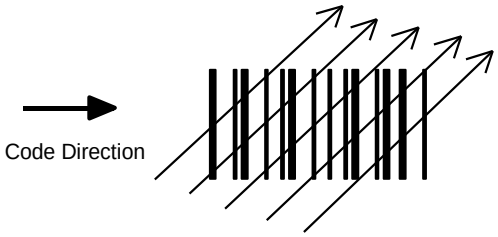

Figure 81 – Partial Scans

None of the partial scans contains the whole label. The decoder aligns each partial scan correctly and combines them in order to obtain the entire code.

The alignment is performed by calculating the time difference from one partial scan to another using a reference code element.

ACR-Lite therefore has an intrinsic ability to increase the reading percentage of damaged codes as in the examples below:

Figure 82 – ACR-Lite Readable Codes

ACR-Lite is disabled by default but can be enabled for the following code types:

- Code 25 Interleaved
- Code 39 Family
- Codabar
- GS1 DataBar
- Code 128/GS1-128
- EAN/UPC (without ADD-Ons)
- Code 93
- GS1 DataBar Expanded

6.1.1 Important ACR™-Lite Reading Conditions

- **Do not use ACR-Lite for omni-directional reading stations.**
- Code concatenation and ACR-Lite are not compatible and therefore cannot be enabled simultaneously.
- Stacked codes and ACR-Lite are not compatible.
- Codes shorter than 4 digits, while readable linearly, cannot be reconstructed in ACR-Lite.
- Reconstruction reading mode is not compatible with scanner Raster models.

NOTE: To maximize scanner performance in Advanced Code Reconstruction Reading applications:

- enable only the code symbologies that will actually be used in the application and disable any code symbologies that will not be used in the application
- reconstruct only one code label at a time

use conveyor speeds less than or equal to 1.0 m/s

6.1.2 Tilt Angle for Advanced Code Reconstruction

The most important parameter in Advanced Code Reconstruction is the value of the maximum tilt angle (α maximum) under which the code reconstruction process is still possible.

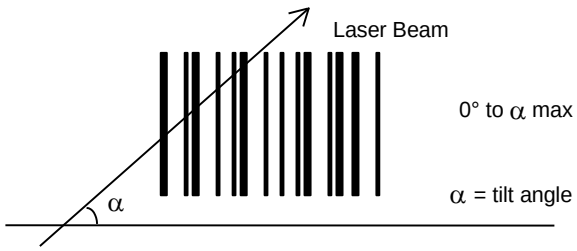

Figure 83 – Tilt Angle

The decoder will be able to read the label with a tilt angle between + α max and - α max as shown in the following figure:

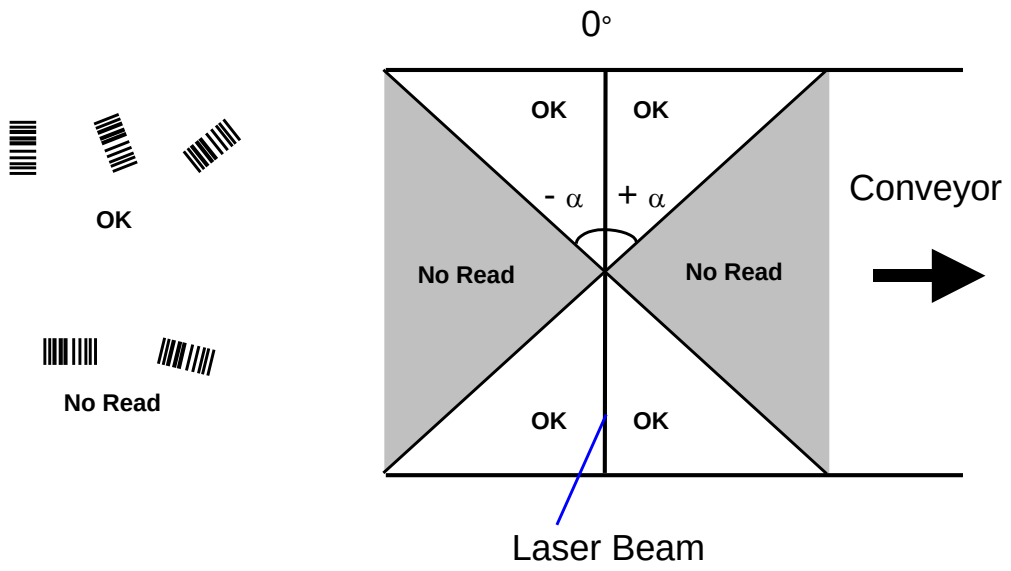

Figure 84 – Reading Zones with α Max

NOTE: While tilt angles of 45° can be obtained, DS2100N/DS2400N scanners are not designed to create omni-directional reading stations using two scanners in an X-pattern.

6.1.3 Advanced Code Reconstruction Reading Conditions

The following tables describe the minimum code height requirements (**in mm**) for standard ACR-Lite applications depending on the code symbology and the given reading conditions.

- ANSI Grade B minimum
- 800 scans/sec
- three code symbologies enabled simultaneously
- uniform background

2/5 Interleaved		**Minimum Code Height for ACR-Lite Reading (mm)**					
		45° max			**30° max**		
Conveyor Speed (m/s)		**0.5**	**.75**	**1**	**0.5**	**.75**	**1**
Code Resolution (mm)	**0.20**	17	20	23	12	14	16
	0.35	28	30	32	18	20	22
	0.50	34	36	38	23	25	27

Ratio 2.5:1

Table 1

Code 39		**Minimum Code Height for ACR-Lite Reading (mm)**					
		45° max			**30° max**		
Conveyor Speed (m/s)		**0.5**	**.75**	**1**	**0.5**	**.75**	**1**
Code Resolution (mm)	**0.20**	16	19	22	12	14	16
	0.35	26	28	30	17	19	21
	0.50	31	33	35	21	23	25

Ratio 2.5:1; Interdigit = Module Size

Table 2

Code 128 – GS1-128		**Minimum Code Height for ACR-Lite Reading (mm)**					
		45° max			**30° max**		
Conveyor Speed (m/s)		**0.5**	**.75**	**1**	**0.5**	**.75**	**1**
Code Resolution (mm)	**0.20**	12	15	18	9	11	14
	0.35	22	25	28	13	16	19
	0.50	25	27	30	17	20	23

Table 3

6.2 LINEAR CODE READING

The number of scans performed on the code by the scanner and therefore the decoding capability is influenced by the following parameters:

- number of scans per second
- code motion speed
- label dimensions
- scan direction with respect to code motion

At least 5 scans during the code passage should be allowed to ensure a successful read.

6.2.1 Step-Ladder Mode

If scanning is perpendicular to the code motion direction (Figure 85), the number of effective scans performed by the reader is given by the following formula:

SN = [(LH/LS) ∗ SS] – 2

Where:
SN = number of effective scans
LH = label height (in mm)
LS = label movement speed in (mm/s)
SS = number of scans per second

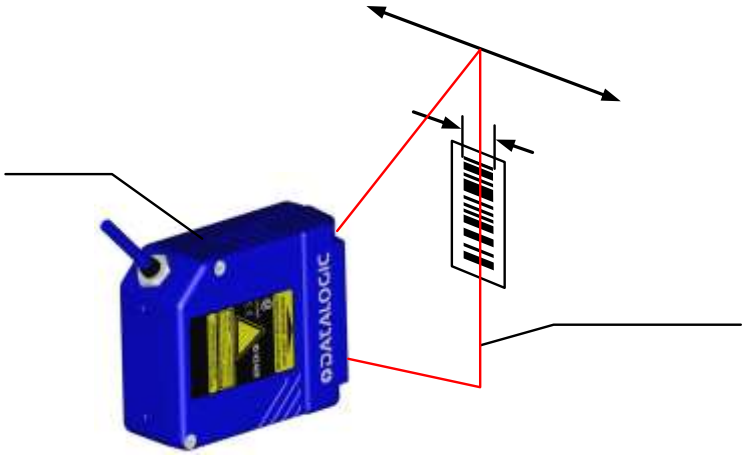

Figure 85 - "Step-Ladder" Scanning Mode

For example, the DS2400N (800 scans/sec.) for a 25 mm high code moving at 1250 mm/s performs:

[(25/1250) ∗ 800] - 2 = 14 effective scans.

6.2.2 Picket-Fence Mode

If scanning is parallel to the code motion, (Figure 86), the number of effective scans is given by the following formula:

SN = [((FW-LW)/LS) ∗ SS] -2

Where:
SN = number of effective scans
FW = reading field width (in mm)
LW = label width (in mm)
LS = label movement speed (in mm/s)
SS = scans per second

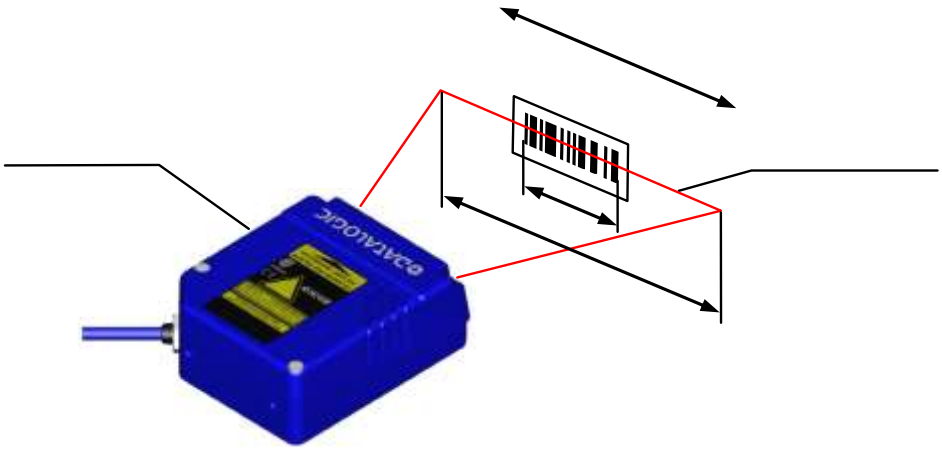

Figure 86 - "Picket-Fence" Scanning Mode

For example, for a 100 mm wide code moving in a point where the reading field is 200 mm wide at a 2000 mm/s speed, the DS2400N (800 scans per sec.), performs:

[((200-100)/2000) ∗ 800] - 2 = 38 effective scans

6.3 PERFORMANCE

The DS2100N scanner is available in different versions according to the reading performance.

Version	Max Code Resolution	Speed
	mm (mils)	scans/s
1XX0	0.20 (8)	500 to 800
1XX4	0.15 (6)	800 to 1000
2XX0	0.15 (6)	500 to 800
2XX4	0.12 (5)	800 to 1000

Version	Reading Distance
1XX0	40 mm (1.6 in) - 300 mm (11.8 in) on 0.50 mm (20 mils) codes
1XX4	50 mm (1.8 in) - 310 mm (11.8 in) on 0.50 mm (20 mils) codes
2XX0	30 mm (1.2 in) - 90 mm (3.5 in) on 0.30 mm (12 mils) codes
2XX4	45 mm (1.8 in) - 100 mm (3.9 in) on 0.20 mm (8 mils) codes

The DS2400N scanner is available in different versions according to the reading performance.

Version	Max Code Resolution	Speed
	mm (mils)	scans/s
0XXX	0.20 (8)	600 to 1000
1XXX	0.25 (10)	600 to 1000
2XXX	0.35 (14)	600 to 1000

Version	Reading Distance
0XXX	75 mm (3 in) - 340 mm (13.4 in) on 0.35 mm (14 mils) codes
1XXX	100 mm (3.9 in) - 440 mm (17.3 in) on 0.50 mm (20 mils) codes
2XXX	190 mm (7.5 in) - 600 mm (23.6 in) on 0.50 mm (20 mils) codes

Refer to the diagrams given in par. 6.4 for further details on the reading features. They are taken on various resolution sample codes at a 25 °C ambient temperature, depending on the conditions in the notes under the diagrams.

6.3.1 Raster

Raster versions are available. The distance between the top and bottom scan lines is called capture and is measured from the laser beam output window.

The reading characteristics for the raster versions are given in the table below.

	Reading Distance	
	300 mm (11.8 in)	**600 mm (23.6 in)**
Raster Capture	18 mm (0.7 in)	35 mm (1.4 in)

If standard devices do not satisfy specific requirements, contact your nearest Datalogic distributor, supplying code samples, to obtain complete information on the reading possibilities.

6.4 READING DIAGRAMS

6.4.1 DS2100N

Reading diagrams for Subzero models and Standard models are the same.
DS2100N-1X00 (Standard Resolution)

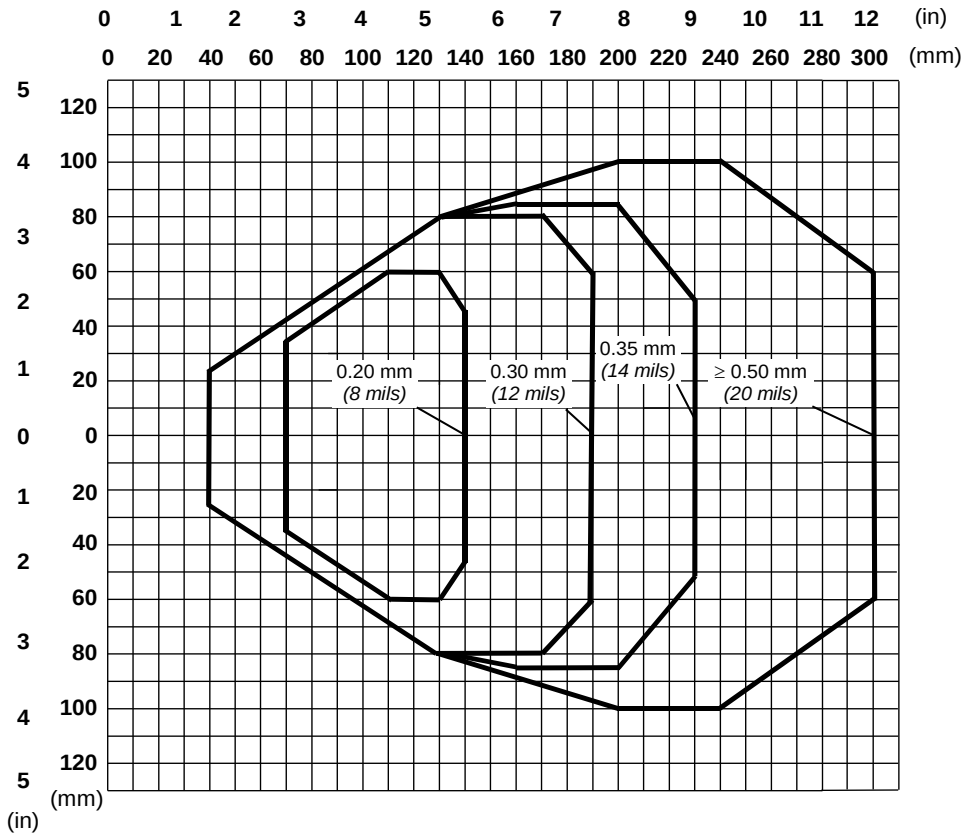

(0,0) is the center of the laser beam output window.

CONDITIONS

Optic Version	=	Linear
Code	=	Interleaved 2/5 or Code 39
PCS	=	0.90
"Pitch" angle	=	0°
"Skew" angle	=	15°
"Tilt" angle	=	0°
*Reading Conditions	=	Standard
*Scan Speed	=	500 scans/sec

* Parameter selectable in Genius™

DS2100N-1X00
Reading Distance vs Scanning Speed

DS2100N-2X00 (High resolution)

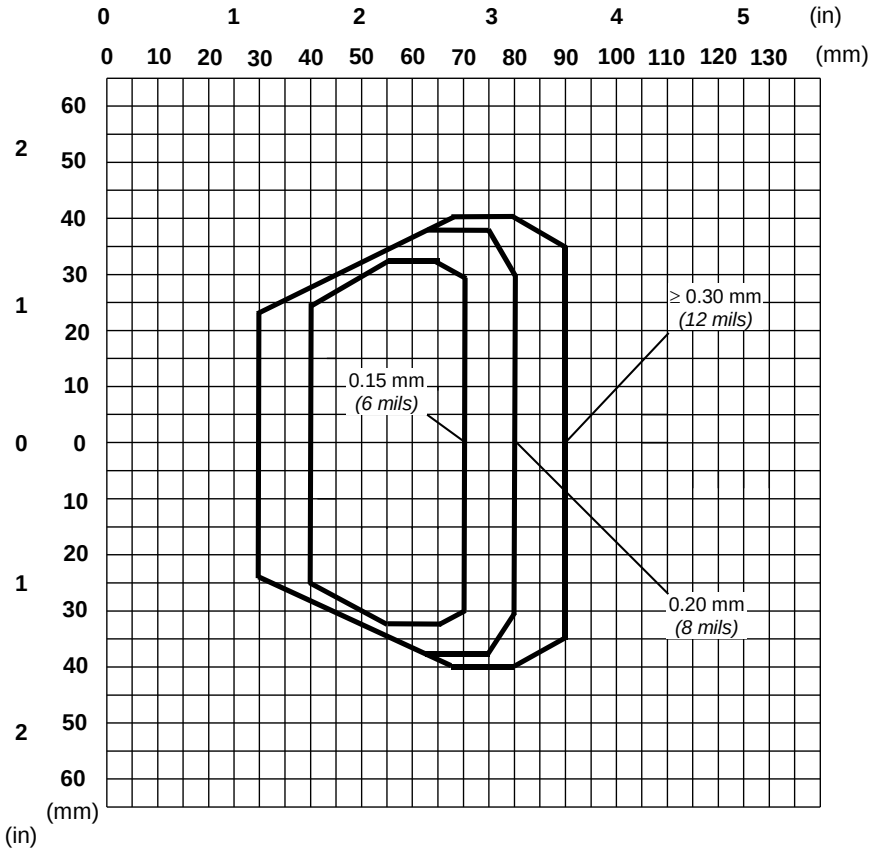

(0,0) is the center of the laser beam output window.

CONDITIONS

Optic Version	=	Linear
Code	=	Interleaved 2/5 or Code 39
PCS	=	0.90
"Pitch" angle	=	0°
"Skew" angle	=	15°
"Tilt" angle	=	0°
*Reading Conditions	=	Standard
*Scan Speed	=	500 scans/sec

* Parameter selectable in Genius™

DS2100N-2X00
Reading Distance vs Scanning Speed

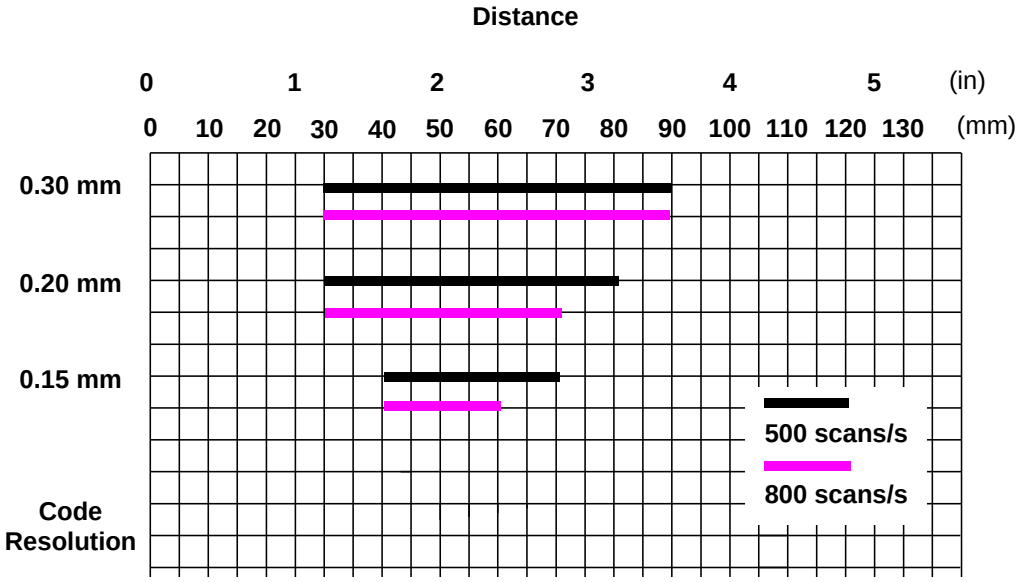

DS2100N-1X04 High Performance (Standard Resolution)

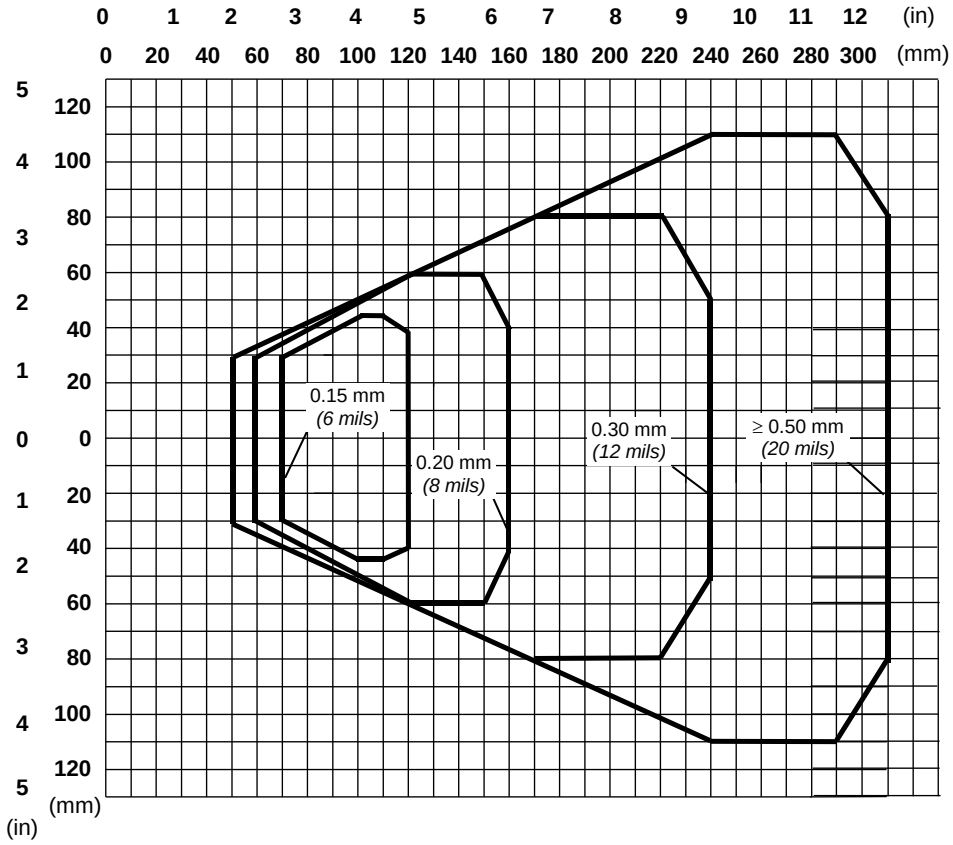

(0,0) is the center of the laser beam output window.

CONDITIONS

Optic Version	=	Linear
Code	=	Interleaved 2/5 or Code 39
PCS	=	0.90
"Pitch" angle	=	0°
"Skew" angle	=	15°
"Tilt" angle	=	0°
*Code Resolution	=	High for 0.30 mm, (12 mils) codes and smaller Standard for 0.50 mm (20 mils) codes and greater
*Reading Conditions	=	Standard
*Scan Speed	=	1000 scans/sec

* Parameter selectable in Genius™

DS2100N-2X04 High Performance (High Resolution)

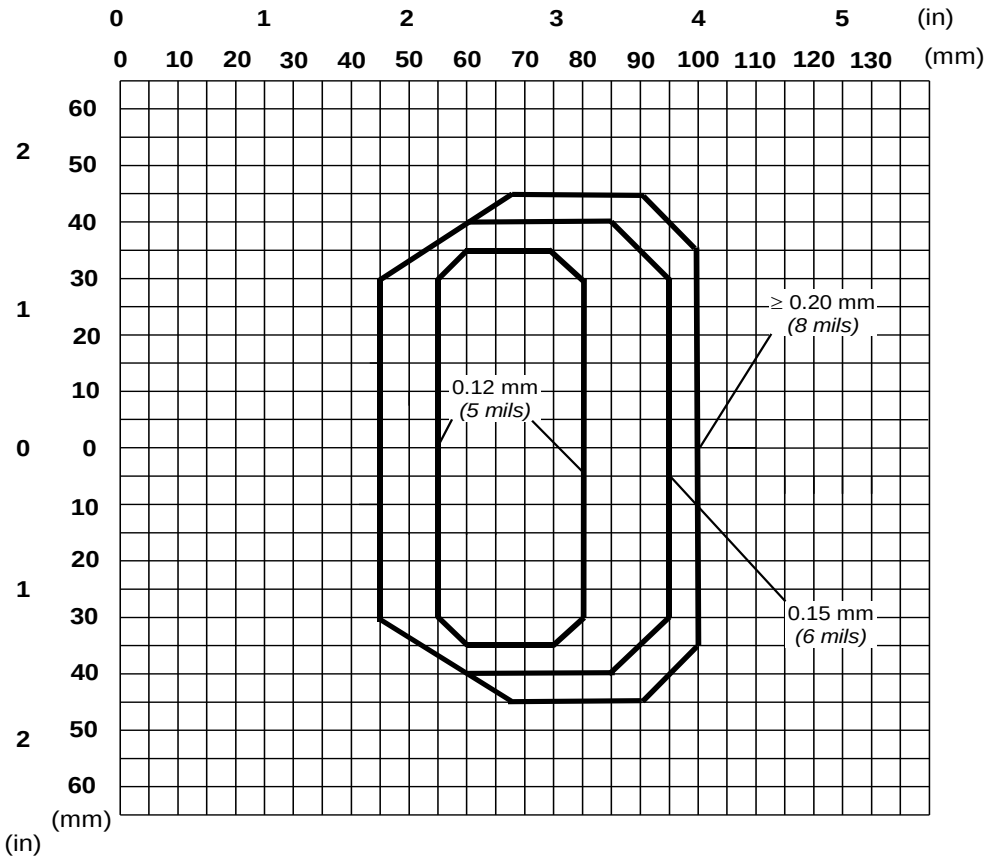

(0,0) is the center of the laser beam output window.

CONDITIONS

Optic Version	=	Linear
Code	=	Interleaved 2/5 or Code 39
PCS	=	0.90
"Pitch" angle	=	0°
"Skew" angle	=	15°
"Tilt" angle	=	0°
*Code Resolution	=	High for 0.15 mm, (6 mils) codes and smaller Standard for 0.20 mm (8 mils) codes
*Reading Conditions	=	Standard
*Scan Speed	=	1000 scans/sec

* Parameter selectable in Genius™

6.4.2 DS2400N

Reading diagrams for Subzero models and Standard models are the same.

DS2400N-0X0X (Short Reading Range)

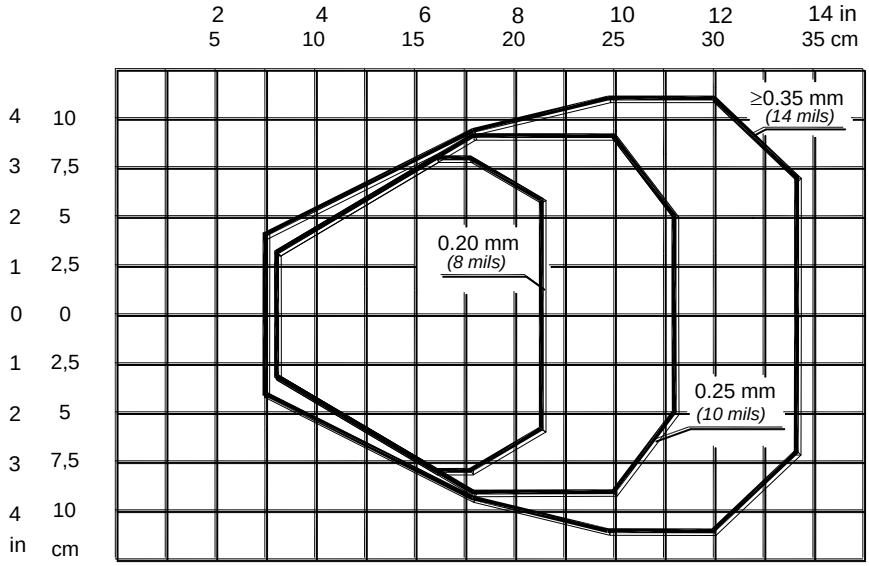

(0,0) is the center of the laser beam output window.

CONDITIONS

Optic Version	=	Linear
Code	=	Interleaved 2/5 or Code 39
PCS	=	0.90
"Pitch" angle	=	0°
"Skew" angle	=	10°
"Tilt" angle	=	0°
*Code Resolution	=	High
*Reading Conditions	=	Standard
*Scan Speed	=	800 scans/sec

* Parameters selectable in Genius™.

DS2400N-1X0X (Medium Reading Range)

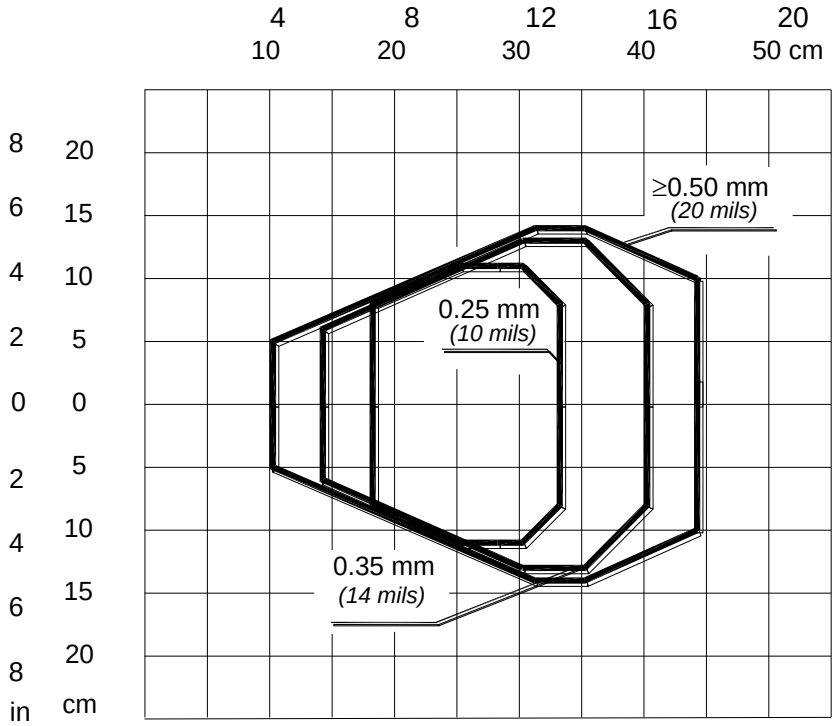

(0,0) is the center of the laser beam output window.

CONDITIONS

Optic Version	=	Linear
Code	=	Interleaved 2/5 or Code 39
PCS	=	0.90
"Pitch" angle	=	0°
"Skew" angle	=	10°
"Tilt" angle	=	0°
*Code Resolution	=	High for 0.25 mm (10 mils) codes Standard for 0.35 mm, (14 mils) codes and greater
*Reading Conditions	=	Standard
*Scan Speed	=	800 scans/sec

* Parameters selectable in Genius™.

DS2400N-2X0X (Long Reading Range)

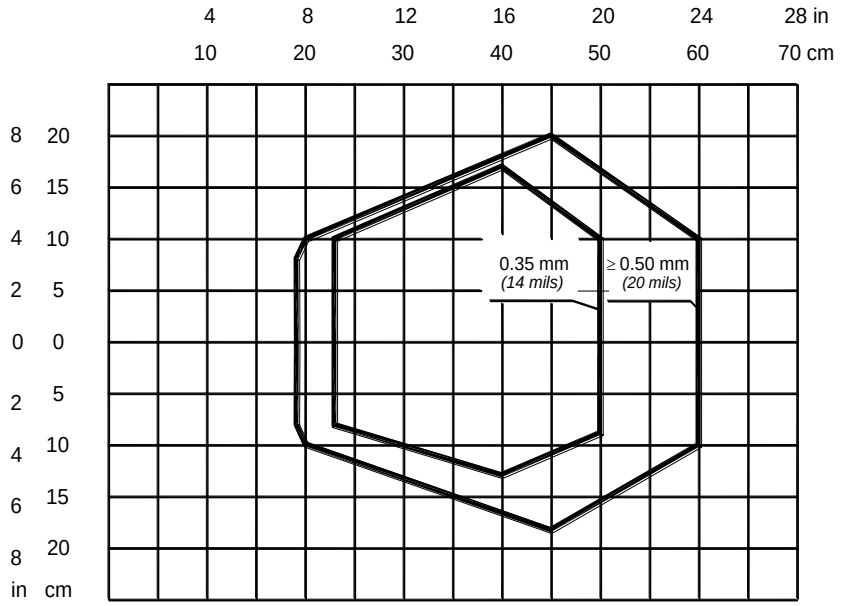

(0,0) is the center of the laser beam output window.

CONDITIONS

Optic Version	=	Linear
Code	=	Interleaved 2/5 or Code 39
PCS	=	0.90
"Pitch" angle	=	0°
"Skew" angle	=	10°
"Tilt" angle	=	0°
*Code Resolution	=	High for 0.35 mm (14 mils) codes
	=	Standard for 0.50 mm (20 mils) codes and greater
*Reading Conditions	=	Standard
*Scan Speed	=	800 scans/sec

* Parameter selectable in Genius™

7 MAINTENANCE

7.1 CLEANING

Clean the laser beam output window periodically for continued correct operation of the reader.

Dust, dirt, etc. on the window may alter the reading performance.

Repeat the operation frequently in particularly dirty environments.

Use soft material and alcohol to clean the window and avoid any abrasive substances.

WARNING: Clean the Laser Beam Output Window when the scanner is turned off or, at least, when the laser beam is deactivated.

8 TROUBLESHOOTING

8.1 GENERAL GUIDELINES

When wiring the device, pay careful attention to the signal name (acronym) on the CBX100/500 spring clamp connectors (chp. 4). If you are connecting directly to the scanner 25-pin connector pay attention to the pin number of the signals (Appendix A).

If you need information about a certain reader parameter you can refer to the Genius™ program help files.

Either connect the device and select the parameter you're interested in by pressing the F1 key, or select **Help/Parameters Help/2K_4K Software Configuration Parameters Guide** from the command menu.

If you're unable to fix the problem and you're going to contact your local Datalogic office or Datalogic Partner or ARC, we suggest providing (if possible) the Device Configuration files (*.ddc). Connect through Genius™ and click the Save icon from the toolbar. Also note the exact Model, Serial Number and Order Number of the device.

TROUBLESHOOTING GUIDE	
Problem	**Suggestions**
Power On: the "Power On"/ "Ready" LED are not lit	Is power connected? If using a power adapter (like PG 6000), is it connected to a wall outlet? If using rail power, does rail have power? If using CBX100, does it have power (check switch and LED)? Measure voltage either at pin 13 and pin 25 (for 25-pin connector) or at spring clamp Vdc and GND (for CBX).
Power On: the "Ready" LED is continuously blinking; motor and laser are OFF	For Subzero models this indicates the warm-up phase. If this phase exceeds the expected warm-up time, a diagnostic error condition will be generated, see indication below. Check the input voltage; if less than 24 Vdc the scanner may not attain warm-up.
Diagnostic Error: the "Ready" LED and "Status" LED are continuously blinking and the "Good" Read LED is ON	This indicates a diagnostic alarm/error condition. A User Defined Error message or an Internal Numeric Error message is sent over the selected communication interface. See the Help On Line for diagnostic error conditions.
On line Mode: TRIGGER LED is not lit (when external trigger activates)	Is sensor connected to I1A, I1B spring clamps (for CBX) or to pins 18 and 19 (for 25-pin connector)? Is power supplied to photo sensor? Are the photo sensor LEDS (if any) working correctly? Is the sensor/reflector system aligned?
On line Mode: TRIGGER LED is correctly lit but nothing happens (no reading results)	Is the software configuration consistent with the application condition (operating mode etc.)? In the Genius™ program select the Operating Mode branch and check for related parameters.
Serial On line Mode: the reader is not triggered (no reading results)	In the Genius™ program select the Operating Mode branch and check if Serial On Line is selected in the On Line Options. Are the Start – Stop characters correctly assigned? Is the serial trigger source correctly connected and configured?
On line Mode and Serial On Line: Reader doesn't respond correctly to the expected external signals end	In the Genius™ program select the Operating Mode branch and check the Reading Phase Timeout parameterization.
X-PRESS™: X-PRESS™ functions don't work. LEDs light up but do not allow access to the functions.	The X-PRESS™ functions don't work if the scanner motor or laser are turned off. Check if the motor or laser are turned off through the following parameters: • Beam Shutter = enabled • Scan Speed = Motor Off • Energy Saving>Serial Motor Off has been sent

TROUBLESHOOTING GUIDE	
Problem	**Suggestions**
Reading: Not possible to read the target barcode (always returns No Read) or the Auto Setup procedure Fails.	Check synchronization of reading pulse with object to read: Is the scan line correctly positioned? Place barcode in the center of scan line and run Test mode (selectable by Genius™ as an Operating Mode). If you still have trouble, check the following: • Is the reading distance within that allowed (see reading diagrams)? • Is the Tilt angle too large? • Is the Skew angle less than 10° (direct reflection)? • Choose the Code Definition branch and enable different Code Symbologies (except Pharmacode). Length = Min and Max (variable). • Is the Bar Code quality sufficient? If you had no success, try to perform the test using the BARCODE TEST CHART included with the product.
Communication: Device is not transmitting anything to the host	• Is the serial cable connected? • Is the correct wiring respected? • Are serial host settings equivalent to the serial device setting? • If using CBX, be sure the RS485 termination switch is positioned to OFF.
Communication: Data transferred to the host are incorrect, corrupted or incomplete	• In the Genius™ program select the Data Communication Settings/Data Format/Standard Parameters branch and check the Header, Separators, and Terminator values • Also check the Code Field Length and Fill Character values. • Are the COM port parameters correctly assigned?
Communication: Always returns the Reader Failure Character (<BEL> char as default)	• Contact your local Datalogic office or Datalogic Partner or ARC, because either a Motor or Laser failure has occurred. • Note the exact model and Serial Number of the device.
How do I obtain my units' serial numbers?	• The device's serial number is printed on a label that is affixed to the body of the reader. • Serial numbers consist of 9 characters: one letter, 2 numbers, and another letter followed by 5 numbers.

9 TECHNICAL FEATURES

ELECTRICAL FEATURES	DS2100N-xxx0 (Standard)	DS2100N-xxx4 (HP)	DS2400N-xxx0 (Standard)	DS2400N-xxx5 (Subzero)
Input Power				
Supply Voltage	10 to 30 Vdc	10 to 30 Vdc	10 to 30 Vdc	24 Vdc ±10%
Power consumption max.	0.3 to 0.12 A; 3 W	0.5 to 0.17 A; 5 W	0.5 to 0.17 A; 5 W	0.4 A; 9.6 W
Communication Interfaces				
Main Serial Interface	Software programmable: RS232; RS485 FD and HD			
Baudrate	1200 - 115200			
Auxiliary	RS232			
Baudrate	1200 - 115200			
ID-NET™	RS485 Half-duplex			
Baudrate	Up to 1 MBaud			
Ethernet (Built-in)	10/100 Mbit/s (supports application protocols: TCP/IP, EtherNet/IP, Modbus TCP)			
Profinet-IO	100 Mbit/s (supports TCP/IP application protocol)			
Inputs				
Input 1 (External Trigger), Input 2	Optocoupled, polarity insensitive			
Voltage	10 to 30 Vdc			
Current Consumption	12 mA max.			
Minimum Pulse Duration	5 ms.			
Outputs for x2xx models				
Output 1, Output 2	Optocoupled			
V_{CE}	30 Vdc max.			
Collector Current	40 mA continuous max.; 130 mA pulsed max.			
$V_{CE\ saturation}$	1V max. at 10 mA			
Power Dissipation	80 mW max. at 45 °C (ambient temperature)			
Outputs for x3xx and x4xx models				
Output 1, Output 2	Non Opto-isolated but reverse polarity short-circuit protected			
V_{OUT} (I_{LOAD} = 0 mA)	30 Vdc max.			
V_{OUT} (I_{LOAD} = 100 mA)	3 Vdc max.			
I_{LOAD}	100 mA max.			
OPTICAL FEATURES				
Light Source	Semiconductor laser diode			
Wave Length	In the range 630 to 680 nm			
Safety Class	Class 2 - EN 60825-1; CDRH			
READING FEATURES ①				
Scan Rate (software program.)	(500 to 800 scans/sec)	(800 to 1000 scans/sec)	(600 to 1000 scans/sec)	(600 to 1000 scans/sec)
Aperture Angle	50°			
Maximum Reading Distance Maximum Resolution	See reading diagrams			

① Further details given in par. **6.3**

ENVIRONMENTAL FEATURES		
ELECTRICAL FEATURES	**All models except Subzero**	**Subzero models**
Operating Temperature	0° to +45 °C (+32° to +113 °F) ②	-35° to +45 °C (-31° to +113 °F) ③
Storage Temperature	-20° to +70 °C (-4° to +158 °F)	-35° to +70 °C (-31° to +158 °F)
Humidity max.	90% non condensing	
Vibration Resistance ④ EN 60068-2-6	14 mm @ 2 to 10 Hz; 1.5 mm @ 13 to 55 Hz; 2 g @ 70 to 500 Hz; 2 hours on each axis	
Bump Resistance EN 60068-2-29	30g; 6 ms; 5000 shocks on each axis	
Shock Resistance EN 60068-2-27	30g; 11 ms; 3 shocks on each axis	
Protection Class – EN 60529	IP65	
PHYSICAL FEATURES		
Mechanical Dimensions		
Serial models	68 x 84 x 34 mm (2.7 x 3.3 x 1.3 in)	
Ethernet models connector = 0° Ethernet models connector = 90°	104 x 69 x 38 mm (4.1 x 2.7 x 1.5 in) 84 x 89 x 38 mm (3.3 x 3.5 x 1.5 in)	
Profinet models connector = 0° Profinet models connector = 90°	104 x 86 x 38 mm (4.1 x 3.4 x 1.5 in) 101 x 89 x 38 mm (4.0 x 3.5 x 1.5 in)	
Weight		
Serial models	330 g (11.6 oz.)	
Ethernet models	281 g (10 oz.)	
Profinet models	308 g (10.9 oz.)	
Subzero models	340 g (12 oz.)	

② If the reader is used in high temperature environments (over 40 °C), use of the Beam Shutter is advised (see the Genius™ configuration program) and/or a thermally conductive support (such as the metal bracket provided).

③ The Operating Temperature is guaranteed under the following conditions:

- no direct ventilation on the scanner
- fixed working environment (no rapid temperature changes)

At -35 °C, a 20 min warm-up period is required before the scanner is ready to read barcodes.

④ Product not installed on provided bracket.

SOFTWARE FEATURES	
READABLE CODES *EAN/UPC (including Add-on 2 and Add-on 5) *2/5 Interleaved *Code 39 (Standard and Full ASCII) *Codabar ABC Codabar *GS1 DataBar *GS1 DataBar Expanded *Code 93 *Code 128 *GS1-128 (ex EAN 128) ISBT 128 Pharmacode Plessey GS1 DataBar Limited *ACR-Lite Readable.	
Code Selection	up to ten different symbologies during one reading phase
Decoding Safety	can enable multiple good reads of same code
Headers and Terminators	Up to 128-byte header string Up to 128-byte terminator string
Operating Modes	On-Line, Serial On-Line, Verifier, Automatic, Continuous, Test
Configuration Modes	X-PRESS™ Functions Genius™ utility program Genius™ based Host Mode Programming
Special Functions	Code Verifier ACR-Lite (Advanced Code Reconstruction) Motor Off and SW_Speed Control Programmable Diagnostic and Statistical Messages
Parameter Storage	Non-volatile internal Flash
USER INTERFACE	
LED Indicators Multi-function Key	Ready, Good, Trigger, Com, Status, Power On, Ethernet/Profinet X-PRESS™ button

A ALTERNATIVE CONNECTIONS FOR SERIAL MODELS

The connector pinouts and notes given in this appendix are for custom cabling applications.

POWER, COM AND I/O CONNECTOR

The scanner is equipped with a cable ending in a 25-pin male D-sub connector for connection to the power supply, serial interfaces and input/output signals. The details of the connector pins are indicated in the following table:

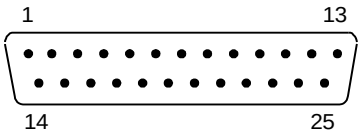

Figure 87 - 25-pin Male D-sub Connector

25-pin D-sub male connector pinout				
Pin	**Name**	**Function**		
13, 9	Vdc	Power supply input voltage +		
25, 7	GND	Power supply input voltage -		
1	CHASSIS	Cable shield connected to chassis		
18	I1A	External Trigger A (polarity insensitive)		
19	I1B	External Trigger B (polarity insensitive)		
6	I2A	Input 2 A (polarity insensitive)		
10	I2B	Input 2 B (polarity insensitive)		
8	O1+	Output 1 +		
22	O1-	Output 1 -		
11	O2+	Output 2 +		
12	O2-	Output 2 -		
20	RX	Auxiliary RS232 RX		
21	TX	Auxiliary RS232 TX		
23	ID+	ID-NET™ network +		
24	ID-	ID-NET™ network -		
14, 15, 16, 17	NC	Not Connected		
Pin	**Name**	**RS232**	**RS485 Full-Duplex**	**RS485 Half-Duplex**
2	MAIN INTERFACE (SW SELECTABLE) **Reference to GND**	TX	TX+	RTX+
3		RX	*RX+	
4		RTS	TX-	RTX-
5		CTS	*RX-	

* Do not leave floating, if not used connect to GND.

In order to meet EMC requirements:

- connect the reader chassis to the plant earth ground by means of a flat copper braid shorter than 100 mm;
- connect your cable shield to the locking ring nut of the connector.

ID-NET™ NETWORK TERMINATION

The network must be properly terminated by a 120 Ohm resistor at the first and last reader of the network.

INPUTS

There are two optocoupled polarity insensitive inputs available on the 25-pin D-sub connector of the reader: Input 1 (External Trigger) and Input 2, a generic input.

The electrical features of both inputs are:

V_{AB} Max.	I_{IN} Max.
30 V	12 mA

The relative pins on the 25-pin D-sub connector are:

Pin	Name	Function
9	Vdc	Power Supply input voltage +
18	I1A	External Trigger A (polarity insensitive)
19	I1B	External Trigger B (polarity insensitive)
6	I2A	Input 2 A (polarity insensitive)
10	I2B	Input 2 B (polarity insensitive)
7	GND	Power Supply input voltage -

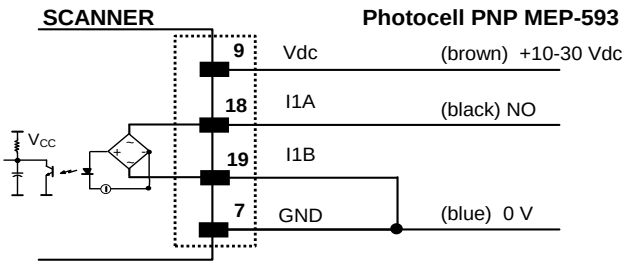

Figure 88 – MEP-593 PNP Photocell Connections Using Scanner Power

OUTPUTS

Two general purpose optocoupled but polarity sensitive outputs are available on the 25-pin D-sub connector.

The pinout is the following:

Pin	Name	Function
8	O1+	Configurable digital output 1 +
22	O1-	Configurable digital output 1 -
11	O2+	Configurable digital output 2 +
12	O2-	Configurable digital output 2 -

The electrical features of the two outputs are the following:

V_{CE} max = 30 Vdc

40 mA continuous max.; 130 mA pulsed max.

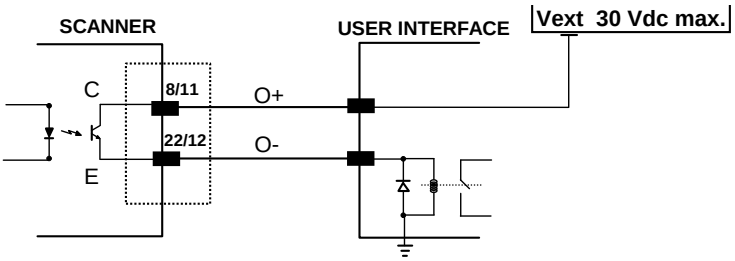

Figure 89 - Open Emitter Output Connections

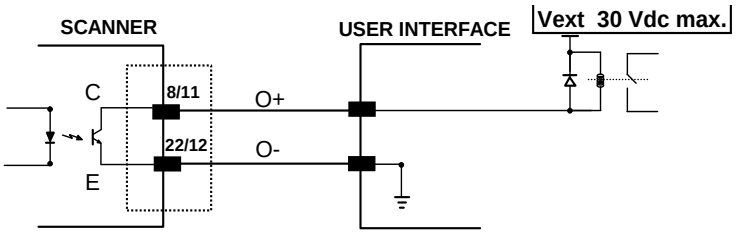

Figure 90 - Open Collector Output Connections

USER INTERFACE - SERIAL HOST

RS232 PC-side connections			
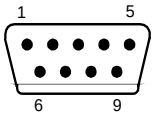 9-pin male connector		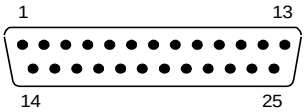 25-pin male connector	
Pin	**Name**	**Pin**	**Name**
2	RX	3	RX
3	TX	2	TX
5	GND	7	GND
7	RTS	4	RTS
8	CTS	5	CTS

How To Build A Simple Interface Test Cable:

The following wiring diagram shows a simple test cable including power, external (push-button) trigger and PC RS232 COM port connections.

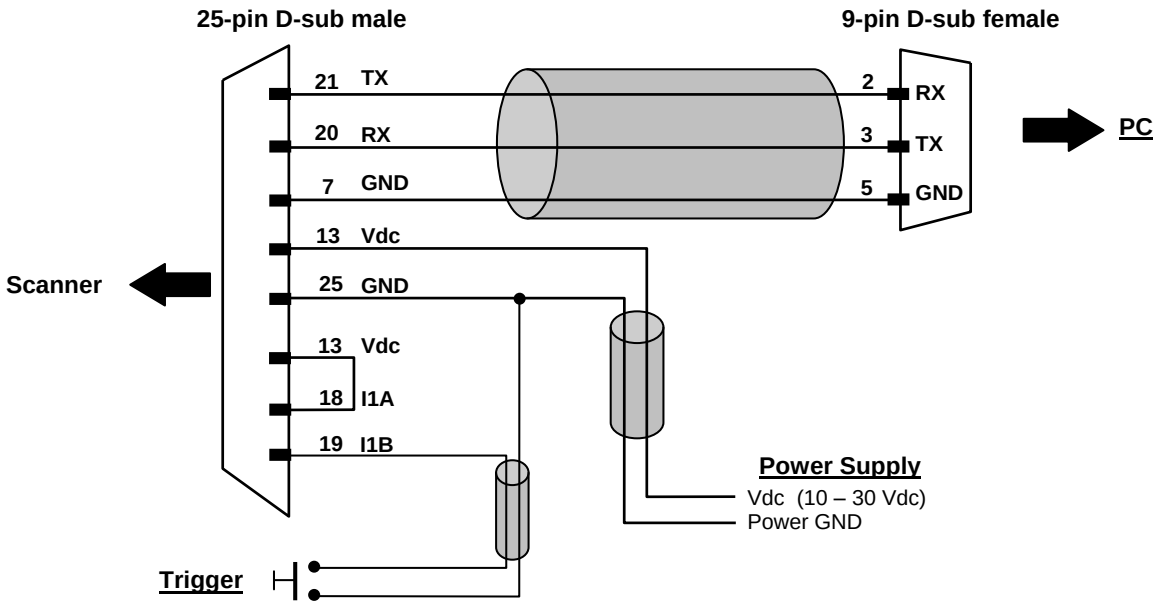

Figure 91- Test Cable for Serial Model Scanners

B ALTERNATIVE CONNECTIONS FOR ETHERNET MODELS

The connector pinouts and notes given in this appendix are for custom cabling applications.

POWER, COM AND I/O CONNECTOR

The scanner is equipped with an M12 17-pin male connector for connection to the power supply, serial interfaces and input/output signals. The details of the connector pins are indicated in the following table:

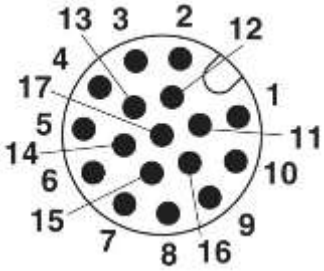

Figure 92 – M12 17-pin male COM, I/O and Power Connector

Power, COM and I/O Connector Pinout			
Pin	**Name**	**Function**	
1 2 Connector case	Vdc GND CHASSIS	Power supply input voltage + Power supply input voltage - Connector case provides electrical connection to the chassis	
6 5 13 3	I1A I1B I2A I2B	External Trigger A (polarity insensitive) External Trigger B (polarity insensitive) Input 2 A (polarity insensitive) Input 2 B (polarity insensitive)	
9 8 16	O1 O2 NC	Output 1 Output 2 Not connected	(NPN or PNP short circuit protected and software programmable)
14 4	RX TX	Auxiliary RS232 RX Auxiliary RS232 TX	
7 15	ID+ ID-	ID-NET™ network + ID-NET™ network -	
Pin	**Name**	**RS232**	**RS485/422 Full-Duplex**
17 11 12 10	MAIN INTERFACE (SW SELECTABLE) **Reference to GND**	TX RX RTS CTS	TX+ *RX+ TX- *RX-

* Do not leave floating, if not used connect to GND.

In order to meet EMC requirements:

- connect the reader chassis to the plant earth ground by means of a flat copper braid shorter than 100 mm;
- connect your cable shield to the locking ring nut of the connector.

ON-BOARD ETHERNET CONNECTOR

A Standard M12 D-Coded female connector is provided for the on-board Ethernet connection. This interface is IEEE 802.3 10 BaseT and IEEE 802.3u 100 BaseTx compliant. Use Cat 5e or superior cables.

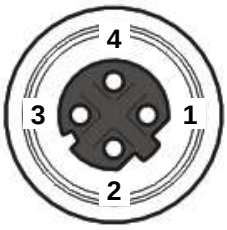

Figure 93 - M12 D-Coded Female Ethernet Network Connector

On-Board Ethernet Network Connector Pinout		
Pin	**Name**	**Function**
1	TX +	Transmitted data (+)
2	RX +	Received data (+)
3	TX -	Transmitted data (-)
4	RX -	Received data (-)

ID-NET™ NETWORK TERMINATION

The network must be properly terminated by a 120 Ohm resistor at the first and last reader of the network.

INPUTS

There are two optocoupled polarity insensitive inputs available on the M12 17-pin connector of the reader: Input 1 (External Trigger) and Input 2, a generic input.

The electrical features of both inputs are:

V_{AB} Max.	I_{IN} Max.
30 V	12 mA

The relative pins on the M12 17-pin connector are:

Pin	Name	Function
1	Vdc	Power Supply input voltage +
6	I1A	External Trigger A (polarity insensitive)
5	I1B	External Trigger B (polarity insensitive)
13	I2A	Input 2 A (polarity insensitive)
3	I2B	Input 2 B (polarity insensitive)
2	GND	Power Supply input voltage -

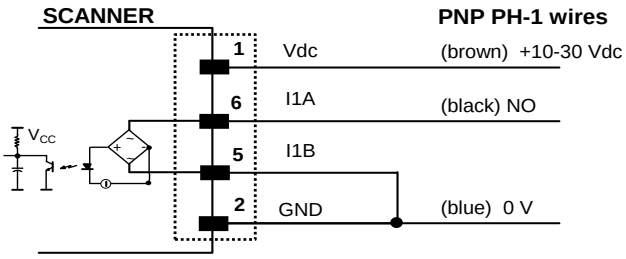

Figure 94 - PH-1 Photocell (PNP) External Trigger Using Scanner Power

OUTPUTS

Two general purpose **non opto-isolated** but short circuit protected outputs are available on the M12 17-pin connector.

The pinout is the following:

Pin	Name	Function
9	O1	Configurable digital output 1
8	O2	Configurable digital output 2
2	GND	Output reference signal

The electrical features of the two outputs are the following:

Reverse-Polarity and Short-Circuit Protected

V_{OUT} (I_{LOAD} = 0 mA) max = 30 Vdc

V_{OUT} (I_{LOAD} = 100 mA) max = 3 Vdc

I_{LOAD} max = 100 mA

The output signals are fully programmable being determined by the configured Activation/Deactivation events, Deactivation Timeout or a combination of the two. Refer to the Digital I/O Setting folder in the Genius™ Help On Line for further details.

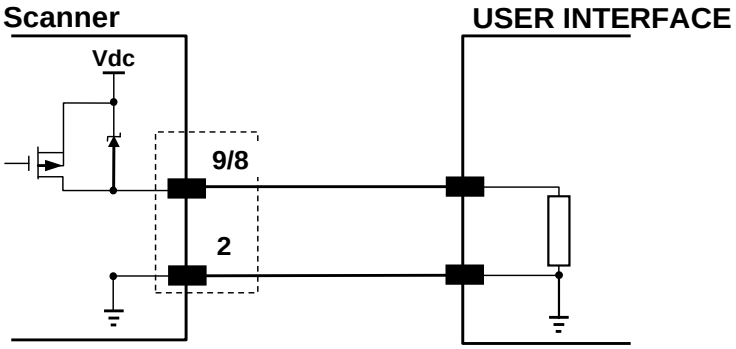

Figure 95 - PNP Output Connection

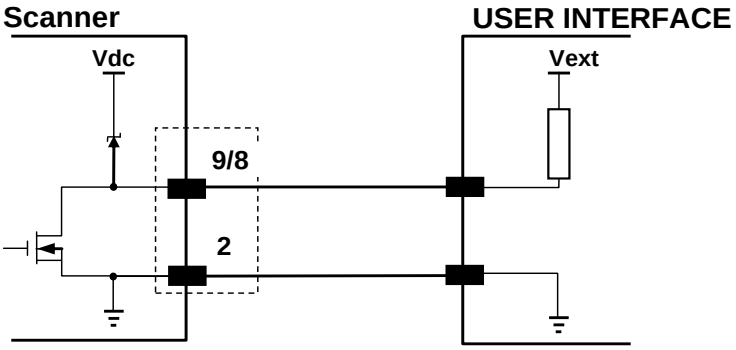

Figure 96 - NPN Output Connection

CAUTION: For NPN output connections, the external interface voltage (Vext) must not exceed the scanner power supply source voltage (Vdc) otherwise correct output functioning cannot be guaranteed.

C CONNECTIONS FOR PROFINET-IO MODELS

ON-BOARD PROFINET-IO CONNECTORS (2)

Two Standard M12 D-Coded female connectors are provided for the on-board Profinet-IO connection. This interface is IEEE 802.3u 100 BaseTx compliant.

Use accessory ETH CABLE M12-M12 cables or Cat 5e or superior cables.

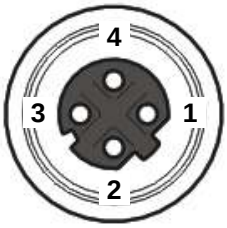

Figure 97 - M12 D-Coded 4-pin Female Profinet-IO Network Connector

On-Board Ethernet Network Connector Pinout		
Pin	**Name**	**Function**
1	TX +	Transmitted data (+)
2	RX +	Received data (+)
3	TX -	Transmitted data (-)
4	RX -	Received data (-)

POWER

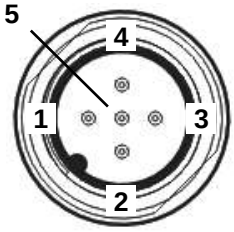

Figure 98 - M12 A-Coded 5-pin Male Power Connector

Power Connector Pinout		
Pin	**Name**	**Function**
1	Vdc	Power supply input voltage +
2	NC	Not Connected
3	GND	Power supply input voltage -
4	NC	Not Connected
5	NC	Not Connected

The CS-A1-02 or AS-I accessory power cables can be used to connect to the power source.

GLOSSARY

ACR-Lite (Advanced Code Reconstruction)
This is a light version of the powerful Advanced Code Reconstruction technology applied to high performance high precision scanners. ACR-Lite is effective in reading codes positioned close-to-linear, small height codes, damaged codes, or poor print quality codes. See par. 6.1.

Aperture
Term used on the required CDRH warning labels to describe the laser exit window.

Barcode
A pattern of variable-width bars and spaces which represents numeric or alphanumeric data in machine-readable form. The general format of a barcode symbol consists of a leading margin, start character, data or message character, check character (if any), stop character, and trailing margin. Within this framework, each recognizable symbology uses its own unique format.

Barcode Label
A label that carries a barcode and can be affixed to an article.

Baud Rate
A unit used to measure communications speed or data transfer rate.

CDRH (Center for Devices and Radiological Health)
This organization (a service of the Food and Drug Administration) is responsible for the safety regulations governing acceptable limitations on electronic radiation from laser devices. Datalogic devices are in compliance with the CDRH regulations.

Code Positioning
Variation in code placement that affects the ability of a scanner to read a code. The terms Pitch, Skew, and Tilt deal with the angular variations of code positioning in the X, Y and Z axes. See pars. 3.2.1 and 3.3.4. Variations in code placement affect the pulse width and therefore the decoding of the code. Pulse width is defined as a change from the leading edge of a bar or space to the trailing edge of a bar or space over time. Pulse width is also referred to as a transition. Tilt, pitch, and skew impact the pulse width of the code.

Decode
The process of translating a barcode into data characters using a specific set of rules for each symbology.

Decoder
As part of a barcode reading system, the electronic package which receives the signals from the scanner, performs the algorithm to interpret the signals into meaningful data and provides the interface to other devices. The decoder is normally integrated into the scanner.

EAN
European Article Number System. The international standard barcode for retail food packages.

FLASH
An on-board non-volatile memory chip.

Full Duplex
Simultaneous, two-way, independent transmission in both directions.

Half Duplex
Transmission in either direction, but not simultaneously.

Host
A computer that serves other terminals in a network, providing services such as network control, database access, special programs, supervisory programs, or programming languages.

Interface
A shared boundary defined by common physical interconnection characteristics, signal characteristics and meanings of interchanged signals.

LED (Light Emitting Diode)
A low power electronic device that can serve as a visible or near infrared light source when voltage is applied continuously or in pulses. It is commonly used as an indicator light and uses less power than an incandescent light bulb but more than a Liquid Crystal Display (LCD). LEDs have extremely long lifetimes when properly operated.

Multidrop Line
A single communications circuit that interconnects many stations, each of which contains terminal devices. See RS485.

Parameter
A value that you specify to a program. Typically parameters are set to configure a device to have particular operating characteristics.

Picket-Fence Orientation
When the barcode's bars are positioned vertically on the product, causing them to appear as a picket fence. The first bar will enter the scan window first. See par. 6.2.2.

Pitch
Rotation of a code pattern about the X-axis. The normal distance between center line or adjacent characters. See pars. 3.2.1 and 3.3.4.

Position
The position of a scanner or light source in relation to the target of a receiving element.

Protocol
A formal set of conventions governing the formatting and relative timing of message exchange between two communicating systems.

Raster
The process of projecting the laser beam at varied angles spaced evenly from each other. Typically, the mirrored rotor surfaces are angled to create multiple scan lines instead of a single beam.

Resolution
The narrowest element dimension, which can be distinguished by a particular reading device or printed with a particular device or method.

RS232
Interface between data terminal equipment and data communication equipment employing serial binary data interchange.

RS485
Interface that specifies the electrical characteristics of generators and receivers for use in balanced digital multipoint systems such as on a Multidrop line.

Scanner
A device that examines a printed pattern (barcode) and either passes the uninterpreted data to a decoder or decodes the data and passes it onto the Host system.

Serial Port
An I/O port used to connect a scanner to your computer, identifiable by a 9-pin or 25-pin connector.

Signal
An impulse or fluctuating electrical quantity (i.e.: a voltage or current) the variations of which represent changes in information.

Skew
Rotation about the Y-axis. Rotational deviation from correct horizontal and vertical orientation; may apply to single character, line or entire encoded item. See pars. 3.2.1 and 3.3.4.

Step-Ladder Orientation
When the barcode's bars are positioned horizontally on the product, causing them to appear as a ladder. The ends of all bars will enter the scan window first. See par. 6.2.1.

Symbol
A combination of characters including start/stop and checksum characters, as required, that form a complete scannable barcode.

Tilt
Rotation around the Z axis. Used to describe the position of the barcode with respect to the laser scan line. See pars. 3.2.1 and 3.3.4.

Trigger Signal
A signal, typically provided by a photoelectric sensor or proximity switch, which informs the scanner of the presence of an object within its reading zone.

UPC
Acronym for Universal Product Code. The standard barcode type for retail food packaging in the United States.

Visible Laser Diode
A light source used in scanners to illuminate the barcode symbol. Generates visible red light at wavelengths between 630 and 680 nm.

INDEX

A

Accessories; 31
Advanced Code Reconstruction (ACR-Lite); 79
Alternative Connections for Ethernet Models; 107
Alternative Connections for Serial Models; 103
Automatic Scanner Replacement; 24
Auxiliary RS232 Interface; 59

B

Backup & Restore; 21

C

Cleaning; 96
Code Verifier; 63
Connections for Profinet-IO Models; 111
Connector
  COM, I/O and Power; 107
  On-board Ethernet; 108
  On-board Profinet-IO; 111
  Power, COM and I/O; 103

E

Electrical Installation; 48
Ethernet Networks; 68
External Memory Backup & Restore; 21

F

FCC Compliance; ix

G

General View; xii
GFC-200; 41
GFC-2020; 39
GFC-2100; 40
Glossary; 112

H

Handling; x

I

ID-NET™ Cables; 54
ID-NET™ Interface; 54
ID-NET™ Multidata Networks; 76
ID-NET™ Network Termination; 59; 104; 108
ID-NET™ Response Time; 55
ID-NET™ Synchronized Networks; 71
Inputs; 60; 104; 108
IP Address Alignment Using Genius™ Discovery; 26

L

Laser Safety; vii
LEDs; 15
Linear Code Reading; 83

M

Main Serial Interface; 49
Mechanical Installation; 33
Model Descriptions; 29
Mounting the Scanner; 38

O

Other Layouts; 78
Outputs; 63; 105; 109
Overall Dimensions; 34

P

Package Contents; 33
Pass-Through; 77
Patents; vi
Performance; 85
Picket-Fence Mode; 84
Point-to-Point; 66
Positioning; 47
Power Supply; ix; 49
Product Description; 14
Profinet-IO Networks; 69

R

Reading Diagrams; 87
Reading Features; 79
References; vi
Reset Scanner; 21
RS232 Interface; 50
RS485 Full Duplex; 51
RS485 Half Duplex; 52

S

Step-Ladder Mode; 83
Subzero Temperature Models; 25
Support Through The Website; vi

T

Technical Features; 100
Troubleshooting; 97
Typical Layouts; 66

X

X-PRESS™ Human Machine Interface; 18

DATALOGIC

www.datalogic.com