REFERENCE MANUAL

# > DS6300

DATALOGIC

Datalogic S.r.l.
Via S. Vitalino 13
40012 Calderara di Reno
Bologna - Italy

DS6300 Reference Manual

Ed.: 07/2017

© 2003 – 2017 Datalogic S.p.A. and/or its affiliates ◆ ALL RIGHTS RESERVED. ◆ Without limiting the rights under copyright, no part of this documentation may be reproduced, stored in or introduced into a retrieval system, or transmitted in any form or by any means, or for any purpose, without the express written permission of Datalogic S.p.A. and/or its affiliates.

Datalogic and the Datalogic logo are registered trademarks of Datalogic S.p.A. in many countries, including the U.S.A. and the E.U.

Genius, Step-a-Head, ACR, and ID-NET are trademarks of Datalogic S.p.A. and/or its affiliates. All other trademarks and brands are property of their respective owners.

Datalogic shall not be liable for technical or editorial errors or omissions contained herein, nor for incidental or consequential damages resulting from the use of this material.

07/07/17

# CONTENTS


**REFERENCES ..... vi**
Reference Documentation ..... vi
Support Through The Website ..... vi
Patents ..... vi

**COMPLIANCE ..... vii**
Electrical Safety ..... vii
Laser Safety ..... vii
Power Supply ..... viii
CE Compliance ..... ix
FCC Compliance ..... ix
EAC Compliance ..... ix
Bureau of Indian Standard (BIS) ..... ix

**GENERAL VIEW ..... x**

**GUIDE TO INSTALLATION ..... xiv**
Point-to-Point Installation ..... xiv
Master/Slave Lonworks Installation ..... xv

**1 INTRODUCTION ..... 1**
1.1 Product Description ..... 1
1.2 Applications ..... 2
1.3 Model Description ..... 3
1.4 Oscillating Mirror Models ..... 3
1.5 Indicators ..... 6
1.6 Keypad and Display ..... 6
1.6.1 Internal Net ..... 6
1.6.2 Test Mode ..... 7
1.7 Accessories ..... 7

**2 INSTALLATION ..... 9**
2.1 Package Contents ..... 9
2.2 Mechanical Mounting ..... 10
2.2.1 Mounting the Scanner ..... 10
2.2.2 Mounting the Scanner with Accessories ..... 13
2.2.3 Mounting the Scanner with GFX-60 ..... 15
2.3 Positioning the Scanner ..... 17
2.3.1 16° Skew Positioning ..... 18
2.3.2 45° Skew Positioning ..... 19

**3 CBX ELECTRICAL CONNECTIONS ..... 20**
3.1 Power Supply ..... 22
3.2 Main Serial Interface ..... 22
3.2.1 RS232 Interface ..... 23
3.2.2 RS485 Full-Duplex Interface ..... 24
3.2.3 RS485 Half-Duplex Interface ..... 25
3.3 Auxiliary RS232 Interface ..... 27
3.4 Inputs ..... 28
3.4.1 Code Verifier ..... 32
3.5 Outputs ..... 32
3.6 User Interface - Host ..... 35

**4 CUSTOM CABLE ELECTRICAL CONNECTIONS ..... 36**
4.1 Power Supply ..... 38
4.2 Main Serial Interface ..... 38
4.2.1 RS232 Interface ..... 39
4.2.2 RS485 Full-Duplex Interface ..... 40
4.2.3 RS485 Half-Duplex Interface ..... 41
4.3 Auxiliary Interface ..... 43
4.4 Inputs ..... 43
4.4.1 Code Verifier ..... 46
4.5 Outputs ..... 46
4.6 User Interface ..... 48

**5 LONWORKS CONNECTIONS ..... 49**
5.1 Network Termination ..... 50
5.2 Lonworks Interface ..... 50

**6 FIELDBUS CONNECTIONS ..... 53**
6.1 Ethernet Interface ..... 53
6.2 Ethernet Interface (older models) ..... 54
6.3 DeviceNet Interface ..... 56
6.4 Profibus Interface ..... 57

**7 TYPICAL LAYOUTS ..... 58**
7.1 Local Lonworks Network ..... 58
7.1.1 Small Synchronized Network ..... 59
7.1.2 Multidata Network ..... 61
7.1.3 Fieldbus Networks ..... 62

**8 SOFTWARE CONFIGURATION ..... 64**
8.1 Genius™ Installation ..... 64
8.2 Guide to Rapid Configuration ..... 64
8.2.1 Wizard for Quick Reader Setup ..... 64
8.2.2 Genius™ Network Setup Through Master ..... 67
8.2.3 Alternative Slave Address Assignment ..... 72
8.3 Advanced Genius™ Configuration ..... 72
8.3.1 Genius™ Shortcuts for Network Configuration ..... 73
8.4 Parameter Default Values ..... 75

**9 READING FEATURES ..... 79**
9.1 Focus Adjustment ..... 79
9.2 Advanced Code Reconstruction (ACR™ 4) ..... 81
9.2.1 Tilt Angle for Advanced Code Reconstruction ..... 81
9.3 Performance ..... 82
9.3.1 Reading Conditions ..... 82
9.4 Reading Diagrams ..... 84
9.4.1 DS6300 Standard Model ..... 84
9.4.2 DS6300 Oscillating Mirror Model ..... 88
9.4.3 DS6300 with GFX-60 ..... 92

**10 MAINTENANCE ..... 94**
10.1 Cleaning ..... 94
10.2 External Memory Backup & Restore ..... 94
10.3 Automatic Scanner Replacement (ASR) ..... 94
10.3.1 ASR Network Configuration ..... 95
10.3.2 Scanner Replacement Procedure ..... 95

**11 TROUBLESHOOTING ..... 96**

**12 TECHNICAL FEATURES ..... 99**

**A ALTERNATIVE LAYOUTS ..... 101**
Point-to-Point ..... 101
ID-NET™ Gateway ..... 103
Pass Through ..... 104
RS232 Master/Slave ..... 105
Multiplexer ..... 107

**GLOSSARY ..... 108**

**INDEX ..... 110**

# REFERENCES

## REFERENCE DOCUMENTATION

The documentation related to the DS6300 management is listed below:

- CBX100/CBX500 Installation Manuals
- PWR series power supply unit Installation Manuals
- Document about the Ethernet connectivity
- Document about the Profibus connectivity
- ID-NET™ Fixed Baudrate Application Note
- GFC-60 90° deflecting mirror
- GFC-600 90° deg. mirror close distance
- GFX-60 X-pattern mirror
- Help On-Line in PDF format

## SUPPORT THROUGH THE WEBSITE

Datalogic provides several services as well as technical support through its website. Log on to **www.datalogic.com** and click on the **SUPPORT** > **Unattended Scanning Systems** category link. From this page you can select your product model from the dropdown list which gives you access to:

- Downloads including Data Sheets, Manuals, Software & Utilities, and Drawings;
- Repair Program for On-Line Return Material Authorizations (RMAs) plus Repair Center contact information;
- Service Program containing details about Maintenance Agreements;
- Technical Support through email or phone.

## PATENTS

See www.patents.datalogic.com for patent list.

This product is covered by one or more of the following patents:

Utility patents: EP0789315B1, EP0959426B9, EP1217571B1, EP1300798B1, GB2345568B, JP4376353B2, JP4451592B2, US5992740, US6056198, US6273336, US6394352, US6443360, US6742710, US7195162, US7654460

# COMPLIANCE

## ELECTRICAL SAFETY

This product conforms to the applicable requirements contained in the European Standard for electrical safety EN-60950 at the date of manufacture.

**WARNING**

***This symbol refers to operations that must be performed by qualified personnel only.*** *Example: opening the device.*

## LASER SAFETY

The following information is provided to comply with the rules imposed by international authorities and refers to the correct use of the DS6300 scanner.

### Standard Regulations

This scanner utilizes a low-power laser diode. Although staring directly at the laser beam momentarily causes no known biological damage, avoid staring at the beam as one would with any very strong light source, such as the sun.

Avoid that the laser beam hits the eye of an observer, even through reflective surfaces such as mirrors, etc.

This product conforms to the applicable requirements of both EN60825-1 and CDRH 21 CFR1040 at the date of manufacture. The reader is classified as a Class 2 laser product according to EN60825-1 regulations and as a Class II laser product according to CDRH regulations.

There is a safety device, which allows the laser to be switched on only if the motor is rotating above the threshold for its correct scanning speed.

**WARNING**

*Use of controls or adjustments or performance of procedures other than those specified herein may result in exposure to hazardous visible laser light*.

The laser light is visible to the human eye and is emitted from the window on the head of the scanner (Figure A).

Warning labels indicating exposure to laser light and the device classification are applied onto the head of the scanner (Figure A):

**Laser Safety Label for Oscillating Mirror and Standard Models**

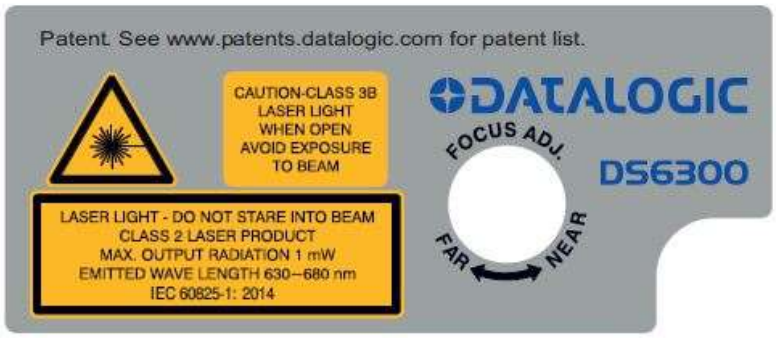


**Warning and Device Class Label**

The identification label is applied onto the bottom part of the scanner (Figure A, 2):

**Device Identification Label**

Disconnect the power supply when opening the device during maintenance or installation to avoid exposure to hazardous laser light.

The laser diodes used in this device are classified as Class 3B laser products according to EN 60825-1 regulations and as Class IIIb laser products according to CDRH regulations. Any violation of the optic parts in particular can cause radiation up to the maximum level of the laser diode (35 mW at 630~680 nm).

## POWER SUPPLY

**This product is intended to be installed by Qualified Personnel only.**

For all DS6300 models:

This device is intended to be supplied by a UL Listed Power Unit marked “Class 2” or LPS power source, which supplies power directly to the scanner via the 25/26-pin connector.

This scanner must be supplied by a Class II Power Supply Unit conforming to the EN 60950 safety regulation.

## CE COMPLIANCE

CE marking states the compliance of the product with essential requirements listed in the applicable European directive. Since the directives and applicable standards are subject to continuous updates, and since Datalogic promptly adopts these updates, therefore the EU declaration of conformity is a living document. The EU declaration of conformity is available for competent authorities and customers through Datalogic commercial reference contacts. Since April 20th, 2016 the main European directives applicable to Datalogic products require inclusion of an adequate analysis and assessment of the risk(s). This evaluation was carried out in relation to the applicable points of the standards listed in the Declaration of Conformity. Datalogic products are mainly designed for integration purposes into more complex systems. For this reason it is under the responsibility of the system integrator to do a new risk assessment regarding the final installation.

**Warning:** This is a Class A product. In a domestic environment this product may cause radio interference in which case the user may be required to take adequate measures.

## FCC COMPLIANCE

Modifications or changes to this equipment without the expressed written approval of Datalogic could void the authority to use the equipment.

This device complies with PART 15 of the FCC Rules. Operation is subject to the following two conditions: (1) This device may not cause harmful interference, and (2) this device must accept any interference received, including interference which may cause undesired operation.

This equipment has been tested and found to comply with the limits for a Class A digital device, pursuant to part 15 of the FCC Rules. These limits are designed to provide reasonable protection against harmful interference when the equipment is operated in a commercial environment. This equipment generates, uses, and can radiate radio frequency energy and, if not installed and used in accordance with the instruction manual, may cause harmful interference to radio communications. Operation of this equipment in a residential area is likely to cause harmful interference in which case the user will be required to correct the interference at his own expense.

## EAC COMPLIANCE

Customs Union:
The CU Conformity certification has been achieved; this allows the Product to bear the Eurasian mark of conformity.

## BUREAU OF INDIAN STANDARD (BIS)

Self Declaration – Conforming to IS 13252 (Part 1):2010, R-41009288.

# GENERAL VIEW

**DS6300**

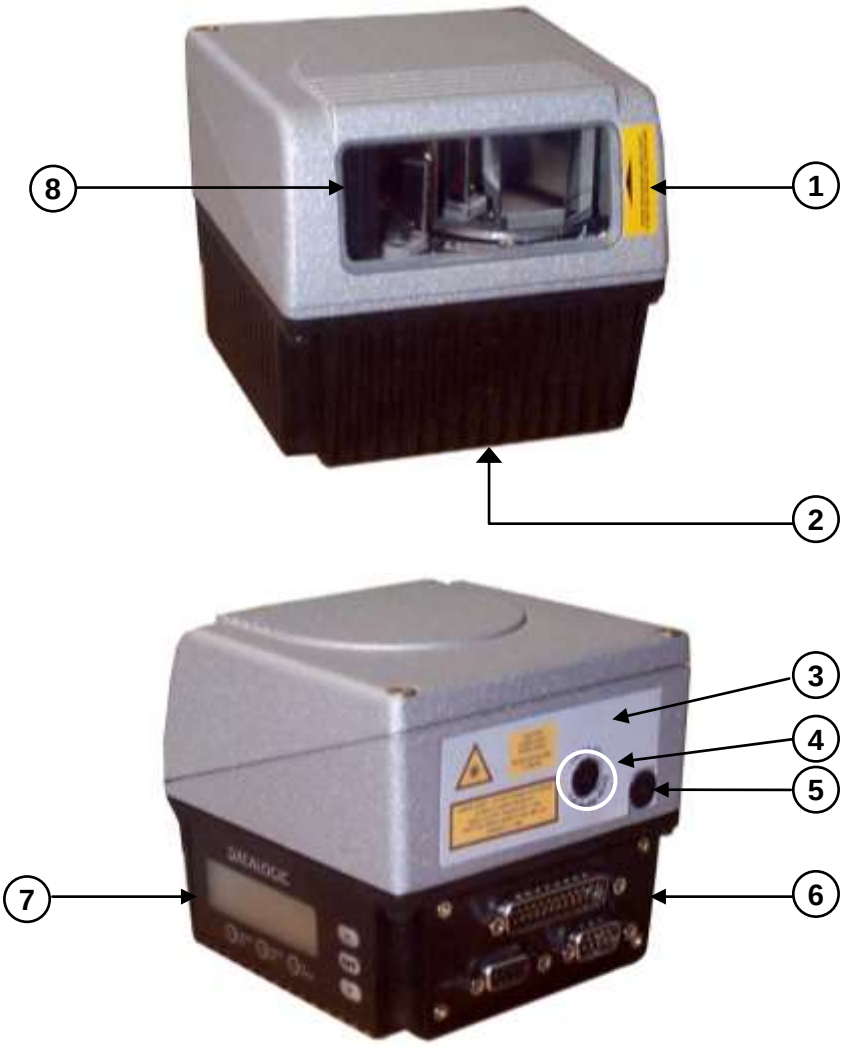


**Figure A - DS6300**

1. Laser Safety Label
2. Identification Label
3. Warning and Device Class Label
4. Focus Adjusting Screw
5. Service Cap
6. Connector Panel
7. Display and Keypad Panel
8. Laser Beam Output Window

## DS6300

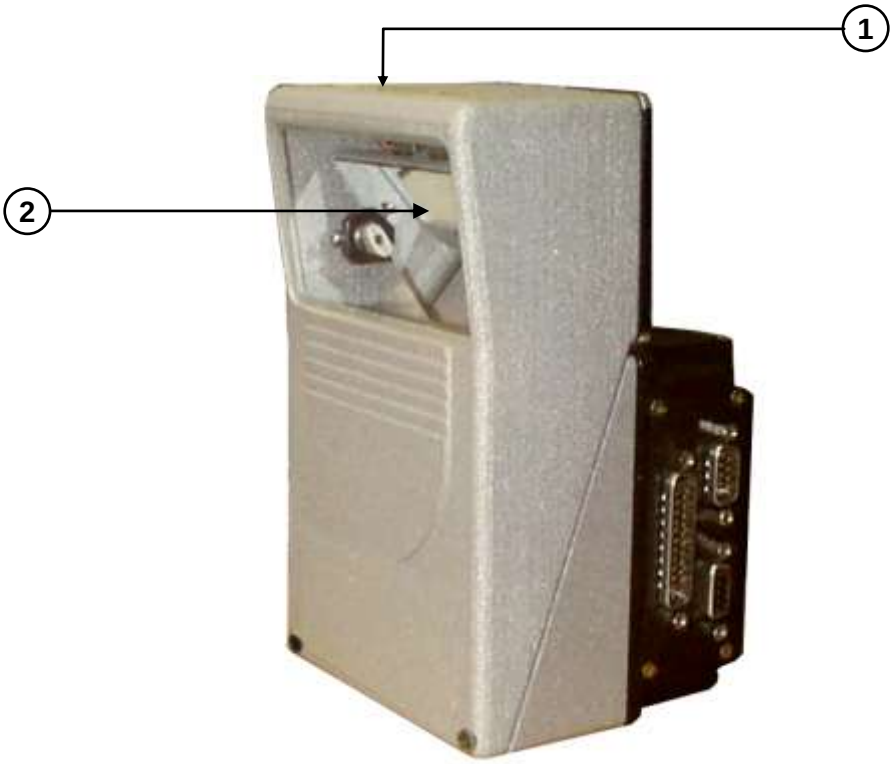


**Figure B - DS6300 Oscillating Mirror Version**

1. Laser Safety Label
2. Laser Beam Output Window

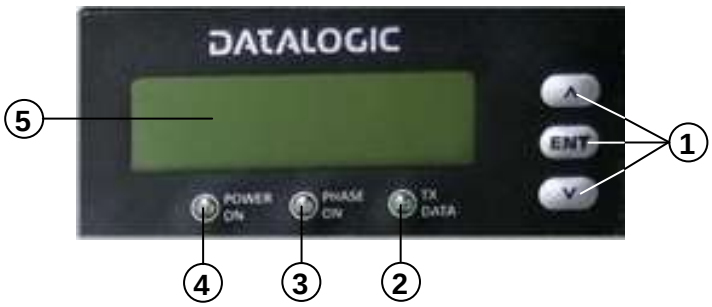


**Figure C – Display and Keypad Panel**

1. Programming Keypad
2. TX Data LED
3. Phase On LED
4. Power On LED
5. LCD Display

**Figure D – Connector Panel for Master/Slave Models**

1 Main/Aux. Interface 25-pin D-Sub male connector

2 Lonworks 9-pin male connector

3 Lonworks 9-pin female connector

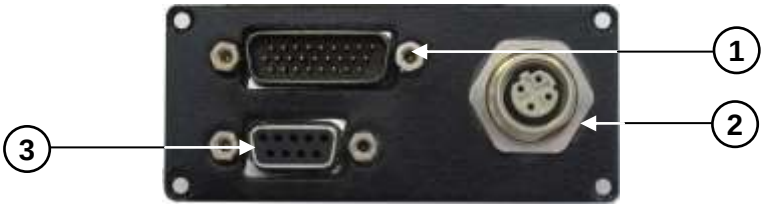


**Figure E – Connector Panel for Ethernet Models**

1 Main/Aux. Interface 26-pin D-Sub male connector

2 Ethernet 4-pin female connector

3 Lonworks 9-pin female connector

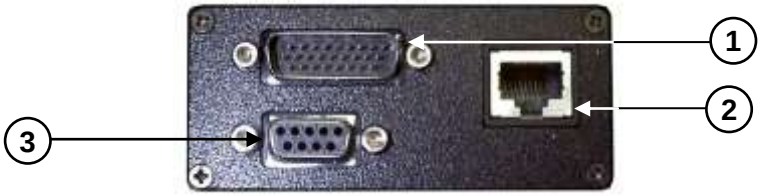


**Figure F – Connector Panel for (older) Ethernet Models**

1 Main/Aux. Interface 26-pin D-Sub male connector

2 RJ45 modular connector for Ethernet Interface

3 Lonworks 9-pin female connector

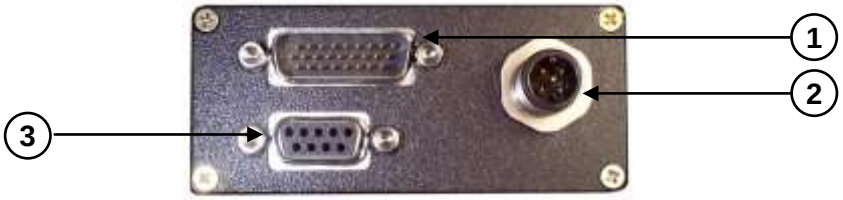


**Figure G – Connector Panel for DeviceNet Models**

1. Main/Aux. Interface 26-pin D-Sub male connector
2. DeviceNet 5-pin male connector
3. Lonworks 9-pin female connector

**Figure H – Connector Panel for Profibus Models**

1. Main/Aux. Interface 26-pin D-Sub male connector
2. Profibus 9-pin female connector (white)
3. Lonworks 9-pin female connector

# GUIDE TO INSTALLATION

## POINT-TO-POINT INSTALLATION

The following can be used as a checklist to verify all the necessary steps to complete installation of the DS6300 scanner.

1) Read all information in the section “Compliance” at the beginning of this manual.

2) Correctly mount the scanner using the bracket provided according to the information in par. 2.2 and position it at the correct reading distance according to your model as shown in par. 2.3 and par. 9.4.

3) Make electrical connections to your DS6300 scanner by:

   a) Connecting the DS6300 scanner to the CBX100/CBX500 by means of one of the CAB-Sxx (or CAB-F0x depending on the model) cables provided as an accessory (see par. 1.7).

   b) Providing correct and complete system cabling through the CBX100/CBX500 according to the signals necessary for the layout of your application (trigger, inputs, outputs).

      - Cabling: Power, Interface, Inputs, Outputs, etc. For further details, see chapter 3 (chapter 4 for custom cabling).
      - Alternative Layouts: Point-to-Point, Pass Through, RS232 Master/Slave, Multiplexer. See appendix A for layout references.

4) Configure the DS6300 scanner by installing and running the Genius™ configuration program from the CD-ROM provided. See chapter 8 and the Help On-Line for details. The main steps are:

   - Select the codes to be read
   - Set-up the communication parameters
   - Define data formatting parameters

| | |
|---|---|
| **NOTE** | *Fine tuning of the scanner position for barcode reading can be accomplished by performing a test through the SPY configuration tool in Genius™.* |

5) Exit the configuration program and run your application.

The installation is now complete.

## MASTER/SLAVE LONWORKS INSTALLATION

The following can be used as a checklist to verify all the steps necessary to complete installation of the DS6300 scanner in a Master/Slave Lonworks network.

1) Read all information in the section “Compliance” at the beginning of this manual.

2) Correctly mount the scanner using the bracket provided according to the information in par. 2.2 and position it at the correct reading distance according to your model as shown in par. 9.4.

3) Make electrical connections to your DS6300 scanner by:
   a) Connecting the DS6300 Master scanner to the CBX100/CBX500 by means of one of the CAB-Sxx (or CAB-F0x depending on the model) cables provided as an accessory (see par. 1.7).
   b) Correctly terminating the DS6300 Master reader according to the information given in par. 5.1 and par. 7.1.
   c) Completing the system wiring adding as many slave scanners as required by your system layout (refer to par. 7.1).
   d) Correctly terminating the last DS6300 Slave reader of the network according to the information given in par. 5.1 and par. 7.1.

4) Install and run the Genius™ configuration program from the CD-ROM provided. Configure the Local Lonworks Network using one of the procedures given below:
   - Configure the entire network through the Master as described in par. 8.2.2;
   - Configure the Master as described in par. 8.2.2 and locally define each slave scanner address as described in par. 8.2.3.
   - Define each scanner, master and slaves (with their addresses), by using the scanner keypad according to the information given in par. 1.6.1.

5) Configure the Master scanner through the Genius™ program. The main steps are:
   - Select the codes to be read
   - Set-up the communication parameters
   - Define data formatting parameters

6) Configure each Slave scanner through the Master scanner using Genius™. The main steps are:
   - Select the codes to be read

| | |
|---|---|
| **NOTE** | *Fine tuning of the scanner position for barcode reading can be accomplished by performing a test through the SPY configuration tool in Genius™.* |

7) Send the configuration to the Master.

8) Perform the External Memory Backup Procedure for system backup purposes (see par. 10.2). For backward compatibility you can perform the ASR Network Configuration procedure for system backup purposes (see par. 10.3.1).

9) Exit the configuration program and run your application.

The installation is now complete.

# 1 INTRODUCTION

## 1.1 PRODUCT DESCRIPTION

The DS6300 is a high performance laser scanner in a complete range of industrial bar code readers offering an innovative and modular solution in terms of reading performance, connectivity and maintenance, in addition to a completely new hardware and software platform.

The DS6300 has been specifically designed for simple installation, easy use and flexibility. An innovative mechanical design together with the Datalogic patented Step-a-Head™ feature make it possible to rotate the reader head and the decoder base independently from each other. Step-a-Head™ enables the DS6300 to always be installed in the ideal position, by modifying the orientation of the connector panel while leaving the laser window in the desired position. The need for space is minimized and installation is easier.

The DS6300 has an innovative multi-step optic assembly for mechanically adjustable focusing, providing the scanner with a particularly large reading range of 250 mm to 2,000 mm (10-80 inches). Its key features are excellent reading field at the minimum distance and outstanding reading performance on low contrast bar codes. These features are a great benefit in applications such as reading barcodes directly printed on cardboard boxes.

The DS6300 can read all most popular barcodes even in the most difficult conditions, thanks to a new generation decoder and code reconstruction technology (ACR™ 4).

This reader is also offered in a model with an integrated SW programmable oscillating mirror.

Great attention has been given to built-in connectivity for market standards. A Local Lonworks network for scanner connectivity (all versions), and a Fieldbus network (Ethernet, DeviceNet, or Profibus) for host connectivity (dedicated versions) have been integrated in the decoder base.

Some of the main features of DS6300 are listed below:

- scanning speed up to 1200 scans/sec;
- 2 serial communication interfaces
- reading all popular codes;
- supply voltage from 15 to 30 Vdc;
- electrical connection through connectors;
- high speed Lonworks connectivity for Master/Slave layout;
- Fieldbus models (Ethernet, Profibus) with built-in connectivity;
- programmable in several different operating modes to suit the most various barcode reading system requirements;
- light source: solid state laser diode; the light emitted has a wavelength between 630~680nm.
- IP64 protection class of the enclosure (IP50 for older RJ45 Ethernet models).

## 1.2 APPLICATIONS

The DS6300 barcode reader is specifically designed for industrial applications and for all cases requiring high reading performance such as:

- code reconstruction
- reading of codes covered by plastic film
- reading of codes with a wide depth of field
- reading of high resolution codes positioned at long distances from the reader
- code reading on fast moving objects

DS6300 is designed for both single-reader layouts and multi-reader layouts. For typical layouts see chapter 7 and appendix A.

| Feature | Benefit |
|---|---|
| **ACR™** | • Advanced Code Reconstruction technology allows the reading of low aspect ratio labels placed anywhere on a parcel and enhances the readability of poorly printed or damaged codes. |
| **Modular solution with separated head and base and Step-a-Head™ feature** | • Possibility to select the combination of head and base that best fits the needs of the application.<br>• Great scalability of the offer.<br>• Down time cost reduction, since the decoder base works even if the head has been removed.<br>• Easy maintenance. In case of replacement of the head, all the configuration parameters are stored in the base, and the scanner is automatically configured.<br>• Easy installation with the minimum room needed. |
| **Reading performance on low contrasted or thermal printed barcodes** | • Best results in typical manufacturing reading applications. |
| **Master working as a Multiplexer on high speed Lonworks bus** | • Great competitiveness of the offer, since the cost of an external multiplexer is saved;<br>• High data transfer on an industrial, reliable bus running at 1.25 Mbit/sec. |
| **Genius™ Configuration SW** | • Reduced learning time, with an easy wizard approach;<br>• Multilanguage platform;<br>• All the configuration parameters stored into the scanner;<br>• The entire scanner setup is managed via SW, with the possibility to “clone” a customized scanner by simply downloading a configuration file.<br>• Not dependent on the Physical interface. |

| Feature | Benefit |
|---|---|
| **Energy Saving** | • A software parameter group which allows management of the energy saving feature. In particular, it allows turning on/off the motor and laser of all network scanners according to the selected digital input, encoder, or communication channel.<br>• The time required to restart the system is less than 1 minute independently from the number of scanners connected.<br>• It is suggested to use this parameter for example when the conveyor is stopped for a lengthy period. |

## 1.3 MODEL DESCRIPTION

The DS6300 scanner is available in versions that differ in regard to the following characteristics:

- Optical Model (Head)
- Decoder Model (Base)

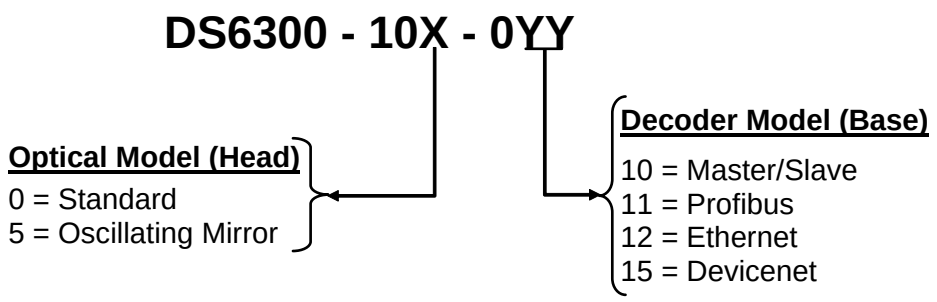


## 1.4 OSCILLATING MIRROR MODELS

Oscillating mirror models are used when coverage of a large reading area is required, mainly in picket fence applications.

The DS6300 scanner mounts a dedicated optic head with integrated oscillating mirror driven by a linear motor. The speed, the precision, the repeatability, and the reliability of this driving technology assure high level performance.

The oscillating mirror is completely software controlled and software programmable. The Genius™ software tool allows adjusting the linear motor speed (oscillating frequency) and the upper and lower limits of the oscillation by defining the top and bottom line limit angles.

When the oscillating mirror is programmed to read barcode labels at very small angles, position the reader to **assure at least 10°** for the Skew angle (see par. 2.2.3). This angle refers

to the most inclined or external laser line, so that all other laser lines assure more than 10° Skew. This avoids the direct reflection of the laser light emitted by the reader.

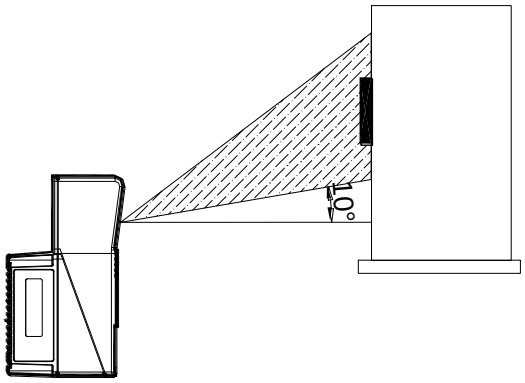


**Figure 1 – Oscillating Mirror Skew Angle**

Otherwise, the scanner can be mounted at an angle of inclination of 17.5° in order to attain symmetrical deflection ranges.

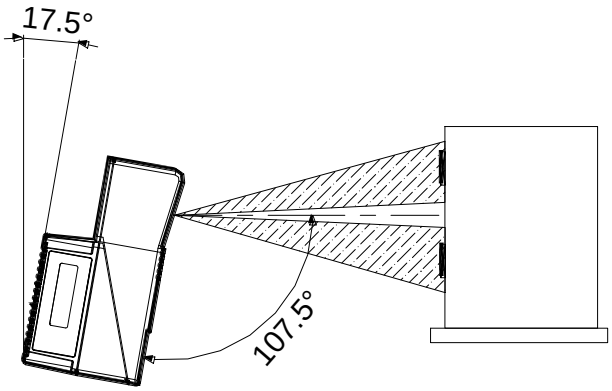


**Figure 2 - Oscillating Mirror Reading Position**

In the above case, the zone where the scan line is perpendicular to the reflecting surface corresponds to a neutral zone at the center of the reading field.

The mirror can be deflected up to 40°. Oscillation with respect to the output window median axis is asymmetrical ( see figure below).

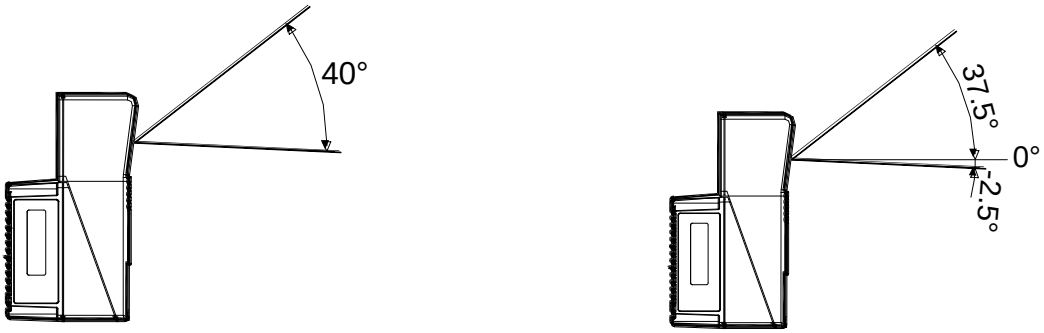


**Figure 3 - Oscillating Mirror Maximum Aperture and Asymmetry**

By configuring the oscillating speed up to the maximum value of 19 Hz, raster emulation can be performed for reading fast moving objects.

| Hz | Max. Aperture |
|---|---|
| 0-5 | 40° |
| 6-10 | 30° |
| 11-15 | 20° |
| 16-19 | 10° |

**NOTE**

*By limiting the raster width to the minimum necessary, the number of scans on the reading surface is increased.*

Oscillating angles are selected in software where the minimum and maximum angles correspond to –2.5° and +37.5°.

The scanner can be tilted in order for the 17.5° software setting to correspond with the 0° horizontal plane.

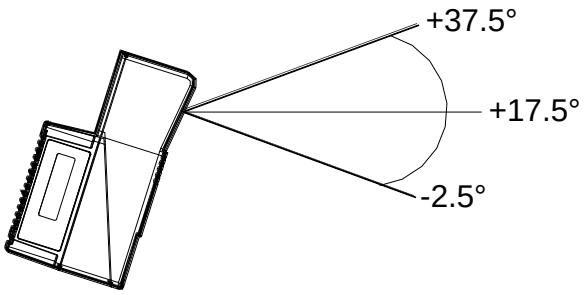


**Figure 4 - Oscillating Mirror Extreme Angle Positions**

These models provide higher scanning speed (1200 scans/sec) compared to standard models and the reading performance is not adversely affected by the oscillating mirror.

The following example represents the selection of an angle of +10° for the bottom line and an angle of +20° for the top line (see figure below).

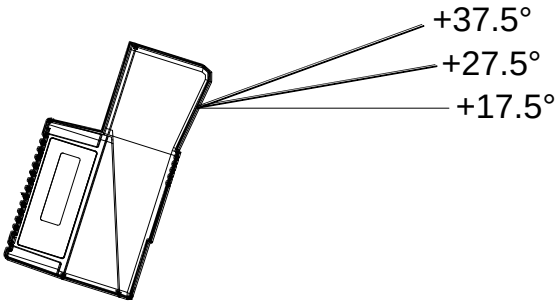


**Figure 5 - Oscillating Mode**

Refer to chapter 2 for more information on scanner mounting and positioning.

## 1.5 INDICATORS

The DS6300 has three LEDs on the Display and Keypad panel. The indicators have the following functions:

| | | |
|---|---|---|
| **POWER ON** | (red) | Indicates the scanner is turned on. |
| **PHASE ON** | (yellow) | Indicates the external presence sensor is active. |
| **TX DATA** | (green) | Indicates data transmission on the main serial interface. |

## 1.6 KEYPAD AND DISPLAY

The DS6300 keypad allows entering a menu for selection of one of the following functions:

- Welcome: shows the current software release and operating mode;
- Autolearn: starts the procedure making it possible to obtain an automatic, accurate and fast configuration of DS6300 without the necessity of directly checking/modifying the relevant parameters;
- Internal Net: defines scanner function within the local Lonworks network (see below);
- Ethernet Mode: allows setting the scanner IP address of the Master scanner to be used within the Host network;
- LCD Contrast: sets the LCD contrast;
- Bus: allows setting the scanner address (value range 0-125) to be used in a Profibus network;
- Test Mode: allows verifying the scanner reading position and features (see below).

The same settings may be performed by using the Genius™ program (see chapter 8 for details).

### 1.6.1 Internal Net

This submenu can be used as an alternative to configuration through Genius™, to assign the DS6300 scanner within a local Lonworks master/slave network.

It allows defining the scanner function (slave/master) within the Lonworks network and, if configured as Slave, its address.

To enter the Internal Net submenu and configure the scanner follow the given procedure:

1) Press and hold both the ▲ (up arrow) and ▼ (down arrow) keys for about 2 seconds to enter the Main menu;
2) Use the ▲ (up arrow) or ▼ (down arrow) key to select the “Internal Net” item, then press the ENT (enter) key to confirm;
3) Use the ▲ (up arrow) or ▼ (down arrow) key to select the “LonWAddrSel”” item, then press the ENT (enter) key to confirm;
4) Use the ▲ (up arrow) or ▼ (down arrow) key to select your scanner function among “Master”, “Slave n”, “Slave jolly”, “Disabled”; then, press the ENT (enter) key to confirm;

5) Use the ▲ (up arrow) or ▼ (down arrow) key to select the “Exit” item, then press the ENT (enter) key to confirm. Repeat this step again to exit the Main Menu and return to the scanner current operating mode.

### 1.6.2 Test Mode

Test Mode is particularly advised during the installation phase, since it causes the reader to be continuously activated allowing verification of its reading features and its reading position with respect to the barcode.

To enter the Test Mode submenu and configure the scanner follow the given procedure:

1) Press and hold both the ▲ (up arrow) and ▼ (down arrow) keys for about 2 seconds to enter the Main menu.
2) Use the ▲ (up arrow) or ▼ (down arrow) key to select the “Test Mode” item, then press the ENT (enter) key to confirm. The reader enters Test Mode.
3) Press the ▲ (up arrow) key to exit the Test Mode.
4) Use the ▲ (up arrow) and ▼ (down arrow) key to select the “Exit” item, then press the ENT (enter) key to confirm. The scanner exits the Main Menu and returns to its current operating mode.

## 1.7 ACCESSORIES

The following accessories are available on request for DS6300:

| Name | Description | Part Number |
|---|---|---|
| **Power Supplies** | | |
| PG6002 | Single unit power supply (US) | 93ACC1718 |
| PG6001 | Single unit power supply (UK) | 93ACC1719 |
| PG6000 | Single unit power supply (EU) | 93ACC1720 |
| PWR-120 | J-box power unit 110/230 VAC 24 V 120 W | 93ACC1530 |
| PWR-240 | J-box power unit 110/230 VAC 24 V 240 W | 93ACC1070 |
| PWR-480A | J-box power unit 110/230 VAC 24 V 480 W | 93ACC1850 |
| **Cables and Terminators** | | |
| BT-6000 | Bus terminator | 93A051299 |
| CAB-6101 | 9-pin scanner/scanner connection cable 1 m | 93A051220 |
| CAB-6102 | 9-pin scanner/scanner connection cable 2 m | 93A051230 |
| CAB-6105 | 9-pin scanner/scanner connection cable 5 m | 93A051240 |
| CAB-6112 | 9-pin scanner to scanner no power cable 2 m | 93A051224 |
| CAB-6115 | 9-pin scanner to scanner no power cable 5 m | 93A051225 |
| CAB-6305 | 25-pin power cable Fam 6k 5 m | 93ACC1768 |
| CAB-6310 | 25-pin power cable Fam 6k 10 m | 93ACC1752 |
| CAB-S01 | STD cable to CBX 1 m (25-pin to 25-pin) | 93A051351 |
| CAB-S02 | STD cable to CBX 2 m (25-pin to 25-pin) | 93A051352 |
| CAB-S05 | STD cable to CBX 5 m (25-pin to 25-pin) | 93A051353 |
| CAB-S10 | STD cable to CBX 10 m (25-pin to 25-pin) | 93A051354 |
| CAB-F01 | 6K-8K FBUS cable to CBX 1 m (26-pin to 25-pin) | 93A051355 |
| CAB-F02 | 6K-8K FBUS cable to CBX 2 m (26-pin to 25-pin) | 93A051356 |
| CAB-F05 | 6K-8K FBUS cable to CBX 5 m (26-pin to 25-pin) | 93A051357 |
| CAB-6502 | Fam 6K-8K cross cable 2.5 m (9-pin to 17-pin) | 93A051288 |
| CAB-6505 | Fam 6K-8K cross cable 5 m (9-pin to 17-pin) | 93A051289 |
| CAB-ETH-M01 | M12-IP67 Ethernet Cable (1 m) | 93A051346 |
| CAB-ETH-M03 | M12-IP67 Ethernet Cable (3 m) | 93A051347 |
| CAB-ETH-M05 | M12-IP67 Ethernet Cable (5 m) | 93A051348 |
| CBL-1534-0.2 | Ethernet Adapter Cable (M12 4-pin male to RJ45 female) | 93A050057 |

| Name | Description | Part Number |
|---|---|---|
| **Software Management** | | |
| Datalogic WebSentinel-005 | Supervisor (up to 5 arrays) | 93A101014 |
| Datalogic WebSentinel-010 | Supervisor (up to 10 arrays) | 93A101015 |
| Datalogic WebSentinel-020 | Supervisor (up to 20 arrays) | 93A101016 |
| Datalogic WebSentinel-032 | Supervisor (up to 32 arrays) | 93A101017 |
| Datalogic WebSentinel-064 | Supervisor (up to 64 arrays) | 93A101018 |
| Datalogic WebSentinel-128 | Supervisor (up to 128 arrays) | 93A101019 |
| Datalogic WebSentinel-256 | Supervisor (up to 256 arrays) | 93A101020 |
| **Mirrors** | | |
| GFC-60 | 90° mirror | 93A201100 |
| GFC-600 | 90° mirror close distance | 93A201102 |
| GFX-60 | X-pattern mirror | 93ACC1730 |
| *** Connection Boxes** | | |
| CBX100 | Compact Connection Box | 93A301067 |
| CBX500 | Modular Connection Box | 93A301068 |
| CBX800 | Gateway Connection Box | 93A301077 |
| BM100 | Backup Module | 93ACC1808 |
| BA100 | DIN Rail Adapters for CBX | 93ACC1821 |
| BA200 | Bosch Adapters for CBX | 93ACC1822 |
| BA900 | Two Cable Glands Panel | 93ACC1847 |
| **Sensors** | | |
| MEP-593 | Photocell kit – PNP (PH-1) | 93ACC1791 |
| MEP-543 | Photocell kit – NPN | 93ACC1728 |
| OEK-2 | Optical encoder kit (10 m cable + spring) | 93ACC1770 |
| OEK-1 | Optical encoder kit + 10 m cable | 93ACC1600 |
| **Brackets** | | |
| FBK-6000 | Fast bracket kit (2 pcs) | 93ACC1721 |
| US-60 | mounting bracket kit (5 pcs) for multisided stations | 890001020 |

* DS6300 application software does not support any of the CBX500 Host Interface Module accessories nor the BM150 Display accessory. Use the CBX800 Gateway for Host Interface Applications, (Fieldbus and non Fieldbus).

# 2 INSTALLATION

To install the system follow the given procedure:

1. Select the mounting location for DS6300;
2. Mount the DS6300 scanner;
3. Position the scanner with respect to the barcode;
4. Proceed with system electrical connection;
5. Install the Genius™ program on the PC and configure the scanner.
6. Adjust the focus position to the reading plane of the barcode.

| | |
|---|---|
| **WARNING** | *When installing several scanners, take care to position them correctly so that no laser beam enters the reading window perpendicularly and at the same level of the output beam of the other scanners. This condition could occur more frequently for side mounted applications. If these precautions are not followed, it may occur that the laser of the blinded scanner starts blinking due to an internal circuit which temporarily turns the laser off when detecting a power anomaly. To resolve this problem, it is sufficient to slightly change the inclination and position of one of the two scanners involved.* |

| | |
|---|---|
| **NOTE** | *Refer to the Reference Documentation for details on connecting your DS6300 reader to other devices in the system (i.e. CBX100 etc.).* |

## 2.1 PACKAGE CONTENTS

Verify that the DS6300 reader and all the parts supplied with the equipment are present and intact when opening the packaging; the list of parts includes:

- DS6300 reader
- Installation Quick Reference + barcode test chart
- DS6300 configuration CD-ROM
- Mounting bracket and screws

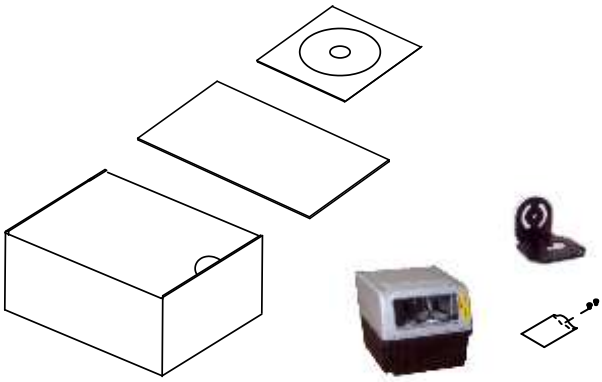

**Figure 6 - DS6300 Package Contents**

## 2.2 MECHANICAL MOUNTING

### 2.2.1 Mounting the Scanner

The DS6300 reader can be positioned and installed in the best way possible as a result of the patented Step-a-Head™ feature. Thanks to the separation between Head and Base, you can modify the orientation of the decoder base, and therefore display-keypad and connector panels, while keeping the optic head in the correct reading position. The reading head and the decoder base can be rotated independently from each other allowing the installation even in the most critical locations.

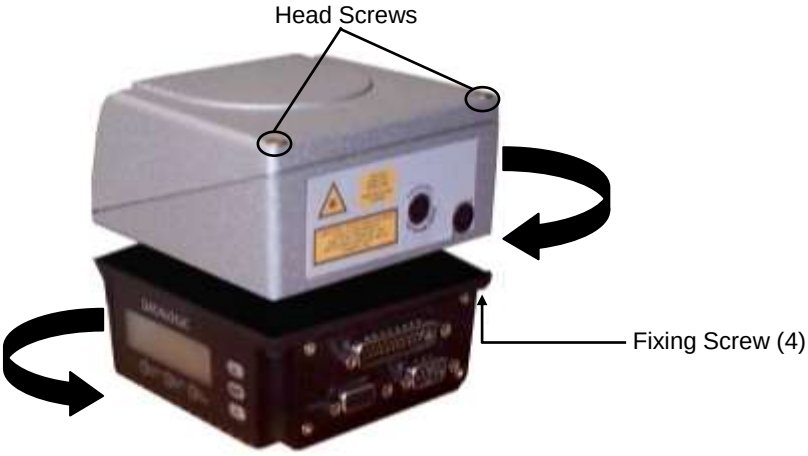


**Figure 7 - Step-A-Head™ Feature**

To rotate the head follow the given procedure:

1. detach the head from the base by unscrewing the four fixing screws;
2. rotate the head in the desired position;
3. loosen but don't remove the two screws on top of the head;
4. affix the head onto the base carefully aligning the four fixing screws and progressively tightening them about half-way;
5. completely tighten the two screws on top of the head;
6. completely tighten the four fixing screws.

The following diagrams give the overall dimensions of the reader standard model, oscillating mirror model and mounting brackets. They may be used for their installation.

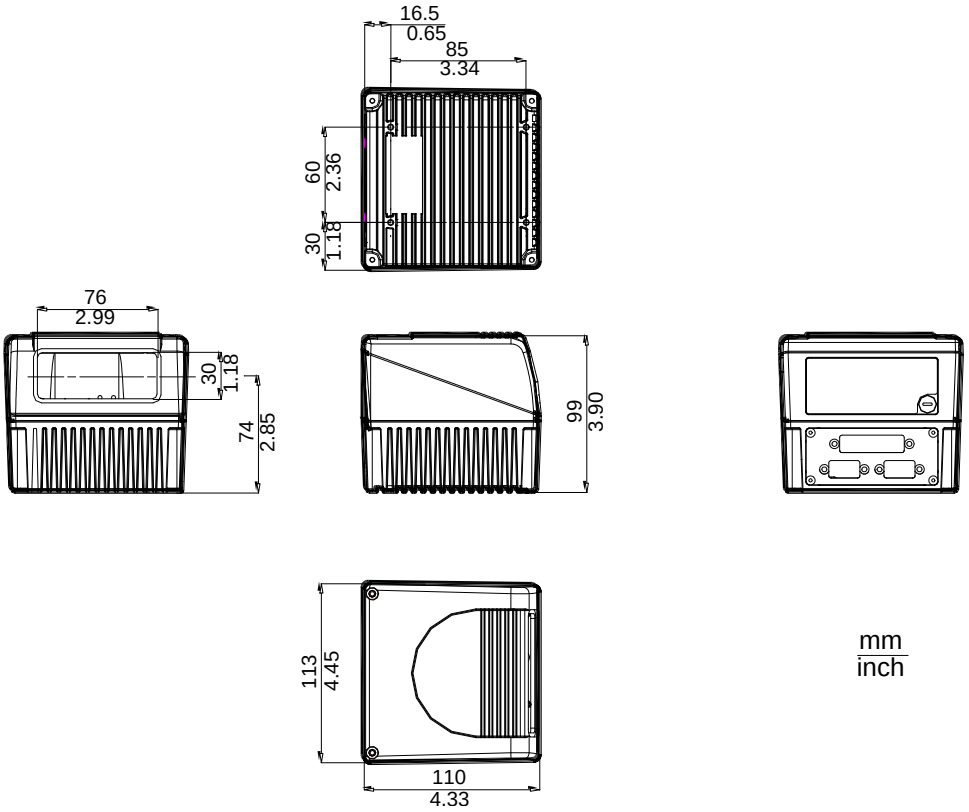


**Figure 8 - DS6300 Overall Dimensions**

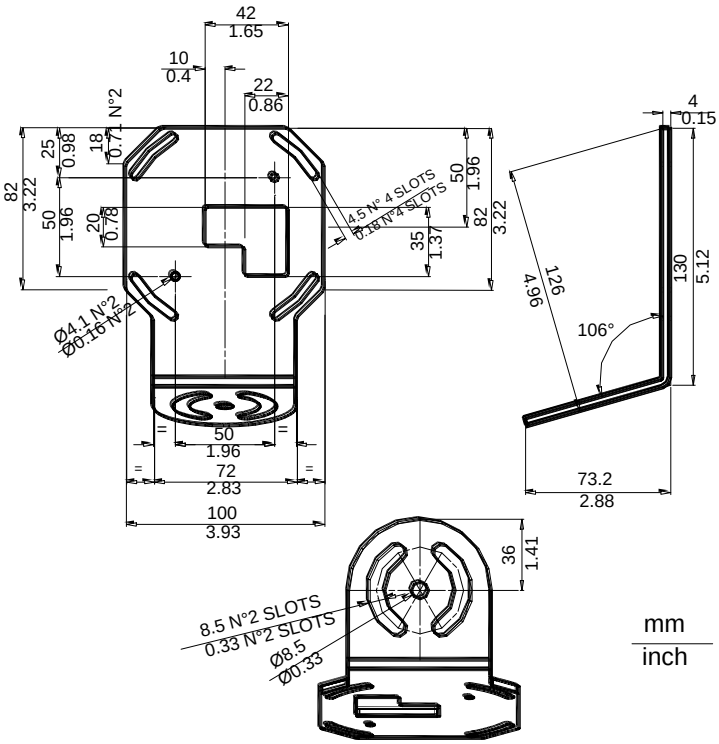


**Figure 9 – ST-237 Mounting Bracket Overall Dimensions**

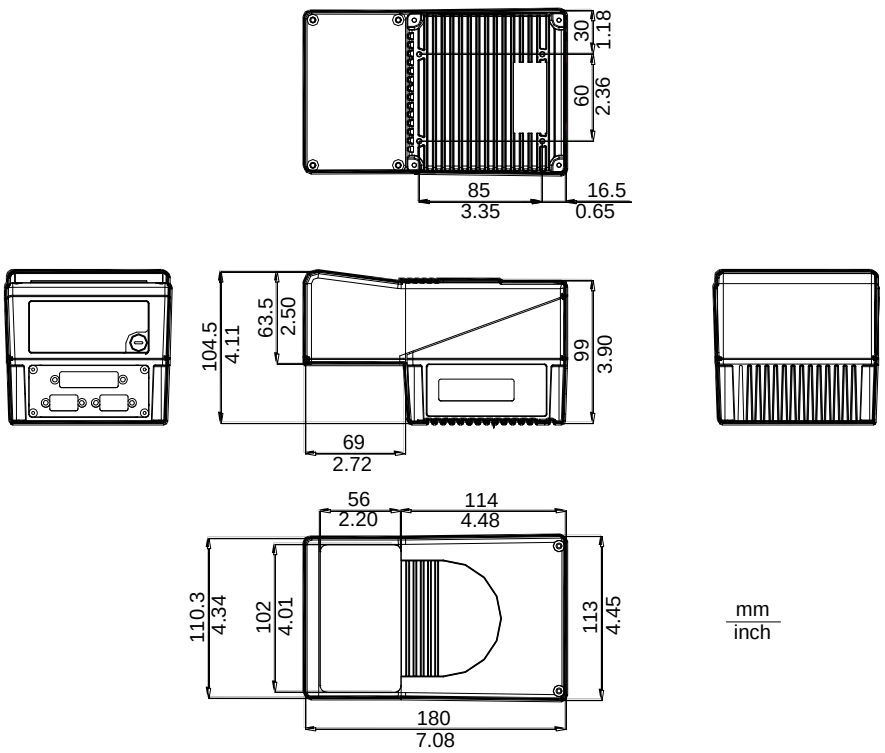


**Figure 10 - DS6300 Oscillating Mirror Model Overall Dimensions**

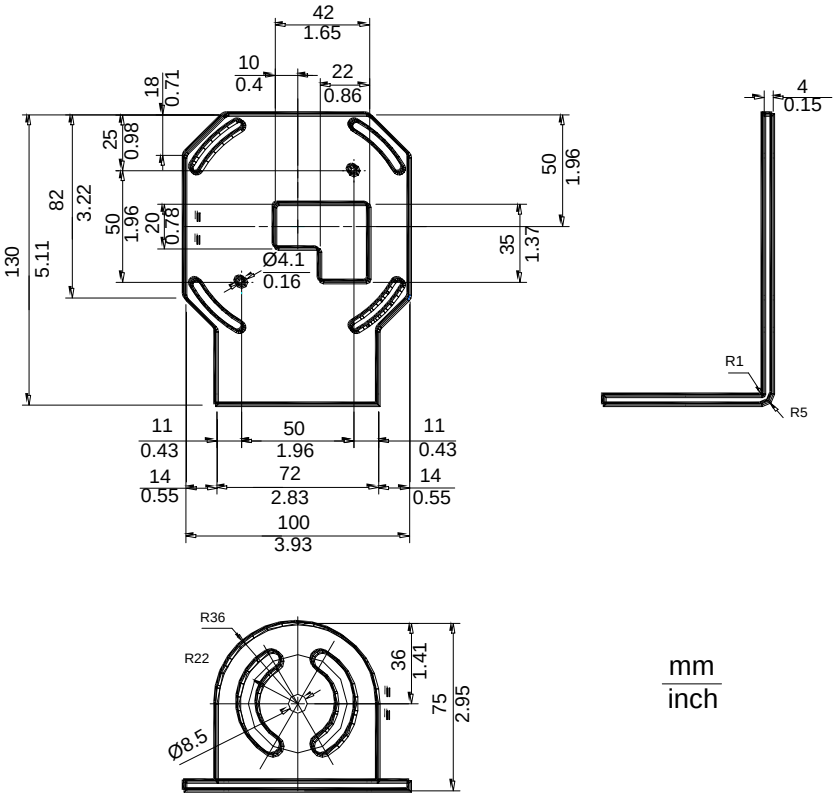


**Figure 11 – ST-210 Mounting Bracket Overall Dimensions**

### 2.2.2 Mounting the Scanner with Accessories

The following accessories allow installing the DS6300 reader in the most suitable position for your network layout:

- ST-237 mounting bracket;
- ST-210 mounting bracket;
- FBK-6000 fast bracket.

The ST-237 is a 106° mounting bracket to be mounted on the reader as displayed in the image below:

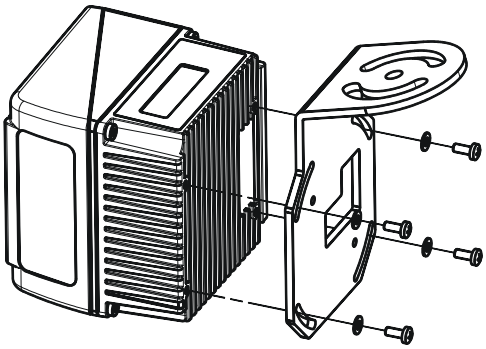

**Figure 12 – Mounting the ST-237 Mounting Bracket**

The ST-210 is a 90° mounting bracket to be mounted on the reader as displayed in the image below:

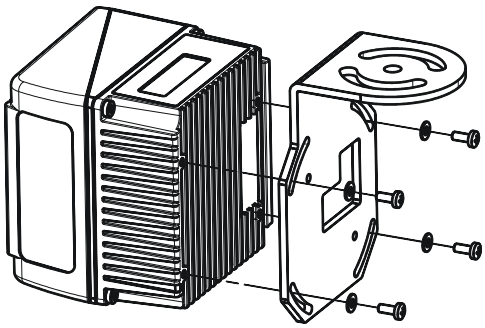

**Figure 13 – Mounting the ST-210 Mounting Bracket**

The FBK-6000 is a fast bracket kit allowing a quick and easy mounting of the scanner on the ST-237 bracket.

First, it is necessary to fix the FBK-6000 to the DS6300 scanner by means of the mounting screws:

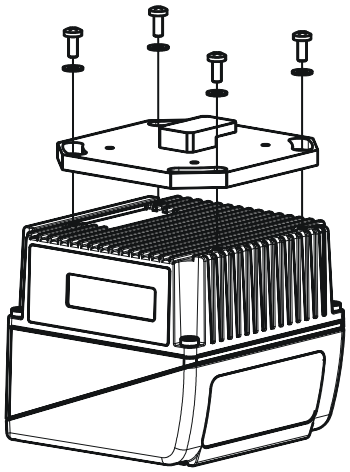

**Figure 14 – Mounting the FBK-6000 on the Scanner**

Then, attach the assembly to the mounting bracket by slipping the hook into the bracket hole. Finally, fix it by means of the 2 fixing screws:

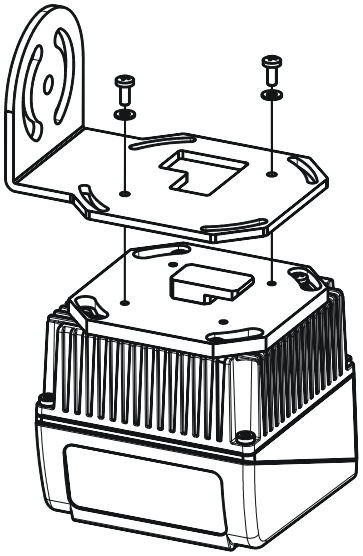

**Figure 15 – Mounting the Assembly on the Bracket**

### 2.2.3 Mounting the Scanner with GFX-60

The GFX-60 is an accessory X-pattern mirror for the DS6300 Series Scanners. The following procedure describes how to mount the GFX-60.

1. Unscrew the upper cover of the scan head, which houses the scanner output window.

   a) Remove the two top head screws.

   b) Loosen all four fixing screws.

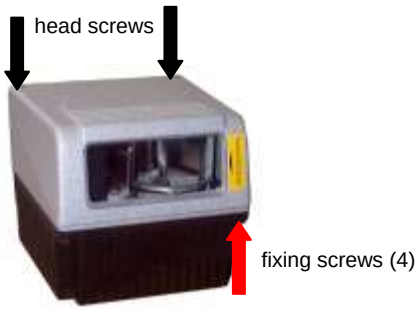


   c) Carefully remove the scanner output window from the scan head.

2. Mount the GFX-60 onto the scan head paying attention to correctly align the sealing gasket.

3. Start the four fixing screws and the two head screws partially to assure correct alignment to the scan head.

4. Completely tighten the two head screws.

5. Completely tighten the four fixing screws.

6. Mount the scanner at an angle of 16°, as indicated in figure below, in order to obtain an angle of 90° between the two scan lines. This guarantees an omni directional reading of the barcode, if the code label satisfies the ACR™ 4 conditions (see par. 9.3.1).

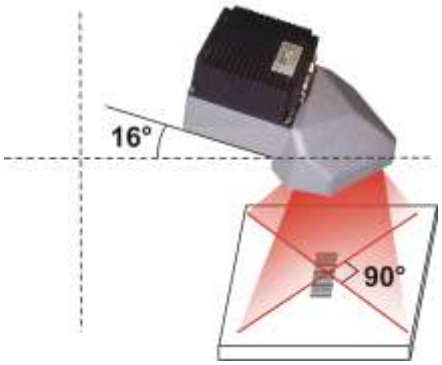


**Figure 16 – Omni-Directional Reading Position**

The DS6300 with the GFX-60 can be mounted over a conveyor in different positions.

The following picture illustrates the suggested position offering the best compromise between width and height of the reading area:

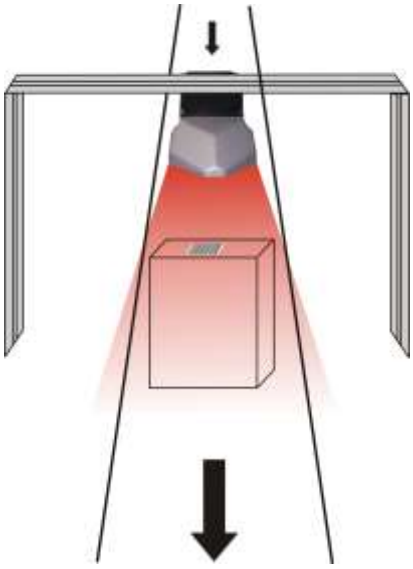

**Figure 17 – Central Reading Position**

The Central Reading position allows maximizing the reading distance (height) when the width of the reading area is not critical (narrow conveyors). In this case a complete reading on the central part of the conveyor plane is guaranteed.

| | |
|---|---|
| **NOTE** | *To better exploit the scanner and to optimize its reading performance when the GFX-60 is mounted, it is recommended to set the focus adjustment to obtain the desired reading area coverage.* |

For details about the reading performance of the DS6300 with GFX-60 see par. 9.4.3.

## 2.3 POSITIONING THE SCANNER

The DS6300 reader is able to decode moving barcode labels at a variety of angles, however significant angular distortion may degrade reading performance.

When mounting DS6300 take into consideration these three ideal label position angles: **Pitch 0°**, **Skew 10° to 30°** and **Tilt 0°**.

Follow the suggestions for the best orientation:

The **Pitch** angle is represented by the value **P** in Figure 18. Position the reader in order to minimize the Pitch angle.

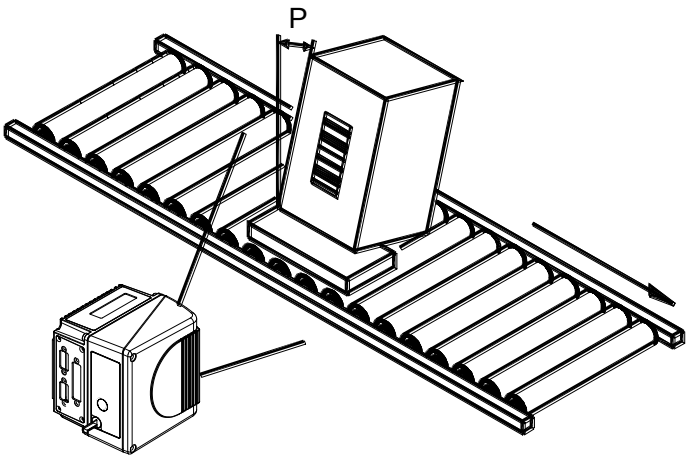


**Figure 18 - "Pitch" Angle**

The **Skew** angle is represented by the value **S** in Figure 19. Position the reader to **assure at least 10°** for the **Skew** angle. This avoids the direct reflection of the laser light emitted by the scanner.
For oscillating mirror models, this angle refers to the most inclined or external laser line, so that all other laser lines assure more than 10° Skew.

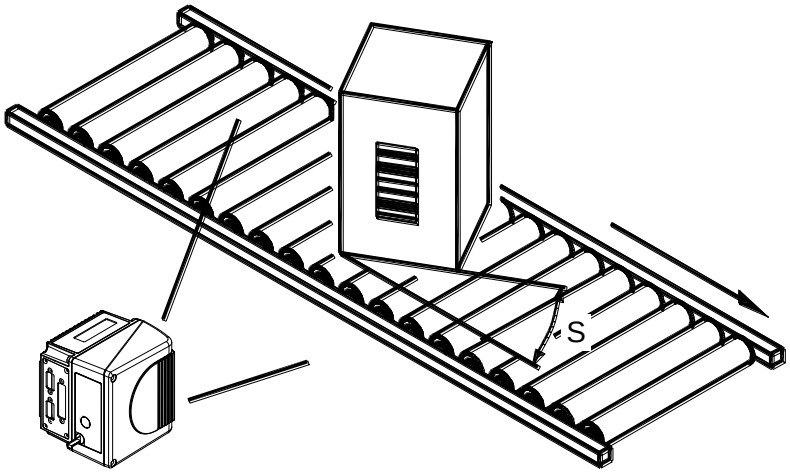


**Figure 19 - "Skew" Angle**

The **Tilt** angle is represented by the value **T** in Figure 20.

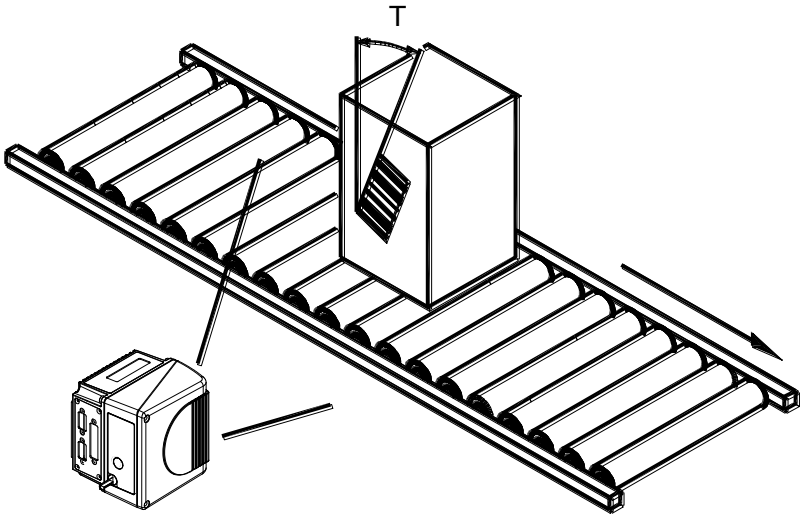


**Figure 20 - "Tilt" Angle**

### 2.3.1 16° Skew Positioning

The DS6300 scanner is mounted on the ST-237 106° mounting bracket (see Figure 9) which guarantees a built-in Skew angle (**S** in the figure below) of 16° with respect to the frame plane (typically the Skew angle should be between 10° - 20°). This avoids the direct reflection of the laser light emitted by the scanner. Furthermore, the bracket guides allow adjusting the Tilt angle (**T** in the figure below, which is typically 0°) for the best scanner orientation:

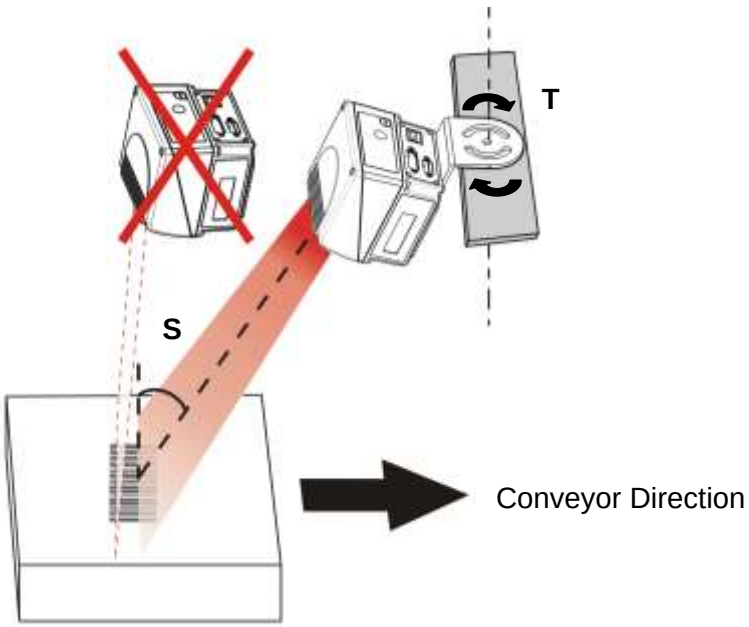


**Figure 21 – Standard Installation**

### 2.3.2 45° Skew Positioning

The DS6300 scanner is mounted on the ST-210 90° mounting bracket (see Figure 11). By adjusting the mounting bracket guides, reach 45° for the Skew angle (**S** in the figure below) to avoid the direct reflection of the laser light emitted by the scanner:

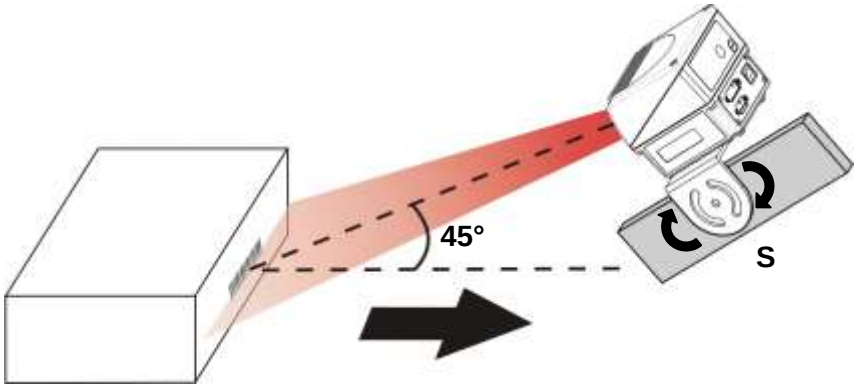


**Figure 22 – 45° Skew Installation**

**CAUTION**

*If using the 45° Skew installation, the scanner reading performance is not guaranteed to match that measured for the standard installation with Skew angle between 10° - 20° (see reading diagrams in par. 9.4).*

**NOTE**

*The ST-210 mounting bracket is an accessory of the DS6300 standard model available in the US-60 kit (890001020).*

# 3 CBX ELECTRICAL CONNECTIONS

Each scanner model has the following connectors:

| Scanner Model | Connectors |
|---|---|
| Master/Slave | 25-pin male serial interface and I/O connector<br>9-pin male Lonworks connector ***(see caution below)***<br>9-pin female Lonworks connector |
| Ethernet | 26-pin male serial interface and I/O connector<br>9-pin female Lonworks connector<br>M12 4-pin D-coded connector for Ethernet * |
| DeviceNet | 26-pin male serial interface and I/O connector<br>9-pin female Lonworks connector<br>5-pin male connector |
| Profibus | 26-pin male serial interface and I/O connector<br>9-pin female Lonworks connector<br>9-pin female Profibus connector |

* older models have RJ45 modular connector for Ethernet

**CAUTION**

*Do not connect an RS232 port to the 9-pin Lonworks Connector. This may damage your Laptop PC.*

DS6300 Master/Slave models can connect their 25-pin male D-sub connector for connection to the power supply, serial interface and input/output signals to a CBX connection box by using the dedicated cables (**CAB-Sxx**).

DS6300 Fieldbus models can connect their 26-pin male D-sub connector for connection to the power supply, serial interface and input/output signals to a CBX connection box by using the dedicated cables (**CAB-F0x**).

We recommend making system connections through one of the CBX connection boxes since they offer the advantages of easy connection, easy device replacement, filtered reference signals and Backup and Restore features with the accessory BM100 module.

**NOTE**

*If you require direct wiring to the scanner the details of the connector pins and relative connections are indicated in Chaper 4.*

For Lonworks network connections see chapters 5 and 7.

For Fieldbus connections see chapters 6 and 7.

For ID-NET™ Fixed Baudrate connections see the Application Note on the CD-ROM.

The table below gives the pinout of the CBX100/500 terminal block connectors. Use this pinout when the DS6300 reader is connected by means of the CBX100/500:

| CBX100/500 Terminal Block Connectors | | | | |
|---|---|---|---|---|
| **Group** | **Name** | **Function** | | |
| **Input Power** | Vdc | Power Supply Input Voltage + | | |
| | GND | Power Supply Input Voltage - | | |
| | Earth | Protection Earth Ground | | |
| **External Trigger (PS) Input** | +V | Power Source – External Trigger | | |
| | I1A | External Trigger A (polarity insensitive) for PS | | |
| | I1B | External Trigger B (polarity insensitive) for PS | | |
| | -V | Power Reference – External Trigger | | |
| **Encoder or Generic Input** | +V | Power Source – Inputs | | |
| | I2A | Input 2A (polarity insensitive) for Encoder | | |
| | I2B | Input 2B (polarity insensitive) for Encoder | | |
| | -V | Power Reference – Inputs | | |
| **Outputs** | +V | Power Source – Outputs | | |
| | -V | Power Reference – Outputs | | |
| | O1+ | Output 1+ | | |
| | O1- | Output 1- | | |
| | O2+ | Output 2+ | | |
| | O2- | Output 2- | | |
| **Other I/O (CBX500 only)** | O3A | Output 3A (polarity insensitive) | | |
| | O3B | Output 3B (polarity insensitive) | | |
| | +V | Power Source – Other I/O | | |
| | I3A | Input 3A (polarity insensitive) | | |
| | I4A | Input 4A (polarity insensitive) | | |
| | -V | Power Reference – Other I/O | | |
| | I34B | Input 3B and 4B (common) (polarity insensitive) | | |
| | I34B | Input 3B and 4B (common) (polarity insensitive) | | |
| **Auxiliary Interface** | TX | Auxiliary Interface TX | | |
| | RX | Auxiliary Interface RX | | |
| | SGND | Auxiliary Interface Reference | | |
| **ID-NET™** | REF | Reserved | | |
| | ID+ | Reserved | | |
| | ID- | Reserved | | |
| **Network** | Shield | Network Cable Shield | | |
| | | **RS232** | **RS485FD** | **RS485HD** |
| **Main Interface** | | TX | TX+ | RTX+ |
| | | RTS | TX- | RTX- |
| | | RX | *RX+ | |
| | | CTS | *RX- | |
| | | SGND | SGND | SGND |

***** Do not leave floating, see par. 3.2.2 for connection details.

**CAUTION**

*Do not connect GND and SGND to different (external) ground references. GND and SGND are internally connected through filtering circuitry which can be permanently damaged if subjected to voltage drops over 0.8 Vdc.*

**CAUTION**

*DS6300 scanners do not support Host Interface Modules with the CBX500. Use the CBX800 Gateway for Host Interface Applications, (Fieldbus and non Fieldbus).*

**NOTE**

*To avoid electromagnetic interference when the scanner is connected to a CBX connection box, verify the jumper positions in the CBX as indicated in its Installation Manual.*

## 3.1 POWER SUPPLY

Power can be supplied to the scanner through the CBX100/500 spring clamp terminal pins as shown in Figure 23:

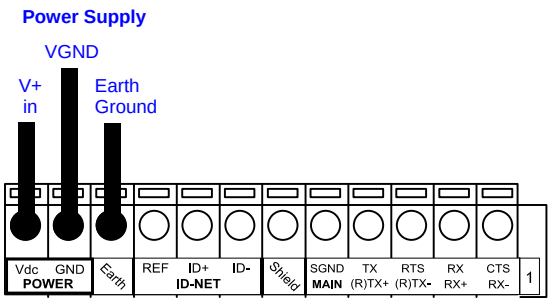


**Figure 23 - Power Supply Connections**

The power must be between 15 and 30 Vdc only. The max. power consumption is 20 W including startup current.

Datalogic strongly recommends a minimum 24 Vdc supply voltage when using a master/slave configuration. Several accessory power supplies are available to power the DS6300 and reading station components. See par. 1.7.

A security system allows the laser to activate only once the motor has reached the correct rotational speed; consequently, the laser beam is generated after a slight delay from the power on of the scanner.

DS6300 scanners have power ground GND (25/26-pin connector pin 23, 25, 26) as well as the cable Shield (25/26-pin connector pin 1) internally connected to the chassis. It is recommended to connect the device chassis to earth ground (Earth) by setting the appropriate jumper in the CBX connection box. See the CBX Installation Manual for details.

## 3.2 MAIN SERIAL INTERFACE

The main serial interface is compatible with the following electrical standards and the relative signals are available on the CBX spring clamp terminal blocks:

**RS232**

**RS485 full-duplex**

**RS485 half-duplex**

**The main interface type and the relative parameters (baud rate, data bits, etc.) can be set using the Genius™ utility program or the Genius™ based Host Mode Programming procedure. For more details refer to the section "Main Serial Port" in the Genius™ Help On Line.**

### 3.2.1 RS232 Interface

The main serial interface is used in this case for point-to-point connections; it handles communication with the host computer and allows both transmission of code data and the programming of the scanner. This is the default setting.

The following pins are used for RS232 interface connection:

| CBX100/500 | Function |
|---|---|
| TX | Transmit Data |
| RX | Receive Data |
| RTS | Request To Send |
| CTS | Clear To Send |
| SGND | Signal Ground |

It is always advisable to use shielded cables. If the shield is tied to ground at the Host, then leave it floating at the CBX. If it is floating at the Host then tie it to Shield at the CBX. The overall maximum cable length must be less than 15 m (50 ft).

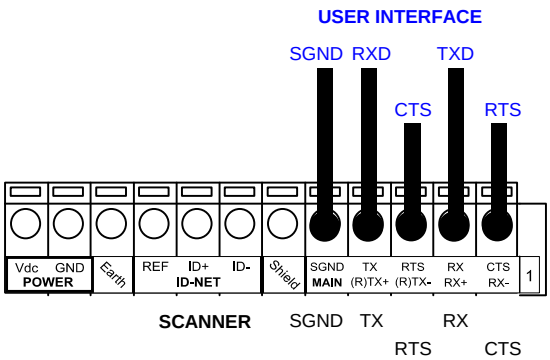


**Figure 24 – RS232 Main Interface Connections Using Hardware Handshaking**

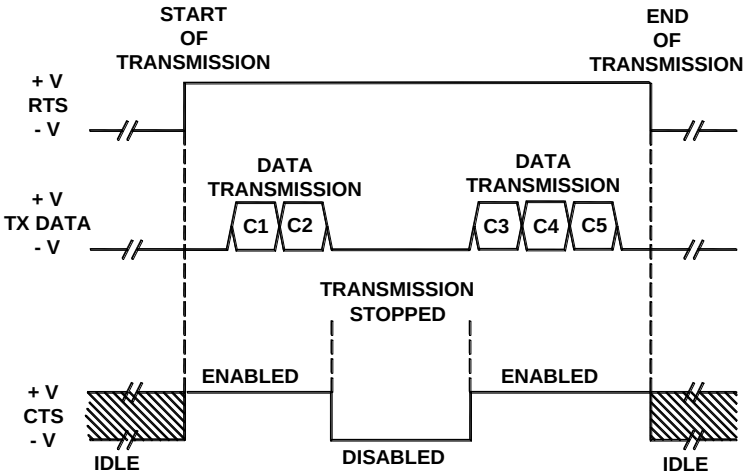


**Figure 25 - RS232 Control Signals**

The RTS and CTS signals control data transmission and synchronize the connected devices.

If the RTS/CTS handshaking protocol is enabled, the DS6300 activates the RTS output to indicate a message is to be transmitted. The receiving unit activates the CTS input to enable the transmission.

### 3.2.2 RS485 Full-Duplex Interface

The RS485 full-duplex (5 wires + shield) interface is used for non-polled communication protocols in point-to-point connections over longer distances (max 1200 m / 3940 ft) than those acceptable for RS232 communications or in electrically noisy environments.

If the shield is tied to ground at the Host, then leave it floating at the CBX. If it is floating at the Host then tie it to Shield at the CBX.

The CBX pinout follows:

| CBX100/500 | Function |
|---|---|
| TX+ | RS485 Transmit Data + |
| RX+ | RS485 Receive Data + |
| TX- | RS485 Transmit Data - |
| RX- | RS485 Receive Data - |
| SGND | Signal Ground |

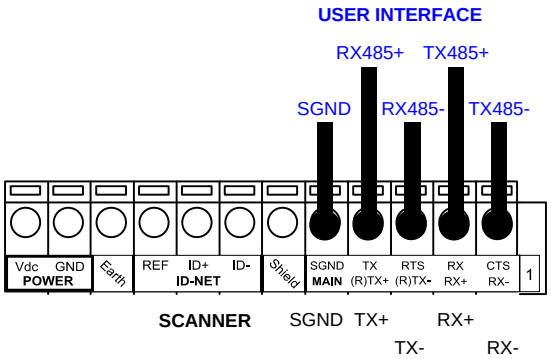


**Figure 26 - RS485 Full-duplex Connections**

**NOTE**

*For applications that do not use RX485 signals, do not leave these lines floating but connect them to SGND as shown below.*

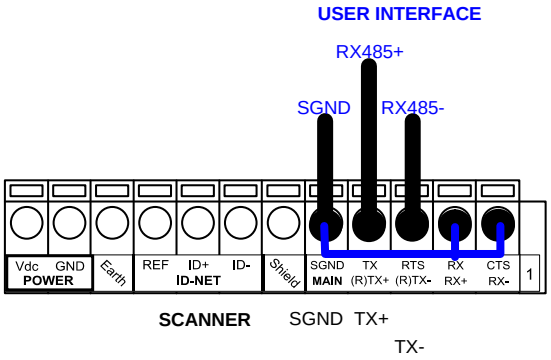


**Figure 27 - RS485 Full-duplex Connections using Only TX Signals**

### 3.2.3 RS485 Half-Duplex Interface

**NOTE**

*This interface is provided for backward compatibility. We recommend using the more efficient Lonworks network for Master/Slave or Multiplexer layouts.*

The RS485 half-duplex (3 wires + shield) interface is used for polled communication protocols.

It can be used for Multidrop connections with a Datalogic Multiplexer, (see par. "Multiplexer" in Appendix A) exploiting a proprietary protocol based on polled mode called MUX32 protocol, where a master device polls slave devices to collect data. The overall maximum cable length should not exceed 1200 m (3940 ft).

If the shield is tied to ground at the Host, then leave it floating at the CBX. If it is floating at the Host then tie it to Shield at the CBX.

| CBX100/500 | Function |
|---|---|
| RTX+ | RS485 Receive/Transmit Data + |
| RTX- | RS485 Receive/Transmit Data - |
| SGND | Signal Ground |

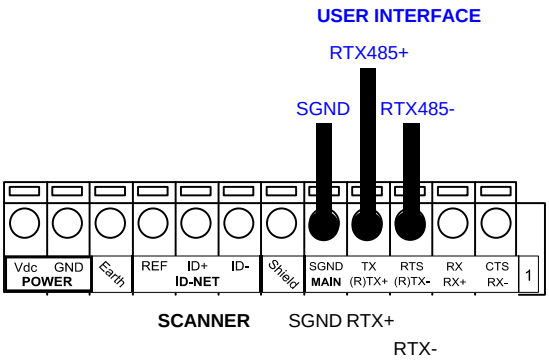


**Figure 28 - RS485 Half-duplex Connections**

This interface is forced by software when the protocol selected is MUX32 protocol.

In a Multiplexer layout, the Multidrop address must also be set via serial channel by the Genius™ utility or by the Host Programming Mode.

Figure 29 shows a multidrop configuration with DS6300 scanners connected to a Multiplexer.

**CAUTION**

*This is an example of multidrop wiring. Consult the multiplexer manual for complete wiring instructions.*

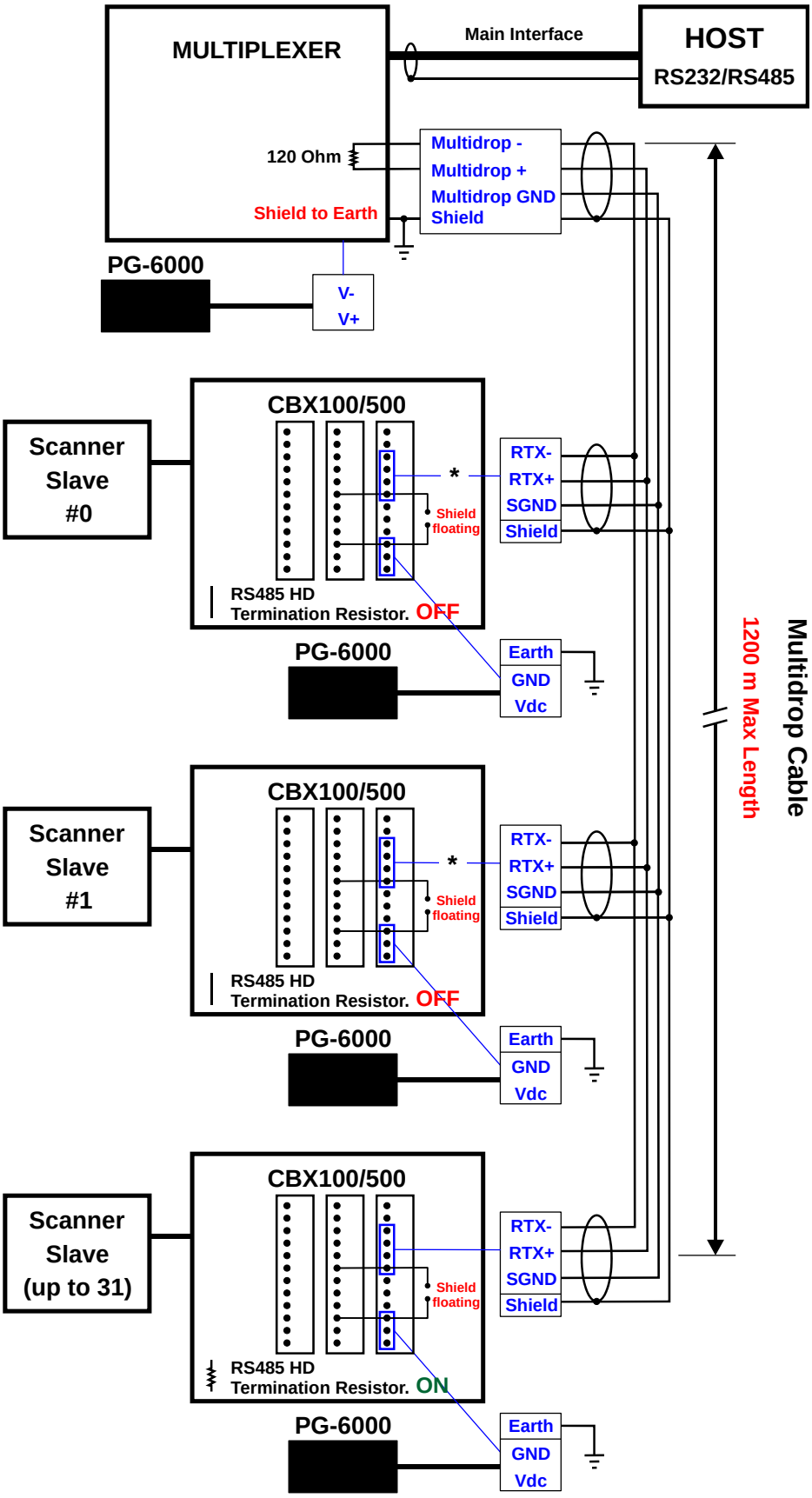


**Figure 29 - DS6300 Multidrop Connection to a Multiplexer**

***** When using CBX500, the **Main** interface multidrop network signals: **Shield**, **SGND**, **RTX+**and **RTX-** are repeated on terminal connector row 4 to facilitate system cabling.

## 3.3 AUXILIARY RS232 INTERFACE

The auxiliary serial interface is used exclusively for RS232 point-to-point connections. It is principally used for scanner configuration from a laptop PC but is also available for LOCAL ECHO to a monitoring PC or for Pass through layouts. This interface is active when the Data Tx parameter is enabled.

The parameters relative to the aux interface (baud rate, data bits, etc.) can be defined using the Genius™ utility program or Genius™ based Host Mode Programming installed from the CD-ROM.

The 9-pin female Auxiliary Interface connector inside the CBX is the preferred connector for device configuration or temporary communication monitoring.

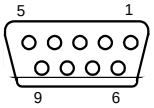


**Figure 30 - 9-pin female connector**

If permanent system wiring is required, the following pins are used to connect the RS232 auxiliary interface. The overall maximum cable length should not exceed 15 m (50 ft). In this case it is advisable to use shielded cables. If the shield is tied to ground at the Host, then leave it floating at the CBX. If it is floating at the Host then tie it to Shield at the CBX.

| CBX100/500 | Function |
|---|---|
| RX | Auxiliary Interface Receive Data |
| TX | Auxiliary Interface Transmit Data |
| SGND | Auxiliary Interface Reference |

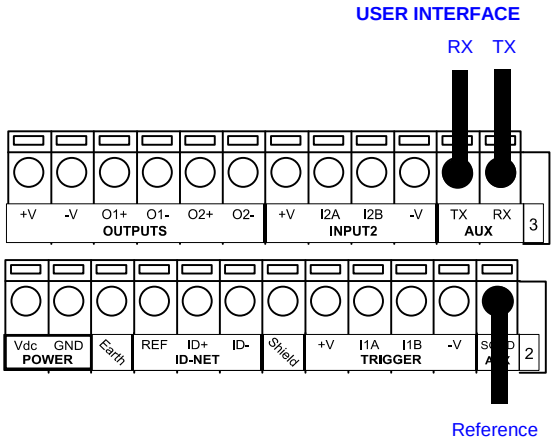


**Figure 31 - RS232 Auxiliary Interface Connections**

**NOTE**

*Do not connect the Aux Interface to the CBX spring clamp connectors and the 9-pin connector simultaneously.*

## 3.4 INPUTS

There are four optocoupled polarity insensitive inputs available on the scanner: Input 1 (External Trigger/PS), Input 2 (Encoder), Input 3 and 4 generic inputs.

The electrical features of the inputs are:

| | |
|---|---|
| Maximum voltage: | 30 Vdc |
| Maximum current Input 1 and 2: | 12 mA (scanner) + 12 mA (CBX) |
| Maximum current Input 3 and 4: | 12 mA (scanner) |

| CBX100/500 | Function |
|---|---|
| +V | Power Source - External Trigger |
| I1A | External Trigger A (polarity insensitive) for PS |
| I1B | External Trigger B (polarity insensitive) for PS |
| I2A | Input 2 A (polarity insensitive) for Encoder |
| I2B | Input 2 B (polarity insensitive) for Encoder |
| I3A (CBX500 only) | Input 3 A (polarity insensitive) |
| I4A (CBX500 only) | Input 4 A (polarity insensitive) |
| I34B (CBX500 only) | Common Reference for Inputs 3 and 4 (polarity insensitive) |
| -V | Power Reference - External Trigger |

The active state of all the inputs is selected in software (open or closed). Refer to the Genius™ Help On Line.

All inputs are optocoupled, polarity insensitive, and driven by a constant current generator; the command signal is filtered through an anti-disturbance circuit which generates a debouncing delay which can be set to 5 ms or 500 μs. In particular, I1 for PS, I3 and I4 share the same value which usually corresponds to 5 ms when using a photoelectric sensor, while I2 is set to 500 μs when this input is used for the Encoder. The maximum Encoder frequency is **2 kHz**.

**Input 1** (External Trigger/PS) is used in the On-Line operating Mode and tells the scanner to scan for a code. The yellow Phase On LED (Figure C, 3) which refers to Input 1 is on only when current flows through the input circuit and therefore when the active state of this input is set to "active open", the LED lights up when the input corresponds to OFF.

**Input 2** is normally used for the Encoder input. The Encoder detects the conveyor speed.

**Inputs 3 and 4** can be used as the stop signal for the reading phase.

The debouncing delay value can be changed through the software parameter *Debouncing for Input x*, see the "6-8 K Software Configuration Parameter Guide" or Help file.

**Powering Inputs**

Input devices can be supplied by either scanner power (V+ and V-) or external power supplies (Vext).

Electrical isolation between the input command logic and the scanner is maintained when powering the input devices from an external supply voltage (Vext).

The driving logic of the input signals may be powered, for convenience, with the voltage supply at the CBX terminal block spring clamps (V+) and (V-). In this case, however, the device is no longer electrically isolated. The voltage available on pins V+ and V-, is physically the same as the input power for the scanner (Vdc and GND).

## INPUT 1 (EXTERNAL TRIGGER/PS) CONNECTIONS USING DS6300 POWER

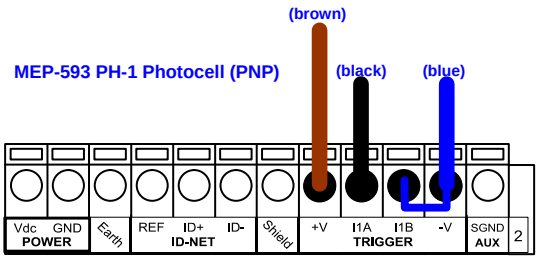


**Figure 32 – MEP-593 PH-1 (PNP) External Trigger/PS Using DS6300 Power**

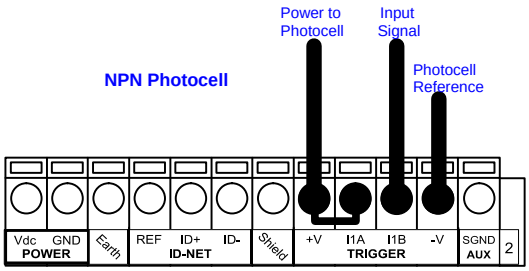


**Figure 33 - NPN External Trigger/PS Using DS6300 Power**

## INPUT 1 (EXTERNAL TRIGGER/PS) CONNECTIONS USING EXTERNAL POWER

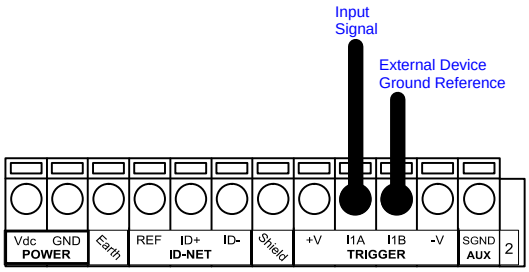


**Figure 34 - PNP External Trigger/PS Using External Power (i.e. PLC signal)**

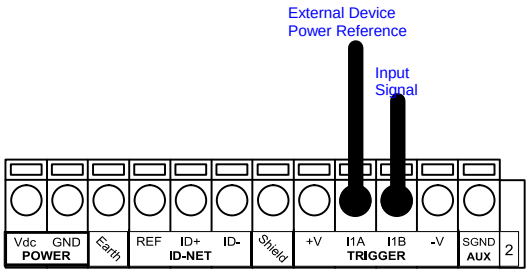


**Figure 35 - NPN External Trigger/PS Using External Power (i.e. PLC signal)**

## INPUT 2 (ENCODER) CONNECTIONS USING DS6300 POWER

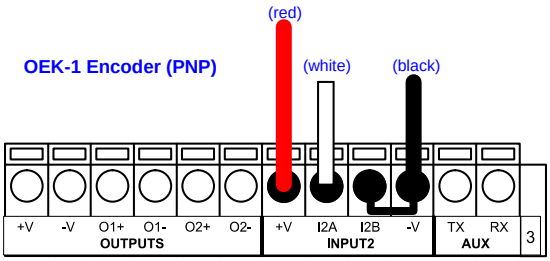


**Figure 36 - OEK-1 Encoder PNP Using DS6300 Power**

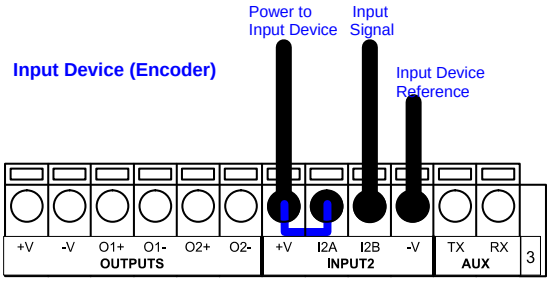


**Figure 37 - Encoder NPN Using DS6300 Power**

## INPUT 2 (ENCODER) CONNECTIONS USING EXTERNAL POWER

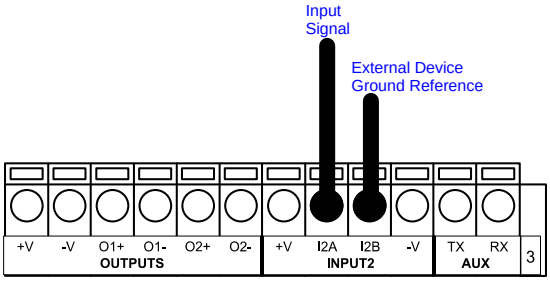


**Figure 38 - PNP Encoder Using External Power (i.e. PLC signal)**

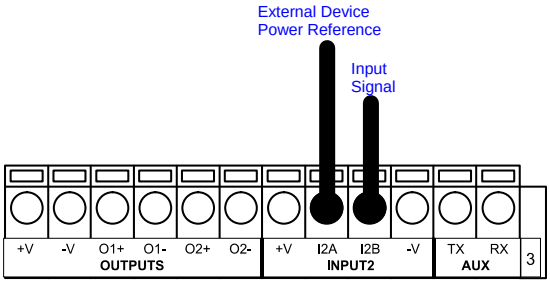


**Figure 39 - NPN Encoder Using External Power (i.e. PLC signal)**

**NOTE**

*Terminal pins **I34B** are common to both inputs 3 and 4 and therefore these inputs cannot be driven by opposite polarity devices.*

## INPUT 3 - 4 CONNECTIONS USING DS6300 POWER (CBX500 Only)

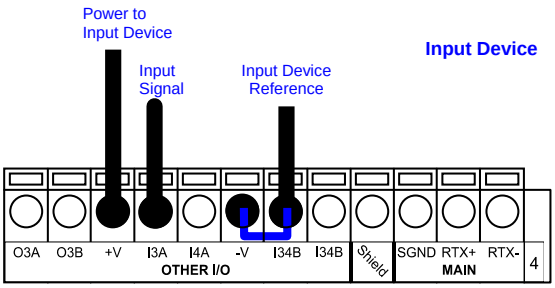


**Figure 40 - PNP Input 3 - 4 Using DS6300 Power**

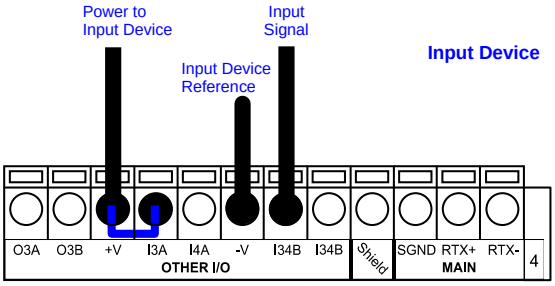


**Figure 41 - NPN Input 3 - 4 Using DS6300 Power**

## INPUT 3 - 4 CONNECTIONS USING EXTERNAL POWER (CBX500 Only)

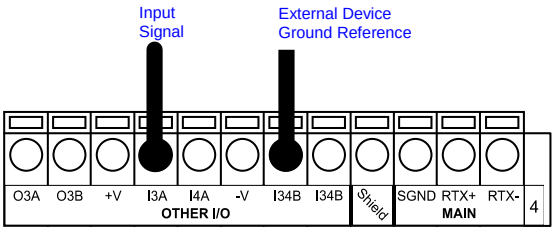


**Figure 42 - PNP Input 3 - 4 Using External Power (i.e. PLC signal)**

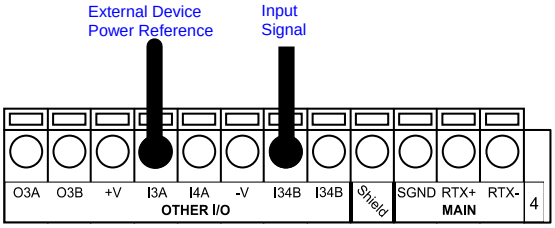


**Figure 43 - NPN Input 3 - 4 Using External Power (i.e. PLC signal)**

### 3.4.1 Code Verifier

If the DS6300 is used as a Code Verifier, the verifier code can be configured in software through the Genius™ configuration program. However it is also possible to use one of the inputs to trigger when the scanner should store a code read as the verifier code.

The Code Verifier parameter must be enabled, and the configuration parameters to allow correct Code Type reading must be saved to the scanner in order to read the verifier code.

When the selected input is activated, the next read code will be stored as the verifier code in the scanner's non-volatile (Flash) memory.

For more details see the Verifier Parameters in the "6-8 K Software Configuration Parameter Guide" or Help file.

## 3.5 OUTPUTS

Three general purpose outputs are available. The electrical features are given below:

| **Outputs 1 and 2** | |
|---|---|
| Maximum Voltage | 30 V |
| Collector Current (pulse) | 130 mA Max. |
| Collector Current (continuous) | 40 mA Max. |
| Saturation Voltage (VCE) | 1 V at 10 mA Max. |
| Maximum Power Dissipation | 90 mW at 50°C (Ambient temperature) |

Output 3 has different electrical features. It is a bi-directional solid state relay with built-in current limit protection.

| **Output 3** | |
|---|---|
| Maximum Voltage | ± 100 V (**Vext only**) |
| Collector Current (pulse) | 300 mA Max. at 25°C (Ambient temperature)<br>240 mA Max. at 50°C (Ambient temperature) |
| Collector Current (continuous) | 200 mA Max. at 25°C (Ambient temperature)<br>150 mA Max. at 50°C (Ambient temperature) |
| R on<br>R off | 6 – 15 Ω<br>> 500 Ω |
| Off-State Leakage Current | < 1 µA |
| Maximum Power Dissipation | 550 mW at 50°C (Ambient temperature) |

| **CBX100/500** | **Function** |
|---|---|
| +V | Power Source - Outputs |
| O1+ | Output 1 + |
| O1- | Output 1 - |
| O2+ | Output 2 + |
| O2- | Output 2 - |
| O3A (CBX500 only) | Output 3 A (polarity insensitive) |
| O3B (CBX500 only) | Output 3 B (polarity insensitive) |
| -V | Power Reference Outputs |

The function of each output can be defined by the user (No Read, Right, Wrong, etc.). Refer to the Genius™ Help On Line.

The output signals are fully programmable being determined by the configured Activation/Deactivation events, Deactivation Timeout or a combination of the two.

By default, Output 1 is associated with the Complete Read event, which activates when all the selected codes are correctly decoded, and Output 2 is associated with the No Read event, which activates when the code signaled by the external trigger/PS is not decoded.

Output 3 can be assigned to the same events and it has the advantage of being polarity insensitive. By default it is not assigned to any event. The CBX500 must be used to connect this output.

## OUTPUT 1 and 2 CONNECTIONS USING DS6300 POWER

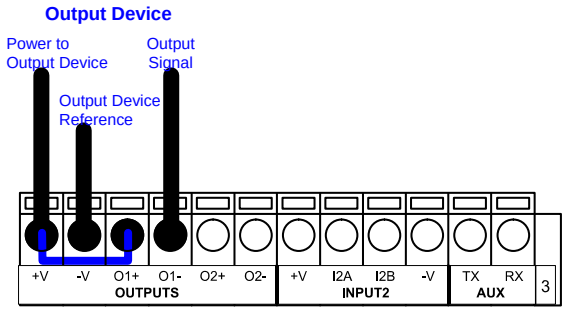


**Figure 44 - Open Emitter Output Using DS6300 Power**

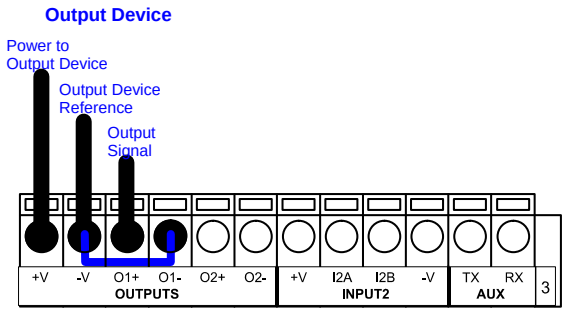


**Figure 45 - Open Collector Output Using DS6300 Power**

## OUTPUT 1 and 2 CONNECTIONS USING EXTERNAL POWER

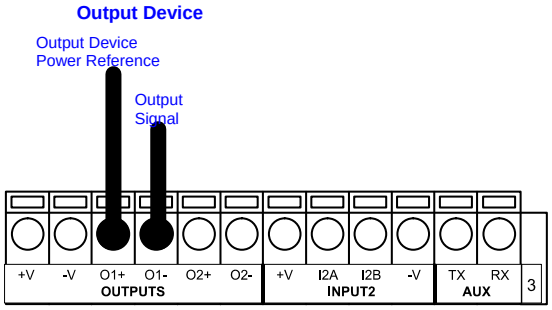


**Figure 46 - Open Emitter Output Using External Power**

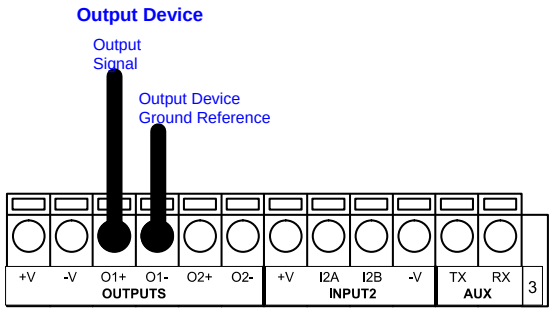


**Figure 47 - Open Collector Output Using External Power**

## OUTPUT 3 CONNECTIONS USING DS6300 POWER (CBX500 Only)

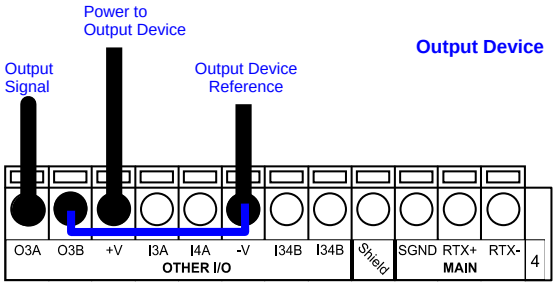


**Figure 48 - Output 3 Using DS6300 Power**

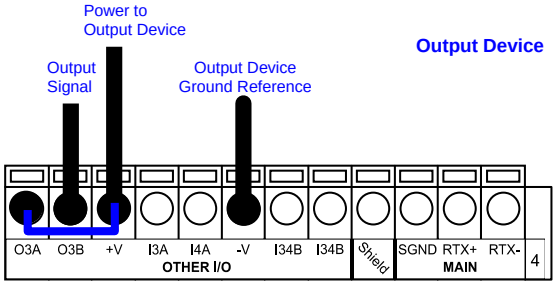


**Figure 49 - Output 3 Using DS6300 Power**

**OUTPUT 3 CONNECTIONS USING EXTERNAL POWER (CBX500 Only)**

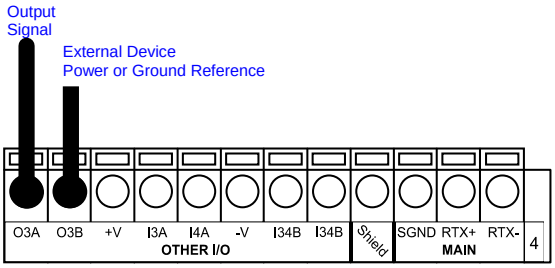


**Figure 50 - Ouput 3 Using External Power**

The command signals are filtered and generate a delay of about 50 µs for Output 1 and 2 and 1 ms for Output 3.

## 3.6 USER INTERFACE - HOST

The following table contains the pinout for standard RS232 PC Host interface. For other user interface types please refer to their own manual.

| RS232 PC-side connections | | | |
|---|---|---|---|
| 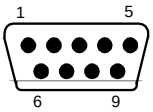  9-pin male connector | | 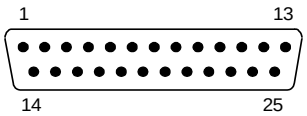  25-pin male connector | |
| **Pin** | **Name** | **Pin** | **Name** |
| 2 | RX | 3 | RX |
| 3 | TX | 2 | TX |
| 5 | GND | 7 | GND |
| 7 | RTS | 4 | RTS |
| 8 | CTS | 5 | CTS |

# 4 CUSTOM CABLE ELECTRICAL CONNECTIONS

Each scanner model has the following connectors:

| Scanner Model | Connectors |
|---|---|
| Master/Slave | 25-pin male serial interface and I/O connector<br>9-pin male Lonworks connector *(**see caution below**)*<br>9-pin female Lonworks connector |
| Ethernet | 26-pin male serial interface and I/O connector<br>9-pin female Lonworks connector<br>M12 4-pin D-coded connector for Ethernet * |
| DeviceNet | 26-pin male serial interface and I/O connector<br>9-pin female Lonworks connector<br>5-pin male connector |
| Profibus | 26-pin male serial interface and I/O connector<br>9-pin female Lonworks connector<br>9-pin female Profibus connector |

* older models have RJ45 modular connector for Ethernet

**CAUTION**

*Do not connect an RS232 port to the 9-pin Lonworks Connector. This may damage your Laptop PC.*

DS6300 scanners are equipped with a 25-pin male D-sub connector (Master/Slave models) or a 26-pin male D-sub connector (Fieldbus models) for connection to the host computer, power supply and input/output signals. These signals can be wired using a custom cable according to the application needs.

The paragraphs in this chapter detail the individual signal connections.

For Lonworks network connections see chapters 5 and 7.

For Fieldbus connections see chapters 6 and 7.

For ID-NET™ Fixed Baudrate connections see the Application Note on the CD-ROM.

The details of the connector pins are indicated in the following table:

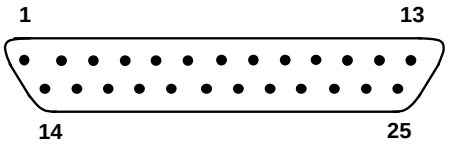


**Figure 51 - 25-pin Connector**

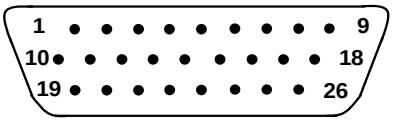


**Figure 52 - 26-pin Connector**

| DS6300 25/26-pin D-sub Connector Pinout | | |
|---|---|---|
| **Pin** | **Name** | **Function** |
| 1 | CHASSIS | Chassis - internally connected to GND<br>Cable shield connected to chassis |
| 20 | RX | Receive Data of Auxiliary RS232 (referred to GND) |
| 21 | TX | Transmit Data of Auxiliary RS232 (referred to GND) |
| 8 | O1+ | Configurable Digital Output 1 - positive pin |
| 22 | O1- | Configurable Digital Output 1 - negative pin |
| 11 | O2+ | Configurable Digital Output 2 - positive pin |
| 12 | O2- | Configurable Digital Output 2 - negative pin |
| 16 | O3A | Configurable Digital Output 3 - polarity insensitive |
| 17 | O3B | Configurable Digital Output 3 - polarity insensitive |
| 18 | I1A | External Trigger (polarity insensitive) for PS |
| 19 | I1B | External Trigger (polarity insensitive) for PS |
| 6 | I2A | Input Signal 2 (polarity insensitive) for Encoder |
| 10 | I2B | Input Signal 2 (polarity insensitive) for Encoder |
| 14 | I3A | Input Signal 3 (polarity insensitive) |
| 15 | I4A | Input Signal 4 (polarity insensitive) |
| 24 | I34B | Common reference of Input 3 and Input 4 (polarity insensitive) |
| 9,13 | Vdc | Power Supply Input Voltage + |
| 23,25,26 | GND | Power Supply Input Voltage - |

| Main Interface Connector Pinout | | | | |
|---|---|---|---|---|
| **Pin** | | **RS232** | **RS485 Full Duplex** | **RS485 Half Duplex** |
| 2 | | TX | TX+ | RTX+ |
| 3 | | RX | *RX+ | |
| 4 | | RTS | TX- | RTX- |
| 5 | | CTS | *RX- | |
| 7 | | GND_ISO | GND_ISO | GND_ISO |

***** Do not leave floating, see par. 4.2.2 for connection details.

Pin 26 is only available for Fieldbus (Ethernet, DeviceNet, or Profibus) models.

## 4.1 POWER SUPPLY

The supply voltage for correct operation of the scanner must be between 15 and 30 VDC. The max. power consumption is 20 W including startup current.

Datalogic strongly recommends a minimum 24 Vdc supply voltage when using a master/slave configuration. Several accessory power supplies are available to power the DS6300 and reading station components. See par. 1.7.

A security system allows the laser to activate only once the motor has reached the correct rotational speed; consequently, the laser beam is generated after a slight delay from the power on of the scanner.

DS6300 scanners have power ground GND (25/26-pin connector pin 23, 25, 26) as well as the cable Shield (25/26-pin connector pin 1) internally connected to the chassis.

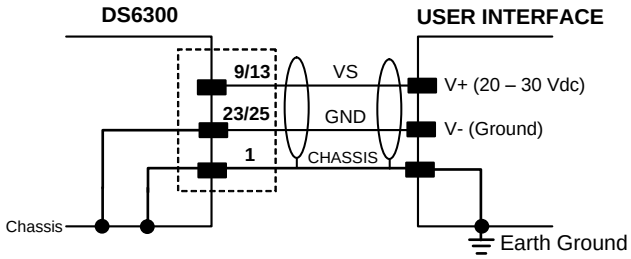


**Figure 53 – Power Supply Using the 25/26-pin Connector**

## 4.2 MAIN SERIAL INTERFACE

The main serial interface is compatible with the following electrical standards:

**RS232**

**RS485 full-duplex**

**RS485 half-duplex**

**The main interface type and the relative parameters (baud rate, data bits, etc.) can be set using the Genius™ utility program or the Genius™ based Host Mode Programming procedure. For more details refer to the section "Main Serial Port" in the Genius™ Help On Line.**

### 4.2.1 RS232 Interface

The main serial interface is used for communication with the Host computer and allows both transmission of code data and configuring the reader. The overall maximum cable length should not exceed 15 m (50 ft).

The following pins of the 25/26-pin connector are used for RS232 interface connection:

| Pin | Name | Function |
|---|---|---|
| 2 | TX | Transmit |
| 3 | RX | Receive |
| 4 | RTS | Request to send |
| 5 | CTS | Clear to send |
| 7 | GND_ISO | Main signal ground |

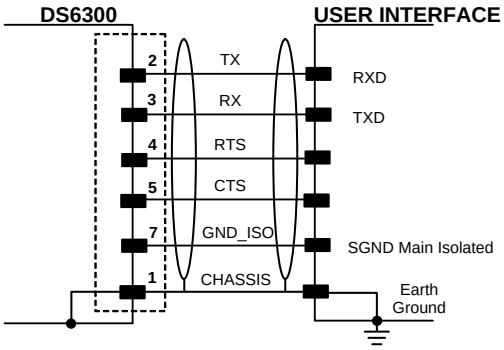


**Figure 54 - RS232 Connections**

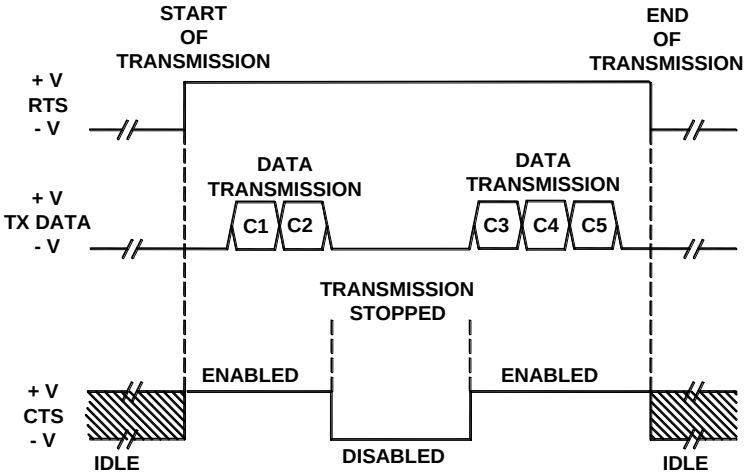


**Figure 55 - RS232 Control Signals**

The RTS and CTS signals control data transmission and synchronize the connected devices.

If the RTS/CTS handshaking protocol is enabled, the DS6300 activates the RTS output to indicate a message is to be transmitted. The receiving unit activates the CTS input to enable the transmission.

### 4.2.2 RS485 Full-Duplex Interface

The RS485 full-duplex (5 wires + shield) interface is used for non-polled communication protocols in point-to-point connections over longer distances than those acceptable for RS232 communications or in electrically noisy environments. The overall maximum cable length should not exceed 1200 m (3940 ft).

The following pins of the 25/26-pin connector are used for RS485 full-duplex interface connection:

| Pin | Name | Function |
|---|---|---|
| 2 | TX+ | RS485 output (+) |
| 3 | RX+ | RS485 input (+) |
| 4 | TX- | RS485 output (-) |
| 5 | RX- | RS485 input (-) |
| 7 | GND_ISO | Main signal ground |

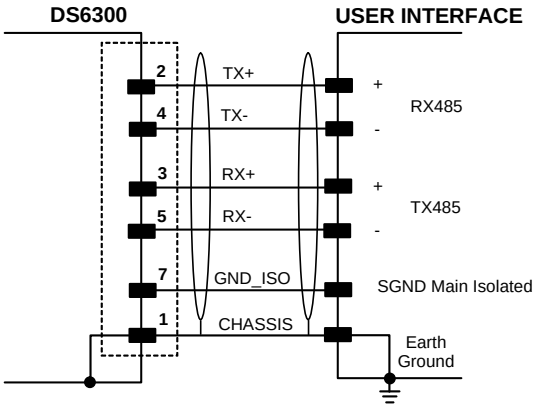


**Figure 56 - RS485 Full-Duplex Interface Connections**

**NOTE**

*For applications that do not use RX485 signals, do not leave these lines floating but connect them to GND_ISO as shown below.*

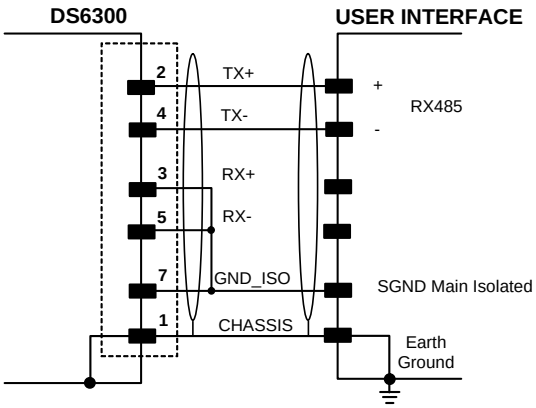


**Figure 57 - RS485 Full-Duplex Connections using Only TX Signals**

### 4.2.3 RS485 Half-Duplex Interface

**NOTE**

*This interface is provided for backward compatibility. We recommend using the more efficient Lonworks network for Master/Slave or Multiplexer layouts.*

The RS485 half-duplex (3 wires + shield) interface can be used for polled communication protocols.

It can be used for Multidrop connections with a Datalogic Multiplexer, (see par. "Multiplexer" in Appendix A) exploiting a proprietary protocol based on polled mode called MUX32 protocol, where a master device polls slave devices to collect data. The overall maximum cable length should not exceed 1200 m (3940 ft).

The following pins of the 25/26-pin connector are used for RS485 half-duplex interface connection:

| Pin | Name | Function |
|---|---|---|
| 2 | RTX+ | RS485 input/output (+) |
| 4 | RTX- | RS485 input/output (-) |
| 7 | GND_ISO | Main signal ground |

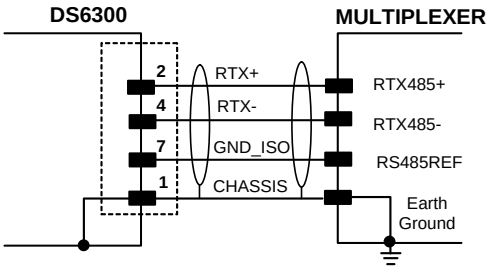


**Figure 58 – RS485 Half-Duplex Interface Connections**

This interface is forced by software when the protocol selected is MUX32 protocol.

In a Multiplexer layout, the Multidrop address must also be set via serial channel by the Genius™ utility or by the Host Programming Mode.

Figure 59 shows a multidrop configuration with DS6300 scanners connected to a Multiplexer.

**CAUTION**

*This is an example of multidrop wiring. Consult the multiplexer manual for complete wiring instructions.*

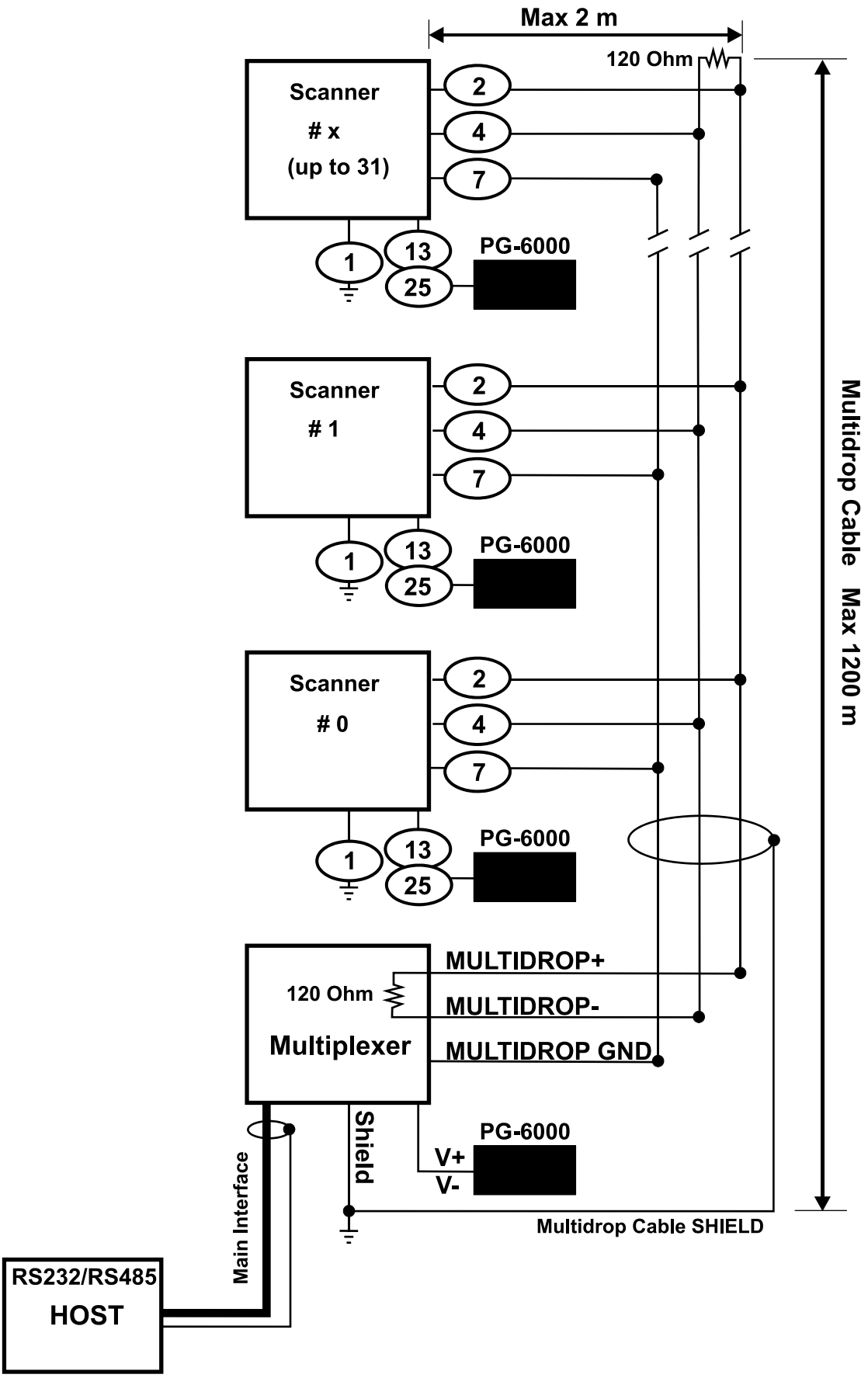


**Figure 59 – DS6300 Multidrop Connection to a Multiplexer**

## 4.3 AUXILIARY INTERFACE

The auxiliary serial interface is used exclusively for RS232 point-to-point connections. It is principally used for scanner configuration from a laptop PC but is also available for LOCAL ECHO to a monitoring PC or for Pass through layouts. This interface is active when the Data Tx parameter is enabled. The overall maximum cable length should not exceed 15 m (50 ft).

The following pins of the 25/26-pin connector are used for RS232 full-duplex interface connection:

| Pin | Name | Function |
|---|---|---|
| 20 | RX | Receive data |
| 21 | TX | Transmit data |
| 23 | GND | Common Ground |

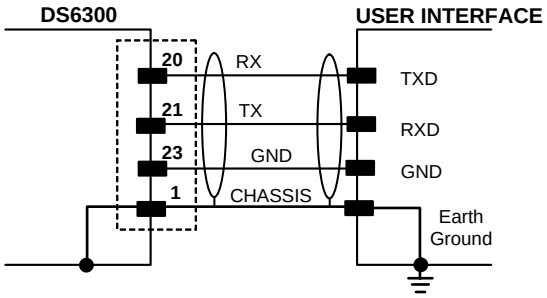


**Figure 60 - RS232 Auxiliary Interface Connections**

## 4.4 INPUTS

There are four optocoupled polarity insensitive inputs available on the 25/26-pin connector of the DS6300 scanner: Input 1 (External Trigger/PS), Input 2 (Encoder), Input 3 and 4 generic inputs:

The electrical features of these inputs are:

| | |
|---|---|
| Maximum voltage | 30 Vdc |
| Maximum current all Inputs: | 12 mA |

| Pin | Name | Function |
|---|---|---|
| 18 | I1A | External Trigger (polarity insensitive) for PS |
| 19 | I1B | External Trigger (polarity insensitive) for PS |
| 6 | I2A | Input Signal 2 (polarity insensitive) for Encoder |
| 10 | I2B | Input Signal 2 (polarity insensitive) for Encoder |
| 14 | I3A | Input Signal 3 (polarity insensitive) |
| 15 | I4A | Input Signal 4 (polarity insensitive) |
| 24 | I34B | Common Reference of Input 3 and Input 4 (polarity insensitive) |

The active state of all the inputs is selected in software (open or closed). Refer to the Genius™ Help On Line.

All inputs are optocoupled, polarity insensitive, and driven by a constant current generator; the command signal is filtered through an anti-disturbance circuit which generates a debouncing delay which can be set to 5 ms or 500 μs. In particular, I1 for PS, I3 and I4 share

the same value which usually corresponds to 5 ms when using a photoelectric sensor, while I2 is set to 500 μs when this input is used for the Encoder. The maximum Encoder frequency is **2 kHz**.

**Input 1** (External Trigger/PS) is used in the On-Line operating Mode and tells the scanner to scan for a code. The yellow Phase On LED (Figure C, 3) which refers to Input 1 is on only when current flows through the input circuit and therefore when the active state of this input is set to "active open", the LED lights up when the input corresponds to OFF.

**Input 2** is normally used for the Encoder input. The Encoder detects the conveyor speed.

**Inputs 3 and 4** can be used as the stop signal for the reading phase.

The debouncing delay value can be changed through the software parameter *Debouncing for Input x*, see the "6-8 K Software Configuration Parameter Guide" or Help file.

**Powering Inputs**

Input devices can be supplied by either scanner power (Vdc and GND) or external power supplies (Vext).

Electrical isolation between the input command logic and the scanner is maintained when powering the input devices from an external supply voltage (Vext).

The driving logic of the input signals may be powered, for convenience, with the voltage supply between pins 9 (Vdc) and 23 (GND) of the 25/26-pin I/O connector. In this case, however, the device is no longer electrically isolated. The voltage available on the 25/26-pin I/O connector, is physically the same as used to power the scanner.

**INPUT 1 - 2 CONNECTIONS USING DS6300 POWER**

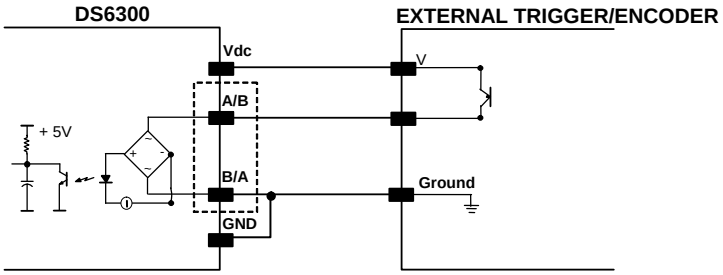


**Figure 61 - PNP Command Input Connection Using Scanner Power**

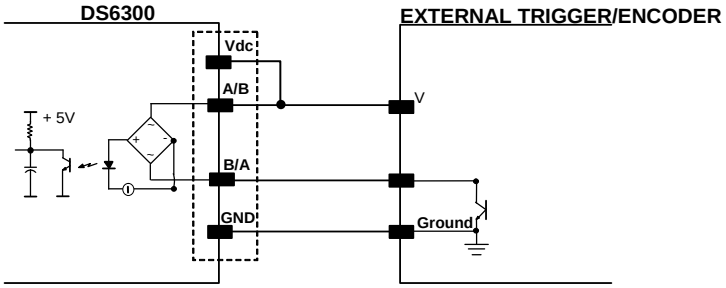


**Figure 62 - NPN Command Input Connection Using Scanner Power**

## INPUT 1 - 2 CONNECTIONS USING EXTERNAL POWER

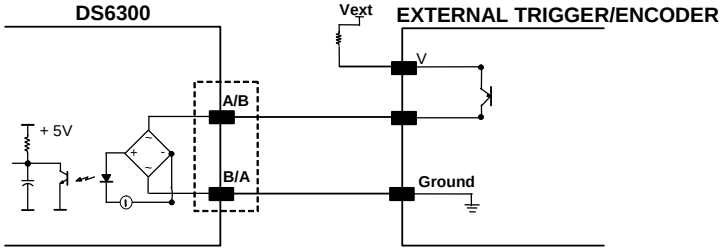


**Figure 63 – PNP Command Input Connection Using External Power**

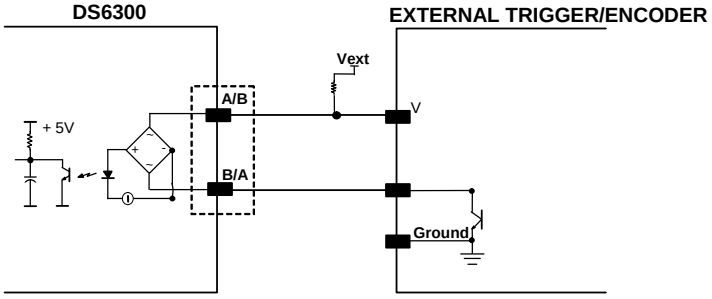


**Figure 64 - NPN Command Input Connection Using External Power**

**NOTE**

*Terminal pins **I34B** are common to both inputs 3 and 4 and therefore these inputs cannot be driven by opposite polarity devices.*

## INPUT 3 - 4 CONNECTIONS USING DS6300 POWER

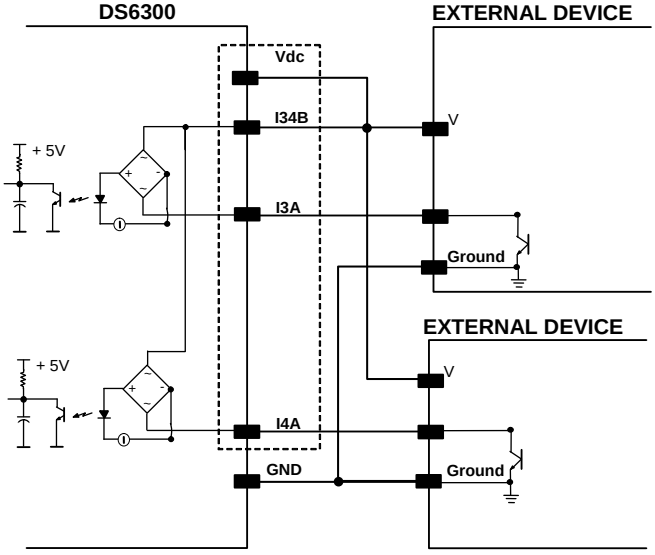


**Figure 65 - I3/I4 NPN Input Command using Scanner Power**

**INPUT 3 - 4 CONNECTIONS USING EXTERNAL POWER**

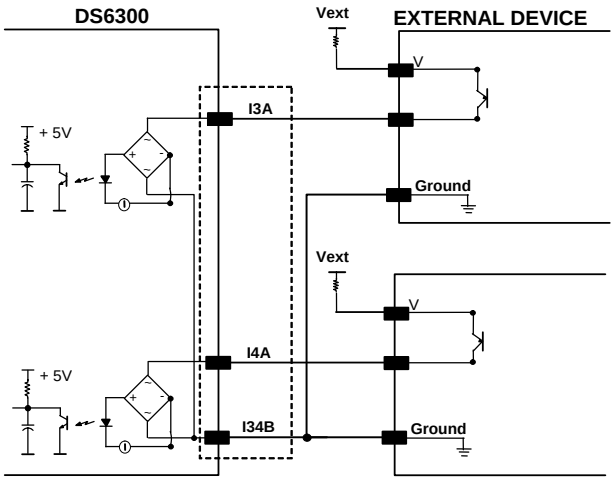


**Figure 66 - I3/I4 PNP Input Command using External Power**

## 4.4.1 Code Verifier

If the DS6300 is used as a Code Verifier, the verifier code can be configured in software through the Genius™ configuration program. However it is also possible to use one of the inputs to trigger when the scanner should store a code read as the verifier code.

The Code Verifier parameter must be enabled, and the configuration parameters to allow correct Code Type reading must be saved to the scanner in order to read the verifier code.

When the selected input is activated, the next read code will be stored as the verifier code in the scanner's non-volatile (Flash) memory.

For more details see the Verifier Parameters in the "6-8 K Software Configuration Parameter Guide” or Help file.

## 4.5 OUTPUTS

Three general purpose outputs are available. The electrical features are given below:

| **Outputs 1 and 2** | |
|---|---|
| Maximum Voltage | 30 V |
| Collector Current (pulse) | 130 mA Max. |
| Collector Current (continuous) | 40 mA Max. |
| Saturation Voltage (VCE) | 1 V at 10 mA Max. |
| Maximum Power Dissipation | 90 mW at 50°C (Ambient temperature) |

Output 3 has different electrical features. It is a bi-directional solid state relay with built-in current limit protection.

| **Output 3** | |
|---|---|
| Maximum Voltage | ± 100 V (**Vext only**) |
| Collector Current (pulse) | 300 mA Max. at 25°C (Ambient temperature)<br>240 mA Max. at 50°C (Ambient temperature) |
| Collector Current (continuous) | 200 mA Max. at 25°C (Ambient temperature)<br>150 mA Max. at 50°C (Ambient temperature) |
| R on<br>R off | 6 – 15 Ω<br>> 500 Ω |
| Off-State Leakage Current | < 1 µA |
| Maximum Power Dissipation | 550 mW at 50°C (Ambient temperature) |

| Pin | Name | Function |
|---|---|---|
| 8 | O1+ | Configurable digital output 1 – positive pin |
| 22 | O1- | Configurable digital output 1 – negative pin |
| 11 | O2+ | Configurable digital output 2 – positive pin |
| 12 | O2- | Configurable digital output 2 – negative pin |
| 16 | O3A | Configurable digital output 3 – polarity insensitive |
| 17 | O3B | Configurable digital output 3 – polarity insensitive |

The function of each output can be defined by the user (No Read, Right, Wrong, etc.). Refer to the Genius™ Help On-Line for further details.

The output signals are fully programmable being determined by the configured Activation/Deactivation events, Deactivation Timeout or a combination of the two.

By default, Output 1 is associated with the Complete Read event, which activates when all the selected codes are correctly decoded, and Output 2 is associated with the No Read event, which activates when the code signaled by the external trigger/PS is not decoded.

Output 3 can be assigned to the same events and it has the advantage of being polarity insensitive. By default it is not assigned to any event.

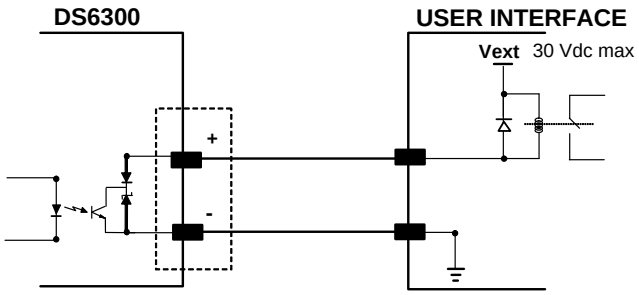


**Figure 67 – Output 1 and Output 2 Interface**

When the load is powered by an external power supply, the voltage must be less than 30 V.

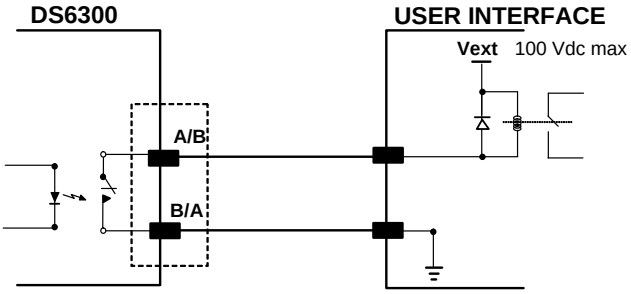


**Figure 68 – Output 3 Interface**

The command signals are filtered and generate a delay of about 50 µs for Output 1 and 2 and 1 ms for Output 3.

## 4.6 USER INTERFACE

**How To Build A Simple Interface Test Cable:**

The following wiring diagram shows a simple test cable including power, external (push-button) trigger and PC RS232 COM port connections.

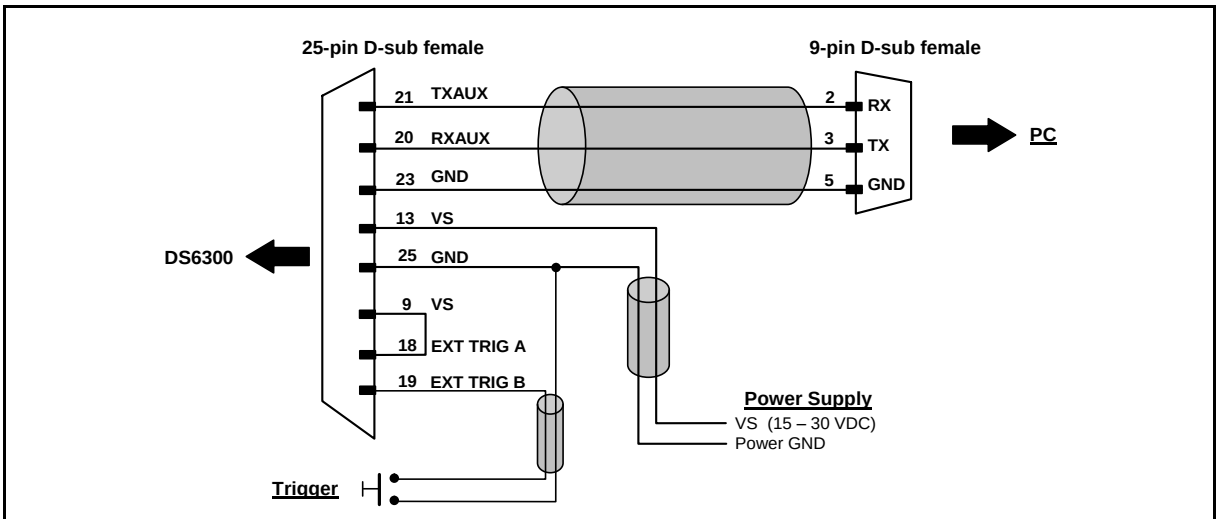


**Test Cable for DS6300**

# 5 LONWORKS CONNECTIONS

**CAUTION**

*Do not connect an RS232 port to the 9-pin Lonworks Connector. This may damage your Laptop PC.*

The local network used by DS6300 exploits a Lonworks standard communication system requiring only two wires (polarity insensitive) to enable a connection. The connector also provides a positive and a negative supplying wire. In this way, all the slave readers can be powered by the master through the Datalogic standard cables.

When working in applications requiring enhanced synchronization capabilities, the DS6300 master reader (output) transmits two system signals named Sys_I/O and Sys_Enc_I/O to the slave readers (input). For example, when working with applications requiring an encoder the signal is received by the master and directly transmitted to the slaves through the cable.
The internal circuits generating the system signals are externally supplied by means of the VS_I/O and REF_I/O pins and are isolated from the reader supply voltage.

The use of these system circuits is not required in all the operating modes. Anyway, for correct system functioning it is suggested to use Datalogic cables and accessories and follow the description of the typical layouts (see chapter 7 for details).

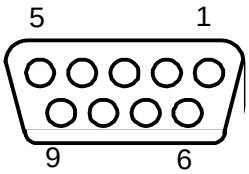

Female (all models)

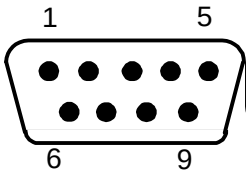

Male (Master/Slave model)

**Figure 69 - 9-pin Local Lonworks Connectors**

The following pinout is valid for both connectors.

| DS6300 9-pin Lonworks Connector Pinout | | |
|---|---|---|
| **Pin** | **Name** | **Function** |
| 1 | CHASSIS | Cable shield internally connected by capacitor to chassis |
| 9 | VS | supply voltage 15 to 30 vdc (positive pin) |
| 2 | GND | supply voltage (negative pin) |
| 6 | VS_I/O | Supply voltage of I/O circuit |
| 3 | Ref_I/O | Reference voltage of I/O circuit |
| 4 | SYS_ENC_I/O | System signal |
| 5 | SYS_I/O | System signal |
| 7 | LON A | Lonworks line (polarity insensitive) |
| 8 | LON B | Lonworks line (polarity insensitive) |

## 5.1 NETWORK TERMINATION

When building a Lonworks system the network must be properly terminated by positioning the BT-6000 Lonworks terminator in the DS6300 master reader and in the last DS6300 slave reader.

Each side of the terminator provides a different connector; thus, it can be inserted either into the Lonworks 9-pin male connector of the master reader or in the Lonworks 9-pin female connector of the last slave reader:

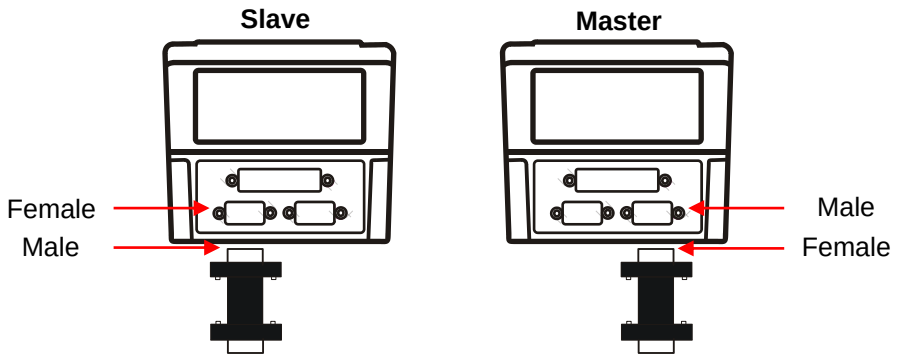


**Figure 70 - BT-6000 Network Terminator**

**NOTE**

*For Fieldbus models (Ethernet, DeviceNet, or Profibus), no terminator must be inserted in the reader, since it is internally integrated.*

## 5.2 LONWORKS INTERFACE

The Lonworks network is used for both input and output connection to build a multi-sided or omni-station system connecting several readers.

The DS6300 master usually employs the 9-pin female connector for output connection to the first slave, while the 9-pin male connector is terminated by inserting the BT-6000 terminator (see Figure 70 for details). If creating a T-network configuration, it is necessary to use both connectors to create the double branch line of slave readers.

Both connectors are always employed when connecting together the slave readers. In particular, the 9-pin female connector is used for output connection and the male one for input connection. The female connector in the last slave reader is terminated by the BT-6000 to close the system network.

The following diagram represents the connection between a DS6300 working as master and a DS6300 working as a slave reader.

The cable shield for LON A/B is connected to pin1 - CHASSIS.

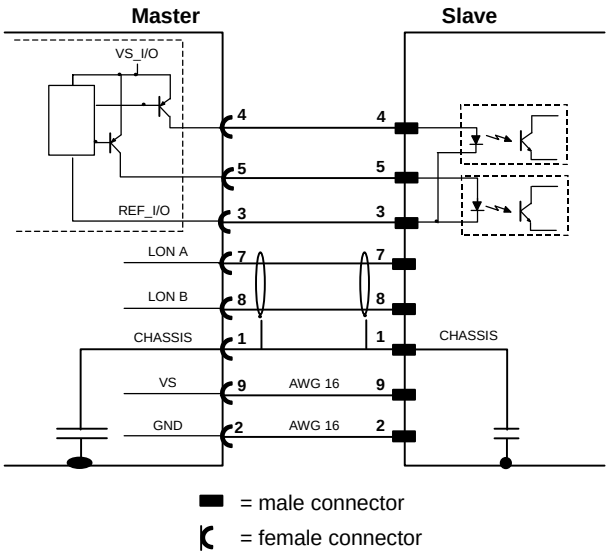


**Figure 71 – DS6300 Master/Slave Lonworks Connection**

**CAUTION**

*The maximum current to be propagated to the Slave readers through the Master is 2 A. For this reason, it is suggested to use a 24 Vdc power supply capable of supplying up to three readers (Master + 2 Slaves).*

The following diagrams represent different network terminations using the BT-6000 Lonworks terminator. In Figure 73 the BT-6000 terminator is indicated by the T element, while the figure below shows its electrical circuit in details:

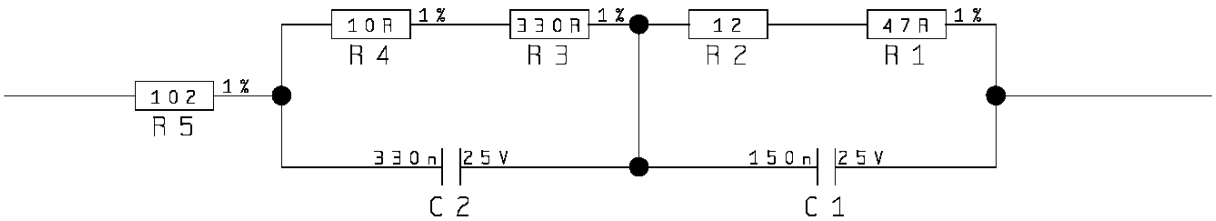


**Figure 72 – BT-6000 Electrical Circuit**

The diagram below represents the termination of a DS6300 (Master/Slave model) working as master by means of the BT-6000.

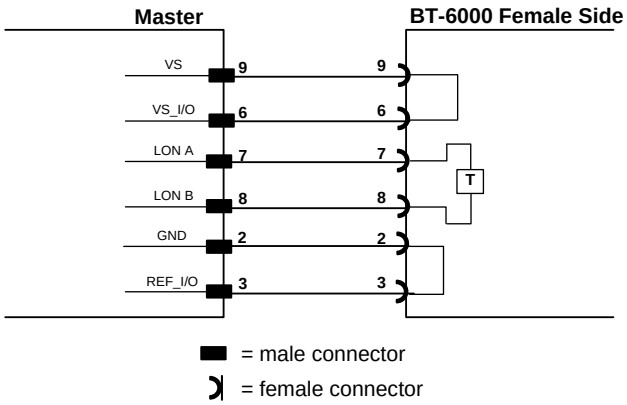


**Figure 73 – DS6300 Master Termination**

The diagram below represents the termination of a DS6300 (Master/Slave model) working as slave by means of the BT-6000 terminator.

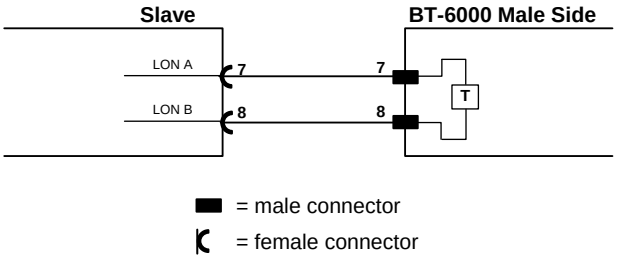


**Figure 74 – DS6300 Slave Termination**

The diagram below represents the connection between a DS6300 Fieldbus model, which always works as master, and a Master/Slave model working as a slave reader.

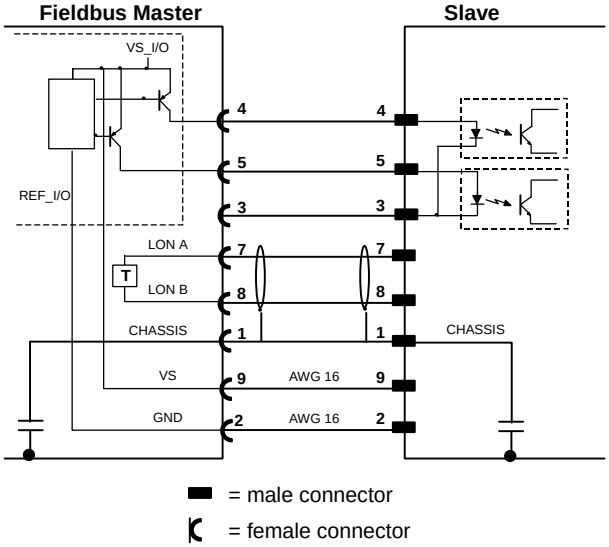


**Figure 75 – DS6300 Fieldbus Master to Slave Lonworks Connection**

The Fieldbus master is internally terminated.

# 6 FIELDBUS CONNECTIONS

## 6.1 ETHERNET INTERFACE

This connector is only available for DS6300 Ethernet models and allows the Ethernet connection between the host and the reader.

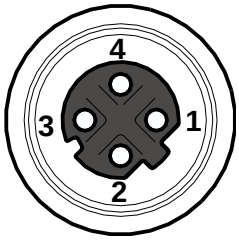


**Figure 76 –DS6300 M12 4-pin D-Coded Female Ethernet Connector**

This interface and the connector pinout (see the following table) are IEEE 802.3 10 BaseT and IEEE 802.3u 100 Base Tx compliant.

| M12 4-pin D-coded Female Pinout | | |
|---|---|---|
| **Pin** | **Name** | **Function** |
| 1 | TX + | Transmitted data (+) |
| 2 | RX + | Received data (+) |
| 3 | TX - | Transmitted data (-) |
| 4 | RX - | Received data (-) |

In order to meet EMC requirements use Ethernet shielded cable.

The Ethernet interface can be used for TCP/IP communication with a remote or local host computer by connecting the scanner to either a LAN or directly to a host PC. There is no need to use a crossover adapter since scanner incorporates an auto-cross function.

The following is an example of a connection to a LAN using a **CAB-ETH-M0x** straight through cable:

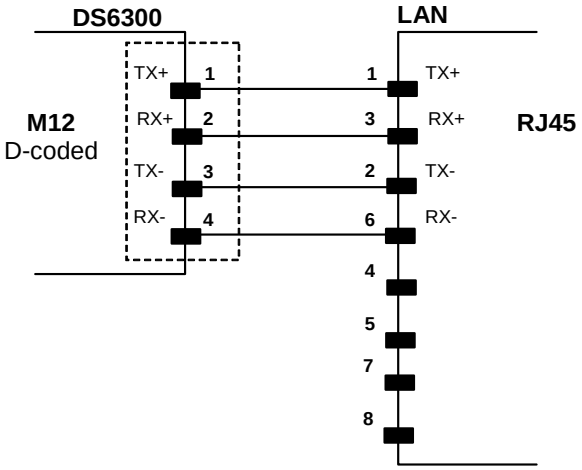


**Figure 77 – Straight Through Cable**

For further details refer to the “Ethernet Service Guide” document provided as reference documentation.

## 6.2 ETHERNET INTERFACE (OLDER MODELS)

The RJ45 connector is only available for older DS6300 Ethernet models and allows the Ethernet connection between the host and the reader.

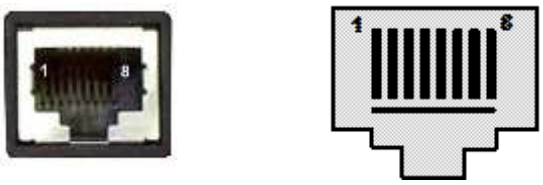


**Figure 78 – DS6300 RJ45 Female Modular Connector**

This interface and the connector pinout (see the following table) are IEEE 802.3 10 BaseT and IEEE 802.3u 100 Base Tx compliant.

| RJ45 Modular Jack Pinout | | |
|---|---|---|
| **Pin** | **Name** | **Function** |
| 1 | TX + | Transmitted data (+) |
| 2 | TX - | Transmitted data (-) |
| 3 | RX + | Received data (+) |
| 6 | RX - | Received data (-) |
| 4, 5, 7, 8 | N.C. | Not connected |

In order to meet EMC requirements:

- use Ethernet shielded cable
- connect the Ethernet interface cable shield to the plant earth ground

**NOTE**

*The cable shield must be connected to the chassis of both connectors.*

*A ferrite (type Stewart 28A2029-0A0) may also be applied on the scanner side of the Ethernet cable to reduce electrical noise.*

The Ethernet interface can be used for TCP/IP communication with a remote or local host computer by connecting the scanner to a LAN. It can also be connected directly to a host PC.

The following is an example of a connection to a LAN through a Hub using a straight through cable:

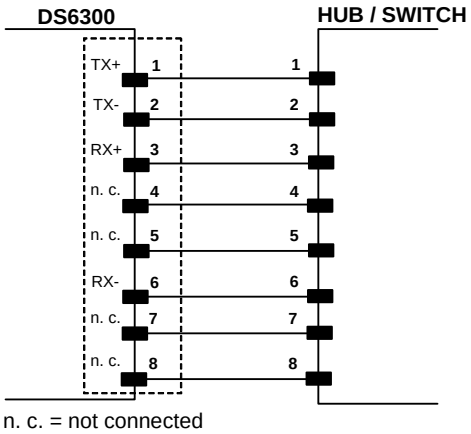


**Figure 79 – Straight Through Cable**

The following is an example of direct connection to a PC using an inverted cable:

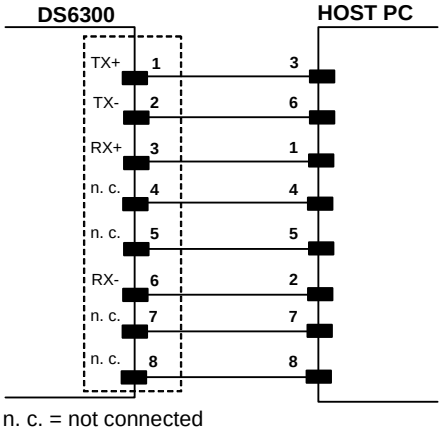


**Figure 80 – Inverted or Cross Cable**

For further details refer to the “Ethernet Service Guide” document provided as reference documentation.

## 6.3 DEVICENET INTERFACE

**NOTE**

*When using DeviceNet, the Main serial interface is disabled and must not be physically connected.*

The 5-pin male connector is only available in the DS6300 DeviceNet model and allows connection between the host and the reader:

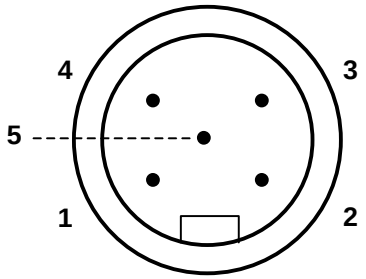


**Figure 81 - DeviceNet 5-pin Male Connector**

| DS6300 5-pin DeviceNet connector pinout | | |
|---|---|---|
| **Pin** | **Name** | **Function** |
| 2 | V + | Supply voltage – positive pin |
| 5 | CAN_L | CAN bus data line – L |
| 1 | SHIELD | Shield |
| 4 | CAN_H | CAN bus data line – H |
| 3 | V - | Supply voltage – negative pin |

**NOTE**

*The power supplied on pin V+ and V- is used <u>only</u> to propagate power to the section of the DeviceNet board directly connected to the Bus. It is completely isolated from the DS6300 power which must be supplied on pin 9, 13 and pin 23, 25 of the 26-pin Main/Aux connector.*

## 6.4 PROFIBUS INTERFACE

The 9-pin Profibus female connector (white) is only available in the DS6300 Profibus model and allows connection between the host and the reader:

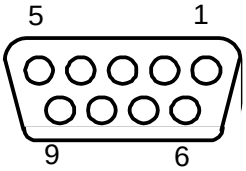


**Figure 82 - Profibus 9-pin Female Connector**

| DS6300 9-pin Profibus connector pinout | | |
|---|---|---|
| **Pin** | **Name** | **Function** |
| 1 | Shield* | Shield, Protective Ground resp. |
| 2 | Free | |
| 3 | B-LINE (RxD/TxD-P) | Received/Transmitted Data-P |
| 4 | CNTR-P** | Repeater Control Signal |
| 5 | DGND | Data Ground (M5V) |
| 6 | +5 V | Voltage Plus (P5V) |
| 7 | Free | |
| 8 | A-LINE (RxD/TxD-N) | Received/Transmitted Data |
| 9 | CNTR-N** | Repeater Control Signal |

* signal is optional

** signal is optional; RS485 level

The Profibus interface is used for communication with an Host and allows expanding the networking and remote diagnostic capabilities of the scanner.

For further details refer to the “Profibus_Fam6k.pdf” document provided as supplementary documentation.

# 7 TYPICAL LAYOUTS

DS6300 scanners are mainly designed to work together on a high performance Lonworks sub-network to create multi-sided and omnidirectional reading stations that can interface with Serial or Fieldbus Host networks. This chapter covers the most common Lonworks layouts.

DS6300 scanners can however, be connected in a variety of layouts depending on the number of scanners used and the required complexity of the reading station. Layouts range from single Stand Alone to complex alternative networks when Lonworks is not available for all readers (mixed reader networks). For alternative layouts see appendix A.

Several power supplies are available to power the reading stations.

Photoelectric sensors used as code presence sensors and optical encoders to signal conveyor speed are also available accessories.

The following typical layouts refer to the system hardware configurations, but they also require the correct setup of the software configuration parameters (see par. 8.2 for details).

The accessories and cables indicated in the following figures are Datalogic products. We suggest their use to guarantee the correct system functioning.

## 7.1 LOCAL LONWORKS NETWORK

A local Lonworks network allows logically connecting a DS6300 master reader with up to 31 DS6300 slaves. Actually, the maximum number of readers to be employed in the network depends on the system operating conditions; that is, adopted operating mode and amount of data stream.

When creating your network, always keep in mind the following guidelines:

- the Lonworks network logically supports a maximum number of 32 devices (master + slaves);
- it is recommended to adhere to the 8-in-16 rule (not more than 8 devices in any 16 meter bus segment (branch);
- for DS6300 scanners the total bus length may extend up to 130 m (426 ft);
- the maximum number of DS6300 readers supported also depends on the type of power propagation adopted by the system (see the specific power supply installation manual for details).

Typically the layouts can be divided into Synchronized (single P.S.) or Multidata (multi P.S.) networks. They can be small (up to 10 scanners) or large (more than 10 scanners).

Contact Datalogic Automation S.r.l., if your network requires a higher number of readers or in case the application throughput is very high.

For further information on Lonworks network cabling and connections see the “LonWorks® TPT Twisted Pair Transceiver Module User’s Guide”, available from the website: www.echelon.com.

**NOTE**

*For some DS6300 Lonworks Network layouts, power is propagated through the 9-pin scanner connectors. A specific jumper setting is required in CBXs to pass scanner power to the presence sensor, encoder, etc.*

### 7.1.1 Small Synchronized Network

When building a small local Lonworks network (less than 10 scanners), the DS6300 master reader must be connected to a local host computer or a CBX connection box by means of a cable connected to the 25/26-pin D-sub male connector.

The master reader connects to the first slave reader of the system through the local Lonworks 9-pin female connector. For Master/Slave models, the local Lonworks 9-pin male connector must be properly terminated by inserting the BT-6000 Lonworks terminator. Fieldbus models (Ethernet, DeviceNet, or Profibus), are internally terminated.

The slave readers are connected together through the local Lonworks connectors. Only the 9-pin female connector of the last slave reader must be terminated by the BT-6000 Lonworks terminator.

The presence sensor is connected and powered through the CBX by the scanner and is unique to the system. There is only a single reading phase and a single message from the master reader to the Local Host. The **On-Line** operating mode is used for this layout.

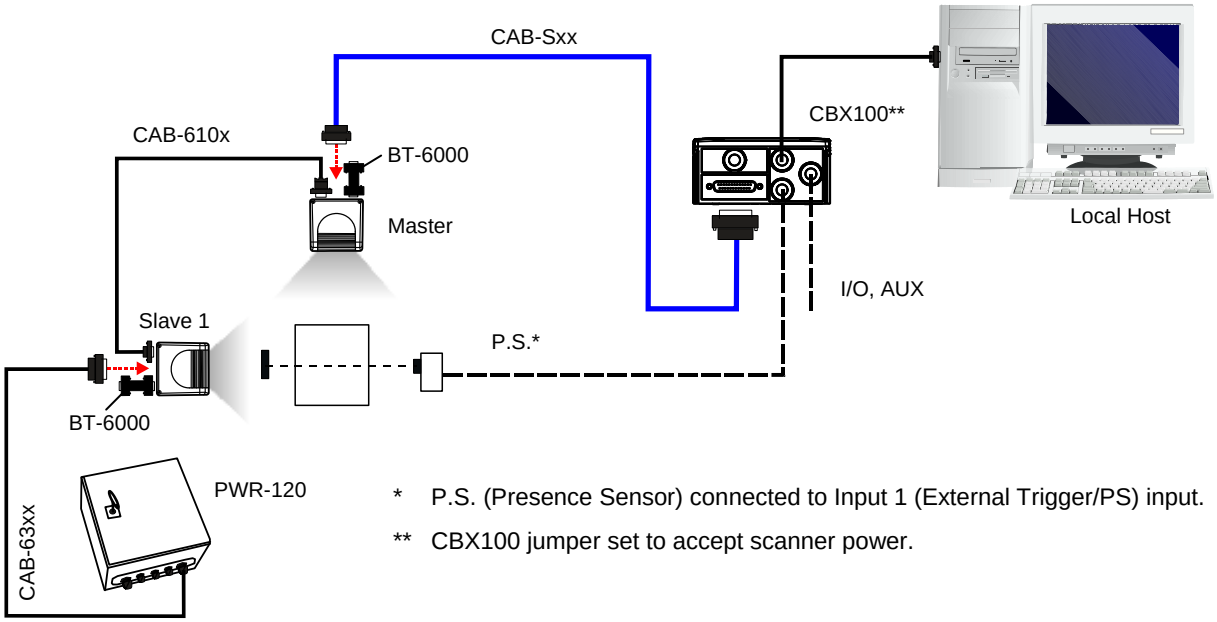


**Figure 83 – Small Synchronized Network with 2 Readers**

The following image shows a system consisting of five readers (mixed 8K and 6K) where the external signals (trigger, encoder, serial to host, etc.) are connected to the master through the CBX100.

**Note: In a mixed 8K and 6K family scanner network, only the 8K family scanner can be Master.**

The entire system is powered by the PWR-240 where:

- Power is distributed through two CAB-63xx cables to avoid excessive current draw.
- the master is connected to the CBX100 through the CAB-F0x, and provides power to the PS and Encoder.
- The Master DS8100A is terminated with the BTK-8102 and the last slave DS6300 is terminated with the BT-6000.

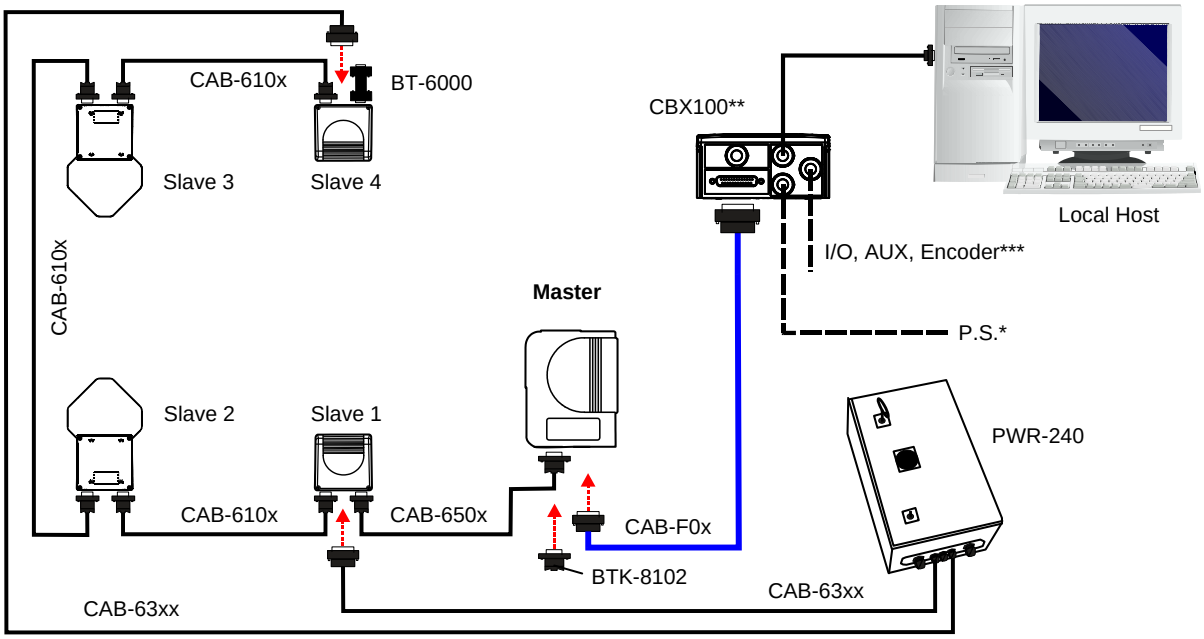


* P.S. (Presence Sensor) connected to Input 1 (External Trigger/PS) input.

** CBX100 jumper set to accept scanner power.

*** Encoder connected to Input 2 (Encoder) input.

**Figure 84 –Synchronized Network with DS8100A Master and 6K Family Slaves - Serial Host**

**NOTE**

*If a single power source is used, it is not necessary to separate groups of scanners with CAB-611x "no power" cables.*

### 7.1.2 Multidata Network

In this layout, one master and up to 7 DS6300 slave readers have their own P.S. and therefore multiple reading phases. Each P.S. is connected through a CBX100, which in turn is connected to its relative scanner through a CAB-Sxx cable.

Typically these systems are reading stations which are located relatively far away from each other and are therefore usually each powered separately. In this case, the Lonworks network must use CAB-611x "no power" cables.

The master sends all the individual messages collected from the Lonworks interface as well as its own to the Local Host through its CBX100.

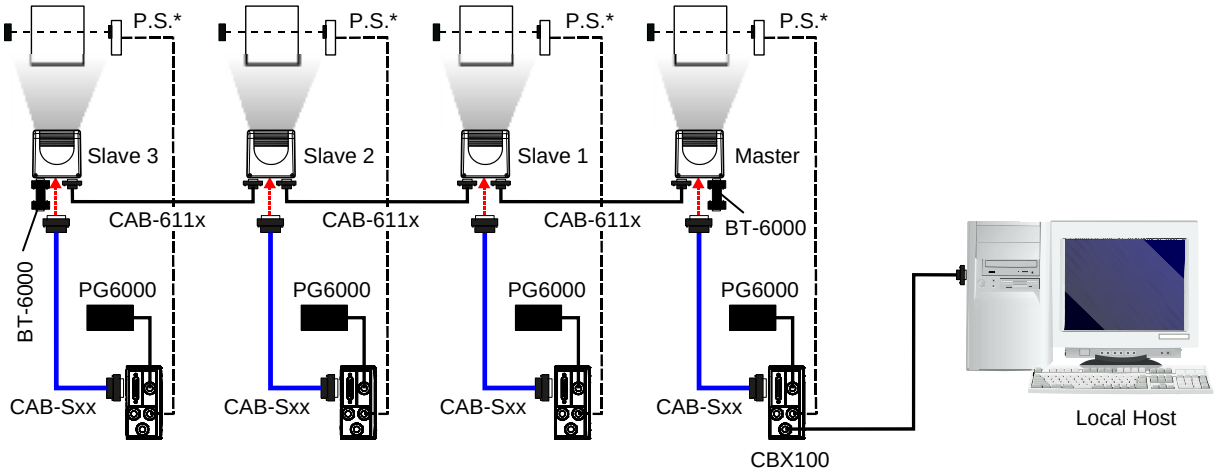


* Each P.S. (Presence Sensor) connected to Input 1 (External Trigger/PS) input.

**Figure 85 – Multidata Network**

### 7.1.3 Fieldbus Networks

The Fieldbus models (Ethernet, DeviceNet, or Profibus) offer connectivity without any converter or adapter needed.

The DS6300 Lonworks master communicates as a Fieldbus slave to a remote host (i.e. remote PC connected via Internet or PLC Fieldbus Master) by means of a cable connected to the Fieldbus connector provided. It can be activated by a signal generated by the remote Host or by a physical presence sensor.

The external signals (trigger, encoder) are connected to the master through the CBX100.

The entire system is powered by the PWR-240 where:

- Power is distributed through two CAB-63xx cables to avoid excessive current draw.
- The master is connected to the CBX100 through the CAB-F0x, and provides power to the PS and Encoder.
- Since the master DS6300 is a Fieldbus model, it is internally terminated. The last slave DS6300 is terminated with the BT-6000.
- The master connects directly to the remote host through its Fieldbus interface.

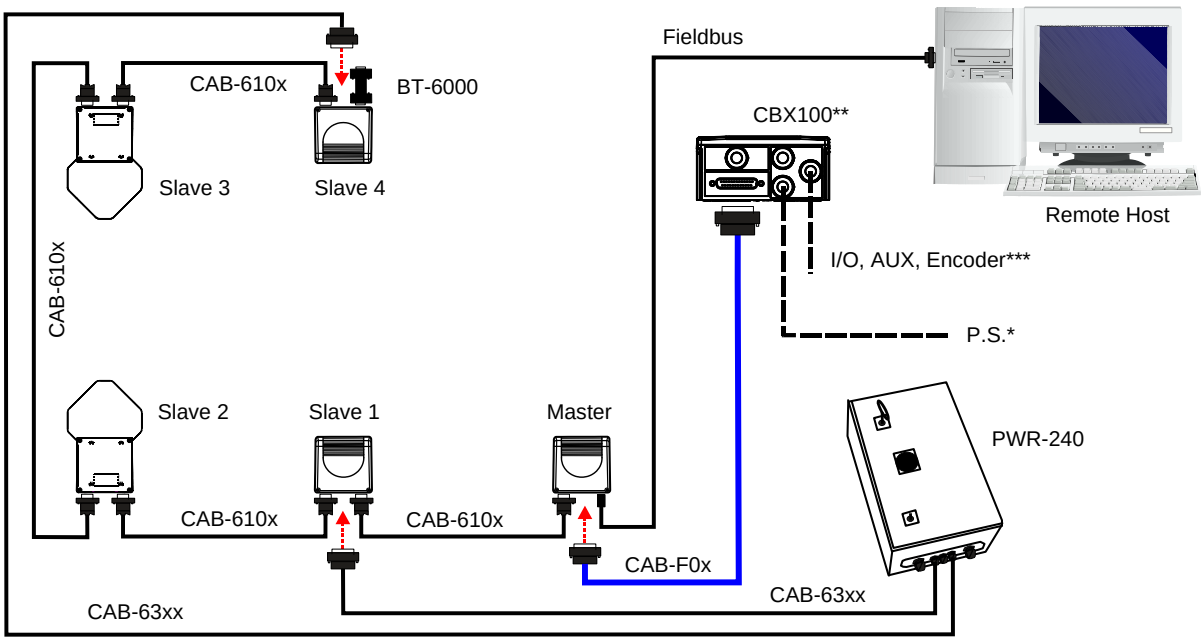


* P.S. (Presence Sensor) connected to Input 1 (External Trigger/PS) input.

** CBX100 jumper set to accept scanner power.

*** Encoder connected to Input 2 (Encoder) input.

**Figure 86 – Synchronized Network with DS6300 Master and 6K Family Slaves - Fieldbus Host**

**NOTE**

*To interface DS6300 scanners to other Host types (Fieldbus and non-Fieldbus), use the CBX800 Gateway with Host Interface Modules. The Master scanner in this case is a standard Master/Slave Serial model which requires the BT-6000 terminator.*

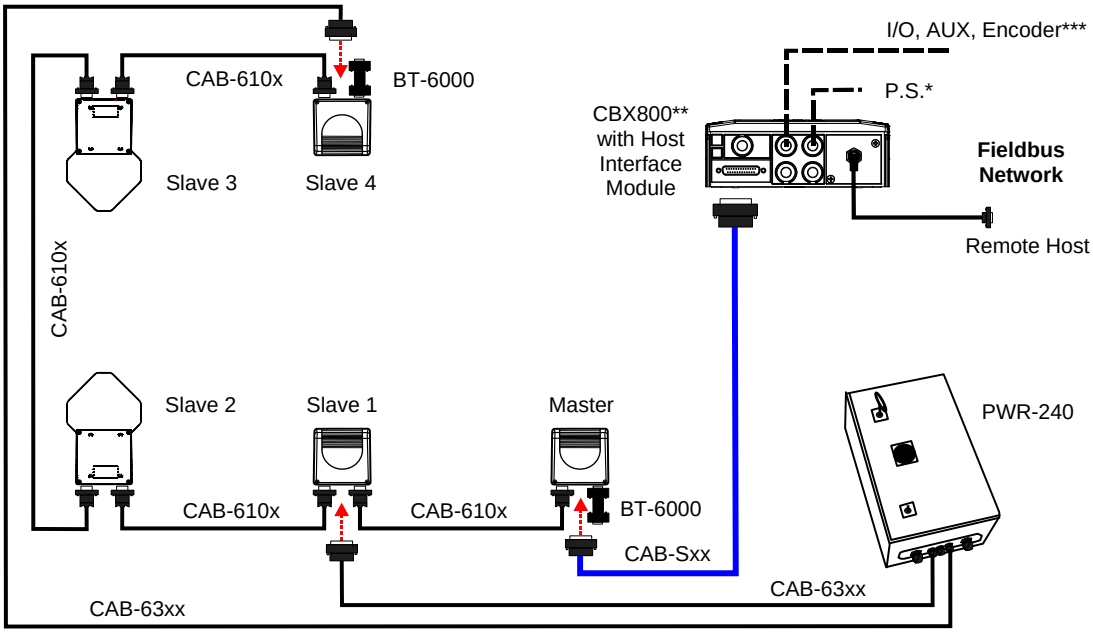


* P.S. (Presence Sensor) connected to Input 1 (External Trigger/PS) input.

** CBX800 jumper set to accept scanner power.

*** Encoder connected to Input 2 (Encoder) input.

**Figure 87 – CBX800 Gateway Fieldbus Synchronized Network**

The following Host Interface Module accessories are available for the CBX800 Gateway:

| NAME | **Description** | **Part Number** |
|---|---|---|
| BM200/210 | Ethernet TCP/IP Module STD/IP65 | 93ACC1851, 93ACC1852 |
| BM300/310 | Profibus Module STD/IP65 | 93ACC1810, 93ACC1811 |
| BM400 | DeviceNet Module IP65 | 93ACC1814 |
| BM500/510/520 | Ethernet/IP Module STD/IP65/IP54 | 93ACC1812, 93ACC1813, 93ACC1840 |
| BM600 | CANopen Module STD | 93ACC1815 |
| BM700/710 | Profinet Module STD/IP65 | 93ACC1816, 93ACC1886 |
| BM1100 | CC-Link Module STD | 93ACC1845 |
| BM1200/1210 | Modbus TCP STD/IP65 | 93ACC1848, 93ACC1849 |

# 8 SOFTWARE CONFIGURATION

## 8.1 GENIUS™ INSTALLATION

Genius™ is a new Datalogic scanner configuration tool providing several important advantages:

- Wizard approach for new users;
- Multi-language version;
- Defined configuration directly stored in the reader;
- Communication protocol independent from the physical interface allowing consideration of the reader as a remote object to be configured and monitored.

To install Genius™, proceed as follows:

1) Turn on the PC that will be used for configuration, running either Windows 98, 2000/NT, XP, Vista or 7;
2) Insert the Genius™ CD-ROM;
3) Wait for the CD to autorun and follow the installation procedure.

## 8.2 GUIDE TO RAPID CONFIGURATION

### 8.2.1 Wizard for Quick Reader Setup

After installing the Genius™ software program (see above), and running it, the following window appears asking the user to choose the desired configuration level:

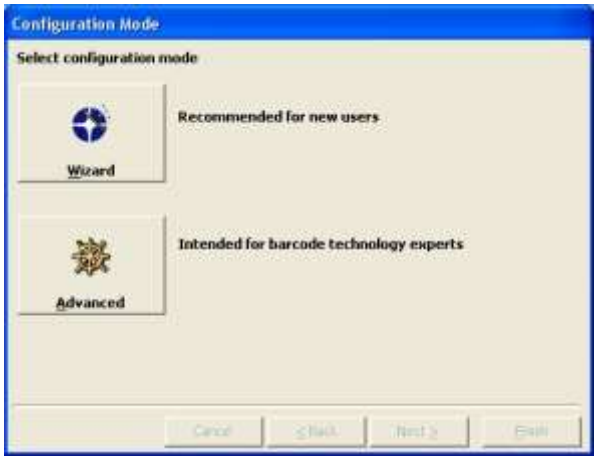


**Figure 88 - Genius™ Wizard Opening Window**

The Wizard option is advised for new users, since it shows a step-by-step scanner configuration. The parameters to be defined are the following:

- Barcode selection and definition;
- Operating mode selection and definition (see sub-paragraphs for further details);
- Digital Inputs/Outputs configuration;
- Hardware interface selection;
- Output data format configuration.

After defining the parameter values the following window appears allowing to complete the reader configuration as follows:

- Saving the configuration to disk;
- Switching to Advanced mode;
- Sending the configuration to the scanner.

**Figure 89 - Genius™ Wizard Closing Window**

## Test Operating Mode

**NOTE**

*This operating mode is not available when DS6300 works as slave.*

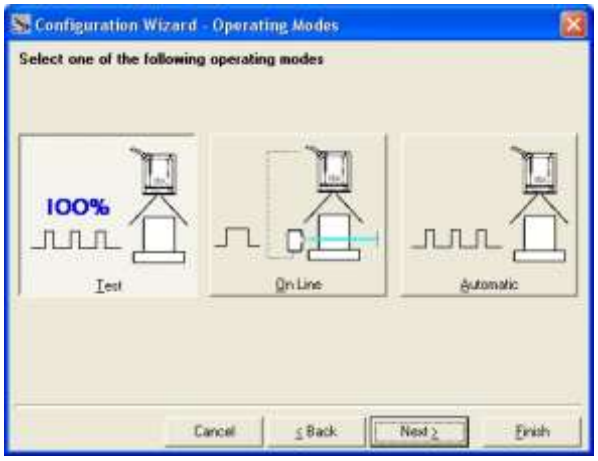


**Figure 90 - Test Mode Selection**

This operating mode causes the reader to be continuously activated allowing verification of its reading features and its reading position with respect to the barcode. For this reason, it is particularly advised during the installation phase of the reader.

After 100 scans, the values relative to an internal counter and the decoded code are displayed and transmitted on the serial interface. The counter reports the percentage of good reads of the label.

## On Line Operating Mode

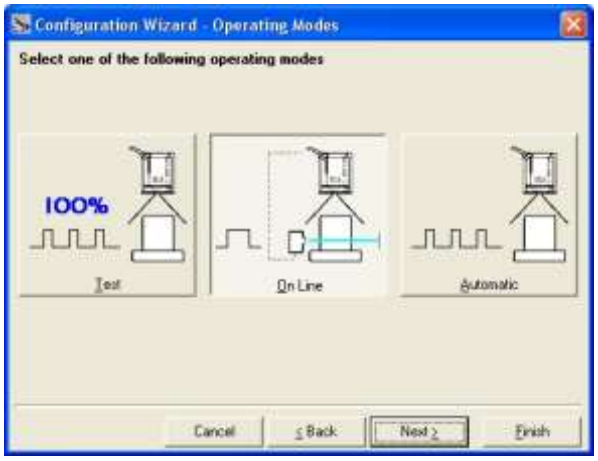


**Figure 91 - On Line Mode Selection**

This operating mode causes the reader to be connected to an external Presence Sensor using I1A and I1B (External Trigger/PS) inputs.

During the active phase of the presence sensor, the DS6300 reader tries to acquire and correctly decode the code.

In case the decoding phase is successful, the barcode characters are transmitted on the serial interface. Otherwise, a no read message is sent.

## Automatic Operating Mode

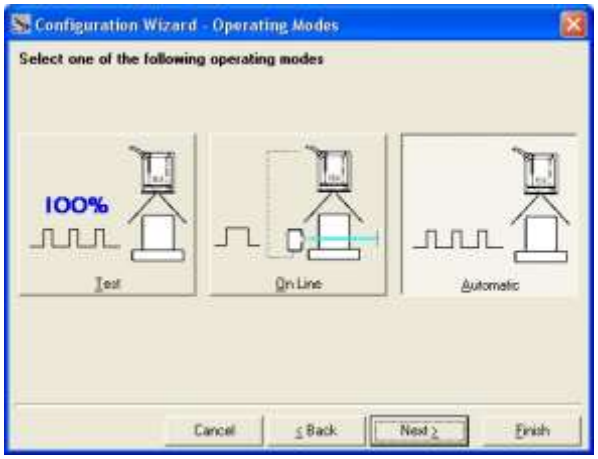


**Figure 92 - Automatic Mode Selection**

This operating mode does not require the connection to an external Presence Sensor.

When working in this mode the reader is continuously scanning. The reading phase is activated each time a barcode enters the reading zone. The reader stops reading after an N number of scans without a code. Barcode characters are transmitted on the serial interface. In case of a failed reading phase no message is sent to the host computer.

### 8.2.2 Genius™ Network Setup Through Master

Network Setup allows configuring your Local Lonworks Network through the Master using Genius™.

Three different procedures are available to define the number of network slave scanners, their label and address according to two main conditions:

| Condition | Available Procedure | Feature |
|---|---|---|
| Unknown Slave Addresses | Net-Autoset | automatically assigns random addresses to slave or Stand Alone scanners. |
| Known Slave Addresses | Network Wizard | customizes the network (slave label and address definition and physical identification of a specific slave within network), updates configuration to a file and makes it ready to be sent to the Master. |
| | Express Network Setup | automatically performs all the operations of the Network Wizard apart from the physical identification of a specific slave scanner. |

**NOTE**

*The Network Setup procedure as described requires Genius™ software version 1.06 or later. In addition, the Net-Autoset procedure requires scanner software version 6.40 or later.*

1. **The first operation** to perform is the configuration of your **scanner as "Master**" from the Local Device Network Settings item in the Device Menu, see figure below:

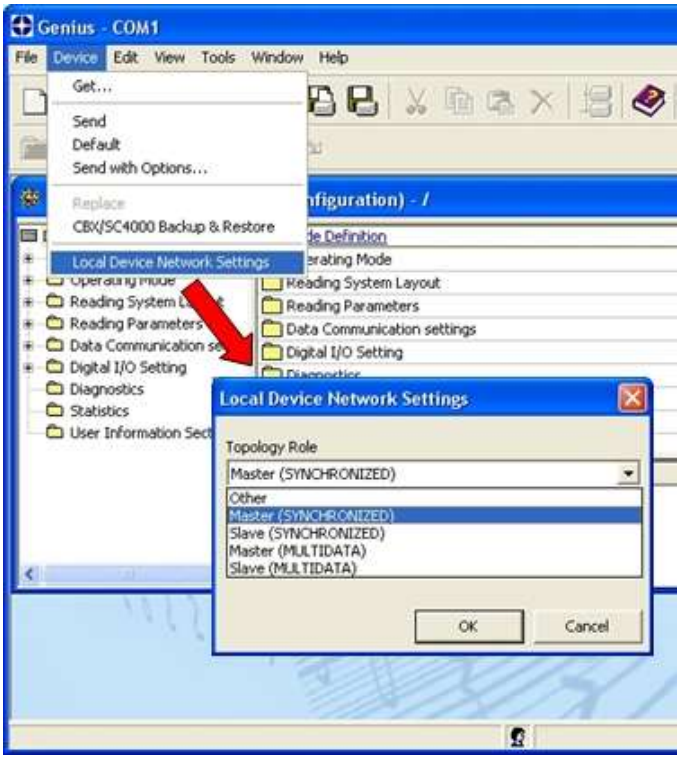


**Figure 93 – Local Device Network Settings**

The following dialog box appears asking whether to send the configuration to the Local Device or not:

**2.** Click the "Yes" button, then click on the icon available on the Toolbar to make the “Devices” area appear next to the Parameter Explorer window. By repeatedly clicking the icon this area will be displayed or hidden.

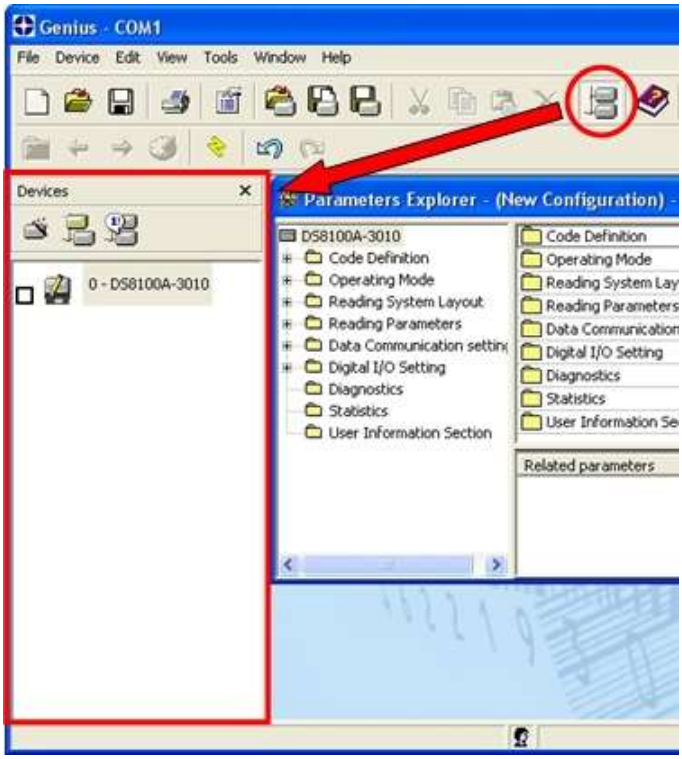


**Figure 94 – Cluster Configuration**

Each scanner of the cluster is indicated by the following graphical objects:

- check box allowing to select/deselect a specific scanner to perform the desired operations (i.e. program downloading);
- icon representing the scanner status;
- a label reporting information transmitted by the scanner when connected (the scanner address, generated errors, scanner description).

3. **Then, proceed with the network setup** by using one of the icons available on the Tool Bar according to the procedure to follow:

= Net-Autoset procedure

= Network Wizard procedure

= Express Network Setup procedure

## Net-Autoset

This procedure is to be used when all scanner addresses and labels are unknown (typically when configuring the network for the first time or whenever a network reconfiguration is required).

By clicking the icon or selecting the "Net_Autoset" option from the right-click menu, the Net-Autoset procedure is started allowing automatic assignment of random addresses to all slave or Stand Alone scanners connected within the network.
Once the procedure has been completed, it is possible to:

- define customized addresses and labels through the Network Wizard;
- display the scanner default labels through the Express Network Setup.

## Express Network Setup

Before performing this procedure, a Lonworks address must be assigned to each slave scanner. The most practical method is through the Net-Autoset procedure. See par. 8.2.3 for alternative address assignment methods.

Once all addresses have been assigned, the Express Network Setup is to be used when all scanner addresses and labels do not need to be modified.

By clicking on the icon or by choosing the related option from the right-click menu, the procedure is started which automatically performs the following operations:

- opening the wizard;
- polling the network to discover connected scanners;
- transferring all scanners found to the "Requested Devices" area of the wizard where your network customization is defined;
- saving the new network configuration;

Once the procedure has been completed, a dialog box will appear asking whether to send the configuration to the Master. Choose the “Yes” option to start this procedure.

## Network Wizard

Before performing this procedure, a Lonworks address must be assigned to each slave scanner. The most practical method is through the Net-Autoset procedure. See par. 8.2.3 for alternative address assignment methods.

Once all addresses have been assigned, the Network Wizard is to be used when one or more scanner addresses and labels need to be modified.

1. Click on the button to open the Network Wizard dialog box:

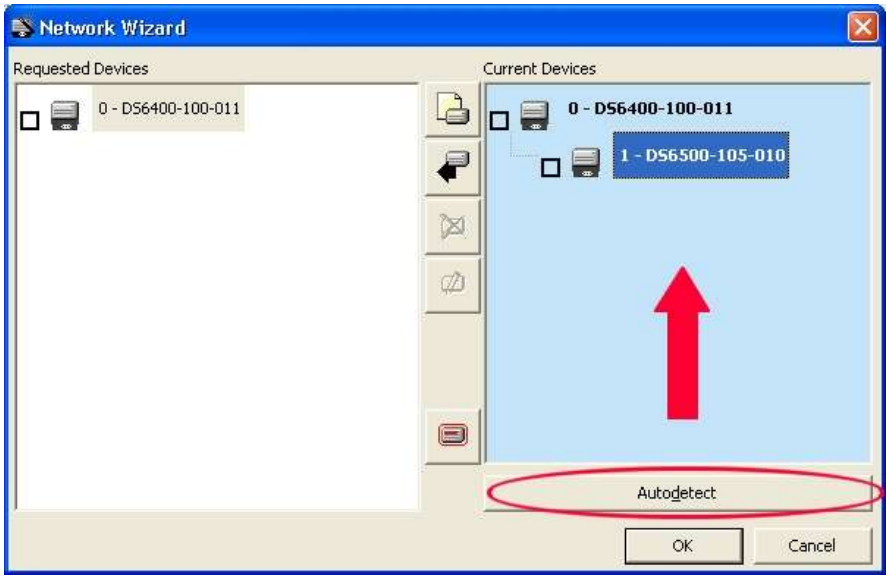


a. if the slave scanners have already been configured and wired to the network, click on the Autodetect button to start a polling procedure of the current network. All slave scanners found will be represented in the “Current Devices” area. Then, select the desired slave scanner from the “Current Devices” area and click on the icon (or drag and drop) to transfer it to the “Requested Devices” area where your network customization is defined. The following dialog box will appear allowing (if necessary) to change the slave address ("Available Device" field) and label ("Description" field):

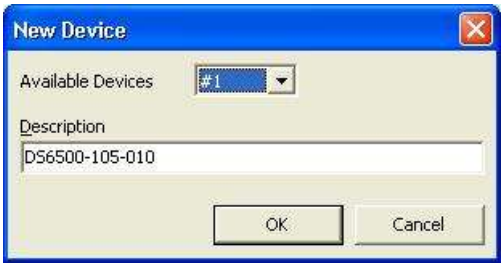


b. if the slave scanners have not been configured and wired to the network, click on the icon to add a new device defining its address and model. The added slave scanner will be displayed in the “Requested Devices” area. This option in any case requires that all slave scanners have their address set before the network can function.

2. If desired, select a slave scanner within the "Current Devices" area and click on the icon (or select the "Show Device" option from the right-click menu) to make the dialog box appear as follows:

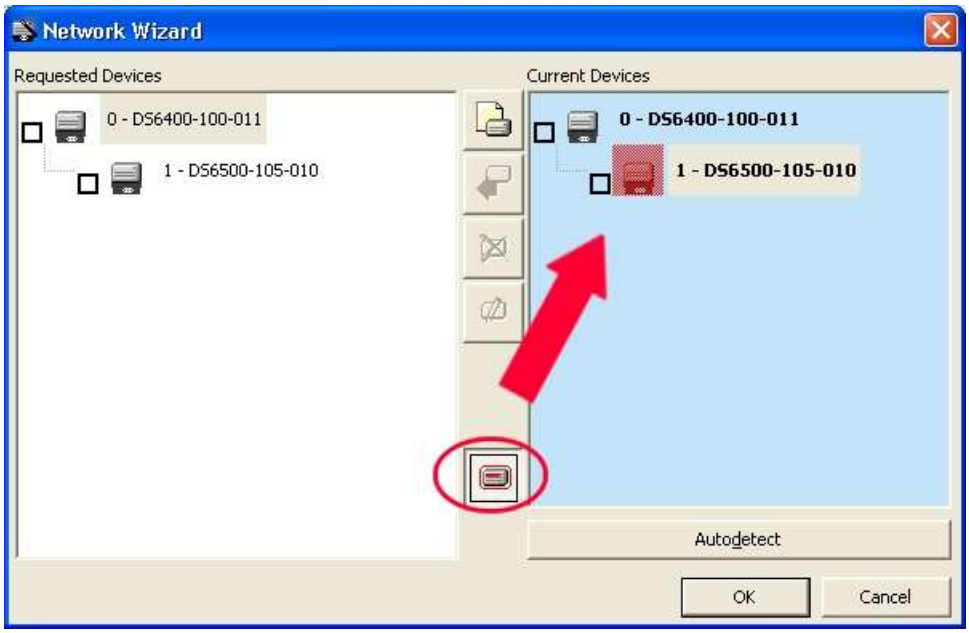


The "Show Device" option is particularly useful after the Net-Autoset procedure or whenever it is necessary to know which address is assigned to a specific slave scanner. Indeed, it activates the following signals which physically indicate the scanner corresponding to the one selected, in particular:

- in Network Wizard the icon corresponding to the selected slave scanner starts blinking red;
- in the Physical Network all slave scanner lasers turn off except the one of the selected scanner which turns on.

3. If desired, select the transferred/added slave scanner within the “Requested Devices” area and click on the icon to customize the scanner label and address.

4. Once your network has been customized, close the network wizard. Before closure, the program will show a dialog box asking whether to send the new configuration to the Master. Choose the “Yes” option to start this procedure.

### 8.2.3 Alternative Slave Address Assignment

As alternatives to Network Setup through the Master, each Slave scanner can be assigned an address through the following methods:

- address setting through the Local Device Network Settings item in the Device Menu with the slave scanner connected to Genius™

- manual address setting through slave scanner keyboard (see par. 1.6.1 for details)

## 8.3 ADVANCED GENIUS™ CONFIGURATION

The ADVANCED selection available when starting the Genius™ program is addressed to expert users being able to complete a detailed scanner configuration. By choosing this option it is possible either to start a new scanner configuration or to open and modify an old one. The desired parameters can be defined in the following window, similar to the MS Explorer:

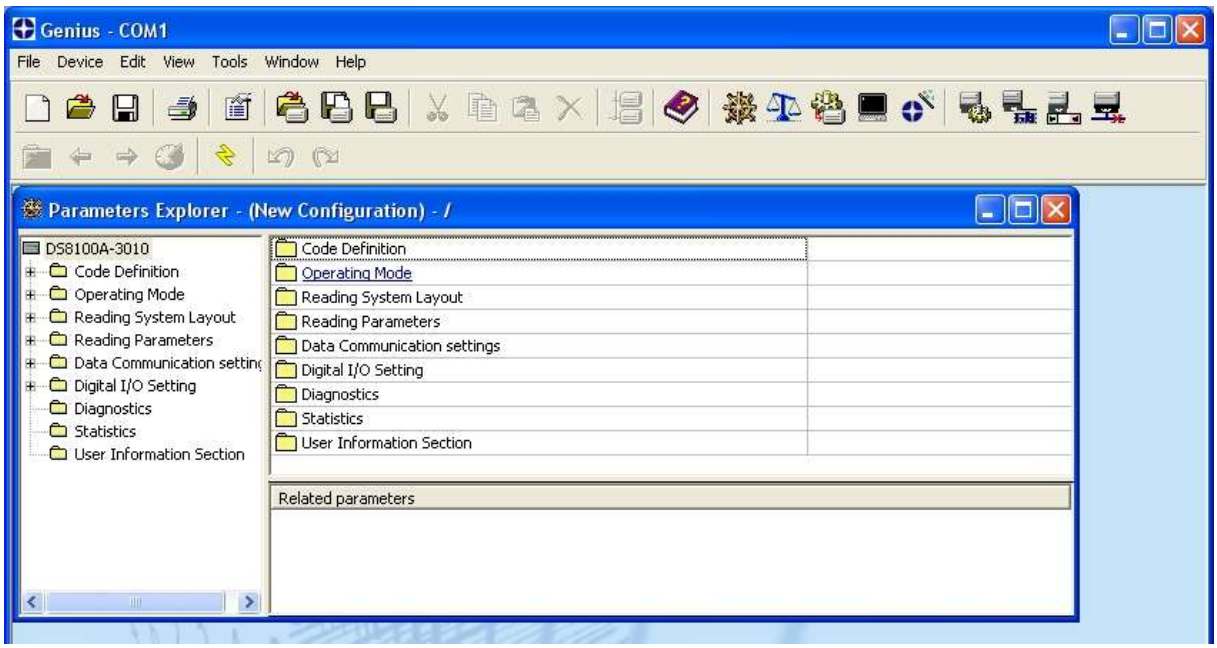


**Figure 95 - Genius™ Parameter Explorer Window**

The procedure for setting the scanner parameters is supported by a Help On-Line, which is displayed in an HTML browser. It can be selected from the Configuration Help option available in the Help menu. In addition, a context-sensitive help can be enabled by pressing the <F1> key after selecting the desired parameter.

### 8.3.1 Genius™ Shortcuts for Network Configuration

Once the Network Setup is structured in Genius and the Master is configured, there are a few shortcuts that Genius offers to quickly configure the slaves.

By right-clicking on a device in the "Devices" area a shortcut menu appears which allows you to:

- Copy the device configuration
- Paste a previously copied configuration
- Copy the Master device configuration parameters to all Slaves (only common parameters relative to Slave functioning, i.e. Code Definition, Diagnostics, etc.)
- Show Device to physically locate a scanner in the station

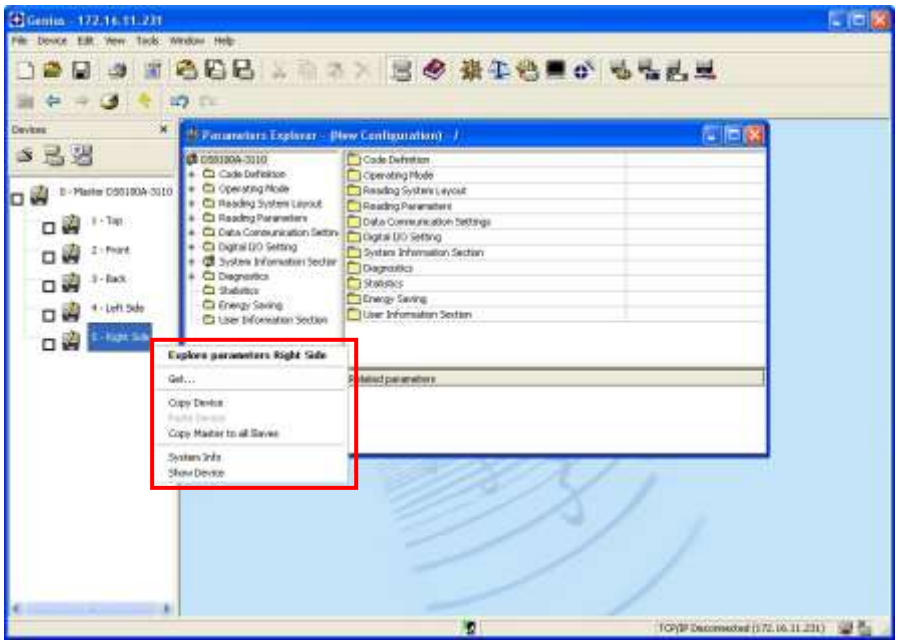


**These shortcuts are made only in Genius™ and require sending the configurations to the scanners to be saved.**

It is possible to Paste, Send or Load configurations simultaneously[1] to a selected number of devices by clicking the relative device check box and executing the desired command.

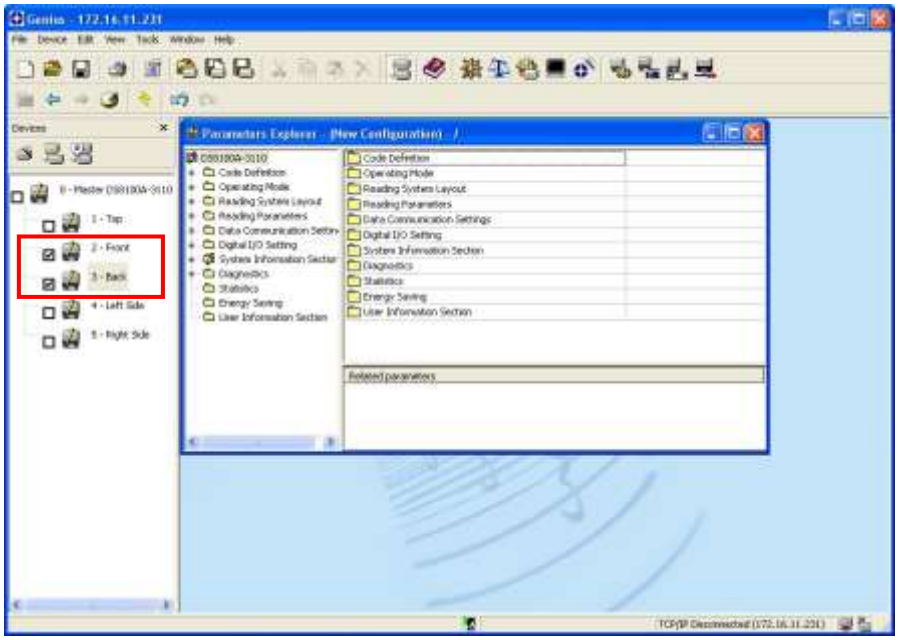

These same functions[2] can be selected from the Edit menu as well.

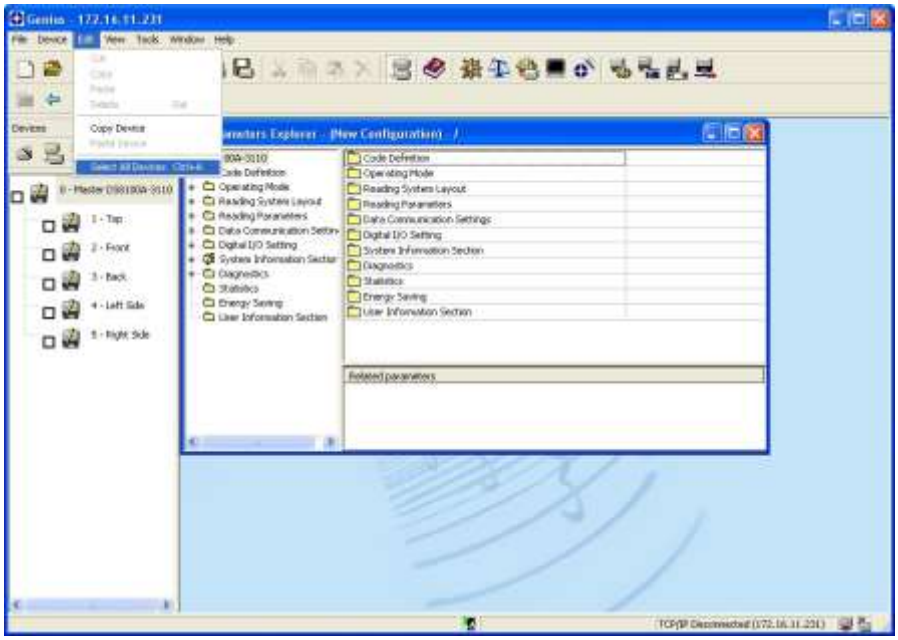

[1] Not for Master and Slaves simultaneously.

[2] Not for Master and Slaves simultaneously. If using the "Select All Devices" menu item, uncheck either the Master or all slaves.

## 8.4 PARAMETER DEFAULT VALUES

The following table contains the list of the factory default settings for the DS6300.
Genius™ also allows checking the parameter default values by selecting the "Compare parameters" option available in the Tools menu and comparing the current scanner configuration to the default one.

| Parameter | Default Setting |
|---|---|
| **Code Definition** | |
| Code Combination | Single Label |
| No read Message | Global No Read Message |
| No Read String | <CAN> |
| Multiple Read Filters | Disabled (unchecked) |
| Code Label Settings #1 | |
| Code Symbology | Interleaved 2 of 5 |
| Label Length | 8 |
| Min Code Position | 0 |
| Max Code Position | 255 |
| Check Digit | Disabled (unchecked) |
| Decoding Safety | 1 |
| Decoding Severity | 3 |
| Match String Rule | Match |
| Pattern Match String | Empty |
| Match Direction Rule | Disable |
| Code Label Settings #2 | |
| Code Symbology | Code 39 |
| Label Length | Variable |
| Minimum Label Length | 1 |
| Maximum Label Length | 60 |
| Min Code Position | 0 |
| Max Code Position | 255 |
| Check Digit | Disabled (unchecked) |
| Decoding Safety | 1 |
| Decoding Severity | 3 |
| Match String Rule | Match |
| Pattern Match String | Empty |
| Match Direction Rule | Disable |
| **Operating Modes** | |
| Operating Mode Selection | On Line |
| On Line Options | On Line 1 Input |
| Start Input Number | 1 |
| Start Input Active Level | Active Closed |
| Reading Phase Timeout | Disabled (unchecked) |
| Verifier | Disabled (unchecked) |
| **Reading System Layout** | |
| Device Assignment | Alone |
| Modify&Backup Lon Slave Configuration | Disabled (unchecked) |
| Enable A.S.R. | Disabled (unchecked) |

| Parameter | Default Setting |
|---|---|
| **Reading Parameters** | |
| Beam Shutter | Disabled |
| Overflow Start Ratio | 5 |
| Overflow Stop Ratio | 5 |
| Reading Mode | Reconstruction |
| Reading Condition | Standard |
| Reconstruction Parameters | |
| Enabled Stacked Code | Disabled (unchecked) |
| Extended | |
| Min Match | 0 |
| Position Tolerance | 50 |
| Duration Tolerance | 50 |
| Min Start/Stop Number | 2 |
| Inter Char Gap | 8 |
| Addon Overflow Ratio | 2 |
| Scan Line Amplitude | |
| Amplitude Settings Enable | Disabled (unchecked) |
| **Data Communication Settings** | |
| Host Application Protocol Type | Standard |
| Data Format | |
| Header TX Start | With data |
| Termination After No Read Message | Enabled (checked) |
| Message Tx Selection | On Decoding |
| Format Type | Standard |
| Max Tx Delay After Phase Off | Disabled |
| Code Identifier | Disabled |
| Parameters | |
| Header String | <STX> |
| Code Position | Disabled (unchecked) |
| Code Direction Identifier Enable | Disabled (unchecked) |
| Termination String | <CR><LF> |
| Data Packet Separators | <CR><LF> |
| Code Field Length Setting | Variable Length |
| Main Serial Port | |
| Data Tx | Enabled (checked) |
| Heartbeat | Disable |
| Parameters | |
| Main Port Communication Mode | Standard |
| Main Port Electrical Interface | RS232 |
| Handshake | None |
| Baud Rate | 9600 |
| Parity | None |
| Data Bits | 8 |
| Stop Bits | 1 |

| Parameter | Default Setting |
|---|---|
| Parameters | |
| Auxiliary Serial Port | |
| Search for CBX BM100 at Device Startup | Enabled (checked) |
| Data Tx | Enabled (checked) |
| Heartbeat | Disable |
| Pass Through | Disabled (unchecked) |
| Parameters | |
| Baud Rate | 115200 |
| Parity | None |
| Data Bits | 8 |
| Stop Bits | 1 |
| **Digital I/O Setting** | |
| Digital Input Lines Setting | |
| Debouncing For Input 1, 3 and 4 | 5ms |
| Debouncing For Input 2 | 500 µs |
| Input 1 Active Level Overridden by Op. Mode | Active Closed |
| Input 2 Active Level Overridden by Op. Mode | Active Closed |
| Input 3 Active Level Overridden by Op. Mode | Active Closed |
| Input 4 Active Level Overridden by Op. Mode | Active Closed |
| Output 1 | |
| Line State | Normally Open |
| Activation Event | Complete Read |
| Alternative Activation Event | Wrong |
| Deactivation Event | Timeout |
| Alternative Deactivation Event | None |
| Deactivation Timeout (ms) | 50 |
| Output 2 | |
| Line State | Normally Open |
| Activation Event | No Read |
| Alternative Activation Event | Partial Read |
| Deactivation Event | Timeout |
| Alternative Deactivation Event | None |
| Deactivation Timeout (ms) | 50 |
| Output 3 | |
| Line State | Normally Open |
| Activation Event | None |
| Alternative Activation Event | None |
| Deactivation Event | None |
| Alternative Deactivation Event | None |

| Parameter | Default Setting |
|---|---|
| **Diagnostics** | |
| PackTrack Debug Message Tx | Disabled (unchecked) |
| Enable | Checked |
| Conveyor Info | Not Available |
| Refresh Time | 2 sec |
| **Statistics** | Enabled (checked) |
| **Energy Saving** | |
| Energy Saving Configuration | Disabled (unchecked) |
| **User Information Section** | |
| End User Name | Empty |
| Device Name | Empty |
| Line Name | Empty |

# 9 READING FEATURES

## 9.1 FOCUS ADJUSTMENT

The DS6300 provides a manual adjustment of the optics to optimize the reading performance by choosing the best focus between two extreme positions. The focus adjustment is continuous and not by step; thus, allowing an optimum adjustment around the selected position. The relative focus positions range from 0 to 100.

The adjustment can be simply made through an external screw placed on the back of the optic HEAD and protected by a cap (Figure 98). The screw may be rotated either clockwise or counterclockwise in order to move the scanner internal lenses. In particular, a clockwise rotation causes a farther focus from the scanner, while a counterclockwise rotation causes a nearer focus to the scanner.

An internal sensor tracks the exact laser beam focusing position allowing it to be shown on the reader display or through the Genius™ software program.

**WARNING**

*Do not stare at the laser beam output window during this operation to avoid hazardous visible laser light.*

Refer to the following instructions when adjusting the focus:

1) Remove the regulation screw protecting cap (see Figure 98) positioned on the back of the optic Head;

2) Press and hold both the ▲ (up arrow) and ▼ (down arrow) key for about 2 seconds to enter the Main menu;

3) Use the ▲ (up arrow) or ▼ (down arrow) key to select “Test Mode” item, then press the ENT (enter) key to confirm. The reader enters Test Mode;

4) Press the ENT (enter) key to toggle between the graphical (default) and numerical visualization of the focus position;

### Display Visualization

The first line of the display shows the read code and Good Read percentage. Possible suspending commas at the end of the code mean that the code is too long to be displayed.
The second line of the display indicates the value of the focus position according to the table below. The indications “Too Near” or “Too Far” are represented for values outside the focus range.

| | Graphical Visualization | Numerical Visualization |
|---|---|---|
| **A** | |---^----------| → where **^** indicates the focus position | **F**xxx → where xxx ranges from 000 to 100 |
| **B** | **N**----------| → where **N** indicates that the focus position is “Too Near” | TooNear |
| **C** | |----------**F** → where **F** indicates that the focus position is “Too Far” | **F**xxx* → where xxx is greater than 100 |

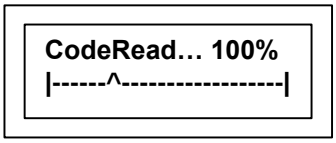


**Figure 96 – Graphical Visualization**

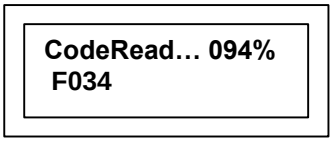


**Figure 97 – Normal Visualization**

5) Rotate the focus adjustment screw to reach the desired focus position. The display is refreshed with the new values;[3]

6) Press the ▲ (up arrow) key to exit the Test Mode;

7) Use the ▲ (up arrow) and ▼ (down arrow) key to select the “Exit” item, then press the ENT (enter) key to confirm. The scanner exits the Main Menu and returns to its current operating mode.

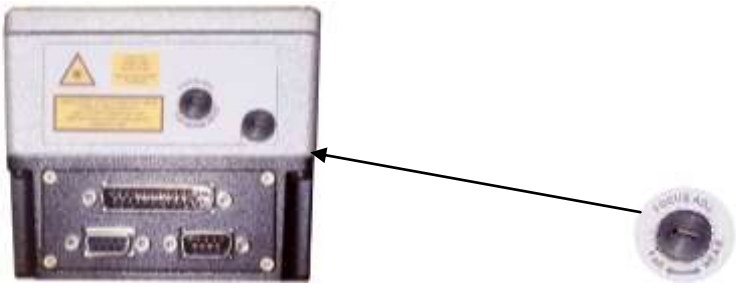

**Figure 98 - Focus Adjustment Screw**

**NOTE**

*The reader display shows the focus position only when the laser beam is activated.*

It is possible to visualize the focus position and the reading percentage on the terminal tool provided by the Genius™ configuration program (see Genius™ Help On-Line for details).

[3] To avoid breakage, do not use excessive force when rotating the focus adjustment screw.

## 9.2 ADVANCED CODE RECONSTRUCTION (ACR™ 4)

The traditional way of barcode reading could be called “Linear Reading”. In this case, the laser beam crosses the barcode symbol from its beginning to its end as shown in the following figure:

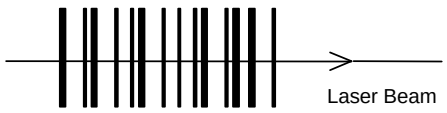


**Figure 99 – Linear Reading**

In Advanced Code Reconstruction mode it is no longer necessary for the laser beam to cross the label from the start to the end. With just a set of partial scans on the label (obtained using the motion of the label itself), the DS6300 is able to “reconstruct” the barcode. A typical set of partial scans is shown in the figure below:

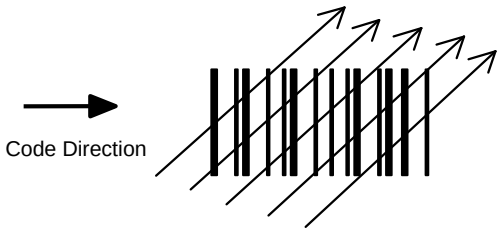


**Figure 100 – Partial Scans**

None of the partial scans contains the whole label. The decoder aligns each partial scan correctly and combines them in order to obtain the entire code.

This alignment is performed by calculating the time difference from one partial scan to another using a reference code element.

### 9.2.1 Tilt Angle for Advanced Code Reconstruction

The most important parameter in Advanced Code Reconstruction is the value of the maximum tilt angle ($\alpha$ maximum) under which the code reconstruction process is still possible.

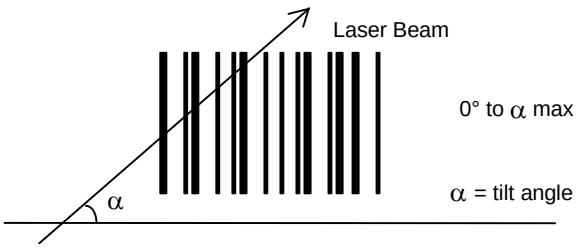


**Figure 101 – Tilt Angle**

The decoder will be able to read the label with a tilt angle between + α max and - α max as shown in the following figure:

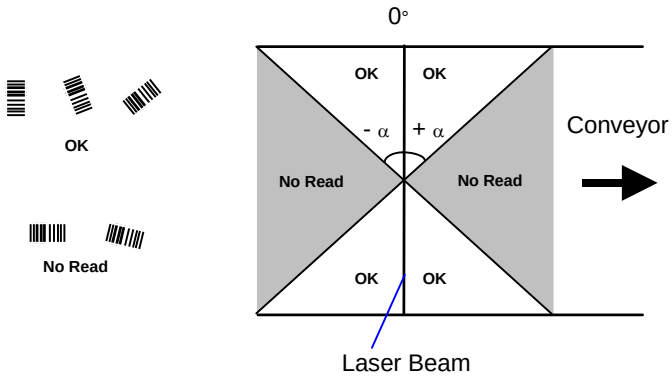


**Figure 102 – Reading Zones with α Max**

## 9.3 PERFORMANCE

The scan rate is 800 scans/sec.

Refer to the diagrams in par. 9.4 for further details on the reading features. These diagrams are taken on various resolution sample codes at a 25 °C ambient temperature depending on the conditions listed under each diagram.

If standard models do not satisfy specific requirements, contact your nearest Datalogic distributor, supplying code samples, to obtain complete information on the reading possibilities.

### 9.3.1 Reading Conditions

- ANSI Grade B minimum
- 800 scans/sec

The following tables describe the requirements for standard applications.

| | | Minimum Code Height for ACR Reading (mm) | | | | | | | | | | | |
|---|---|---|---|---|---|---|---|---|---|---|---|---|---|
| | | 45° | | | | | | 30° | | | | | |
| **Conveyor Speed (m/s)** | | **0.5** | **1** | **1.5** | **2** | **2.5** | **3** | **0.5** | **1** | **1.5** | **2** | **2.5** | **3** |
| **2/5 Interleaved Code Resolution (mm)** | **0.25** | 10 | 12 | 14 | 16 | 18 | 20 | 7 | 9 | 10 | 12 | 13 | 15 |
| | **0.30** | 12 | 14 | 15 | 17 | 19 | 21 | 8 | 9 | 11 | 12 | 14 | 15 |
| | **0.33** | 13 | 14 | 16 | 18 | 20 | 22 | 8 | 10 | 11 | 13 | 14 | 16 |
| | **0.38** | 14 | 16 | 18 | 19 | 21 | 23 | 9 | 11 | 12 | 14 | 15 | 17 |
| | **0.50** | 18 | 19 | 21 | 23 | 25 | 26 | 11 | 12 | 14 | 15 | 17 | 18 |
| | **0.72** | 24 | 25 | 27 | 28 | 30 | 32 | 15 | 16 | 17 | 19 | 20 | 22 |
| | **1.00** | 33 | 34 | 35 | 36 | 38 | 40 | 20 | 21 | 22 | 23 | 25 | 26 |

Ratio 3:1

**Table 1**

| | | Minimum Code Height for ACR Reading (mm) | | | | | | | | | | | |
|---|---|---|---|---|---|---|---|---|---|---|---|---|---|
| | | 45° | | | | | | 30° | | | | | |
| Conveyor Speed (m/s) | | 0.5 | 1 | 1.5 | 2 | 2.5 | 3 | 0.5 | 1 | 1.5 | 2 | 2.5 | 3 |
| Code 39 Code Resolution (mm) | 0.25 | 9 | 10 | 12 | 14 | 16 | 17 | 6 | 7 | 9 | 10 | 12 | 13 |
| | 0.30 | 10 | 11 | 13 | 15 | 17 | 18 | 7 | 8 | 9 | 11 | 12 | 14 |
| | 0.33 | 11 | 12 | 13 | 15 | 17 | 19 | 7 | 8 | 10 | 11 | 13 | 14 |
| | 0.38 | 12 | 13 | 14 | 16 | 18 | 20 | 8 | 9 | 10 | 12 | 13 | 15 |
| | 0.50 | 15 | 16 | 17 | 18 | 20 | 22 | 10 | 10 | 11 | 13 | 14 | 16 |
| | 0.72 | 20 | 21 | 22 | 23 | 24 | 26 | 13 | 13 | 14 | 15 | 17 | 18 |
| | 1.00 | 27 | 28 | 29 | 30 | 31 | 32 | 17 | 17 | 18 | 19 | 20 | 21 |

Ratio 3:1; Interdigit = Module Size

**Table 2**

| | | Minimum Code Height for ACR Reading (mm) | | | | | | | | | | | |
|---|---|---|---|---|---|---|---|---|---|---|---|---|---|
| | | 45° | | | | | | 30° | | | | | |
| Conveyor Speed (m/s) | | 0.5 | 1 | 1.5 | 2 | 2.5 | 3 | 0.5 | 1 | 1.5 | 2 | 2.5 | 3 |
| Code 128 – GS1-128 Code Resolution (mm) | 0.25 | 8 | 9 | 11 | 13 | 15 | 17 | 5 | 7 | 8 | 10 | 11 | 13 |
| | 0.30 | 8 | 10 | 12 | 14 | 16 | 18 | 6 | 7 | 9 | 10 | 12 | 13 |
| | 0.33 | 9 | 11 | 13 | 14 | 16 | 18 | 6 | 8 | 9 | 11 | 12 | 14 |
| | 0.38 | 10 | 11 | 13 | 15 | 17 | 19 | 7 | 8 | 10 | 11 | 13 | 14 |
| | 0.50 | 12 | 13 | 15 | 17 | 19 | 21 | 8 | 9 | 11 | 12 | 14 | 15 |
| | 0.72 | 16 | 17 | 19 | 21 | 22 | 24 | 10 | 11 | 13 | 14 | 16 | 17 |
| | 1.00 | 22 | 23 | 24 | 25 | 27 | 29 | 13 | 14 | 15 | 17 | 18 | 20 |

**Table 3**

| | | Minimum Code Height for ACR Reading (mm) | | | | | | | | | | | |
|---|---|---|---|---|---|---|---|---|---|---|---|---|---|
| | | 45° | | | | | | 30° | | | | | |
| Conveyor Speed (m/s) | | 0.5 | 1 | 1.5 | 2 | 2.5 | 3 | 0.5 | 1 | 1.5 | 2 | 2.5 | 3 |
| Codabar Code Resolution (mm) | 0.25 | 8 | 9 | 11 | 13 | 15 | 17 | 5 | 7 | 8 | 10 | 11 | 13 |
| | 0.30 | 9 | 10 | 12 | 14 | 16 | 18 | 6 | 7 | 9 | 10 | 12 | 13 |
| | 0.33 | 9 | 11 | 13 | 14 | 16 | 18 | 6 | 8 | 9 | 11 | 12 | 14 |
| | 0.38 | 10 | 11 | 13 | 15 | 17 | 19 | 7 | 8 | 10 | 11 | 13 | 14 |
| | 0.50 | 13 | 14 | 15 | 17 | 19 | 21 | 8 | 9 | 11 | 12 | 14 | 15 |
| | 0.72 | 17 | 18 | 19 | 21 | 22 | 24 | 11 | 12 | 13 | 14 | 16 | 17 |
| | 1.00 | 23 | 24 | 25 | 26 | 27 | 29 | 14 | 15 | 16 | 17 | 18 | 20 |

Ratio 3:1; Interdigit = Module Size

**Table 4**

| | | Minimum Code Height for ACR Reading (mm) | | | | | | | | | | | |
|---|---|---|---|---|---|---|---|---|---|---|---|---|---|
| | | 45° | | | | | | 30° | | | | | |
| Conveyor Speed (m/s) | | 0.5 | 1 | 1.5 | 2 | 2.5 | 3 | 0.5 | 1 | 1.5 | 2 | 2.5 | 3 |
| EAN 8-13, UPC-A Code Resolution (mm) | 0.25 | 7 | 9 | 10 | 12 | 14 | 16 | 5 | 6 | 8 | 9 | 11 | 12 |
| | 0.30 | 8 | 9 | 11 | 13 | 15 | 17 | 6 | 7 | 8 | 10 | 11 | 13 |
| | 0.33 | 9 | 10 | 11 | 13 | 15 | 17 | 6 | 7 | 9 | 10 | 12 | 13 |
| | 0.38 | 10 | 11 | 12 | 14 | 16 | 18 | 7 | 7 | 9 | 10 | 12 | 13 |
| | 0.50 | 12 | 13 | 14 | 15 | 17 | 19 | 8 | 9 | 10 | 11 | 13 | 14 |
| | 0.72 | 16 | 17 | 18 | 19 | 20 | 22 | 10 | 11 | 12 | 13 | 14 | 16 |
| | 1.00 | 22 | 23 | 24 | 24 | 25 | 26 | 13 | 14 | 15 | 16 | 16 | 18 |

**Table 5**

## 9.4 READING DIAGRAMS

### 9.4.1 DS6300 Standard Model

**DS6300-100-0XX - Resolution: 0.20 mm/8 mils**

**CONDITIONS**

Code = Interleaved 2/5 or Code 39

PCS = 0.90

Pitch angle = 0°

Skew angle = 10° - 20°

Tilt angle = 0°

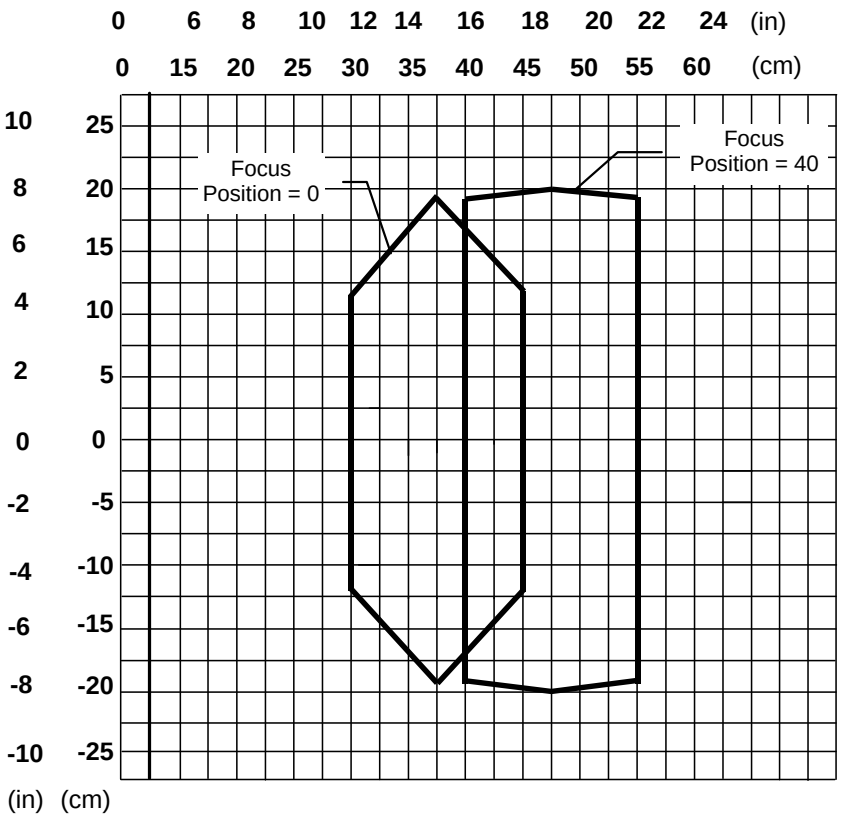


**Figure 103 – Standard Model 0.20 mm / 8 mils Reading Diagram**

**Note:** (0,0) is the center of the laser beam output window.

## DS6300-100-0XX - Resolution: 0.30 mm/12 mils

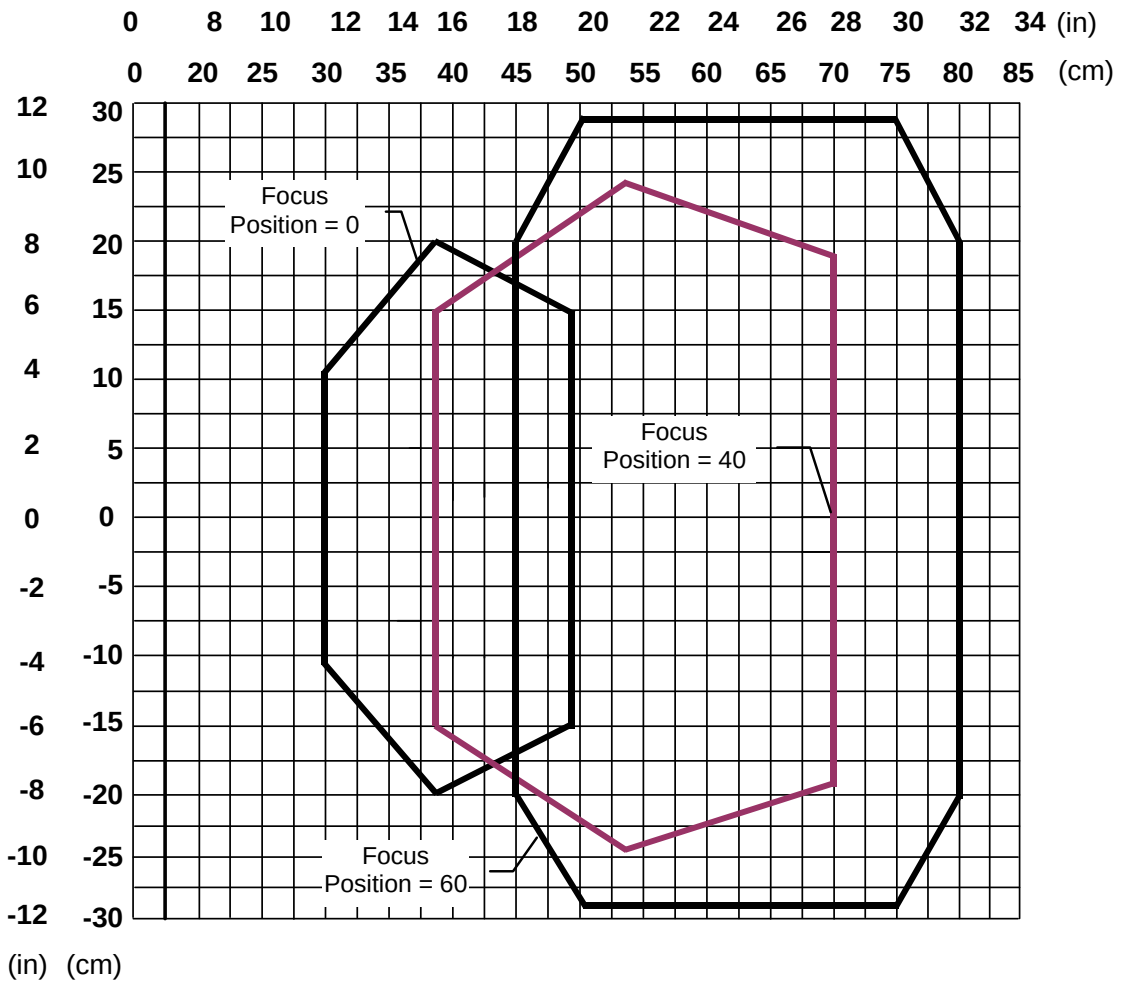


**Figure 104 - Standard Model 0.30 mm / 12 mils Reading Diagram**

**CONDITIONS**

Code = Interleaved 2/5 or Code 39
PCS = 0.90
Pitch angle = 0°
Skew angle = 10° - 20°
Tilt angle = 0°

**Note:** (0,0) is the center of the laser beam output window.

**DS6300-100-0XX - Resolution: 0.38 mm/15 mils**

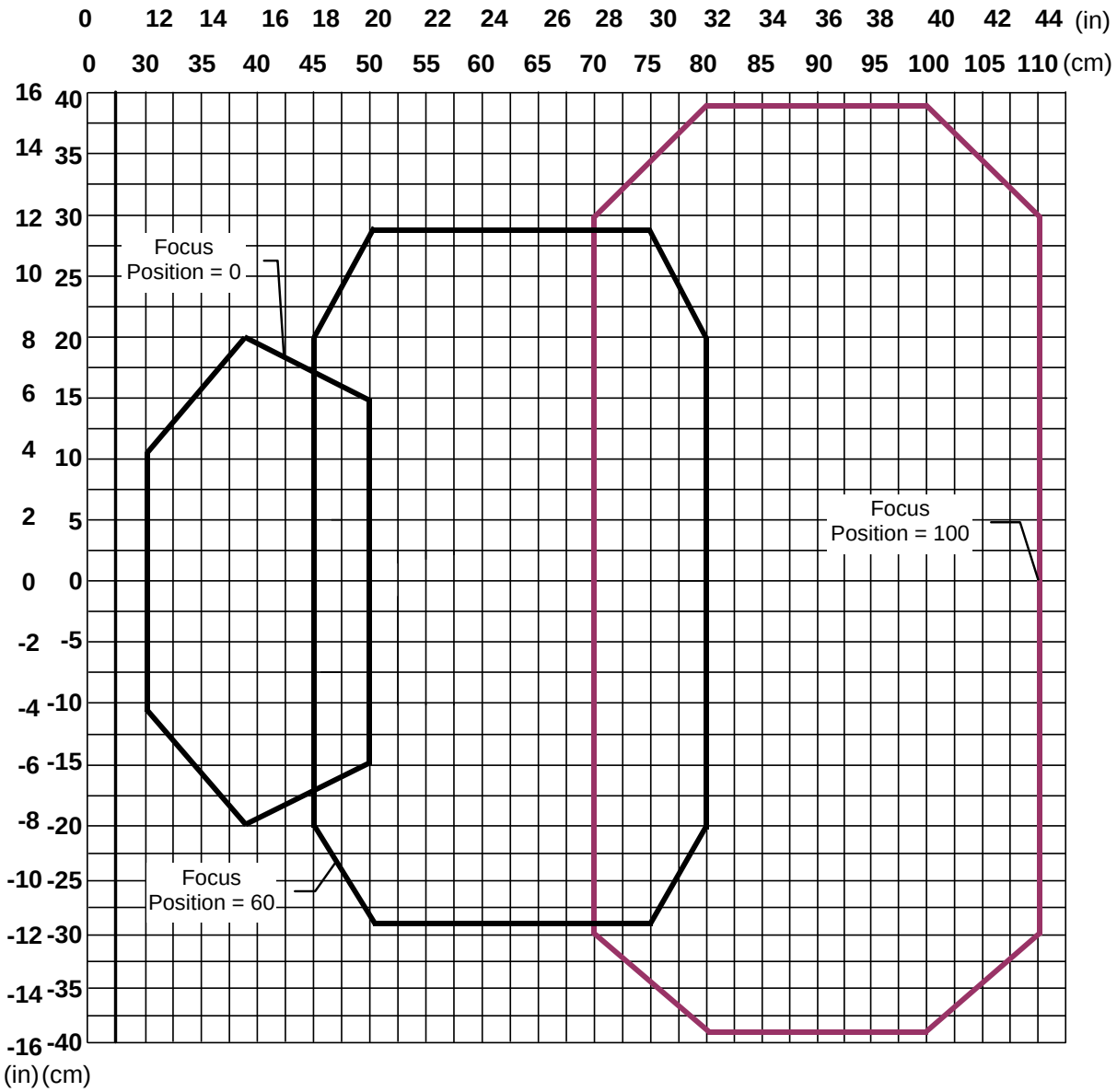


**Figure 105 - Standard Model 0.38 mm / 15 mils Reading Diagram**

**CONDITIONS**

Code = Interleaved 2/5 or Code 39

PCS = 0.90

Pitch angle = 0°

Skew angle = 10° - 20°

Tilt angle = 0°

**Note:** (0,0) is the center of the laser beam output window.

**DS6300-100-0XX - Resolution: 0.50 mm/20 mils**

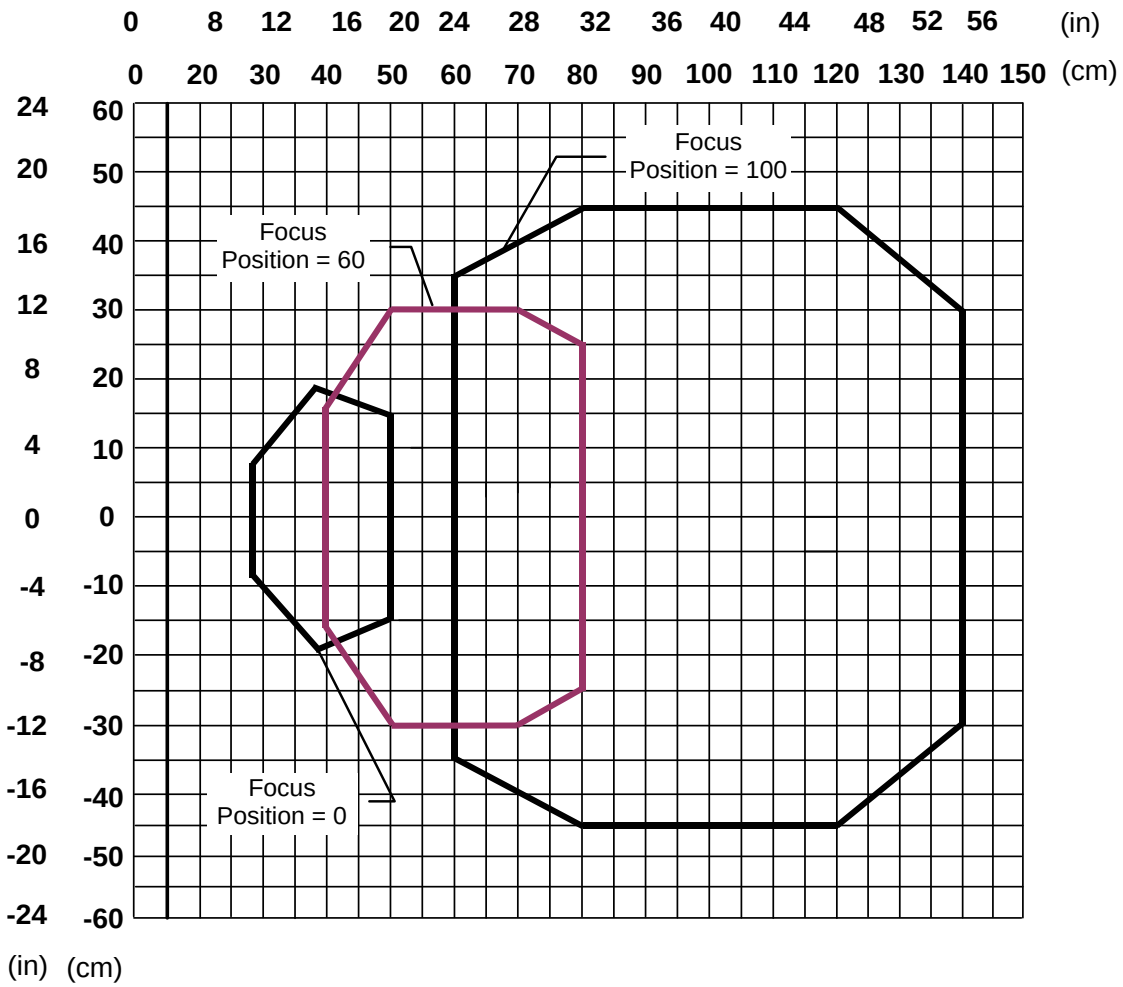


**Figure 106 - Standard Model 0.50 mm / 20 mils Reading Diagram**

**CONDITIONS**

Code = Interleaved 2/5 or Code 39
PCS = 0.90
Pitch angle = 0°
Skew angle = 10° - 20°
Tilt angle = 0°

**Note:** (0,0) is the center of the laser beam output window.

## 9.4.2 DS6300 Oscillating Mirror Model

**DS6300-105-0XX (oscillating mirror) - Resolution: 0.20 mm/8 mils**

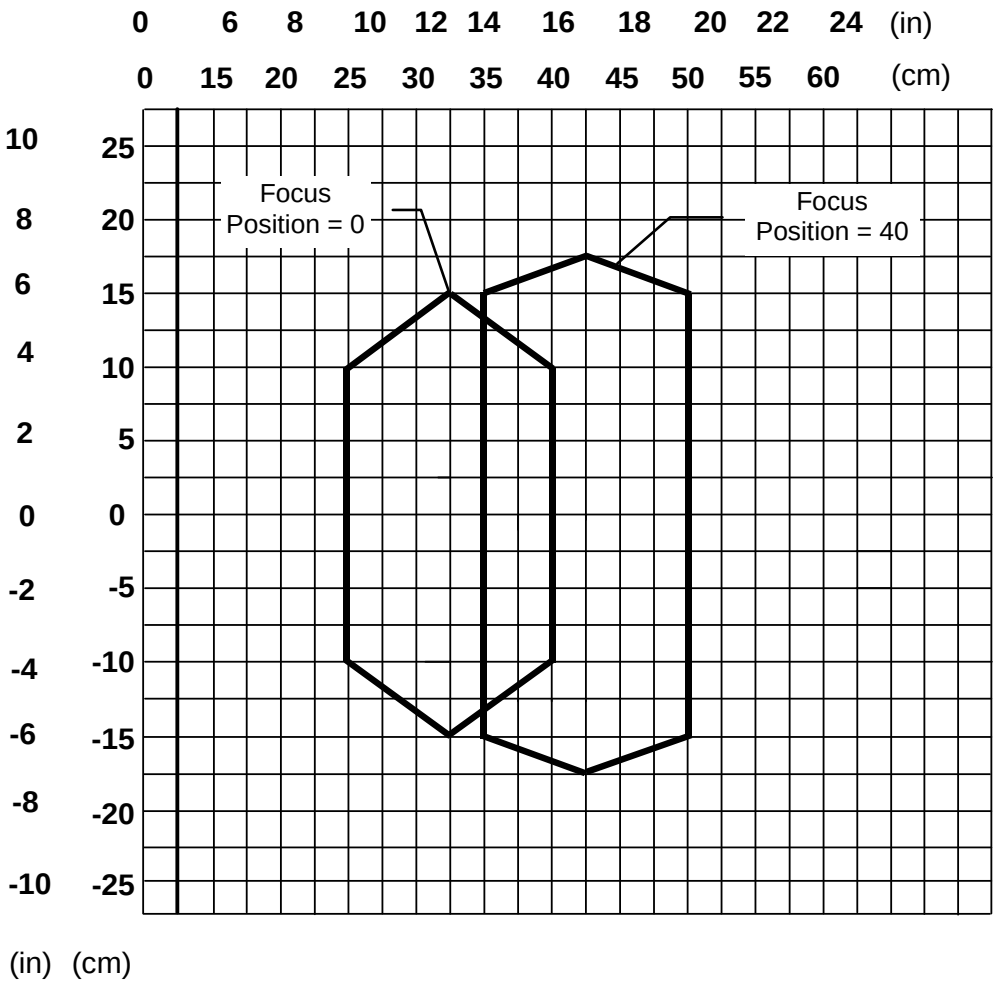


**Figure 107 – Oscillating Mirror Model 0.20 mm / 8 mils Reading Diagram**

**CONDITIONS**

Code = Interleaved 2/5 or Code 39
PCS = 0.90
Pitch angle = 0°
Skew angle = 10° - 20°
Tilt angle = 0°

**Note:** (0,0) is the center of the laser beam output window.

## DS6300-105-0XX (oscillating mirror) - Resolution: 0.30 mm/12 mils

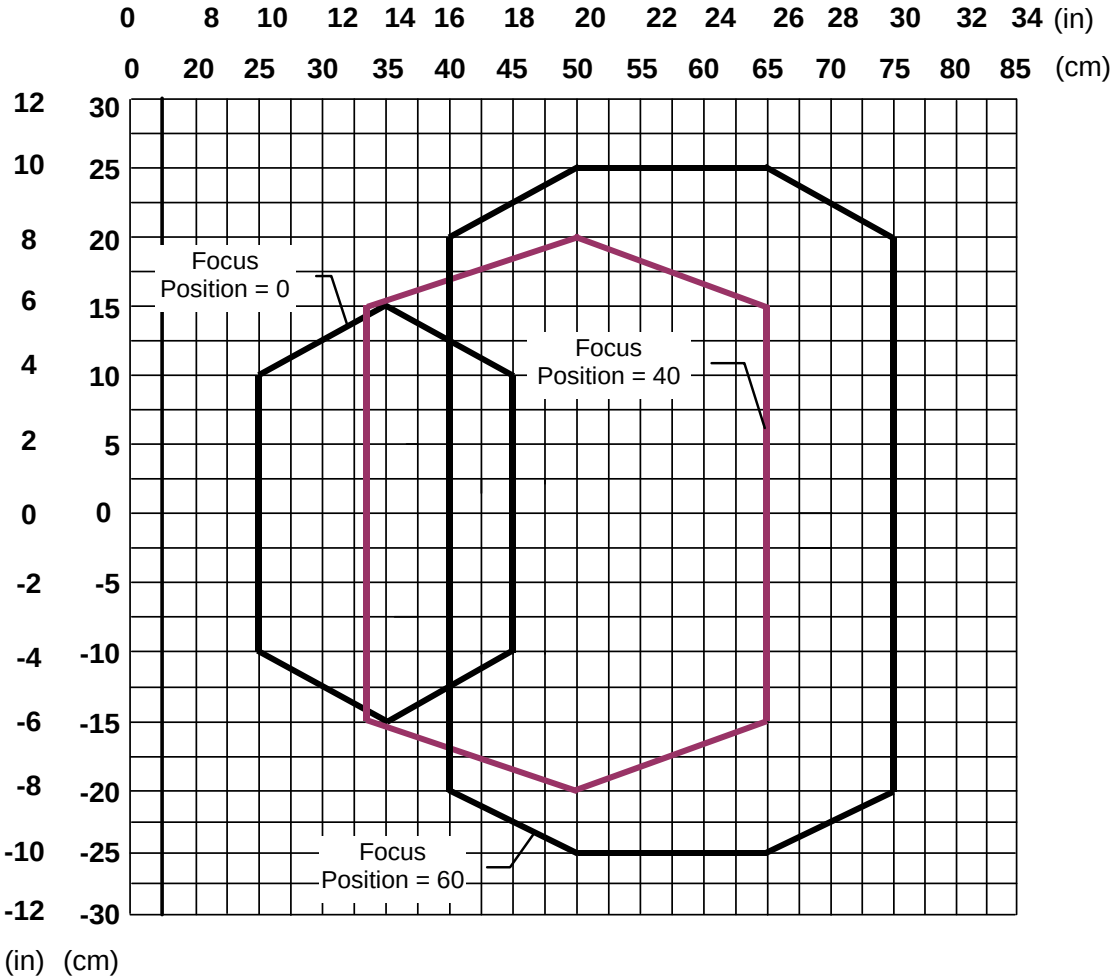


**Figure 108 - Oscillating Mirror Model 0.30 mm / 12 mils Reading Diagram**

**CONDITIONS**

Code = Interleaved 2/5 or Code 39
PCS = 0.90
Pitch angle = 0°
Skew angle = 10° - 20°
Tilt angle = 0°

**Note:** (0,0) is the center of the laser beam output window.

**DS6300-105-0XX (oscillating mirror) - Resolution: 0.38 mm/15 mils**

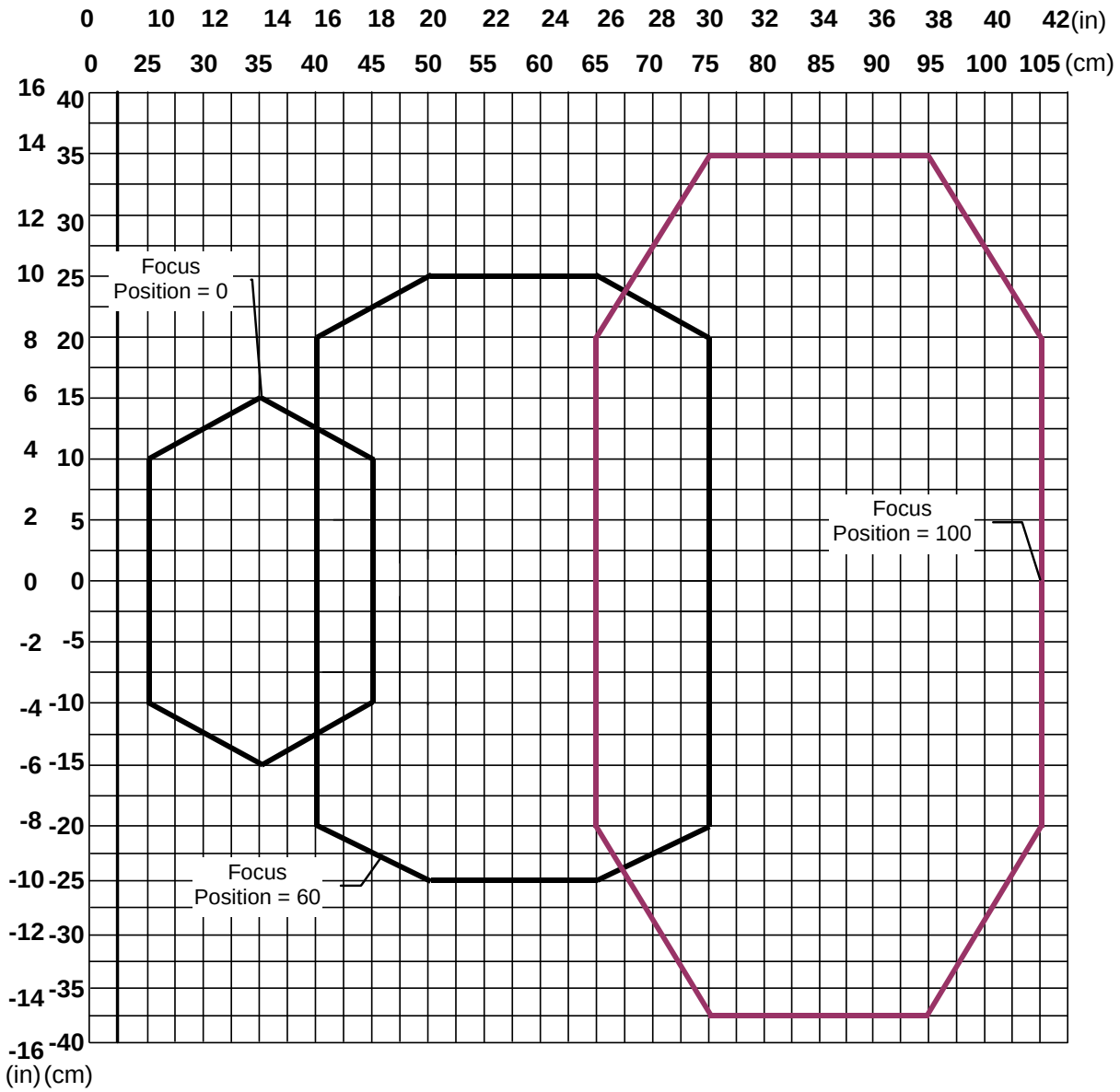


**Figure 109 - Oscillating Mirror Model 0.38 mm / 15 mils Reading Diagram**

**CONDITIONS**

Code = Interleaved 2/5 or Code 39

PCS = 0.90

Pitch angle = 0°

Skew angle = 10° - 20°

Tilt angle = 0°

**Note:** (0,0) is the center of the laser beam output window.

## DS6300-105-0XX (oscillating mirror) - Resolution: 0.50 mm/20 mils

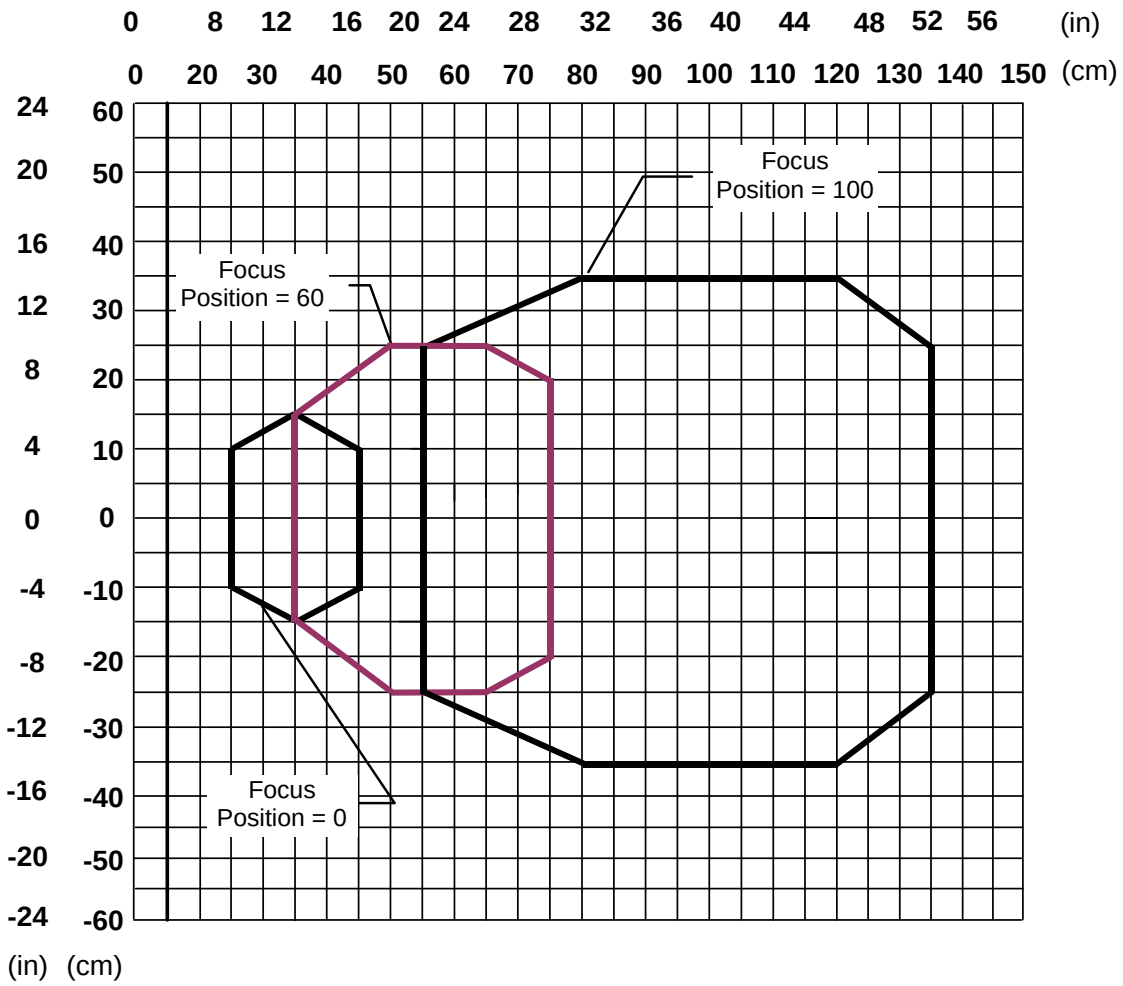


**Figure 110 - Oscillating Mirror Model 0.50 mm / 20 mils Reading Diagram**

**CONDITIONS**

Code = Interleaved 2/5 or Code 39
PCS = 0.90
Pitch angle = 0°
Skew angle = 10° - 20°
Tilt angle = 0°

**Note:** (0,0) is the center of the laser beam output window.

## 9.4.3 DS6300 with GFX-60

### DS6300 with GFX-60 - Resolution: 0.20 mm/8 mils

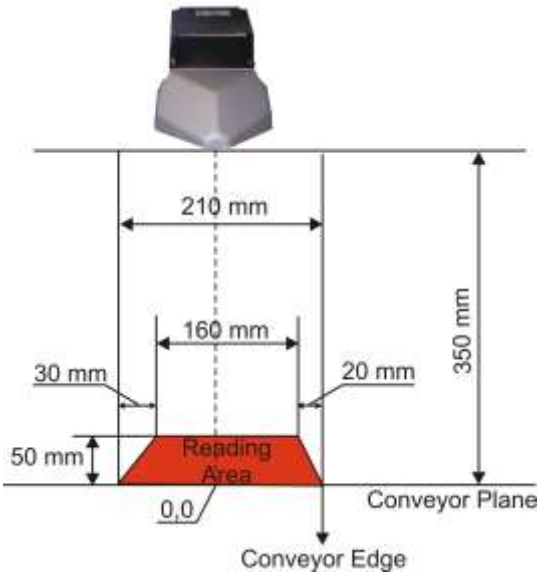


**Figure 111 – GFX-60 0.20 mm / 8 mils Reading Diagram**

**Note:** 0 value on the X axis is measured from the nose of the GFX-60
0 value on the Y axis is measured from the conveyor plane
focus position = 0

### DS6300 with GFX-60 - Resolution: 0.30 mm/12 mils

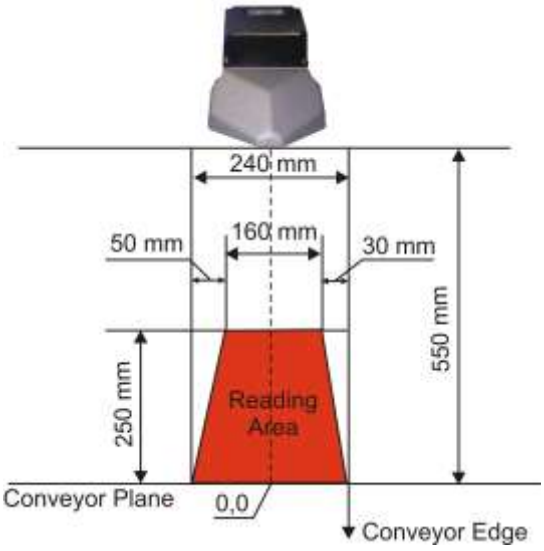


**Figure 112 - GFX-60 0.30 mm / 12 mils Reading Diagram**

**Note:** 0 value on the X axis is measured from the nose of the GFX-60
0 value on the Y axis is measured from the conveyor plane
focus position = 40

## DS6300 with GFX-60 - Resolution: 0.50 mm/20 mils

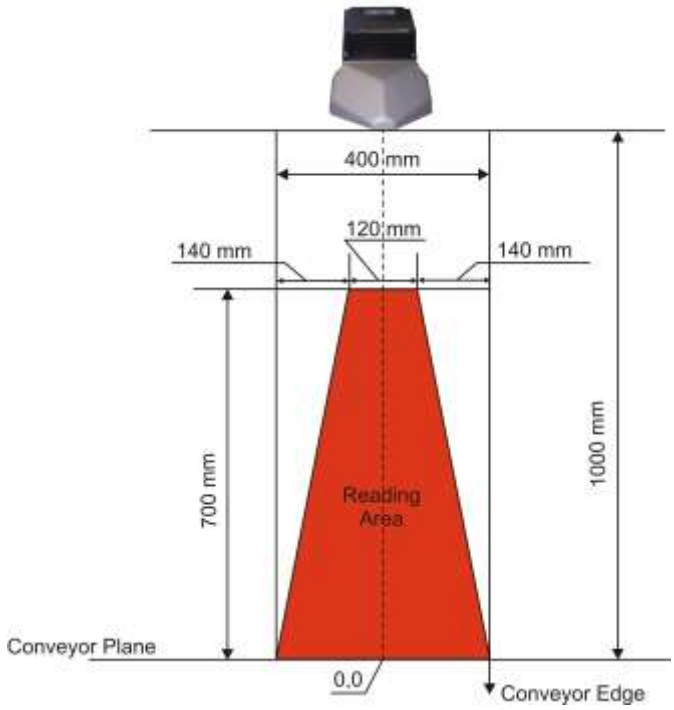


**Figure 113 - GFX-60 0.50 mm / 20 mils Reading Diagram**

**Note:** 0 value on the X axis is measured from the nose of the GFX-60
0 value on the Y axis is measured from the conveyor plane
focus position = 100

## DS6300 with GFX-60 - Resolution: 1.00 mm/40 mils

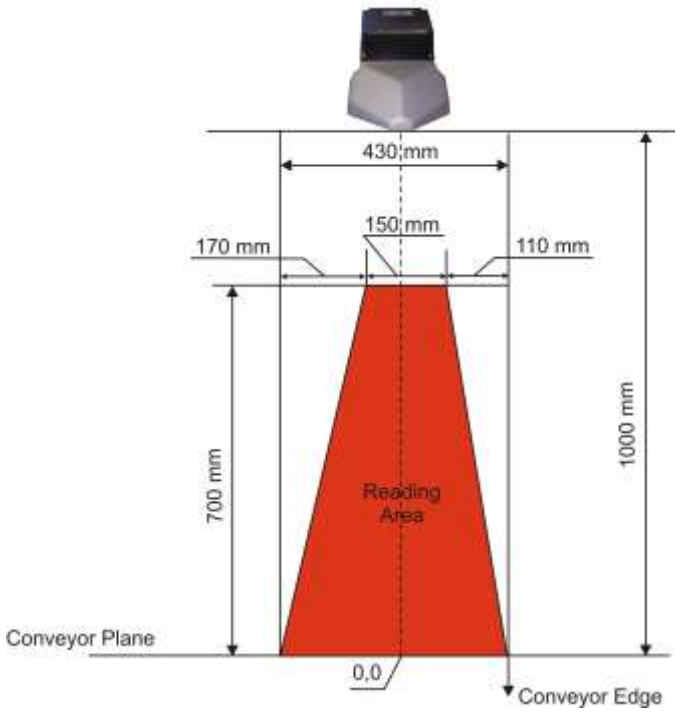


**Figure 114 - GFX-60 1.00 mm / 40 mils Reading Diagram**

**Note:** 0 value on the X axis is measured from the nose of the GFX-60
0 value on the Y axis is measured from the conveyor plane
focus position = 100

# 10 MAINTENANCE

## 10.1 CLEANING

Clean the laser beam output window periodically for correct operation of the scanner (see Figure A).

Dust, dirt, etc. on the window may alter the reading performance.

Repeat the operation frequently in particularly dirty environments.

Use soft material and alcohol to clean the window and avoid any abrasive substances.

**WARNING**

*Clean the window of the DS6300 when the scanner is turned off or at least when the laser beam is not active.*

## 10.2 EXTERNAL MEMORY BACKUP & RESTORE

Backup and Restore is vital to all applications in that it provides a method to quickly replace a reader and return the station to full capacity in the event of a failure. The External Memory Backup and Restore procedure is the preferred method since it always provides complete backup and restore functions (Configuration and Environmental parameters).

When the DS6300 scanner is connected through CBX series connection boxes, Backup and Restore is provided through the BM100 accessory module installed inside the CBX100 or CBX500 connection box.

If the DS6300 scanner is integrated into an ID-NET™ network having an SC4000 ID-NET™ controller as Master, then the SC4000 also provides the Backup and Restore procedure.

This procedure can be performed directly from the Genius™ Device menu.

To manually perform the Backup and Restore procedure see the relative BM100 or SC4000 manual for details.

## 10.3 AUTOMATIC SCANNER REPLACEMENT (ASR)

**NOTE**

*The ASR procedure is available for backward compatibility or for applications that do not use the CBX/SC4000, however it is not the preferred method.*

The Datalogic Automatic Scanner Replacement (ASR) procedure allows restoring system functioning automatically after one or more scanners are replaced in a Master/Slave Lonworks network.

The ASR procedure restores only a part of the system parameters: common slave parameters (Code Selection and Reconstruction).

The Master must be prepared at the time of installation in order for this procedure to work correctly.

### 10.3.1 ASR Network Configuration

1. On the Master scanner, **check the Modify & Backup Lon Slave Scanner Configuration parameter** in Genius™ and configure the Lonworks Slave Scanner Common Parameters (Code and Reconstruction Parameters).
2. Enable the ASR procedure through the **Enable A.S.R. parameter** in the Master configuration.
3. Send the configuration to the Master EEPROM to force the Slave Operating Mode, Code Reading Symbologies and Reconstruction parameters.

   Now the Slave scanners are configured through the Master (ASR parameters stored in the Master) and the ASR procedure is implemented.
4. Save this configuration to file (.ddc).

### 10.3.2 Scanner Replacement Procedure

**NOTE**

*The ASR procedure requires replacing one scanner at a time.*

Slave

1. Power down the entire system.
2. Replace the Slave scanner with a new one (default settings).
3. Power up the system and wait for initialization.

Master

1. Load the saved configuration from file (.ddc) to a new Master scanner.
2. Power down the entire system.
3. Replace the old Master scanner with the new one.
4. Power up the system and wait for initialization.

**NOTE**

*The ASR works only if both the Master and Slave devices have software 6.40 or later.*

# 11 TROUBLESHOOTING

| | |
|---|---|
| **NOTE** | *Before contacting your local Datalogic office or Datalogic Partner or ARC, it is suggested to save the device configuration to a *.ddc file by means of the Genius™ software configuration program and check the device exact model and serial number.* |

| TROUBLESHOOTING GUIDE | |
|---|---|
| **Problem** | **Suggestion** |
| **Power On:**<br>the “Power On” LED is not lit. | • Is power connected?<br>• If using an external power supply (like PG6000), is it connected to the AC source?<br>• If using rail power, does rail have power?<br>• If using CBX100/CBX500, does it have power (check switch and LED)?<br>Check if you are referring to the 25/26-pin connector or to the CBX100/CBX500 spring clamp connectors.<br>• Measure voltage at pin 13 and 25 (for 25/26-pin connector) or at spring clamp **Vdc** and **GND** (for CBX100/CBX500). |
| **On Line Mode:**<br>the Master’s “Phase On” LED is not lit (when external trigger activates). | • Check carefully if you are referring to the 25/26-pin connector or to the CBX100/CBX500 spring clamp connectors.<br>• Is sensor connected to EXT TRIG/PS input?<br>• Is power supplied to photo sensor?<br>• Is power supplied to one out of the two EXT TRIG/PS (NPN output)?<br>• Is one out of the two EXT TRIG/PS grounded (PNP output)?<br>• Are the photo sensor LEDs (if any) working correctly?<br>• Is the sensor/reflector system aligned (if present)? |
| **On Line Mode:**<br>the Master’s “Phase On” LED is correctly lit but nothing happens (no reading results). | • Is the software configuration consistent with the application condition (operating mode, etc.)?<br>In the Genius™ software configuration program select the OPERATING MODES folder and check for related parameters. |
| **Serial On Line Mode:**<br>the reader is not triggered (no reading results). | • In the Genius™ program select the OPERATING MODE folder and check if serial on line is enabled as “On Line options” parameter value.<br>• Are the Start-Stop string correctly assigned?<br>• Is the serial trigger source correctly connected and configured)? |

| TROUBLESHOOTING GUIDE | |
|---|---|
| **Problem** | **Suggestion** |
| **On Line Mode and Serial On Line Mode:**<br>the reader does not respond correctly to the expected external signal end. | • In the Genius™ software configuration program select the OPERATING MODES folder and check the “Reading Phase Timeout” parameterization. |
| **Reading:**<br>it is not possible to read the target barcode (always returns No Read) | • Check synchronization of reading pulse with object to read.<br>• Place barcode in the center of scan line and run TEST MODE (selectable by Genius™ as Operating Modes).<br>If you still have troubles, check the following:<br>  • Is the reading distance within that allowed (see reading diagrams)?<br>  • Choose the CODE tab and enable different code types (except Pharmacode). LENGTH = Variable.<br>  • Is the barcode quality sufficient?<br>• If you had no success, try to perform the test using the BARCODE TEST CHART included with the product. |
| **Communication:**<br>the device is not transmitting anything to the host. | • Is serial cable connected?<br>• Is correct wiring respected?<br>• If using MAIN RS232 or RS485 interface, is the reference ground connected to proper SGND Main Isolated (also referred to as GND_ISO)? Be careful that it is not completely different from GND power ground.<br>• If using CBX100/CBX500, be sure the RS485 termination switch is positioned to OFF.<br>• Are serial host settings equivalent to serial device settings? |
| **Communication:**<br>data do not appear on the terminal. | • In the Genius™ program enable the DATA COMMUNICATION SETTINGS/MAIN-AUXILIARY PORT\DATA TX parameter. |
| **Communication:**<br>data transferred to the host are incorrect, corrupted or incomplete. | • In the Genius™ program select the DATA COMMUNICATION SETTINGS/DATA FORMAT folder and check for HEADER, TERMINATOR, SEPARATOR and FILL CHAR values.<br>• Check the CODE FIELD LENGTH value, too.<br>• Are the COM port parameters correctly assigned? |

| TROUBLESHOOTING GUIDE | |
|---|---|
| **Problem** | **Suggestion** |
| **How do I obtain my units' serial numbers?** | • The device serial number is printed on a label that is affixed above the connector panel of the reader.<br>• The serial number is also displayed when connecting the device through the Genius™ program.<br>• Serial numbers consist of 9 characters: one letter, 2 numbers, another letter followed by 5 numbers. |

# 12 TECHNICAL FEATURES

| | | |
|---|---|---|
| **ELECTRICAL FEATURES** | | |
| Supply Voltage | 15 to 30 Vdc | |
| Power Consumption | 15 W typical<br>1.3 to 0.5 A max. (including startup current) | |
| Common Communication Interfaces | **Main** | **Baud Rate** |
| | RS232 | 1200 to 115200 |
| | RS485 full-duplex | |
| | RS485 half-duplex | |
| | **Auxiliary** | |
| | RS232 | 1200 to 115200 |
| | **Other** | |
| | Lonworks | 1.25 Mb/s |
| Model–Dependent Communication Interfaces | Ethernet<br>DeviceNet<br>Profibus | 100 Mb/s<br>up to 500 Kb/s<br>up to 12 Mb/s |
| Inputs<br>Ext. Trigger 1, Encoder<br>2 aux. digital inputs | (optocoupled NPN or PNP) | |
| Outputs<br>3 software programmable digital outputs | (optocoupled) | |
| **OPTICAL FEATURES** | | |
| Light Receiver | Avalanche photodiode | |
| Wavelength | 630 to 680 nm | |
| Safety Class | Class 2 - EN60825-1; Class II - CDRH | |
| Laser Control | Security system to turn laser off in case of motor slow down | |
| **READING FEATURES** | | |
| Scan Rate | 600-1200 scans/s | |
| Maximum Resolution<br>Max. Reading Distance<br>Max. Reading Width<br>Max. Depth of Field | (see reading diagrams in par. 9.4) | |
| **USER INTERFACE** | | |
| LCD Display | 2 lines by 16 characters LCD | |
| Keypad | 3 keys | |
| LED Indicators | Power On (red)<br>Phase On (yellow)<br>TX Data (green) | |

| **SOFTWARE FEATURES** | | |
|---|---|---|
| Readable Codes | Interleaved 2/5<br>Code 39 Standard<br>Codabar<br>Code 128<br>GS1-128 (ex EAN 128)<br>Code 93 (standard and full ASCII)<br>EAN/UPC (including Add-on 2 and Add-on 5)<br>GS1 DataBar (including Limited and Expanded) | |
| Code Selection | Up to 10 codes during one reading phase | |
| Headers and Terminators | Up to 128-byte headers and 128-byte terminators | |
| Operating Modes | On Line, Serial On Line, Automatic, Test, Continuous | |
| Configuration Modes | Genius™ utility program | |
| Parameter Storage | Non-volatile internal FLASH | |
| **ENVIRONMENTAL FEATURES** | | |
| Operating Temperature<br>Storage Temperature<br>Humidity | 0° to +40 °C (+32° to +104 °F)<br>-20° to +70 °C (-4° to +158 °F)<br>90% non condensing | |
| Ambient Light Immunity | 3500 lux | |
| Vibration Resistance:<br>EN 60068-2-6<br>2 hours on each axis | 14 mm @ 2 to 10 Hz<br>1.5 mm @ 13 to 55 Hz<br>2 g @ 70 to 200 Hz | |
| Shock Resistance:<br>EN 60068-2-27<br>3 shocks on each axis | 30 g; 11 ms | |
| Protection Class – EN 60529 | IP64* | |
| **PHYSICAL FEATURES** | **Standard Models** | **Oscillating Mirror Models** |
| Mechanical Dimensions | 110 x 113 x 99 mm<br>(4.33 x 4.45 x 3.9 in) | 113 x 180 x 104.5 mm<br>(4.45 x 7.08 x 4.11 in) |
| Weight | 1.5 kg. (3.3 lb) | 2.0 kg. (4.4 lb) |

* IP50 grade for older RJ45 Ethernet versions.

# A ALTERNATIVE LAYOUTS

## POINT-TO-POINT

Using a Point-to-Point layout, the data is transmitted on the Main interface as well as on the Auxiliary interface. The Main interface can be selected for RS232 or RS485 full-duplex communications. Two different layouts are available according to the DS6300 reader model used for the connection.

### Standard Models

When On-Line operating mode is used, the reader is activated by an External Trigger/PS (photoelectric sensor) when the object enters its reading zone. In the following case, the signal is passed to the DS6300 through the CBX100/CBX500, which also passes power to the system from the power supply (i.e. PWR-120).

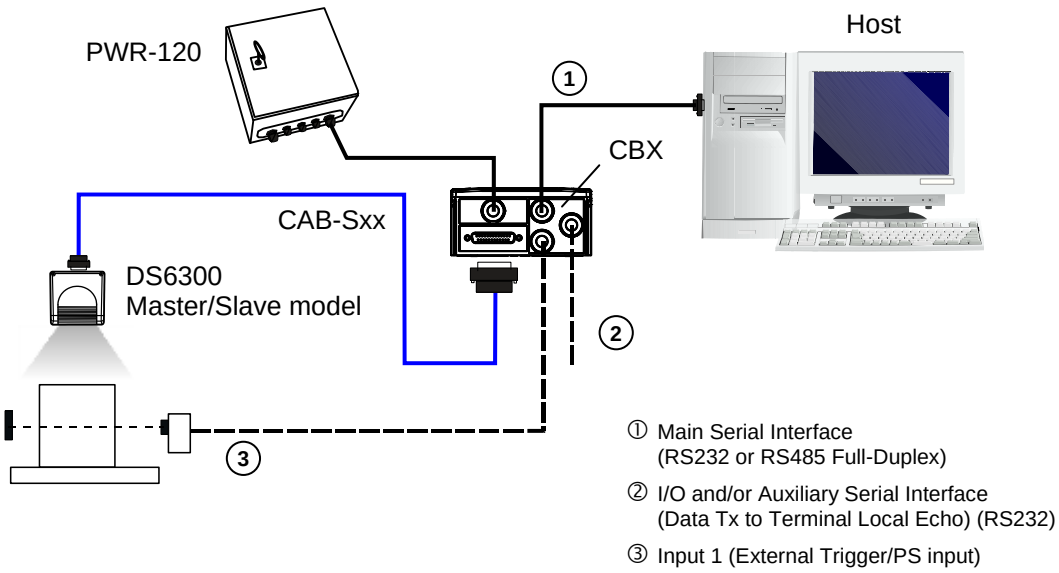


**Figure 115 – Point-to-Point for Master/Slave Models**

## Fieldbus Models

In this case no External Trigger is used and the CBX100/CBX500 only passes power to the reader. The DS6300 Fieldbus models (Ethernet, DeviceNet or Profibus) are connected to a remote Host. It can be activated by a signal generated by the remote Host or always be active if working in Automatic operating mode.

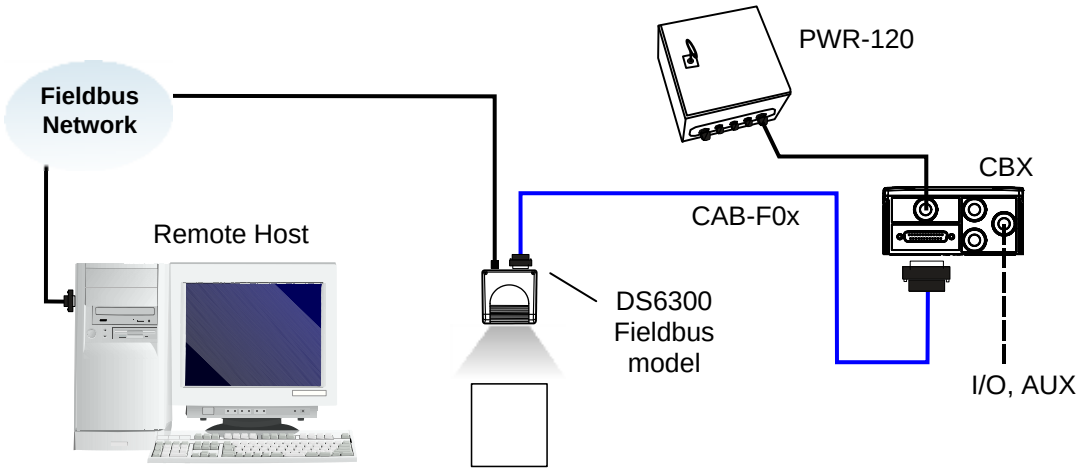


**Figure 116 – Point-to-Point for Fieldbus Models**

## ID-NET™ GATEWAY

The CBX800 Gateway can be used to integrate a DS6300 reader into a high speed ID-NET™ network consisting of different scanners not provided with a Lonworks interface.

In this case the DS6300 uses its main RS232/RS485 interface to communicate with the CBX800.

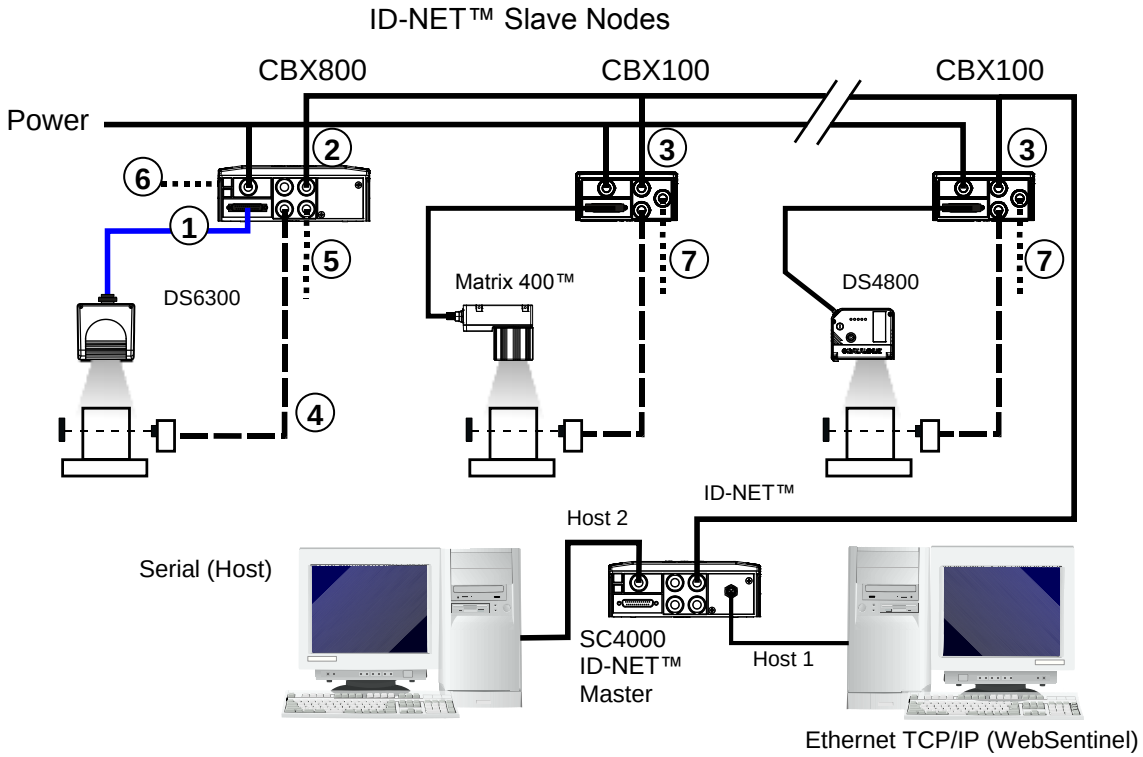


① CBX800 Source Interface (CAB-Sxx)
② CBX800 ID-NET™ Interface
③ Reader ID-NET™ Interface
④ External Trigger (for On-Line Mode)
⑤ Host Aux for CBX800 Configuration
⑥ Source Aux for Source Reader Configuration
⑦ Reader Auxiliary Interface for Reader Configuration

**Figure 117 – DS6300 Slave/CBX800 Gateway in an ID-NET™ High Speed Network**

**NOTE**

*For 6K family scanners having software version 6.80 or later, an alternative fixed speed (57600 baud) ID-NET™ layout can be made without the use of the CBX800 provided:*

- *the 6K scanner is only an ID-NET™ slave device*
- *the ID-NET™ master is only an SC4000 Controller*

*See the ID-NET™ Application Note for details.*

## PASS THROUGH

When Pass Through is activated on the Auxiliary interface, the DS6300 reader can be integrated in a network consisting of different scanners not provided with a Lonworks interface.

This connection mode allows two or more devices to be connected to a single external serial interface. The DS6300 transmits the messages received by its auxiliary interface onto its main interface. The received data is transmitted "as is", (passed-through), and therefore any data formatting requirements must be made at each individual reader.

In this configuration a series of scanners can be connected together using RS232 on the main interface and all messages will be passed through this chain to the host. The reading phase of each scanner is independent from the others. In Pass Through connections each scanner is provided with its relative External Trigger (multi P.S.).

Applications can be implemented to connect a device such as a hand-held reader to the Auxiliary port for manual code reading capability.

For the RS232 connections the maximum cable length is 15 m (50 ft).

The scanners represented in the following figures are configured in Pass Through mode.

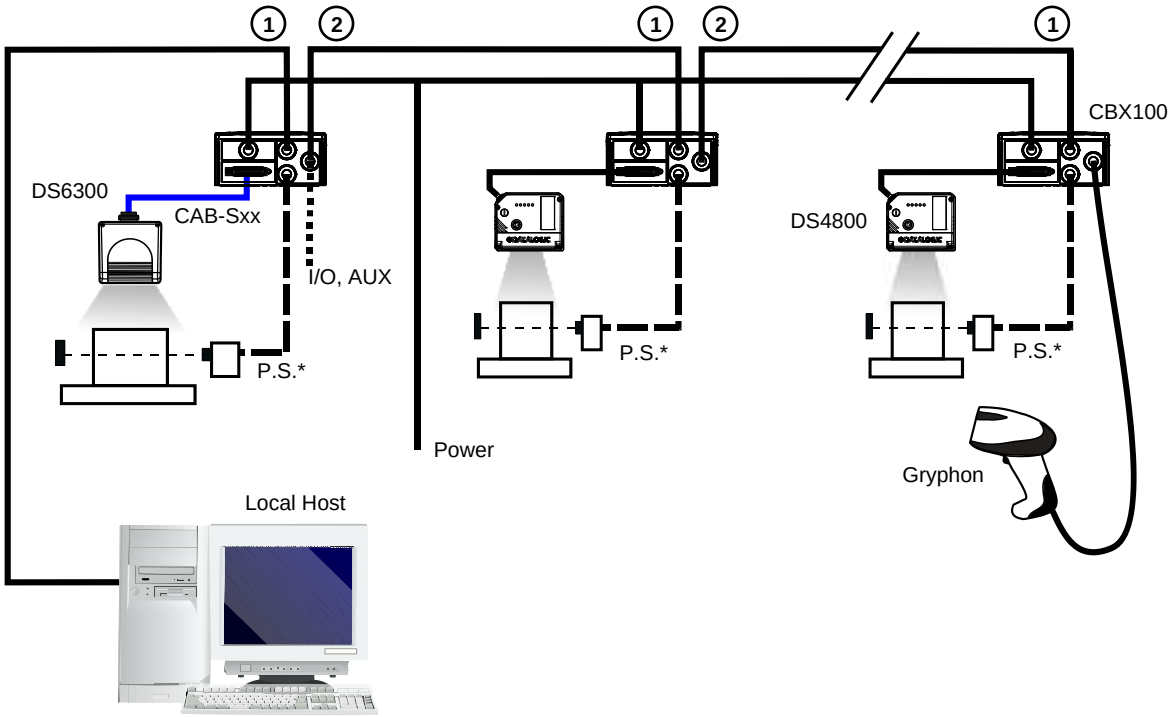


(1) Main Serial Interface

(2) Auxiliary Serial Interface

* P.S. (Presence Sensor) connected to Input 1 (External Trigger/PS) input.

**Figure 118 – Pass Through Connection for DS6300 Master/Slave Models**

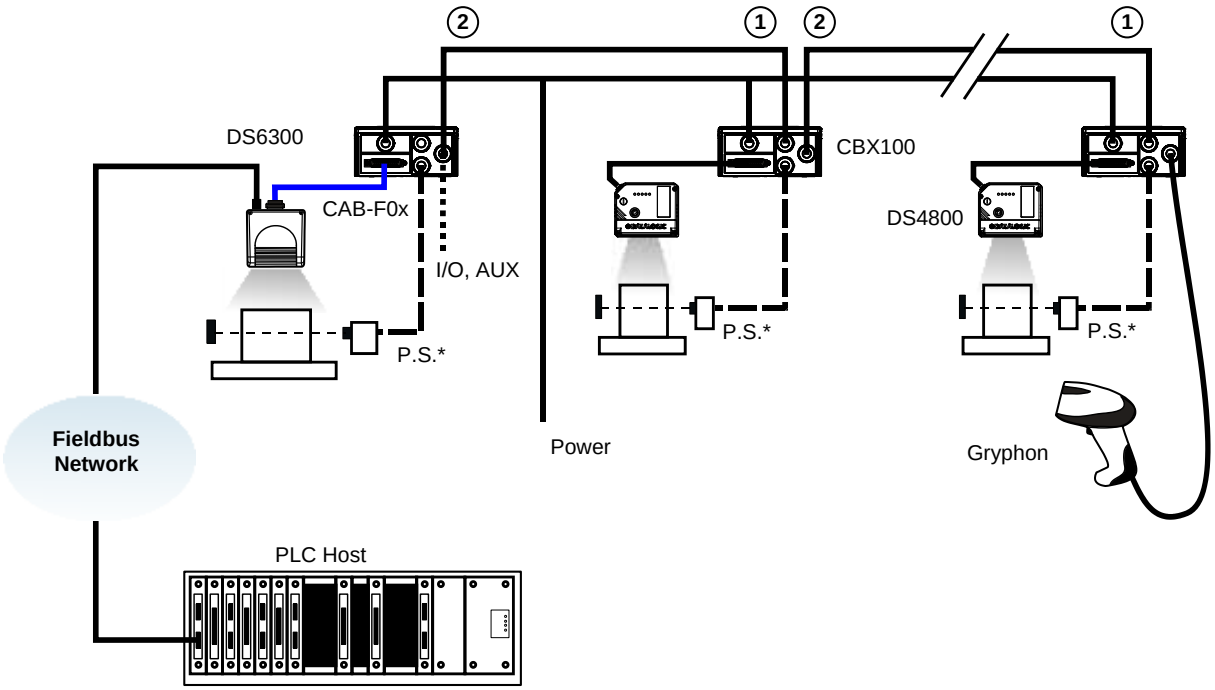


1 Main Serial Interface 2 Auxiliary Serial Interface

* P.S. (Presence Sensor) connected to Input 1 (External Trigger/PS) input.

**Figure 119 – Pass Through Connection for Fieldbus Models**

## RS232 MASTER/SLAVE

The RS232 master/slave connection is used to integrate a DS6300 reader in a network consisting of different scanners not provided with a Lonworks interface.

The Slave scanners use RS232 only on the main and auxiliary interfaces. Each slave scanner transmits the messages received by the auxiliary interface onto the main interface. All messages will be transferred towards the master.

The master scanner is connected to the Host PC on the main RS232 serial interface through the CBX connection box.

In RS232 Master/Slave connections the External Trigger/PS signal is unique to the system (single P.S.).

**NOTE**

*The **DS6300 Standard model**, working as Master in an RS232 network, may be simultaneously connected to a Lonworks network consisting of DS6300 slave scanners. Be careful when assigning the slave address, since the number of the first Lonworks slave must be a progressive number with respect to the address number defined for the last slave scanner of the RS232 network. For example, if the RS232 network consists of Slave 1 and Slave 2, the address to be assigned to the first Lonworks slave scanner will be Slave 3 (not Slave 1).*

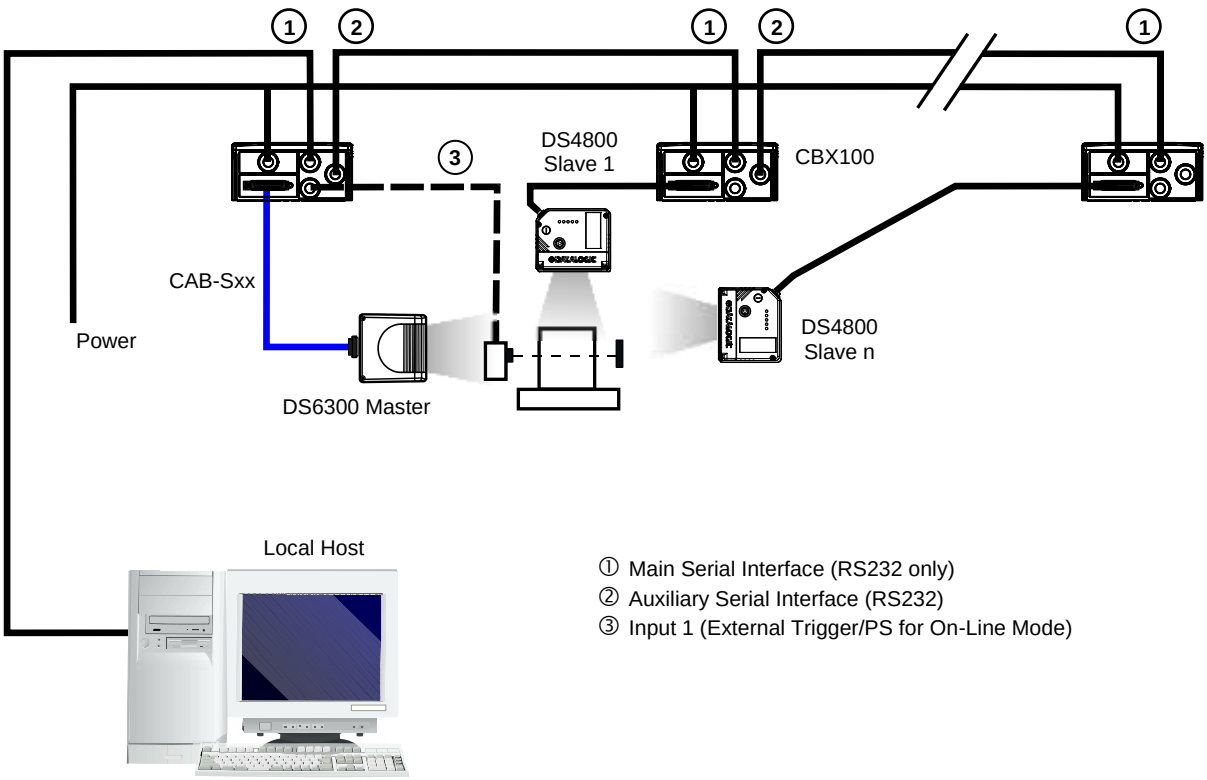


**Figure 120 – RS232 Master/Slave for DS6300 Master/Slave Models**

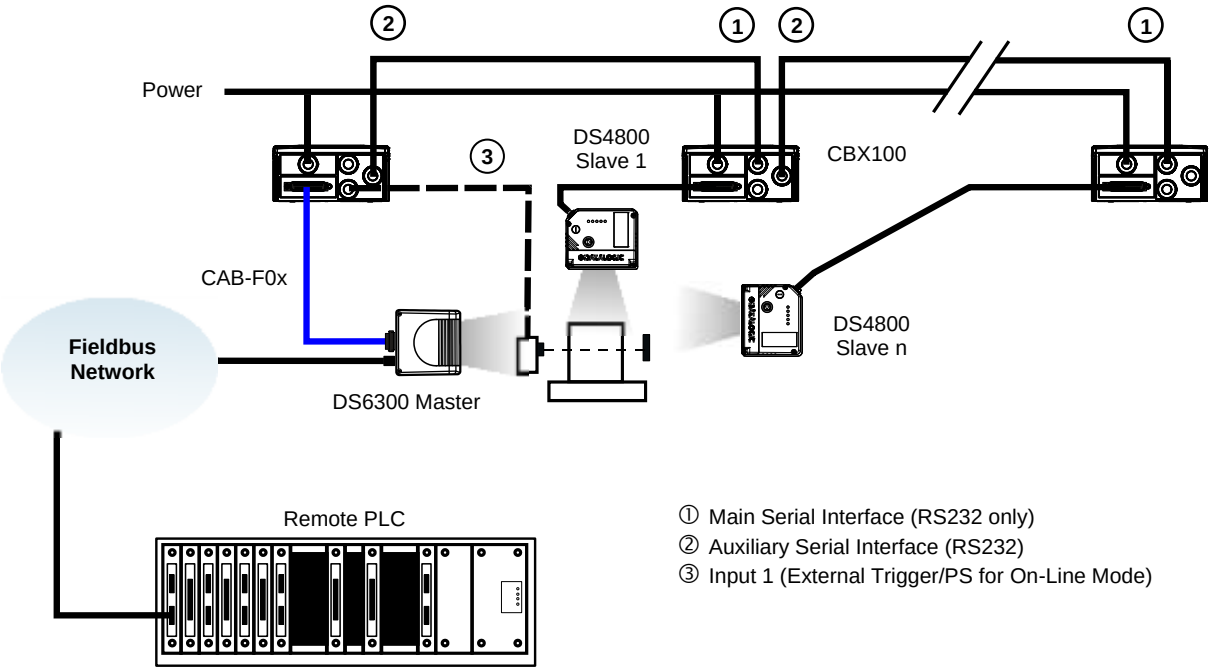


**Figure 121 – RS232 Master/Slave for DS6300 Fieldbus Models**

## MULTIPLEXER

The Multiplexer connection is used to integrate a DS6300 slave reader in a Multidrop network consisting of different scanners not provided with a Lonworks interface.

Each scanner is connected to a Multiplexer (MX4000) with the RS485 half-duplex main interface.

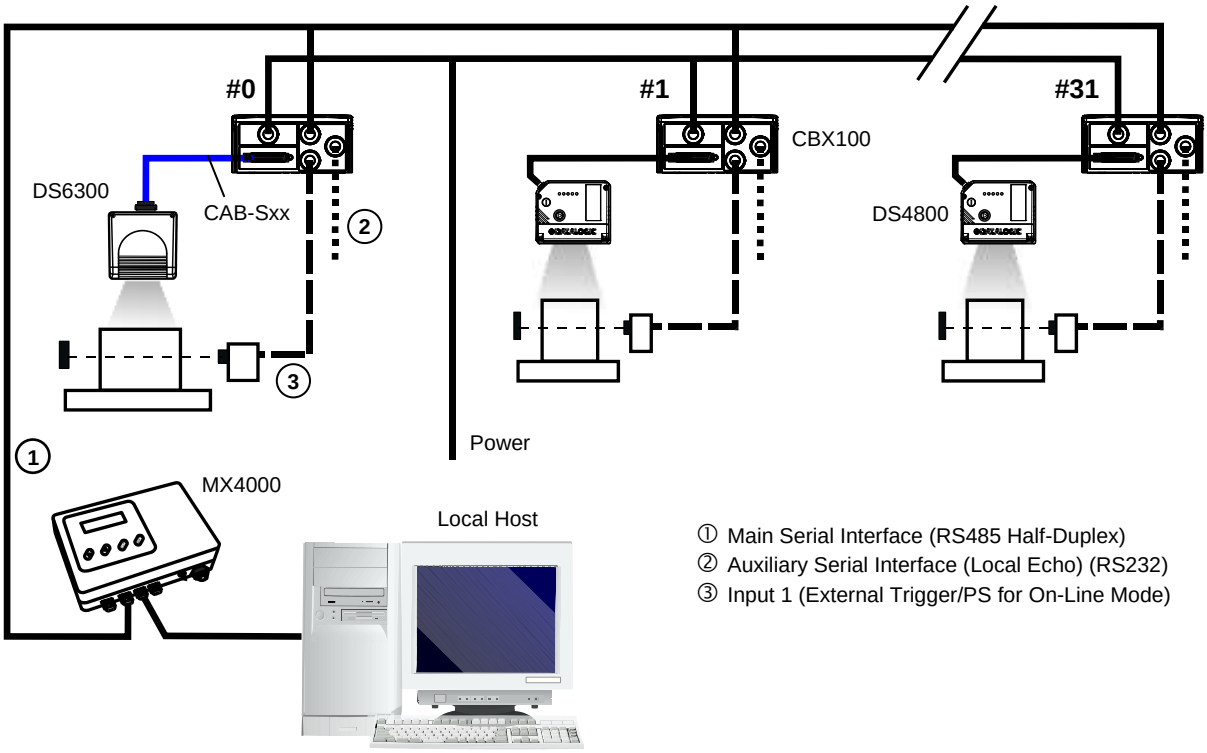


**Figure 122 – Multiplexer for DS6300 Master/Slave Models**

The auxiliary serial interface of the slave scanners can be used to visualize collected data or to configure it using the Genius™ utility.

When On-Line operating mode is used, the scanner is activated by an External Trigger/PS when the object enters its reading zone.

# GLOSSARY

**ACR™ 4**

Each version of the base has the powerful code reconstruction technology (ACR™ 4). The new fourth generation ACR™ considerably increases the code reconstruction reading capability in the case of damaged or very tilted barcodes.

**Aperture**

Term used on the required CDRH warning labels to describe the laser exit window.

**Barcode**

A pattern of variable-width bars and spaces which represents numeric or alphanumeric data in machine-readable form. The general format of a barcode symbol consists of a leading margin, start character, data or message character, check character (if any), stop character, and trailing margin. Within this framework, each recognizable symbology uses its own unique format.

**Barcode Label**

A label that carries a barcode and can be affixed to an article.

**Baud Rate**

A unit used to measure communications speed or data transfer rate.

**CDRH (Center for Devices and Radiological Health)**

This organization (a service of the Food and Drug Administration) is responsible for the safety regulations governing acceptable limitations on electronic radiation from laser devices. Datalogic devices are in compliance with the CDRH regulations.

**EEPROM**

Electrically Erasable Programmable Read-Only Memory. An on-board non-volatile memory chip.

**Full Duplex**

Simultaneous, two-way, independent transmission in both directions.

**Half Duplex**

Transmission in either direction, but not simultaneously.

**Host**

A computer that serves other terminals in a network, providing services such as network control, database access, special programs, supervisory programs, or programming languages.

**Interface**

A shared boundary defined by common physical interconnection characteristics, signal characteristics and meanings of interchanged signals.

**LED (Light Emitting Diode)**

A low power electronic device that can serve as a visible or near infrared light source when voltage is applied continuously or in pulses. It is commonly used as an indicator light and uses less power than an incandescent light bulb but more than a Liquid Crystal Display (LCD). LEDs have extremely long lifetimes when properly operated.

**Multidrop Line**
A single communications circuit that interconnects many stations, each of which contains terminal devices. See RS485.

**Parameter**
A value that you specify to a program. Typically parameters are set to configure a device to have particular operating characteristics.

**Position**
The position of a scanner or light source in relation to the target of a receiving element.

**Protocol**
A formal set of conventions governing the formatting and relative timing of message exchange between two communicating systems.

**Resolution**
The narrowest element dimension which can be distinguished by a particular reading device or printed with a particular device or method.

**RS232**
Interface between data terminal equipment and data communication equipment employing serial binary data interchange.

**RS485**
Interface that specifies the electrical characteristics of generators and receivers for use in balanced digital multipoint systems such as on a Multidrop line.

**Scanner**
A device that examines a printed pattern (barcode) and either passes the uninterpreted data to a decoder or decodes the data and passes it onto the Host system.

**Serial Port**
An I/O port used to connect a scanner to your computer.

**Signal**
An impulse or fluctuating electrical quantity (i.e.: a voltage or current) the variations of which represent changes in information.

**Symbol**
A combination of characters including start/stop and checksum characters, as required, that form a complete scannable barcode.

**Trigger Signal**
A signal, typically provided by a photoelectric sensor or proximity switch, which informs the scanner of the presence of an object within its reading zone.

**UPC**
Acronym for Universal Product Code. The standard barcode type for retail food packaging in the United States.

**Visible Laser Diode**
A light source used in scanners to illuminate the barcode symbol. Generates visible red light at wavelengths between 630 and 680 nm.

# INDEX


## A

Accessories, 7
ACR™ 4, 81
Alternative Layouts, 101
Auxiliary RS232 Interface, 27, 43

## C

CBX Electrical Connections, 20
CE Compliance, ix
Cleaning, 94
Code Verifier, 32, 46
Compliance, vii
Custom Cable Electrical Connections, 36

## D

DeviceNet Connector Panel, xiii
DeviceNet Interface, 56

## E

Electrical Safety, vii
Ethernet Interface, 53
Ethernet Interface (older models), 54
Ethernet M12 Connector Panel, xii
Ethernet RJ45 Connector Panel, xii

## F

FCC Compliance, ix
Fieldbus Connections, 53
Focus Adjustment, 79

## G

Genius™
  Advanced Configuration, 72
  Installation, 64
  Wizard for Quick Reader Setup, 64
Glossary, 108
Guide to Installation, xiv

## I

ID-NET™ Gateway, 103
Indicators, 6
Inputs, 28, 43
Installation, 9

## K

Keypad and Display, 6

## L

Laser Safety, vii
LEDs, 6
Local Lonworks Network Layouts, 58
Lonworks Connections, 49
Lonworks Interface, 50

## M

Main Serial Interface, 22, 38
Master/Slave Connector Panel, xii
Model Description, 3
Mounting GFX-60, 15
Mounting the Scanner, 10
Mounting with Accessories, 13
Multiplexer, 107

## N

Network Setup, 67
Network Termination, 50

## O

Operating Mode
  Automatic, 66
  On Line, 66
  Test, 65
Oscillating Mirror Models, 3
Outputs, 32, 46
Overall Dimensions, 11

## P

Package Contents, 9
Parameter Explorer Window, 72
Parameter Groups
  Default Values, 75
Pass Through, 104
Patents, vi
Pitch Angle, 17
Point-to-Point, 101
Positioning, 17
  16° Skew Positioning, 18
  45° Skew Positioning, 19
Power Supply, viii, 22, 38
Profibus Connector Panel, xiii
Profibus Interface, 57

## R

Reading Diagrams, 84

DS6300 with GFX-60, 92
Oscillating Mirror Models, 88
Standard Models, 84
Reading Features, 79
Reference Documentation, vi
RS232 Interface, 23, 39
RS232 Master/Slave, 105
RS485 Full-Duplex, 24, 40
RS485 Half-Duplex, 25, 41

## S

Scanner Assignment using Keypad, 6
Scanner Replacement, 94
Skew Angle, 17
Software Configuration, 64
Support Through The Website, vi

## T

Technical Features, 99
Terminators, 50
Test Mode using Keypad, 7
Tilt Angle, 18
Troubleshooting, 96
Typical Layouts, 58

DATALOGIC

www.datalogic.com