REFERENCE MANUAL

> DX8200A

DATALOGIC

Datalogic S.r.l.
Via S. Vitalino 13
40012 Calderara di Reno
Bologna - Italy

DX8200A Reference Manual

Ed.: 07/2017

© 2005 – 2017 Datalogic S.p.A. and/or its affiliates ◆ ALL RIGHTS RESERVED. ◆ Without limiting the rights under copyright, no part of this documentation may be reproduced, stored in or introduced into a retrieval system, or transmitted in any form or by any means, or for any purpose, without the express written permission of Datalogic S.p.A. and/or its affiliates.

Datalogic and the Datalogic logo are registered trademarks of Datalogic S.p.A. in many countries, including the U.S.A. and the E.U.

Genius, PackTrack, ACR, ASTRA, CD SQUARE and ID-NET are trademarks of Datalogic S.p.A. and/or its affiliates. All other trademarks and brands are property of their respective owners.

Datalogic shall not be liable for technical or editorial errors or omissions contained herein, nor for incidental or consequential damages resulting from the use of this material.

07/07/17

CONTENTS

REFERENCES vi
Reference Documentation vi
Support Through The Website vi
Patents vi

COMPLIANCE vii
Electrical Safety vii
Laser Safety vii
Power Supply viii
Line Fuse Replacement (VAC Models only) viii
CE Compliance ix
FCC Compliance ix
EAC Compliance ix
Bureau of Indian Standard (BIS) ix

GENERAL VIEW x

GUIDE TO INSTALLATION xiii
Point-to-Point Installation xiii
Master/Slave Lonworks Installation xiv

1 INTRODUCTION 1
1.1 Product Description 1
1.2 Applications 1
1.3 Model Description 3
1.4 Indicators 3
1.5 Keypad and Display 4
1.5.1 Internal Net 4
1.5.2 Test Mode 5
1.5.3 PackTrack (Auto) 5
1.6 Auto PackTrack™ Calibration for Reading Station Using Scanner Menu 6
1.6.1 Auto PackTrack Conditions and Limits 6
1.6.2 Auto PackTrack Parameter Descriptions 7
1.6.3 Auto PackTrack Setup 8
1.7 Accessories 11

2 INSTALLATION 13
2.1 Package Contents 13
2.2 Mechanical Mounting 14
2.2.1 Mounting the Scanner 14

3 CBX ELECTRICAL CONNECTIONS 16
3.1 Power Supply 18
3.2 Main Serial Interface 19
3.2.1 RS232 Interface 20
3.2.2 RS485 Full-Duplex Interface 21
3.2.3 RS485 Half-Duplex Interface 22
3.3 Auxiliary RS232 Interface 24
3.4 Inputs 25
3.4.1 Code Verifier 29
3.5 Outputs 29

3.6 User Interface - Host 32

4 CUSTOM CABLE ELECTRICAL CONNECTIONS 33
4.1 Power Supply 34
4.2 Main Serial Interface 35
4.2.1 RS232 Interface 36
4.2.2 RS485 Full-Duplex Interface 37
4.2.3 RS485 Half-Duplex Interface 38
4.3 Auxiliary Interface 40
4.4 Inputs 40
4.4.1 Code Verifier 43
4.5 Outputs 43
4.6 User Interface 45

5 LONWORKS CONNECTIONS 46
5.1 Network Termination 47
5.2 Lonworks Interface 48

6 FIELDBUS CONNECTIONS 50
6.1 Ethernet Interface 50
6.2 Ethernet Interface (older models) 51
6.3 DeviceNet Interface 53
6.4 Profibus Interface 54

7 TYPICAL LAYOUTS 55
7.1 Local Lonworks Network 55
7.1.1 Small Synchronized Network 56
7.1.2 Large Synchronized Network 58
7.1.3 Redundant System 60
7.1.4 Multidata Network 62
7.1.5 Fieldbus Networks 63

8 SOFTWARE CONFIGURATION 65
8.1 Genius™ Installation 65
8.2 Guide to Rapid Configuration 65
8.2.1 Wizard for Quick Reader Setup 65
8.2.2 Genius™ Network Setup Through Master 68
8.2.3 Alternative Slave Address Assignment 73
8.3 Advanced Genius™ Configuration 73
8.3.1 Genius™ Shortcuts for Network Configuration 74
8.4 Parameter Default Values 76

9 READING FEATURES 81
9.1 Advanced Code Reconstruction (ACR™ 4) 81
9.1.1 Tilt Angle for Advanced Code Reconstruction 81
9.2 PackTrack™ 82
9.2.1 Auto PackTrack™ Calibration for Reading Station Using DLAPC 84
9.2.2 Manual PackTrack™ Calibration for DX8200A Scanner Using SPY 91
9.2.3 Overwriting PackTrack™ Calibration for DX8200A 94
9.3 Performance 96
9.3.1 Reading Conditions 97
9.4 Reading Diagrams 99

10 MAINTENANCE 103
10.1 Cleaning 103

10.2 External Memory Backup & Restore 103
10.3 Automatic Scanner Replacement (ASR) 103
10.3.1 ASR Network Configuration 104
10.3.2 Scanner Replacement Procedure 104

11 TROUBLESHOOTING 105

12 TECHNICAL FEATURES 108

A ALTERNATIVE LAYOUTS 110
Point-to-Point 110
ID-NET™ Gateway 112
Pass Through 113
RS232 Master/Slave 114
Multiplexer 116

GLOSSARY 117

INDEX 120

REFERENCES

REFERENCE DOCUMENTATION

The documentation related to the DX8200A management is listed below:

- CBX100/CBX500 Installation Manuals
- PWR series power supply unit Installation Manuals
- PWO power supply unit Installation Manual
- SC6000 Controller Reference Manual
- Document about the Ethernet connectivity
- ID-NET™ Fixed Baudrate Application Note
- Help On-Line in PDF format

SUPPORT THROUGH THE WEBSITE

Datalogic provides several services as well as technical support through its website. Log on to **www.datalogic.com** and click on the **SUPPORT** > **Unattended Scanning Systems** category link. From this page you can select your product model from the dropdown list which gives you access to:

- Downloads including Data Sheets, Manuals, Software & Utilities, and Drawings;
- Repair Program for On-Line Return Material Authorizations (RMAs) plus Repair Center contact information;
- Service Program containing details about Maintenance Agreements;
- Technical Support through email or phone.

PATENTS

See www.patents.datalogic.com for patent list.

This product is covered by one or more of the following patents:

Utility patents: EP0789315B1, EP0926615B1, EP0959426B9, EP1217571B1, JP4033958B2, JP4376353B2, US5992740, US6177979, US6347740, US6394352, US6443360, US6527184, US6629639, US6742710, US7161685

COMPLIANCE

ELECTRICAL SAFETY

This product conforms to the applicable requirements contained in the European Standard for electrical safety EN-60950 at the date of manufacture.

WARNING	***This symbol refers to operations that must be performed by qualified personnel only.*** *Example: opening the device.*

WARNING	***This symbol refers to operations where there is danger of electrical shock.*** *Before opening the device make sure the power cable is disconnected to avoid electric shock.*

LASER SAFETY

The following information is provided to comply with the rules imposed by international authorities and refers to the correct use of the DX8200A scanner.

Standard Regulations

This scanner utilizes up to 4 low-power laser diodes. Although staring directly at the laser beam momentarily causes no known biological damage, avoid staring at the beam as one would with any very strong light source, such as the sun.

Avoid that the laser beam hits the eye of an observer, even through reflective surfaces such as mirrors, etc.

This product conforms to the applicable requirements of both EN60825-1 and CDRH 21 CFR1040 at the date of manufacture. The reader is classified as a Class 2 laser product according to EN60825-1 regulations and as a Class II laser product according to CDRH regulations.

There is a safety device, which allows the laser to be switched on only if the motor is rotating above the threshold for its correct scanning speed.

WARNING	*Use of controls or adjustments or performance of procedures other than those specified herein may result in exposure to hazardous visible laser light.*

The laser light is visible to the human eye and is emitted from the window on the side of the scanner (Figure A).

Warning labels indicating exposure to laser light and the device classification are applied onto the body of the scanner (Figure A):

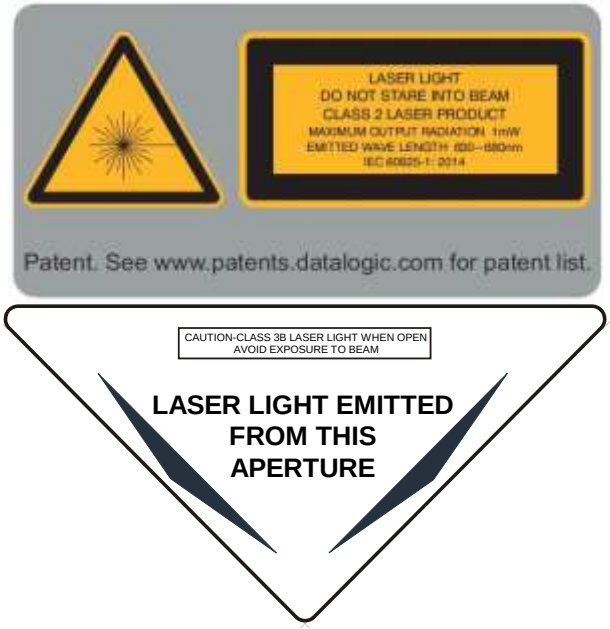

Warning and Device Class Labels

Device Identification Label

Disconnect the power supply when opening the device during maintenance or installation to avoid exposure to hazardous laser light.

The laser diodes used in this device are classified as Class 3B laser products according to EN 60825-1 regulations and as Class IIIb laser products according to CDRH regulations. Any violation of the optic parts in particular can cause radiation up to the maximum level of the laser diode (30 mW at 630~680 nm).

POWER SUPPLY

This product is intended to be installed by Qualified Personnel only.

For DX8200A VDC models:

- This scanner is intended to be supplied by either a UL Listed power supply marked 'Class 2' or 'LPS', output rated 20 - 30 V dc, minimum 1.5 A or by a UL Listed computer with LPS outputs.
- This scanner must be supplied by a Class II Power Supply Unit conforming to the EN 60950 safety regulation.

LINE FUSE REPLACEMENT (VAC MODELS ONLY)

CAUTION

Caution – double pole/neutral fusing.

For continued protection against risk of fire, replace with same type and rating of fuse (250V, 3.15 A).

CE COMPLIANCE

CE marking states the compliance of the product with essential requirements listed in the applicable European directive. Since the directives and applicable standards are subject to continuous updates, and since Datalogic promptly adopts these updates, therefore the EU declaration of conformity is a living document. The EU declaration of conformity is available for competent authorities and customers through Datalogic commercial reference contacts. Since April 20th, 2016 the main European directives applicable to Datalogic products require inclusion of an adequate analysis and assessment of the risk(s). This evaluation was carried out in relation to the applicable points of the standards listed in the Declaration of Conformity. Datalogic products are mainly designed for integration purposes into more complex systems. For this reason it is under the responsibility of the system integrator to do a new risk assessment regarding the final installation.

Warning: This is a Class A product. In a domestic environment this product may cause radio interference in which case the user may be required to take adequate measures.

FCC COMPLIANCE

Modifications or changes to this equipment without the expressed written approval of Datalogic could void the authority to use the equipment.

This device complies with PART 15 of the FCC Rules. Operation is subject to the following two conditions: (1) This device may not cause harmful interference, and (2) this device must accept any interference received, including interference which may cause undesired operation.

This equipment has been tested and found to comply with the limits for a Class A digital device, pursuant to part 15 of the FCC Rules. These limits are designed to provide reasonable protection against harmful interference when the equipment is operated in a commercial environment. This equipment generates, uses, and can radiate radio frequency energy and, if not installed and used in accordance with the instruction manual, may cause harmful interference to radio communications. Operation of this equipment in a residential area is likely to cause harmful interference in which case the user will be required to correct the interference at his own expense.

EAC COMPLIANCE

Customs Union:
The CU Conformity certification has been achieved; this allows the Product to bear the Eurasian mark of conformity.

BUREAU OF INDIAN STANDARD (BIS)

Self Declaration – Conforming to IS 13252 (Part 1):2010, R-41009288.

GENERAL VIEW

DX8200A

Figure A - DX8200A – Reading Windows Side

1 Laser Beam Output Windows
2 Mounting Slots
3 Laser Safety Label
4 Mounting Reference Label

Figure B - DX8200A Display and Keypad Side

1 Connector Panel
2 Service Access Cap
3 Product Label
4 Display and Keypad Panel

Figure C – Display and Keypad Panel

1. Programming Keypad
2. Power On LED (Green)
3. Phase On LED (Yellow)
4. Encoder LED (Yellow)
5. TX Data LED (Green)
6. Network LED (Red)
7. LCD Display

Figure D – Connector Panel for Standard Models

1. Lonworks 17-pin male connector
2. Lonworks 17-pin female connector
3. Serial interface and I/O 26-pin connector

Figure E – Connector Panel for Ethernet Models

1. Lonworks 17-pin male connector
2. Lonworks 17-pin female connector
3. Serial interface and I/O 26-pin connector
4. Ethernet M12 4-pin female connector

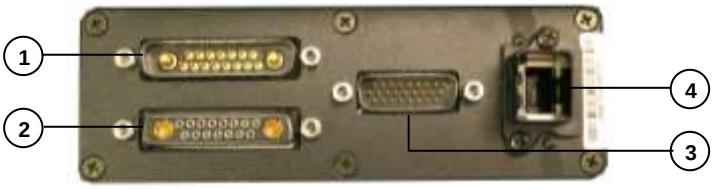

Figure F – Connector Panel for (older) Ethernet Models

1. Lonworks 17-pin male connector
2. Lonworks 17-pin female connector
3. Serial interface and I/O 26-pin connector
4. Harting RJ industrial connector

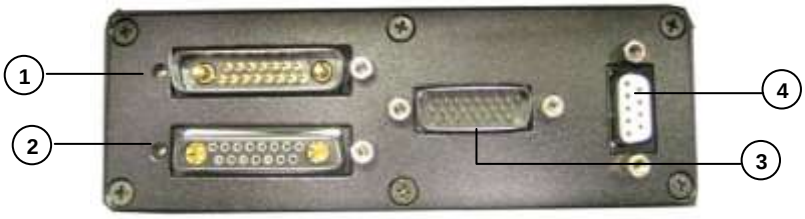

Figure G – Connector Panel for Profibus Models

1. Lonworks 17-pin male connector
2. Lonworks 17-pin female connector
3. Serial interface and I/O 26-pin connector
4. Profibus 9-pin female connector

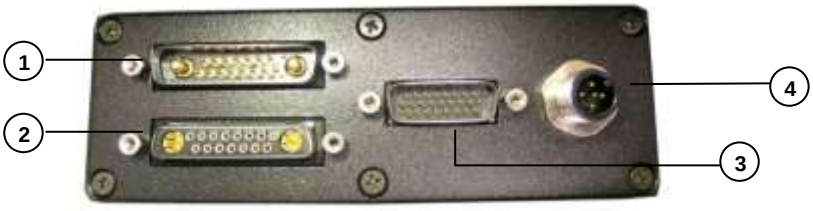

Figure H – Connector Panel for DeviceNet Models

1. Lonworks 17-pin male connector
2. Lonworks 17-pin female connector
3. Serial interface and I/O 26-pin connector
4. DeviceNet 5-pin male connector

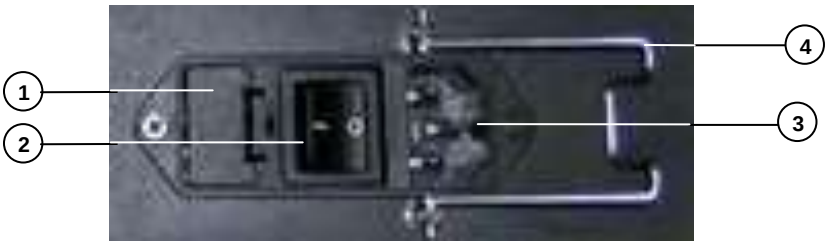

Figure I –Input Power Module (VAC Models only)

1. Line Fuse
2. Line Switch
3. Power Inlet
4. Cord Retaining Clamp

GUIDE TO INSTALLATION

POINT-TO-POINT INSTALLATION

The following can be used as a checklist to verify all the necessary steps to complete installation of the DX8200A scanner.

1) Read all information in the section “Safety Regulations” at the beginning of this manual.

2) Correctly mount the scanner according to the information in par. 2.2.1 and position it at the correct reading distance as shown in par. 9.4.

3) Make electrical connections to your DX8200A scanner by:

   a) Connecting the DX8200A scanner to the CBX100/CBX500 by means of one of the CAB-F0x cables provided as accessory (see par. 1.7).

   b) Providing correct and complete system cabling through the CBX100/CBX500 according to the signals necessary for the layout of your application (PS, Encoder, inputs, outputs).

      - Cabling: Power, Interface, Inputs, Outputs, etc. For further details, see chapter 3 (chapter 4 for custom cabling).
      - Alternative Layouts: Point-to-Point, Pass Through, RS232 Master/Slave, Multiplexer. See appendix A for layout references.

4) Configure the DX8200A scanner by installing and running the Genius™ configuration program from the CD-ROM provided. See chapter 8 and the Help On-Line for details. The main steps are:

   - Select the codes to be read
   - Set-up the communication parameters
   - When PackTrack™ is required, set the PS Offset and Position parameters
   - Define data formatting parameters

NOTE	*Fine tuning of the scanner position for barcode reading can be accomplished by performing a test through the SPY configuration tool in Genius™.*

5) Exit the configuration program and run your application.

The installation is now complete.

MASTER/SLAVE LONWORKS INSTALLATION

The following can be used as a checklist to verify all the steps necessary to complete installation of the DX8200A scanner in a Master/Slave Lonworks network.

1) Read all information in the section “Safety Regulations” at the beginning of this manual.

2) Correctly mount the scanner according to the information in par. 2.2.1 and position it at the correct reading distance as shown in par. 9.4.

3) Make electrical connections to your DX8200A scanner by:
   a) Connecting the DX8200A Master scanner to the CBX100/CBX500 by means of one of the CAB-F0x cables provided as accessory (see par. 1.7).
   b) Correctly terminating the DX8200A Master reader according to the information given in par. 5.1 and par. 7.1.
   c) Completing the system wiring adding as many slave scanners as required by your system layout (refer to par. 7.1).
   d) Correctly providing bus return to the last DX8200A Slave reader of the network according to the information given in par. 5.1 and par. 7.1.

4) Install and run the Genius™ configuration program from the CD-ROM provided. Configure the Local Lonworks Network using one of the procedures given below:
   - Configure the entire network through the Master as described in par. 8.2.2;
   - Configure the Master as described in par. 8.2.2 and locally define each slave scanner address as described in par. 8.2.3.
   - Define each scanner, master and slaves (with their addresses), by using the scanner keypad according to the information given in par. 1.5.1.

5) Configure the Master scanner through the Genius™ program. The main steps are:
   - Select the codes to be read
   - Set-up the communication parameters
   - When PackTrack™ is required, perform PackTrack™ calibration, see par. 9.2.2.
   - Define data formatting parameters

6) Configure each Slave scanner through the Master scanner using Genius™. The main steps are:
   - Select the codes to be read
   - When PackTrack™ is required, perform PackTrack™ calibration, see par. 9.2.2.

NOTE

Fine tuning of the scanner position for barcode reading can be accomplished by performing a test through the SPY configuration tool in Genius™.

7) Send the configuration to the Master.

8) Perform the External Memory Backup Procedure for system backup purposes (see par. 10.2). For backward compatibility you can perform the ASR Network Configuration procedure for system backup purposes (see par. 10.3.1).

9) Exit the configuration program and run your application.

The installation is now complete.

1 INTRODUCTION

1.1 PRODUCT DESCRIPTION

The DX8200A scanner is a barcode reader complete with decoder designed to provide an innovative and high performance solution in omnidirectional reading applications by combining the following advanced technologies with Datalogic solid experience in the material handling sector.

Some of the main features of DX8200A are listed below:

- scanning speed 1000 scans/sec. (500 scans for each line).
- reads all popular codes.
- supply voltage from 20 to 30 Vdc for Vdc models.
- supply voltage from 110 to 240 Vac for Vac models.
- test mode to verify the reading features and exact positioning of the scanner without the need for external tools.
- programmable in several different operating modes to suit the most various barcode reading system requirements.
- light source: solid state laser diodes; the light emitted has a wave length between 630~680 nm. For laser safety precautions refer to the “Compliance” section at the beginning of this manual.

1.2 APPLICATIONS

The DX8200A barcode reader is specifically designed for industrial applications and for all cases requiring high reading performance such as:

- omni-directional reading
- code reconstruction
- reading of codes covered by plastic film
- reading of codes with a wide depth of field
- reading of high resolution codes positioned at long distances from the reader
- code reading on fast moving objects

DX8200A is designed for both single-reader layouts and multi-reader layouts. For typical layouts see chapter 7 and appendix A.

Feature	Benefit
ACR™	• Advanced Code Reconstruction technology allows the reading of low aspect ratio labels placed anywhere on a parcel and enhances the readability of poorly printed or damaged codes.
CD SQUARE™	• CD SQUARE™ provides useful information on label position and object shape elaborated during the barcode reading phase. This innovative technology identifies the area in which the code is located and measures the code distance from the scanner.
PACKTRACK™	• PackTrack™ is a Datalogic patented parcel tracking system which improves the reading features in omnidirectional stations. In particular, PackTrack™ manages 6-sided reading systems when it is impossible to detect the real position of the code on the parcel, thus overcoming the need for external accessories essential in traditional tracking systems.
ASTRA™	• Automatically SwiTched Reading Area™ is the new Datalogic technology based on a multi-laser architecture and a fixed mounted optic system which concentrates the multiple laser emissions in a single laser beam. As each laser emitter is focused on a specific range of the reading area, a sophisticated electronic controller selects the best focused laser emitter with respect to the code to read. This allows the reading of medium-high density codes in a large reading area on very fast conveyors.
Flexibility	• The high frequency laser diode modulation system guarantees complete immunity to ambient light and allows installation of the DX8200A in any working area.
Reading parcels on conveyors	• As a result of the ASTRA™ multiple laser technology, DX8200A gives a great real time DOF even on high speed conveyors. Furthermore, DX8200A implements the Packtrack™ functionality which leads to an increase of the plant production as a result of the augmented system throughput.
Master working as a Multiplexer on high speed Lonworks bus	• Great competitiveness of the offer, since the cost of an external multiplexer is saved; • High data transfer on an industrial, reliable bus running at 1.25 Mbit/sec.
Genius™ Configurator SW	• Reduced learning time, with an easy wizard approach; • Multilanguage platform; • All the configuration parameters stored into the scanner; • Not dependent on the Physical interface.

Feature	Benefit
Energy Saving	• A software parameter group which allows management of the energy saving feature. In particular, it allows turning on/off the motor and laser of all network scanners according to the selected digital input, encoder, or communication channel. • The time required to restart the system is less than 1 minute independently from the number of scanners connected. • It is suggested to use this parameter for example when the conveyor is stopped for a lengthy period.

1.3 MODEL DESCRIPTION

The DX8200A scanner is available in versions that differ depending on the interface connection, the optical resolution and on the input power type:

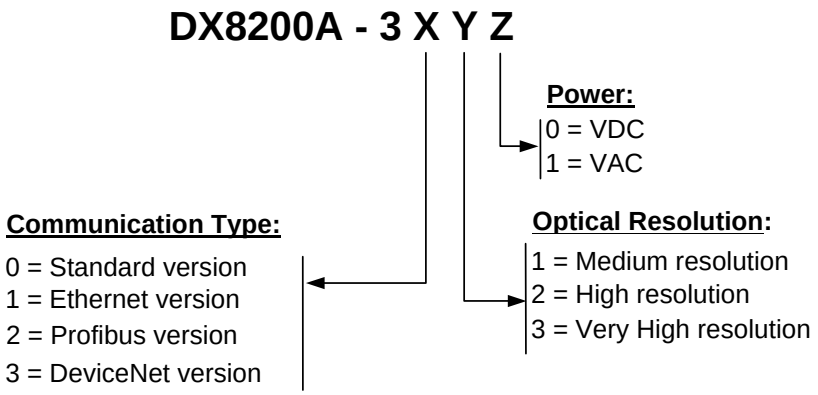

1.4 INDICATORS

The DX8200A has five LEDs on the rear panel. The indicators have the following functions:

POWER ON	(green)	Indicates the scanner is turned on.
PHASE ON	(yellow)	Indicates the external presence sensor is active.
ENCODER	(yellow)	Indicates the external encoder signal is active.
TX DATA	(green)	Indicates data transmission both on the main and on the auxiliary interface.
NETWORK	(red)	Indicates the Lonworks network is functioning correctly. This LED is normally ON.

1.5 KEYPAD AND DISPLAY

The DX8200A keypad allows entering a menu for selection of one of the following functions:

- Welcome: shows the current software release and operating mode;
- Autolearn: starts the procedure making it possible to obtain an automatic, accurate and fast configuration of DX8200A without the necessity of directly checking/modifying the relevant parameters;
- Internal Net: defines scanner function within the network (see below);
- Ethernet Mode: allows setting the scanner IP address to be used within the network;
- LCD Contrast: sets the LCD contrast;
- Bus: allows setting the scanner address (value range 0-125) to be used in a Profibus network;
- Test Mode: allows verifying the scanner reading position and features (see below).

The same settings may be performed by using the Genius™ program (see chapter 8 for details).

1.5.1 Internal Net

This submenu can be used as an alternative to configuration through Genius™, to assign the DX8200A scanner within a master/slave network.

It allows defining the scanner function (slave/master) within the network and, if configured as Slave, its address.

To enter the Internal Net submenu and configure the scanner follow the given procedure:

1) Press and hold both the ▲ (up arrow) and ▼ (down arrow) keys for about 2 seconds to enter the Main menu;
2) Use the ▲ (up arrow) or ▼ (down arrow) key to select the “Internal Net” item, then press the ENT (enter) key to confirm;
3) Use the ▲ (up arrow) or ▼ (down arrow) key to select the “LonWAddrSel”” item, then press the ENT (enter) key to confirm;
4) Use the ▲ (up arrow) or ▼ (down arrow) key to select your scanner function among “Master”, “Slave n”, “Slave jolly”, “Disabled”; then, press the ENT (enter) key to confirm;
5) Use the ▲ (up arrow) or ▼ (down arrow) key to select the “Exit” item, then press the ENT (enter) key to confirm. Repeat this step again to exit the Main Menu and return to the scanner current operating mode.

1.5.2 Test Mode

Test Mode is particularly advised during the installation phase, since it causes the reader to be continuously activated allowing verification of its reading features and its reading position with respect to the barcode.

To enter the Test Mode submenu and configure the scanner follow the given procedure:

1) Press and hold both the ▲ (up arrow) and ▼ (down arrow) keys for about 2 seconds to enter the Main menu.
2) Use the ▲ (up arrow) or ▼ (down arrow) key to select the “Test Mode” item, then press the ENT (enter) key to confirm. The reader enters Test Mode.
3) Press the ▲ (up arrow) key to exit the Test Mode.
4) Use the ▲ (up arrow) and ▼ (down arrow) key to select the “Exit” item, then press the ENT (enter) key to confirm. The scanner exits the Main Menu and returns to its current operating mode.

1.5.3 PackTrack (Auto)

This submenu can be used to execute the Automatic PackTrack Calibration procedure for the Reading Station when the Master scanner is in PackTrack or Continuous Operating Modes. Performing this procedure through the Keypad/Display Menu is an alternative to Automatic PackTrack Calibration through the DLAPC tool in Genius™, see Help On-Line.

NOTE

This scanner must first be configured as Master of the master/slave network (see par. 1.5.1, "Internal Net" procedure).

To enter the PackTrack submenu and configure the scanner follow the given procedure:

1) Read par. 1.6.1 regarding Auto PackTrack Conditions and Limits.
2) Press and hold both the ▲ (up arrow) and ▼ (down arrow) keys for about 2 seconds to enter the Main menu;
3) Use the ▲ (up arrow) or ▼ (down arrow) key to select the “PackTrack” item, then press the ENT (enter) key to confirm;
4) Use the ▲ (up arrow) or ▼ (down arrow) key and the ENT (enter) key to select the items in the following table and set them according to your application. See par. 1.6.2 for details;
5) After all items are set, use the ▲ (up arrow) or ▼ (down arrow) key to select “Start”; then, press the ENT (enter) key to confirm. Follow the Procedure described in par. 1.6.3.

1.6 AUTO PACKTRACK™ CALIBRATION FOR READING STATION USING SCANNER MENU

1.6.1 Auto PackTrack Conditions and Limits

The Conditions and Limits for Auto PackTrack Calibration are summarized here for convenience and are also integrated into the following procedure descriptions:

- The following scanners are supported by Auto PackTrack Calibration: DS6400 (*see note below), DX6400 (*see note below), DS8100A, DX8200A.
- Before performing the Auto PackTrack Calibration procedure, if a system reset or power reset is performed, wait for all the scanners to be available (up to 60 sec.) before proceeding.
- Operating Mode of the Master must be either PackTrack or Continuous.
- Code 128 codes must be enabled on the Master with Label Length set to variable.
- If the system Presence Sensor and Encoder are used, the correct Encoder Step value must be set on the Master and the Presence Sensor must be connected to the CBX100/500 Input 1.
- If instead the PPA-8000 Photocell Array is used, it must be connected to the CBX100/500 I1 and I2 inputs, **the following parameters must be disabled on the Master**: Physical Encoder for PackTrack or Use Encoder for Continuous, **and the Encoder, if present, must be physically disconnected**.
- DX scanners which are calibrated automatically cannot be automatically replaced by DX scanners with a previous sw version (earlier than 6.80). You must either update the old scanner software prior to substitution, or complete the calibration manually, after installation, by setting the PSOffset and Direction parameters.

NOTE	*The autofocus feature of DS6400 and DX6400 scanners makes Auto PackTrack Calibration difficult, therefore to assure that the procedure can correctly calibrate these scanners, it is necessary to set a fixed focus value which allows the scanner to read all the label positions useful for its calibration.*

1.6.2 Auto PackTrack Parameter Descriptions

Menu	Branch	Default	Note
PackTrack			Automatic Packtrack Calibration procedure for the Reading Station
	Version	**2**	Select the version number of the PCT-8000 pack
	Cal Type	**XYZ**	XYZ calibration is forced.
	X Cal	**Absolute**	Absolute X position is forced.
	X Offset	**-**	Set the zero point of the X-axis (4 digits in mm)
	Sensor	**0**	Set the distance (3 digits in mm) between the photocells in the photocell array. If the system Presence Sensor and Encoder are used, set this parameter to 0.
	Start		Start the Auto PackTrack procedure
	Z Offset	**0**	Set a correction factor for the pack height (3 digits in mm)

The Auto PackTrack procedure when run from the scanner keypad, requires a system reset before the calibration is recognized. See the Auto PackTrack Setup procedure.

Version: the version of the PCT-8000 being used for calibration. This value can be read from the barcode labels on the PCT-8000. Each label has the value *vnnn* where *v* is the version number.

Cal Type: the XYZ calibration is forced. The coordinates for the three axes are calibrated.

NOTE

For Oscillating Mirror models the scan line must be parallel to the conveyor direction and only the Y calibration will be performed, (the X and Z axes will automatically be set to zero).

X Cal: the Absolute X position is forced. The X coordinate for all scanners is relative to the precise point (PackTrack Reference Point X, Y, Z = 0).

X Offset: the X Offset moves the Absolute X coordinate (X, Y, Z= 0) for all the scanners to the desired point along the X axis which will be measured in step 7 in par. 1.6.3.

Sensor: calibration will be performed either using the system Presence Sensor and Encoder (most cases), or the PPA-8000 Photocell Array, for systems where the Presence Sensor or Encoder are not present (typically Tilt-Tray or Cross-Belt applications).

NOTE

*The Auto PackTrack procedure **requires** using the PPA-8000 Photocell Array for all systems where either the Presence Sensor or the Encoder are absent (including Continuous Operating Mode and Cargoscan applications).*

If using the Presence Sensor and Encoder, the presence sensor must be connected to the CBX100/500 Input 1 and in this menu **Sensor** is set to **0**. The scanners Encoder Step parameter must also be set correctly.

If using the PPA-8000, in this menu you must set **Sensor** (the Photocell distance) to **165 mm**. The Photocell Array must be connected to the CBX100/500 I1 and I2 inputs (see the relative installation manual), **and the Encoder, if present, must be disconnected**.

Z Offset (if necessary): for packs that are elevated above the conveyor surface (for example on tilt trays), this parameter sets an offset for the height of a pack so that Z = 0 corresponds to the bottom of the pack.

1.6.3 Auto PackTrack Setup

After setting the initial parameters in the PackTrack menu the Auto PackTrack setup procedure can be started:

1. Press the ENT (enter) key at the *Start* item in the *PackTrack* menu.

2. Press the ENT (enter) key to confirm the action. The Master scanner sends the message to the Slave scanners and the Display shows the *Wait* message.

   After receiving the answer from all of the Slaves, the Master scanner shows the status of each node (of each scanner of the cluster) as in the example below.

I	**I**	**I**	**U**	**I**	**I**	**I**	**I**
A	**B**	**C**	**D**	**E**	**F**	**G**	**H**

   The slave scanners are listed on the second line as letters (**A**, **B**, **C**, etc.).
   On the first line above each scanner position a symbol indicates the scanner status according to the following convention:

U	cannot be calibrated	cannot be calibrated because not supported by scanner software version
U	can be calibrated	can be calibrated but the calibration procedure fails either barcode reading or verification
L	Lost	scanner stops responding during the procedure
I	Initial State	scanner ready to be calibrated
N	Not Verified	scanner calibrated but not verified
C	Calibrated	scanner is calibrated

NOTE

If the network is made up of more than 16 slaves, you can use the ▲ (up arrow) key to toggle between the lines.

3. At this point the Master scanner display allows to *Continue* or to *Stop* the procedure. You can switch between the previous display windows using the ▲ (up arrow) key.

   If there are any nodes that show as *U* or *L*, then you should *Stop* the procedure and correct the problem.

   If the nodes respond with *I*, *N*, or *C* then you can *Continue* with the procedure.

4. Press the ENT (enter) key to *Continue* the procedure. The Master scanner shows message *Let the parcel run*.

5. Place the PCT-8000 onto the moving conveyor, before the PS Line (reference point) and parallel to a conveyor edge (i.e. right-hand edge) with its arrow in the same direction as the conveyor movement. Let it pass through the reading station. The Master scanner shows the *Wait* message.

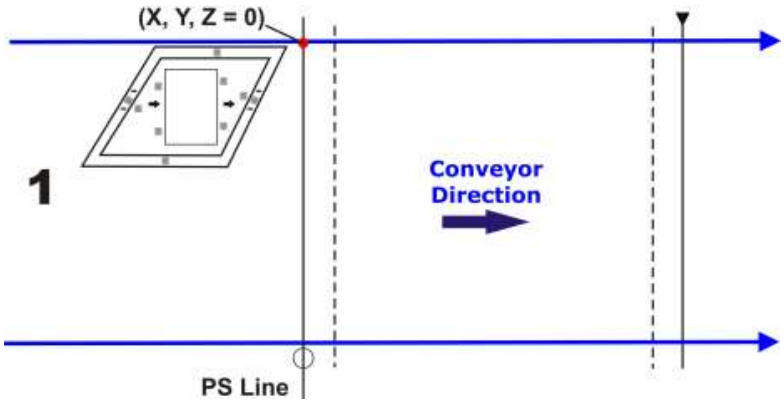

Figure 1 - PCT-8000 First Run

After elaborating the passage of the parcel, the Master scanner again shows the status of each node (of each scanner of the cluster) and then the *Continue* or *Stop* screen.

6. Repeat steps 3 - 5 changing the PCT-8000 X position (i.e. always before the PS Line (reference point) and parallel to a conveyor edge but changing to the left-hand edge and/or to the center of the conveyor), until the procedure terminates.

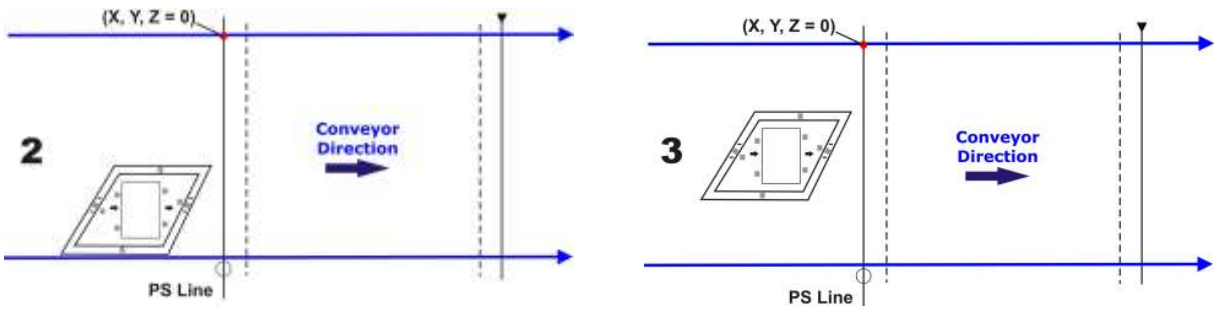

Figure 2 - PCT-8000 Second and Third Runs

Typically 3 passes are necessary.

7. At the last step in the sequence the display prompts to place a barcode label **centered** onto the physical X position (X Offset) on the conveyor. Press the ENT (enter) key to Continue. You have 2 minutes to read the code before the procedure ends automatically. Be careful that the barcode is not accidentally read in the act of placing it at the desired X Offset position, and assure that **it is read by only one scanner** (see the figure below). After placing the barcode label on the X coordinate, you may have to pass your hand or other opaque object over it to end this step.

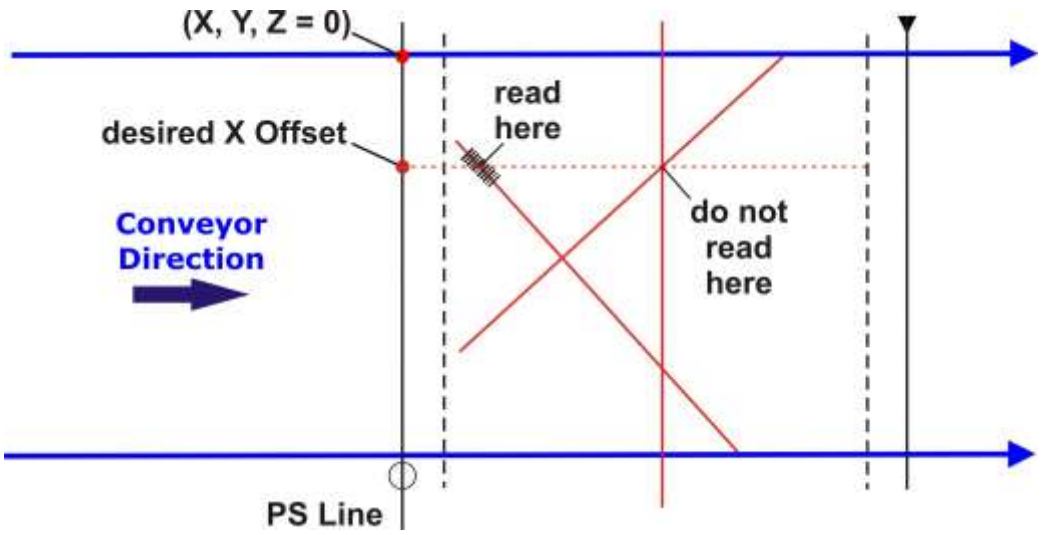

Figure 3 - X Offset Selection

Pressing the ▼ (down arrow) key at any point will terminate the procedure without saving the Absolute X position alignment.

NOTE	*Before resetting the Master scanner, if desired, you can download the Auto PackTrack Report file from the Master scanner RAM by connecting it to Genius™ and using the Tools>File transfer… menu. See Help On-Line.*

8. Manually reset the Master scanner.

1.7 ACCESSORIES

The following accessories are available on request for DX8200A:

Name	Description	Part Number
Power Supplies		
PWR-120	J-box power unit 110/230 VAC 24 V 120 W	93ACC1530
PWR-240	J-box power unit 110/230 VAC 24 V 240 W	93ACC1070
PWR-480A	J-box power unit 110/230 VAC 24 V 480 W	93ACC1850
Cables and Terminators		
BTK-8100	Bus terminator kit (5 pcs)	93ACC1090
BTK-8102	Double terminator kit (2 pcs)	93A051287
CAB-8100	10 wire shielded cable D 9.5 mm – 50 m	93ACC1120
CAB-8101	17-pin scanner/scanner connection cable 1.2 m	93A051020
CAB-8102	17-pin scanner/scanner connection cable 2.5 m	93A051030
CAB-8105	17-pin scanner/scanner connection cable 5 m	93A051040
CAB-8305	Power and bus return cable (last Slave) 5 m	93A051268
CAB-8310	Power and bus return cable (last Slave) 10 m	93A051336
CAB-8402	No power cable 2.5 m	93ACC1758
CAB-8405	No power cable 5 m	93ACC1759
CAB-F01	6K-8K FBUS cable to CBX 1 m	93A051355
CAB-F02	6K-8K FBUS cable to CBX 2 m	93A051356
CAB-F05	6K-8K FBUS cable to CBX 5 m	93A051357
CAB-6502	Fam 6K-8K cross cable 2.5 m	93A051288
CAB-6505	Fam 6K-8K cross cable 5 m	93A051289
CAB-8605	Power and Lonworks termination cable (Master) 5 m	93A051290
CAB-DX8000	Power cable DX8200A VAC (EU)	93A051333
CAB-DX8001	Power cable DX8200A VAC (US)	93A051334
CAB-ETH-M01	M12-IP67 Ethernet Cable (1 m)	93A051346
CAB-ETH-M03	M12-IP67 Ethernet Cable (3 m)	93A051347
CAB-ETH-M05	M12-IP67 Ethernet Cable (5 m)	93A051348
CBL-1534-0.2	Ethernet Adapter Cable (M12 4-pin male to RJ45 female)	93A050057
Software Management		
Datalogic WebSentinel-005	Supervisor (up to 5 arrays)	93A101014
Datalogic WebSentinel-010	Supervisor (up to 10 arrays)	93A101015
Datalogic WebSentinel-020	Supervisor (up to 20 arrays)	93A101016
Datalogic WebSentinel-032	Supervisor (up to 32 arrays)	93A101017
Datalogic WebSentinel-064	Supervisor (up to 64 arrays)	93A101018
Datalogic WebSentinel-128	Supervisor (up to 128 arrays)	93A101019
Datalogic WebSentinel-256	Supervisor (up to 256 arrays)	93A101020

Name	Description	Part Number
*** Connection Boxes**		
CBX100	Compact Connection Box	93A301067
CBX500	Modular Connection Box	93A301068
CBX800	Gateway Connection Box	93A301077
BM100	Backup Module	93ACC1808
BA100	DIN Rail Adapters for CBX	93ACC1821
BA200	Bosch Adapters for CBX	93ACC1822
BA900	Two Cable Glands Panel	93ACC1847
Sensors		
MEP-593	Photocell kit – PNP (PH-1)	93ACC1791
MEP-543	Photocell kit – NPN	93ACC1728
OEK-2	Optical encoder (10 m cable + spring)	93ACC1770
OEK-1	Optical encoder kit + 10 m cable	93ACC1600
Brackets		
UPT-80	DX8200A – DX8200 Adapter	93ACC1757
FS-1	Frame shaper (8 pcs)	93ACC1750
Miscellaneous		
PLL-8000	Optocoupled PLL device	93ACC1280

* DX8200A application software does not support any of the CBX500 Host Interface Module accessories nor the BM150 Display accessory. Use the CBX800 Gateway for Host Interface Applications, (Fieldbus and non Fieldbus).

2 INSTALLATION

To install the system follow the given procedure:

1. Select the mounting location for DX8200A;
2. Mount the DX8200A scanner;
3. Position the scanner with respect to the barcode;
4. Proceed with system electrical connection;
5. Install the Genius™ program on the PC and configure the scanner.

WARNING	*When installing several scanners, take care to position them correctly so that no laser beam enters the reading window perpendicularly and at the same level of the output beam of the other scanners. This condition could occur more frequently for side mounted applications. If these precautions are not followed, it may occur that the laser of the blinded scanner starts blinking due to an internal circuit which temporarily turns the laser off when detecting a power anomaly. To resolve this problem, it is sufficient to slightly change the inclination and position of one of the two scanners involved.*

NOTE	*Refer to the Reference Documentation for details on connecting your DX8200A reader to other devices in the system (i.e. CBX100 etc.).*

2.1 PACKAGE CONTENTS

Verify that the DX8200A reader and all the parts supplied with the equipment are present and intact when opening the packaging; the list of parts includes:

- DX8200A reader
- Reference Point Stops with washers to aid mounting (2)
- Installation Quick Reference + barcode test chart
- DX8200A configuration CD-ROM

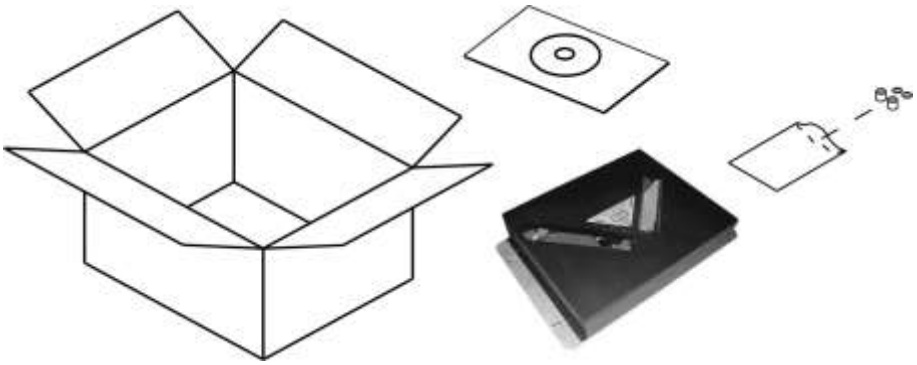

Figure 4 - DX8200A Package Contents

2.2 MECHANICAL MOUNTING

2.2.1 Mounting the Scanner

DX8200A can be installed to operate in any position. There are 4 slots (dia. 8.5 mm) on the sides of the scanner for mounting. The diagram below can be used for installation; refer to par. 9.4 for correct positioning of the scanner with respect to the reading zone and scanner orientation. See par. "Scanner Direction" for scanner direction relative to the conveyor.

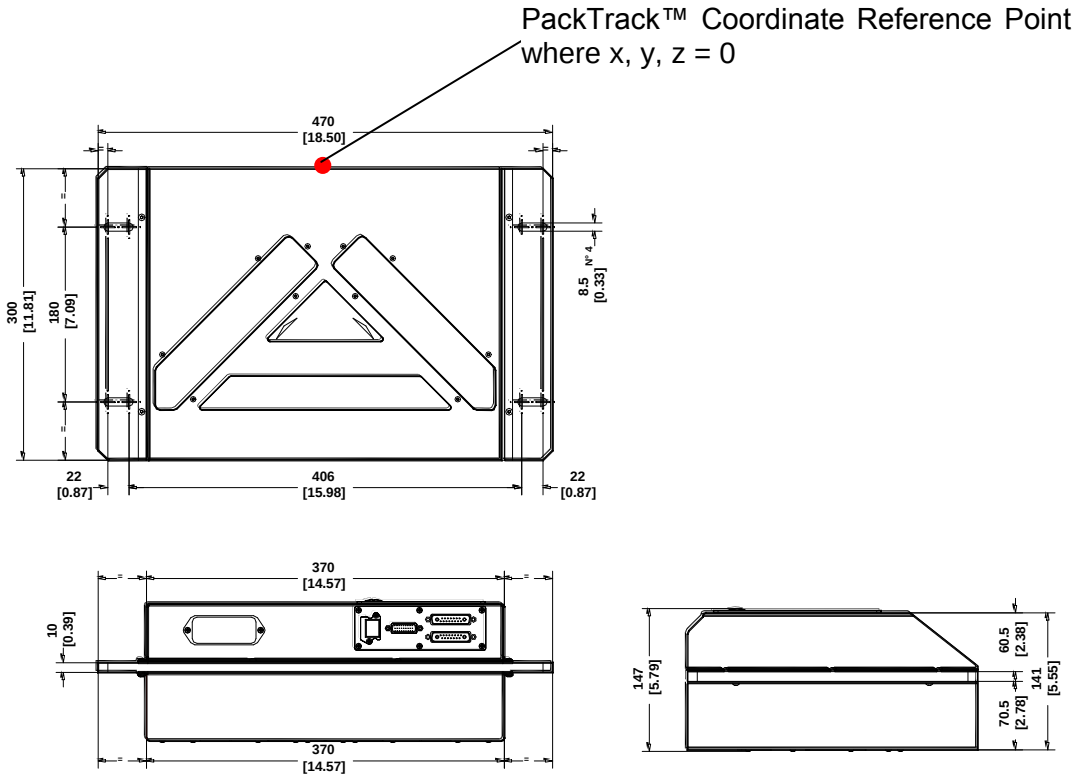

Figure 5- DX8200A Overall Dimensions

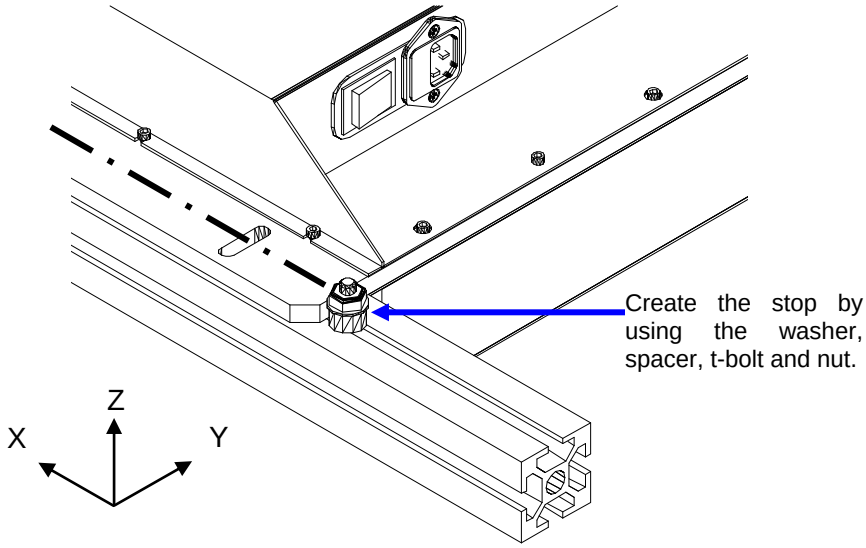

X-axis Reference Point Stops

The 2 washers and 2 spacers can be mounted to the Reading Station Frame using Bosch T-bolts and nuts to create 2 stops which can be used to facilitate DX8200A mounting and positioning.

- During initial mounting, affix the stops in approximation to the mounting position. The weight of the DX8200A can rest against this reference while the mounting bolts are being set. This avoids having to hold and maneuver the scanner (especially for vertical side mounted positions) while simultaneously affixing it to the frame.

- Once the scanner is correctly positioned for PackTrack, fix the stops against the scanner. The stops remain fixed to the station frame so that the scanner can be replaced without having to recalibrate the PackTrack coordinates. Referring to the figure above, the stop provides a reference point for the X-axis while the scanner should be centered on the frame to have a fixed reference for the Y-axis.

3 CBX ELECTRICAL CONNECTIONS

Each scanner model has the following connectors:

Scanner Model	Connectors
Standard	26-pin male serial interface and I/O connector 17-pin male Lonworks connector 17-pin female Lonworks connector
Ethernet	26-pin male serial interface and I/O connector 17-pin male Lonworks connector 17-pin female Lonworks connector M12 4-pin D-coded connector for Ethernet *
Profibus	26-pin male serial interface and I/O connector 17-pin male Lonworks connector 17-pin female Lonworks connector Profibus 9-pin female connector
DeviceNet	26-pin male serial interface and I/O connector 17-pin male Lonworks connector 17-pin female Lonworks connector DeviceNet 5-pin male connector

* older models have RJ45 Industrial modular connector

All DX8200A models can connect their 26-pin male D-sub connector for connection to the power supply, serial interface and input/output signals to a CBX connection box by using the dedicated cables (**CAB-F0x**).

We recommend making system connections through one of the CBX connection boxes since they offer the advantages of easy connection, easy device replacement and filtered reference signals.

NOTE

If you require direct wiring to the scanner the details of the connector pins and relative connections are indicated in Chaper 4.

For Lonworks network connections see chapters 5 and 7.

For Fieldbus connections see chapters 6 and 7.

For ID-NET™ Fixed Baudrate connections see the Application Note on the CD-ROM.

The table below gives the pinout of the CBX100/500 terminal block connectors. Use this pinout when the DX8200A reader is connected by means of the CBX100/500:

CBX100/500 Terminal Block Connectors				
Group	**Name**	**Function**		
Input Power	Vdc	Power Supply Input Voltage +		
	GND	Power Supply Input Voltage -		
	Earth	Protection Earth Ground		
External Trigger (PS) Input	+V	Power Source – External Trigger		
	I1A	External Trigger A (polarity insensitive) for PS		
	I1B	External Trigger B (polarity insensitive) for PS		
	-V	Power Reference – External Trigger		
Encoder or Generic Input	+V	Power Source – Inputs		
	I2A	Input 2A (polarity insensitive) for Encoder		
	I2B	Input 2B (polarity insensitive) for Encoder		
	-V	Power Reference – Inputs		
Outputs	+V	Power Source – Outputs		
	-V	Power Reference – Outputs		
	O1+	Output 1+		
	O1-	Output 1-		
	O2+	Output 2+		
	O2-	Output 2-		
Other I/O (CBX500 only)	O3A	Output 3A (polarity insensitive)		
	O3B	Output 3B (polarity insensitive)		
	+V	Power Source – Other I/O		
	I3A	Input 3A (polarity insensitive)		
	I4A	Input 4A (polarity insensitive)		
	-V	Power Reference – Other I/O		
	I34B	Input 3B and 4B (common) (polarity insensitive)		
	I34B	Input 3B and 4B (common) (polarity insensitive)		
Auxiliary Interface	TX	Auxiliary Interface TX		
	RX	Auxiliary Interface RX		
	SGND	Auxiliary Interface Reference		
ID-NET™	REF	Reserved		
	ID+	Reserved		
	ID-	Reserved		
Network	Shield	Network Cable Shield		
		RS232	**RS485FD**	**RS485HD**
Main Interface		TX	TX+	RTX+
		RTS	TX-	RTX-
		RX	*RX+	
		CTS	*RX-	
		SGND	SGND	SGND

***** Do not leave floating, see par. 3.2.2 for connection details.

CAUTION

Do not connect GND and SGND to different (external) ground references. GND and SGND are internally connected through filtering circuitry which can be permanently damaged if subjected to voltage drops over 0.8 Vdc.

CAUTION

DX8200A scanners do not support Host Interface Modules with the CBX500. Use the CBX800 Gateway for Host Interface Applications, (Fieldbus and non Fieldbus).

NOTE

To avoid electromagnetic interference when the scanner is connected to a CBX connection box, verify the jumper positions in the CBX as indicated in its Installation Manual.

3.1 POWER SUPPLY

Vdc models:
Power can be supplied to the scanner through the CBX100/500 spring clamp terminal pins as shown in Figure 6:

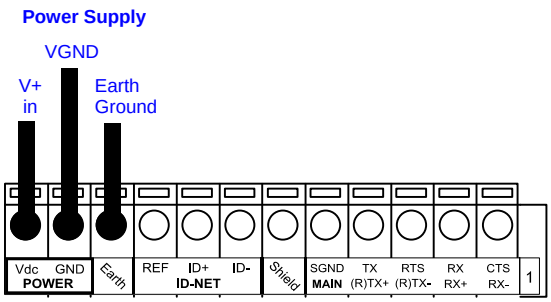

Figure 6 - Power Supply Connections

The power must be between 20 and 30 Vdc only. The max. power consumption is 30 W including startup current.

Several accessory power supplies are available to power the DX8200A Vdc models and reading station components. See par. 1.7.

A security system allows the laser to activate only once the motor has reached the correct rotational speed; consequently, the laser beam is generated after a slight delay from the power on of the scanner.

It is recommended to connect the device CHASSIS to earth ground (Earth) by setting the appropriate jumper in the CBX connection box. See the CBX Installation Manual for details.

Vac models:
The supply voltage for correct operation of the scanner must be between 110 and 240 VAC. The max. power consumption is 48 VA including startup current.

24 Vdc is generated and available on the 26-pin connector and can be used to power external devices through a correctly jumpered CBX100/CBX500, i.e. photocell, etc. **This voltage however cannot be used to propagate power for a Lonworks network**.

A security system allows the laser to activate only once the motor has reached the correct rotational speed; consequently, the laser beam is generated after a slight delay from the power on of the scanner.

3.2 MAIN SERIAL INTERFACE

The main serial interface is compatible with the following electrical standards and the relative signals are available on the CBX spring clamp terminal blocks:

RS232

RS485 full-duplex

RS485 half-duplex

The main interface type and the relative parameters (baud rate, data bits, etc.) can be set using the Genius™ utility program or the Genius™ based Host Mode Programming procedure. For more details refer to the section "Main Serial Port" in the Genius™ Help On Line.

3.2.1 RS232 Interface

The serial interface is used in this case for point-to-point connections; it handles communication with the host computer and allows both transmission of code data and the programming of the scanner. This is the default setting.

The following pins are used for RS232 interface connection:

CBX100/500	Function
TX	Transmit Data
RX	Receive Data
RTS	Request To Send
CTS	Clear To Send
SGND	Signal Ground

It is always advisable to use shielded cables. If the shield is tied to ground at the Host, then leave it floating at the CBX. If it is floating at the Host then tie it to Shield at the CBX. The overall maximum cable length must be less than 15 m (50 ft).

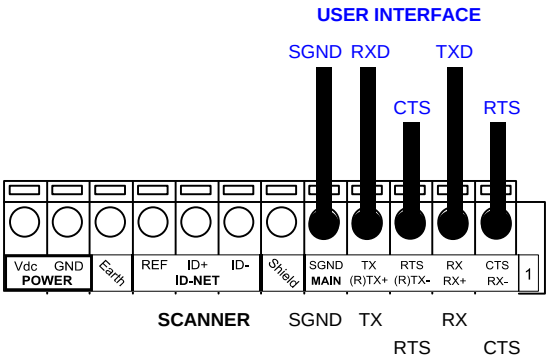

Figure 7 – RS232 Main Interface Connections Using Hardware Handshaking

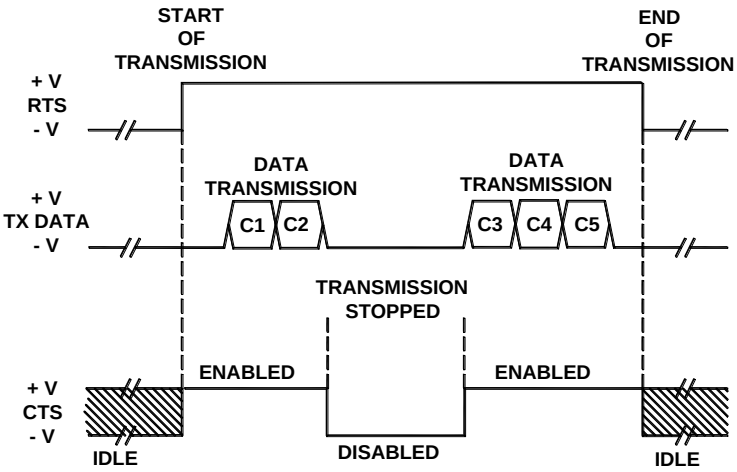

Figure 8 - RS232 Control Signals

The RTS and CTS signals control data transmission and synchronize the connected devices.

If the RTS/CTS handshaking protocol is enabled, the DX8200A activates the RTS output to indicate a message is to be transmitted. The receiving unit activates the CTS input to enable the transmission.

3.2.2 RS485 Full-Duplex Interface

The RS485 full-duplex (5 wires + shield) interface is used for non-polled communication protocols in point-to-point connections over longer distances (max 1200 m / 3940 ft) than those acceptable for RS232 communications or in electrically noisy environments.

If the shield is tied to ground at the Host, then leave it floating at the CBX. If it is floating at the Host then tie it to Shield at the CBX.

The CBX pinout follows:

CBX100/500	Function
TX+	RS485 Transmit Data +
RX+	RS485 Receive Data +
TX-	RS485 Transmit Data -
RX-	RS485 Receive Data -
SGND	Signal Ground

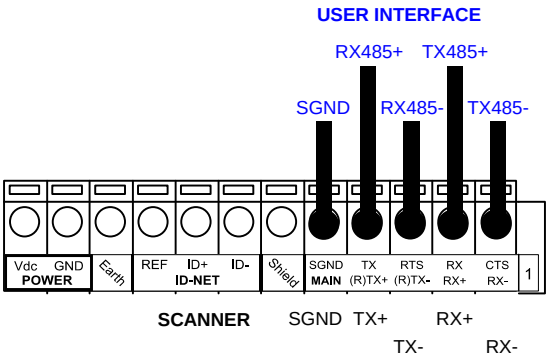

Figure 9 - RS485 Full-duplex Connections

NOTE

For applications that do not use RX485 signals, do not leave these lines floating but connect them to SGND as shown below.

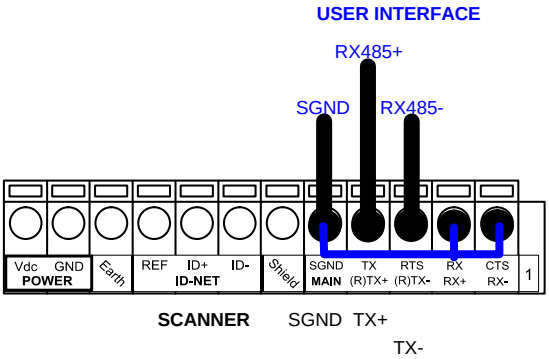

Figure 10 - RS485 Full-duplex Connections using Only TX Signals

3.2.3 RS485 Half-Duplex Interface

NOTE

This interface is provided for backward compatibility. We recommend using the more efficient Lonworks network for Master/Slave or Multiplexer layouts.

The RS485 half-duplex (3 wires + shield) interface is used for polled communication protocols.

It can be used for Multidrop connections with a Datalogic Multiplexer, (see par. "Multiplexer" in Appendix A) exploiting a proprietary protocol based on polled mode called MUX32 protocol, where a master device polls slave devices to collect data. The overall maximum cable length should not exceed 1200 m (3940 ft).

If the shield is tied to ground at the Host, then leave it floating at the CBX. If it is floating at the Host then tie it to Shield at the CBX.

CBX100/500	Function
RTX+	RS485 Receive/Transmit Data +
RTX-	RS485 Receive/Transmit Data -
SGND	Signal Ground

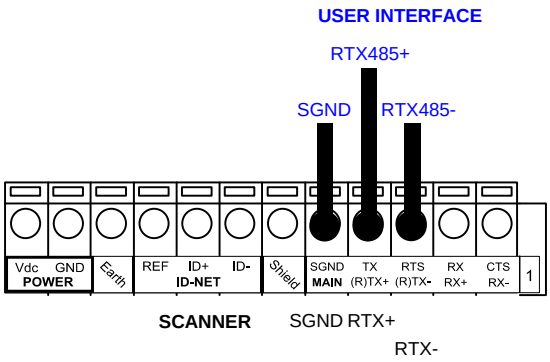

Figure 11 - RS485 Half-duplex Connections

This interface is forced by software when the protocol selected is MUX32 protocol.

In a Multiplexer layout, the Multidrop address must also be set via serial channel by the Genius™ utility or by the Host Programming Mode.

Figure 12 shows a multidrop configuration with DX8200A scanners connected to a Multiplexer.

CAUTION

This is an example of multidrop wiring. Consult the multiplexer manual for complete wiring instructions.

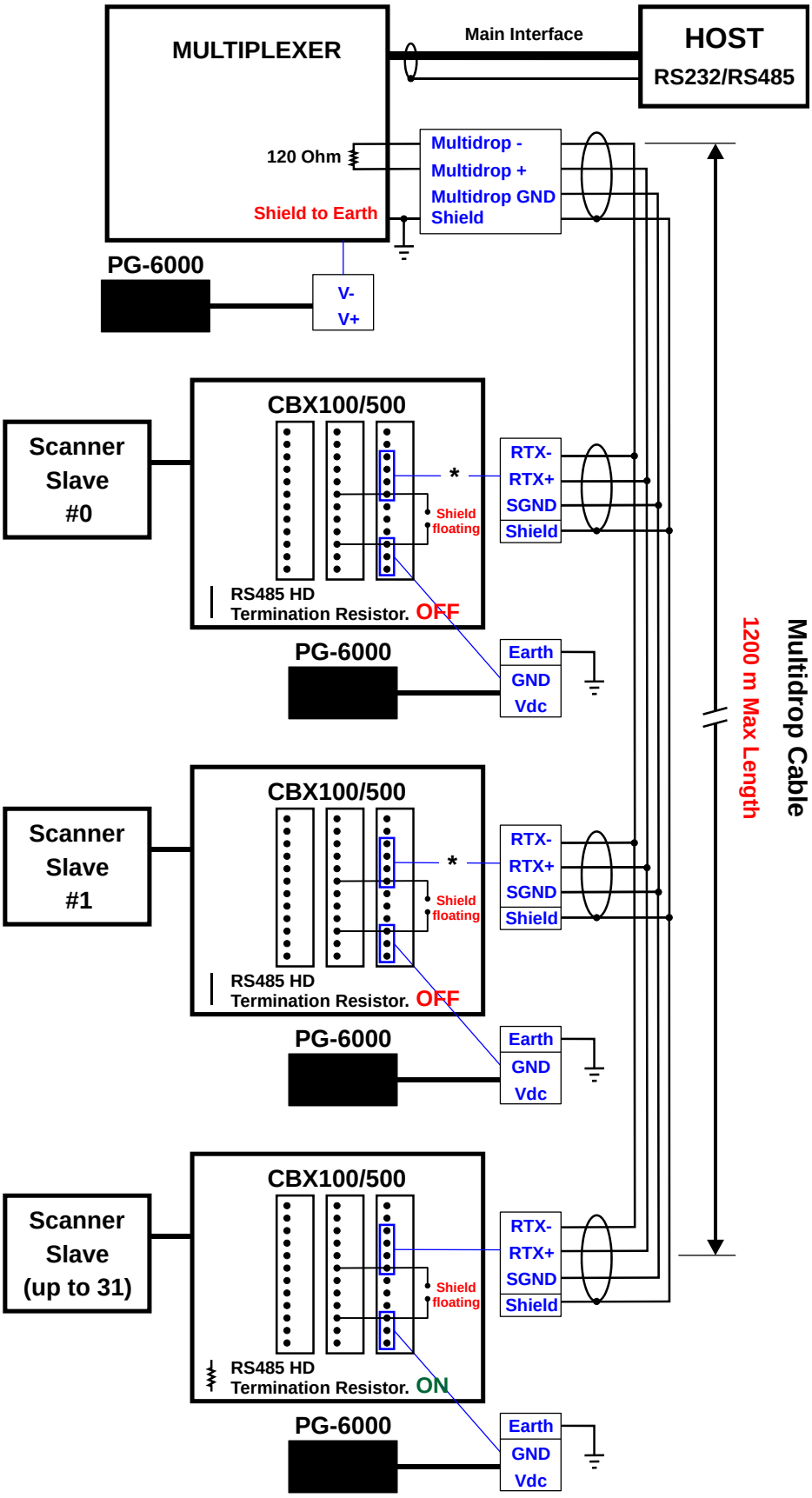

Figure 12 - DX8200A Multidrop Connection to a Multiplexer

***** When using CBX500, the **Main** interface multidrop network signals: **Shield**, **SGND**, **RTX+**and **RTX-** are repeated on terminal connector row 4 to facilitate system cabling.

3.3 AUXILIARY RS232 INTERFACE

The auxiliary serial interface is used exclusively for RS232 point-to-point connections. It is principally used for scanner configuration from a laptop PC but is also available for LOCAL ECHO to a monitoring PC or for Pass through layouts. This interface is active when the Data Tx parameter is enabled.

The parameters relative to the aux interface (baud rate, data bits, etc.) can be defined using the Genius™ utility program or Genius™ based Host Mode Programming installed from the CD-ROM.

The 9-pin female Auxiliary Interface connector inside the CBX is the preferred connector for device configuration or temporary communication monitoring.

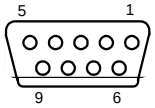

Figure 13 - 9-pin female connector

If permanent system wiring is required, the following pins are used to connect the RS232 auxiliary interface. The overall maximum cable length should not exceed 15 m (50 ft). In this case it is advisable to use shielded cables. If the shield is tied to ground at the Host, then leave it floating at the CBX. If it is floating at the Host then tie it to Shield at the CBX.

CBX100/500	Function
RX	Auxiliary Interface Receive Data
TX	Auxiliary Interface Transmit Data
SGND	Auxiliary Interface Reference

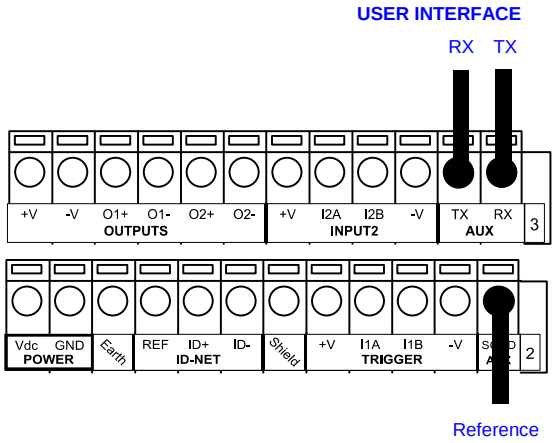

Figure 14 - RS232 Auxiliary Interface Connections

NOTE

Do not connect the Aux Interface to the CBX spring clamp connectors and the 9-pin connector simultaneously.

3.4 INPUTS

There are four optocoupled polarity insensitive inputs available on the scanner: Input 1 (External Trigger/PS), Input 2 (Encoder), Input 3 and 4 generic inputs.

The electrical features of the inputs are:

Maximum voltage:	30 Vdc
Maximum current Input 1 and 2:	12 mA (scanner) + 12 mA (CBX)
Maximum current Input 3 and 4:	12 mA (scanner)

CBX100/500	Function
+V	Power Source - External Trigger
I1A	External Trigger A (polarity insensitive) for PS
I1B	External Trigger B (polarity insensitive) for PS
I2A	Input 2 A (polarity insensitive) for Encoder
I2B	Input 2 B (polarity insensitive) for Encoder
I3A (CBX500 only)	Input 3 A (polarity insensitive)
I4A (CBX500 only)	Input 4 A (polarity insensitive)
I34B (CBX500 only)	Common Reference for Inputs 3 and 4 (polarity insensitive)
-V	Power Reference - External Trigger

The active state of all the inputs is selected in software (open or closed). Refer to the Genius™ Help On Line.

All inputs are optocoupled, polarity insensitive, and driven by a constant current generator; the command signal is filtered through an anti-disturbance circuit which generates a debouncing delay which can be set to 5 ms or 500 μs. In particular, I1 for PS, I3 and I4 share the same value which usually corresponds to 5 ms when using a photoelectric sensor, while I2 is set to 500 μs when this input is used for the Encoder. The maximum Encoder frequency is **2 kHz**.

Input 1 (External Trigger/PS) is used in the On-Line and PackTrack™ operating Modes and tells the scanner to scan for a code. The yellow Phase On LED (Figure C, 3) which refers to Input 1 is on only when current flows through the input circuit and therefore when the active state of this input is set to "active open", the LED lights up when the input corresponds to OFF.

Input 2 is normally used for the Encoder input. In PackTrack™ mode, it detects the conveyor speed.

Inputs 3 and 4 can be used as the stop signal for the reading phase.

The debouncing delay value can be changed through the software parameter *Debouncing for Input x*, see the "6-8 K Software Configuration Parameter Guide" or Help file.

Powering Inputs

Input devices can be supplied by either scanner power (V+ and V-) or external power supplies (Vext).

Electrical isolation between the input command logic and the scanner is maintained when powering the input devices from an external supply voltage (Vext).

The driving logic of the input signals may be powered, for convenience, with the voltage supply at the CBX terminal block spring clamps (V+) and (V-). In this case, however, the device is no longer electrically isolated. The voltage available on pins V+ and V-, is physically the same as the input power for the scanner (Vdc and GND).

INPUT 1 (EXTERNAL TRIGGER/PS) CONNECTIONS USING DX8200A POWER

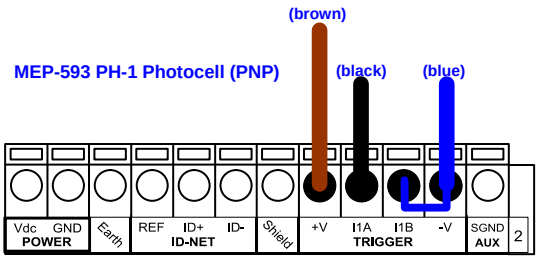

Figure 15 – MEP-593 PH-1 (PNP) External Trigger/PS Using DX8200A Power

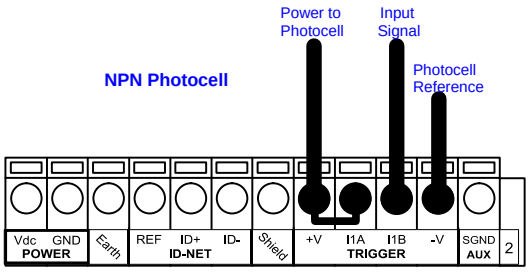

Figure 16 - NPN External Trigger/PS Using DX8200A Power

INPUT 1 (EXTERNAL TRIGGER/PS) CONNECTIONS USING EXTERNAL POWER

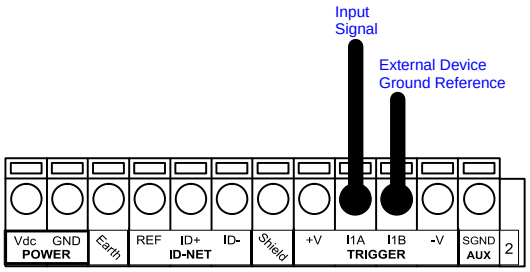

Figure 17 - PNP External Trigger/PS Using External Power (i.e. PLC signal)

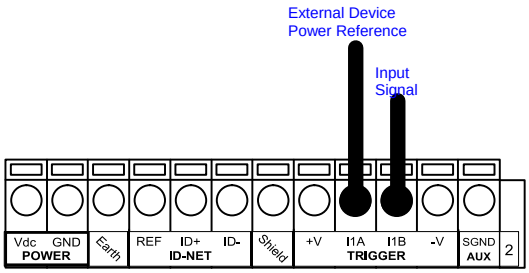

Figure 18 - NPN External Trigger/PS Using External Power (i.e. PLC signal)

INPUT 2 (ENCODER) CONNECTIONS USING DX8200A POWER

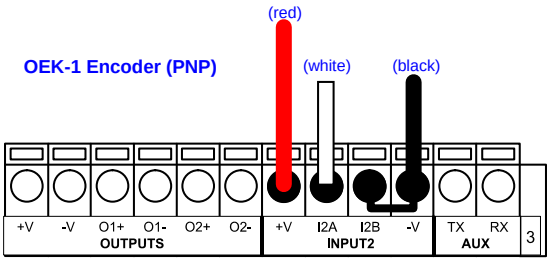

Figure 19 - OEK-1 Encoder PNP Using DX8200A Power

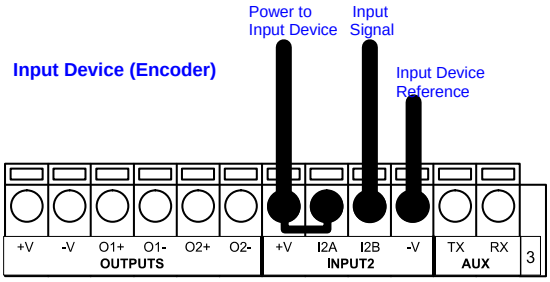

Figure 20 - Encoder NPN Using DX8200A Power

INPUT 2 (ENCODER) CONNECTIONS USING EXTERNAL POWER

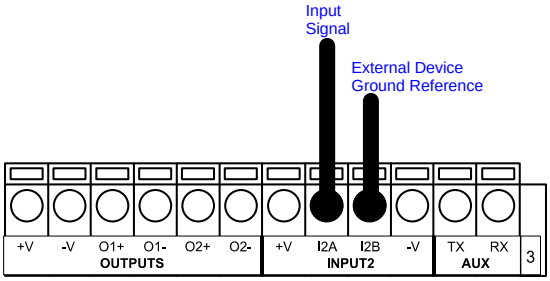

Figure 21 - PNP Encoder Using External Power (i.e. PLC signal)

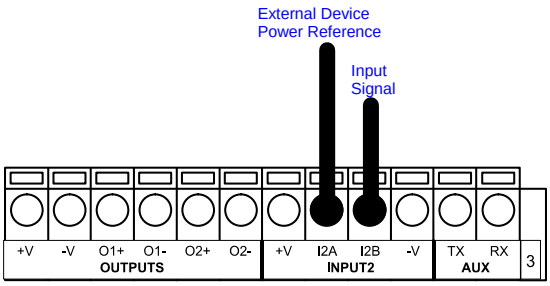

Figure 22 - NPN Encoder Using External Power (i.e. PLC signal)

NOTE

*Terminal pins **I34B** are common to both inputs 3 and 4 and therefore these inputs cannot be driven by opposite polarity devices.*

INPUT 3 - 4 CONNECTIONS USING DX8200A POWER (CBX500 Only)

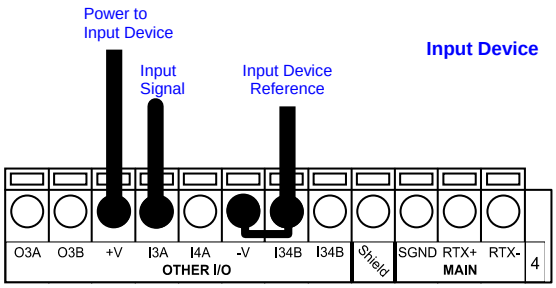

Figure 23 - PNP Input 3 - 4 Using DX8200A Power

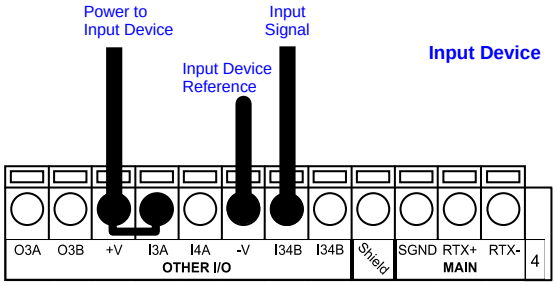

Figure 24 - NPN Input 3 - 4 Using DX8200A Power

INPUT 3 - 4 CONNECTIONS USING EXTERNAL POWER (CBX500 Only)

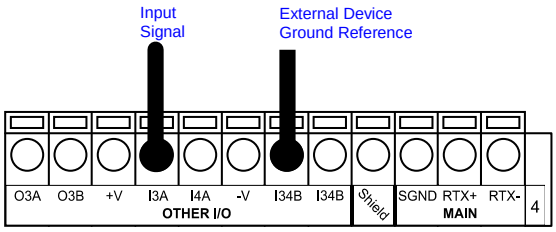

Figure 25 - PNP Input 3 - 4 Using External Power (i.e. PLC signal)

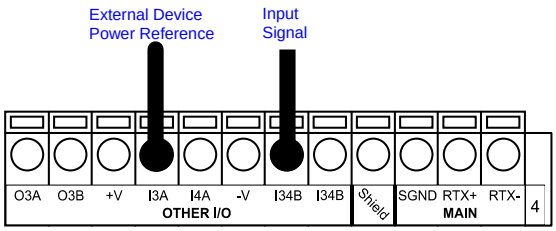

Figure 26 - NPN Input 3 - 4 Using External Power (i.e. PLC signal)

3.4.1 Code Verifier

If the DX8200A is used as a Code Verifier, the verifier code can be configured in software through the Genius™ configuration program. However it is also possible to use one of the inputs to trigger when the scanner should store a code read as the verifier code.

The Code Verifier parameter must be enabled, and the configuration parameters to allow correct Code Type reading must be saved to the scanner in order to read the verifier code.

When the selected input is activated, the next read code will be stored as the verifier code in the scanner's non-volatile (Flash) memory.

For more details see the Verifier Parameters in the "6-8 K Software Configuration Parameter Guide" or Help file.

3.5 OUTPUTS

Three general purpose outputs are available. The electrical features are given below:

Outputs 1 and 2	
Maximum Voltage	30 V
Collector Current (pulse)	130 mA Max.
Collector Current (continuous)	40 mA Max.
Saturation Voltage (VCE)	1 V at 10 mA Max.
Maximum Power Dissipation	90 mW at 50°C (Ambient temperature)

Output 3 has different electrical features. It is a bi-directional solid state relay with built-in current limit protection.

Output 3	
Maximum Voltage	± 100 V (**Vext only**)
Collector Current (pulse)	300 mA Max. at 25°C (Ambient temperature) 240 mA Max. at 50°C (Ambient temperature)
Collector Current (continuous)	200 mA Max. at 25°C (Ambient temperature) 150 mA Max. at 50°C (Ambient temperature)
R on R off	6 – 15 Ω > 500 Ω
Off-State Leakage Current	< 1 µA
Maximum Power Dissipation	550 mW at 50°C (Ambient temperature)

CBX100/500	**Function**
+V	Power Source - Outputs
O1+	Output 1 +
O1-	Output 1 -
O2+	Output 2 +
O2-	Output 2 -
O3A (CBX500 only)	Output 3 A (polarity insensitive)
O3B (CBX500 only)	Output 3 B (polarity insensitive)
-V	Power Reference Outputs

The function of each output can be defined by the user (No Read, Right, Wrong, etc.). Refer to the Genius™ Help On Line.

The output signals are fully programmable being determined by the configured Activation/Deactivation events, Deactivation Timeout or a combination of the two.

By default, Output 1 is associated with the Complete Read event, which activates when all the selected codes are correctly decoded, and Output 2 is associated with the No Read event, which activates when the code signaled by the external trigger/PS is not decoded.

Output 3 can be assigned to the same events and it has the advantage of being polarity insensitive. By default it is not assigned to any event. The CBX500 must be used to connect this output.

OUTPUT 1 and 2 CONNECTIONS USING DX8200A POWER

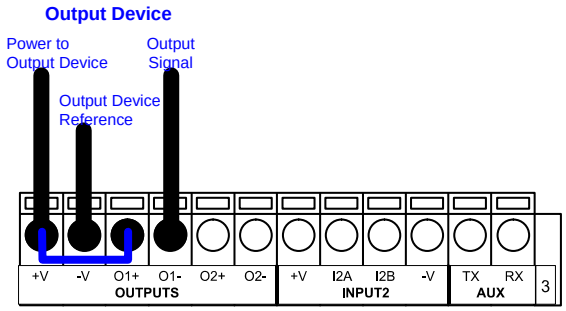

Figure 27 - Open Emitter Output Using DX8200A Power

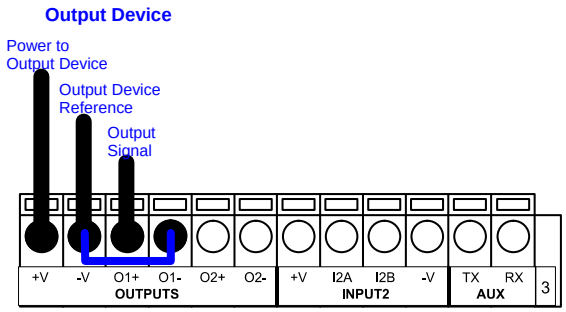

Figure 28 - Open Collector Output Using DX8200A Power

OUTPUT 1 and 2 CONNECTIONS USING EXTERNAL POWER

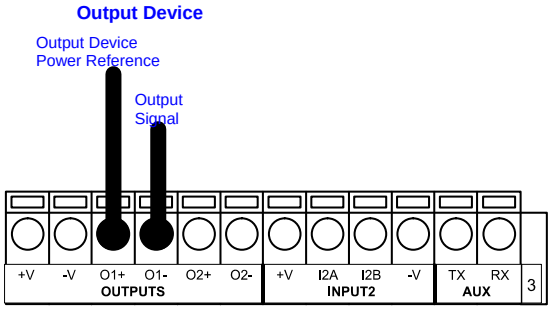

Figure 29 - Open Emitter Output Using External Power

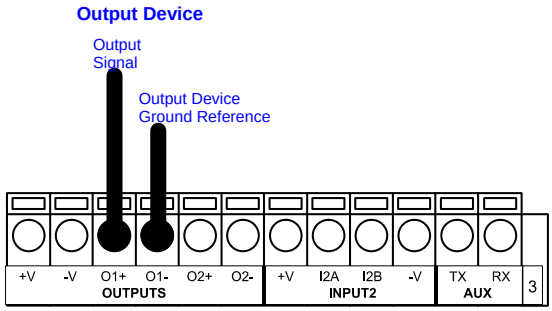

Figure 30 - Open Collector Output Using External Power

OUTPUT 3 CONNECTIONS USING DX8200A POWER (CBX500 Only)

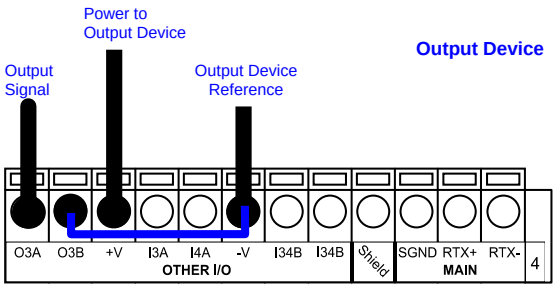

Figure 31 - Output 3 Using DX8200A Power

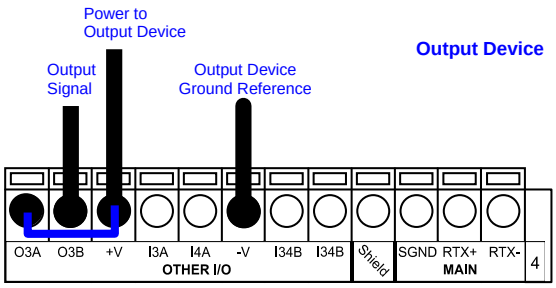

Figure 32 - Output 3 Using DX8200A Power

OUTPUT 3 CONNECTIONS USING EXTERNAL POWER (CBX500 Only)

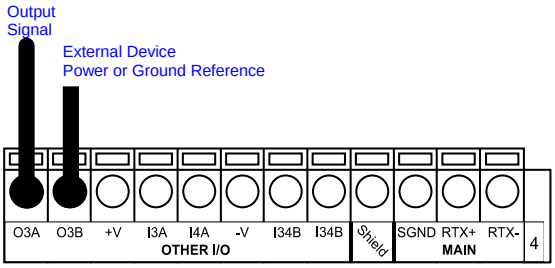

Figure 33 - Ouput 3 Using External Power

The command signals are filtered and generate a delay of about 50 µs for Output 1 and 2 and 1 ms for Output 3.

3.6 USER INTERFACE - HOST

The following table contains the pinout for standard RS232 PC Host interface. For other user interface types please refer to their own manual.

RS232 PC-side connections			
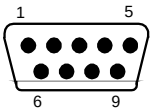 9-pin male connector		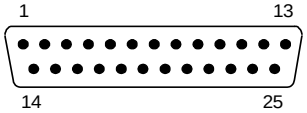 25-pin male connector	
Pin	**Name**	**Pin**	**Name**
2	RX	3	RX
3	TX	2	TX
5	GND	7	GND
7	RTS	4	RTS
8	CTS	5	CTS

4 CUSTOM CABLE ELECTRICAL CONNECTIONS

Each scanner model has the following connectors:

Scanner Model	Connectors
Standard	26-pin male serial interface and I/O connector 17-pin male Lonworks connector 17-pin female Lonworks connector
Ethernet	26-pin male serial interface and I/O connector 17-pin male Lonworks connector 17-pin female Lonworks connector M12 4-pin D-coded connector for Ethernet *
Profibus	26-pin male serial interface and I/O connector 17-pin male Lonworks connector 17-pin female Lonworks connector Profibus 9-pin female connector
DeviceNet	26-pin male serial interface and I/O connector 17-pin male Lonworks connector 17-pin female Lonworks connector DeviceNet 5-pin male connector

* older models have RJ45 Industrial modular connector

All DX8200A models are equipped with a 26-pin male D-sub connector for connection to the host computer, power supply and input/output signals. These signals can be wired using a custom cable according to the application needs.

The paragraphs in this chapter detail the individual signal connections.

For Lonworks network connections see chapters 5 and 7.

For Fieldbus connections see chapters 6 and 7.

For ID-NET™ Fixed Baudrate connections see the Application Note on the CD-ROM.

The details of the connector pins are indicated in the following table:

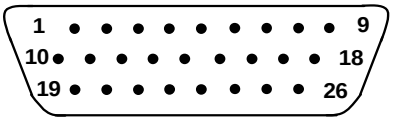

Figure 34 - 26-pin Connector

DX8200A 26-pin D-sub Connector Pinout		
Pin	**Name**	**Function**
1	CHASSIS	Chassis - internally connected to GND Cable shield connected to chassis
20	RX	Receive Data of Auxiliary RS232 (referred to GND)
21	TX	Transmit Data of Auxiliary RS232 (referred to GND)
8	O1+	Configurable Digital Output 1 - positive pin
22	O1-	Configurable Digital Output 1 - negative pin
11	O2+	Configurable Digital Output 2 - positive pin
12	O2-	Configurable Digital Output 2 - negative pin
16	O3A	Configurable Digital Output 3 - polarity insensitive
17	O3B	Configurable Digital Output 3 - polarity insensitive
18	I1A	External Trigger (polarity insensitive) for PS
19	I1B	External Trigger (polarity insensitive) for PS
6	I2A	Input Signal 2 (polarity insensitive) for Encoder
10	I2B	Input Signal 2 (polarity insensitive) for Encoder
14	I3A	Input Signal 3 (polarity insensitive)
15	I4A	Input Signal 4 (polarity insensitive)
24	I34B	Common reference of Input 3 and Input 4 (polarity insensitive)
9,13	Vdc	Power Supply Input Voltage +
23,25,26	GND	Power Supply Input Voltage -

Main Interface Connector Pinout				
Pin		**RS232**	**RS485 Full Duplex**	**RS485 Half Duplex**
2		TX	TX+	RTX+
3		RX	*RX+	
4		RTS	TX-	RTX-
5		CTS	*RX-	
7		GND_ISO	GND_ISO	GND_ISO

***** Do not leave floating, see par. 4.2.2 for connection details.

4.1 POWER SUPPLY

Vdc models:
The supply voltage for correct operation of the scanner must be between 20 and 30 VDC. The max. power consumption is 30 W including startup current.

Several accessory power supplies are available to power the DX8200A Vdc models and reading station components. See par. 1.7.

A security system allows the laser to activate only once the motor has reached the correct rotational speed; consequently, the laser beam is generated after a slight delay from the power on of the scanner.

Note that GND is internally connected to chassis. The cable shield is also connected to pin 1 - CHASSIS.

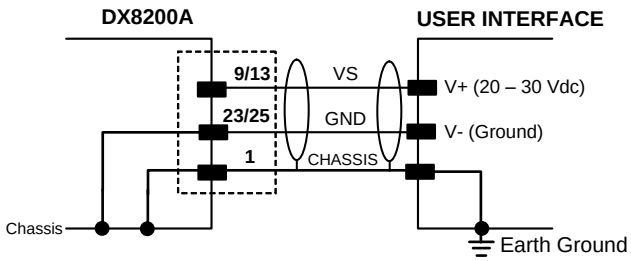

Figure 35 – Power Supply Using the 26-pin Connector (Vdc models)

Vac models:
The supply voltage for correct operation of the scanner must be between 110 and 230 VAC. The max. power consumption is 48 VA including startup current.

24 Vdc is generated and available on the 26-pin connector and can be used to power external devices through a correctly jumpered CBX100/CBX500, i.e. photocell, etc. **This voltage however cannot be used to propagate power for a Lonworks network**.

A security system allows the laser to activate only once the motor has reached the correct rotational speed; consequently, the laser beam is generated after a slight delay from the power on of the scanner.

4.2 MAIN SERIAL INTERFACE

The main serial interface is compatible with the following electrical standards:

RS232

RS485 full-duplex

RS485 half-duplex

The main interface type and the relative parameters (baud rate, data bits, etc.) can be set using the Genius™ utility program or the Genius™ based Host Mode Programming procedure. For more details refer to the section "Main Serial Port" in the Genius™ Help On Line.

4.2.1 RS232 Interface

The main serial interface is used for communication with the Host computer and allows both transmission of code data and configuring the reader. The overall maximum cable length should not exceed 15 m (50 ft).

The following pins of the 26-pin connector are used for RS232 interface connection:

Pin	Name	Function
2	TX	Transmit
3	RX	Receive
4	RTS	Request to send
5	CTS	Clear to send
7	GND_ISO	Main signal ground

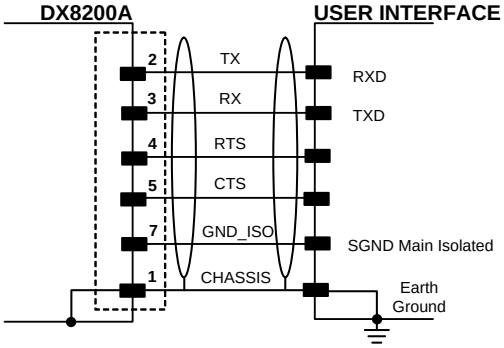

Figure 36 - RS232 Connections

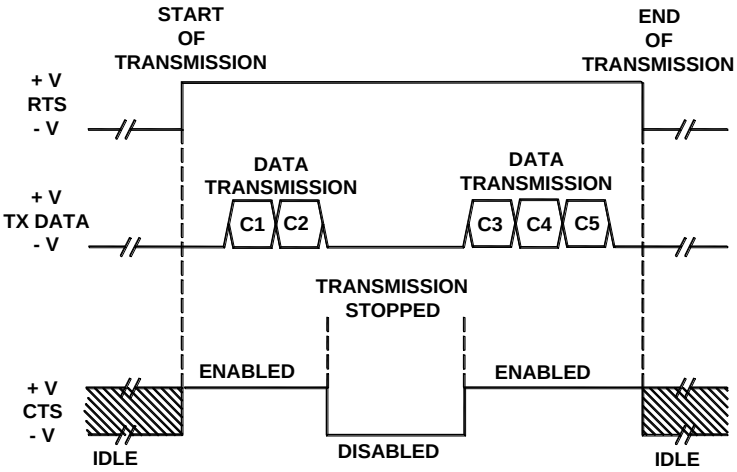

The RTS and CTS signals control data transmission and synchronize the connected devices.

If the RTS/CTS hardware protocol is enabled, the DX8200A activates the RTS output to indicate a message can be transmitted. The receiving unit must activate the CTS input to enable the transmission.

Figure 37 - RS232 Control Signals

4.2.2 RS485 Full-Duplex Interface

The RS485 full-duplex (5 wires + shield) interface is used for non-polled communication protocols in point-to-point connections over longer distances than those acceptable for RS232 communications or in electrically noisy environments. The overall maximum cable length should not exceed 1200 m (3940 ft).

The following pins of the 26-pin connector are used for RS485 full-duplex interface connection:

Pin	Name	Function
2	TX+	RS485 output (+)
3	RX+	RS485 input (+)
4	TX-	RS485 output (-)
5	RX-	RS485 input (-)
7	GND_ISO	Main signal ground

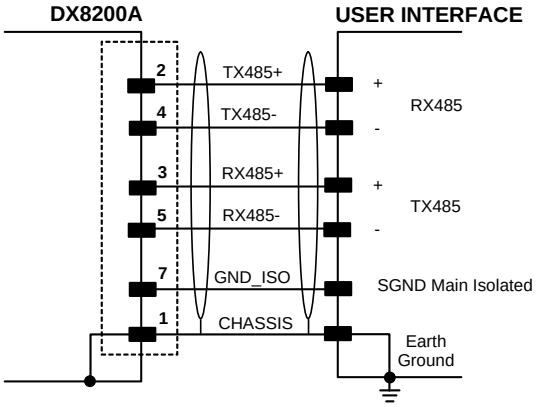

Figure 38 - RS485 Full-Duplex Interface Connections

NOTE

For applications that do not use RX485 signals, do not leave these lines floating but connect them to GND_ISO as shown below.

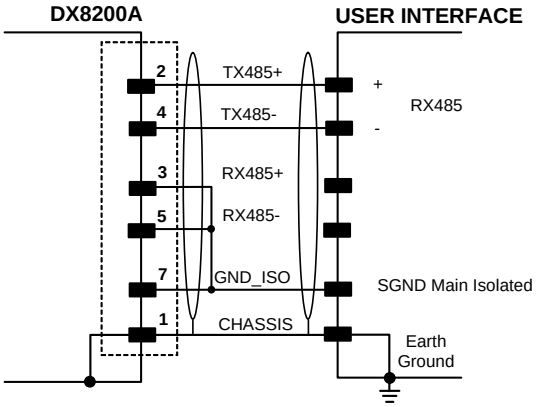

Figure 39 - RS485 Full-Duplex Connections using Only TX Signals

4.2.3 RS485 Half-Duplex Interface

NOTE

This interface is provided for backward compatibility. We recommend using the more efficient Lonworks network for Master/Slave or Multiplexer layouts.

The RS485 half-duplex (3 wires + shield) interface can be used for polled communication protocols.

It can be used for Multidrop connections with a Datalogic Multiplexer, (see par. "Multiplexer" in Appendix A) exploiting a proprietary protocol based on polled mode called MUX32 protocol, where a master device polls slave devices to collect data. The overall maximum cable length should not exceed 1200 m (3940 ft).

The following pins of the 26-pin connector are used for RS485 half-duplex interface connection:

Pin	Name	Function
2	RTX+	RS485 input/output (+)
4	RTX-	RS485 input/output (-)
7	GND_ISO	Main signal ground

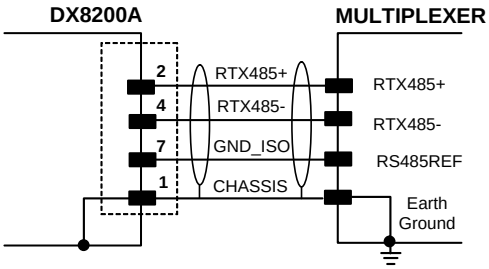

Figure 40 – RS485 Half-Duplex Interface Connections

This interface is forced by software when the protocol selected is MUX32 protocol.

In a Multiplexer layout, the Multidrop address must also be set via serial channel by the Genius™ utility or by the Host Programming Mode.

Figure 41 shows a multidrop configuration with DX8200A scanners connected to a Multiplexer.

CAUTION

This is an example of multidrop wiring. Consult the multiplexer manual for complete wiring instructions.

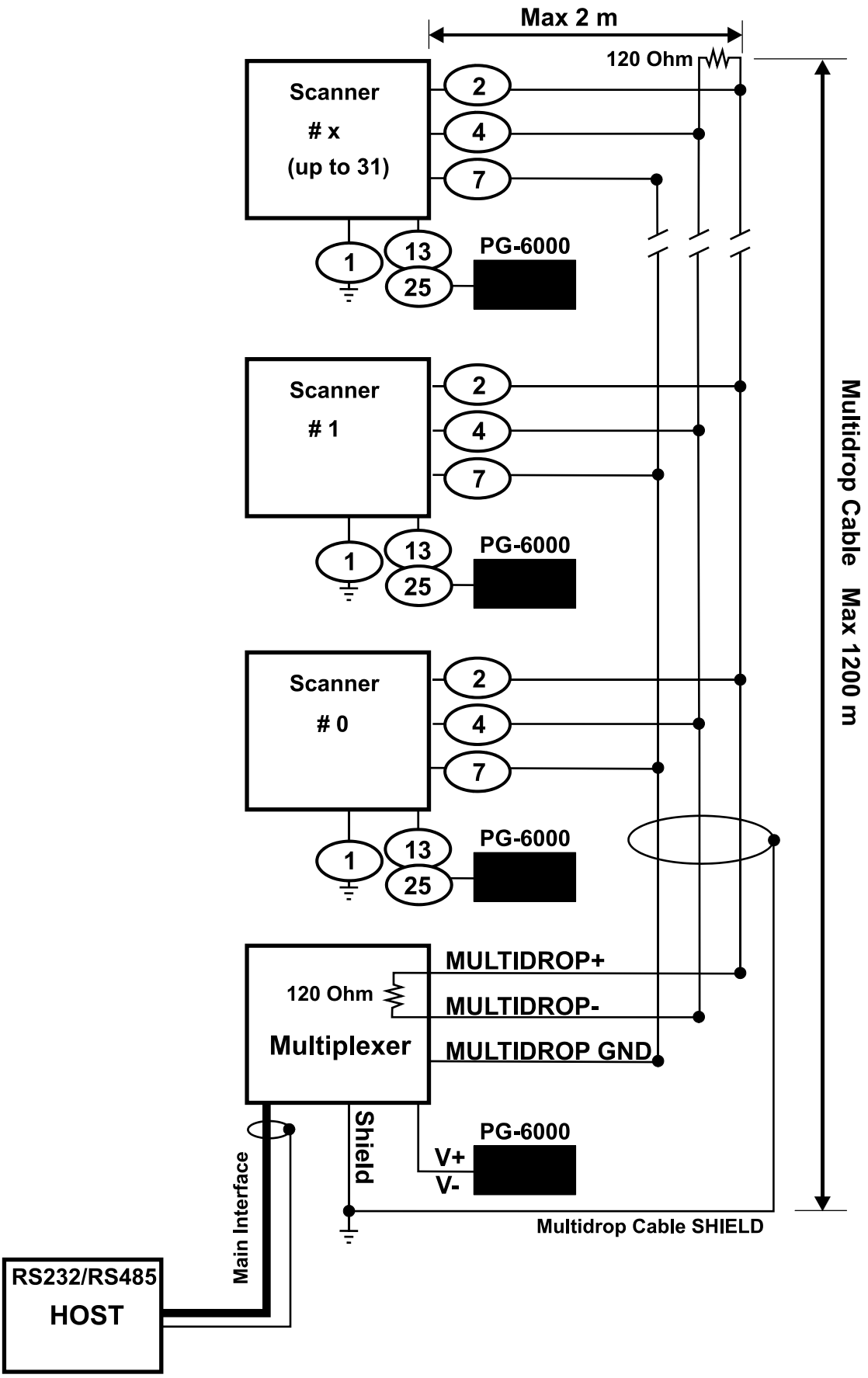

Figure 41 – DX8200A Multidrop Connection to a Multiplexer

4.3 AUXILIARY INTERFACE

The auxiliary serial interface is used exclusively for RS232 point-to-point connections. It is principally used for scanner configuration from a laptop PC but is also available for LOCAL ECHO to a monitoring PC or for Pass through layouts. This interface is active when the Data Tx parameter is enabled. The overall maximum cable length should not exceed 15 m (50 ft).

The following pins of the 26-pin connector are used for RS232 full-duplex interface connection:

Pin	Name	Function
20	RX	Receive data
21	TX	Transmit data
23	GND	Common Ground

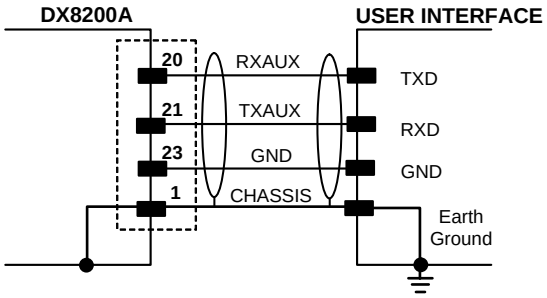

Figure 42 - RS232 Auxiliary Interface Connections

4.4 INPUTS

There are four optocoupled polarity insensitive inputs available on the 26-pin connector of the DX8200A scanner: Input 1 (External Trigger/PS), Input 2 (Encoder), Input 3 and 4 generic inputs:

The electrical features of these inputs are:

Maximum voltage	30 Vdc
Maximum current all Inputs:	12 mA

Pin	Name	Function
18	I1A	External Trigger (polarity insensitive) for PS
19	I1B	External Trigger (polarity insensitive) for PS
6	I2A	Input Signal 2 (polarity insensitive) for Encoder
10	I2B	Input Signal 2 (polarity insensitive) for Encoder
14	I3A	Input Signal 3 (polarity insensitive)
15	I4A	Input Signal 4 (polarity insensitive)
24	I34B	Common Reference of Input 3 and Input 4 (polarity insensitive)

The active state of all the inputs is selected in software (open or closed). Refer to the Genius™ Help On Line.

All inputs are optocoupled, polarity insensitive, and driven by a constant current generator; the command signal is filtered through an anti-disturbance circuit which generates a debouncing delay which can be set to 5 ms or 500 μs. In particular, I1 for PS, I3 and I4 share

the same value which usually corresponds to 5 ms when using a photoelectric sensor, while I2 is set to 500 μs when this input is used for the Encoder. The maximum Encoder frequency is **2 kHz**.

Input 1 (External Trigger/PS) is used in the On-Line and PackTrack™ operating Modes and tells the scanner to scan for a code. The yellow Phase On LED (Figure C, 3) which refers to Input 1 is on only when current flows through the input circuit and therefore when the active state of this input is set to "active open", the LED lights up when the input corresponds to OFF.

Input 2 is normally used for the Encoder input. In PackTrack™ mode, it detects the conveyor speed.

Inputs 3 and 4 can be used as the stop signal for the reading phase.

The debouncing delay value can be changed through the software parameter *Debouncing for Input x*, see the "6-8 K Software Configuration Parameter Guide" or Help file.

Powering Inputs
Input devices can be supplied by either scanner power (Vdc and GND) or external power supplies (Vext).

Electrical isolation between the input command logic and the scanner is maintained when powering the input devices from an external supply voltage (Vext).

The driving logic of the input signals may be powered, for convenience, with the voltage supply between pins 9 (Vdc) and 23 (GND) of the 26-pin I/O connector. In this case, however, the device is no longer electrically isolated. The voltage available on the 26-pin I/O connector, is physically the same as used to power the scanner.

INPUT 1 - 2 CONNECTIONS USING DX8200A POWER

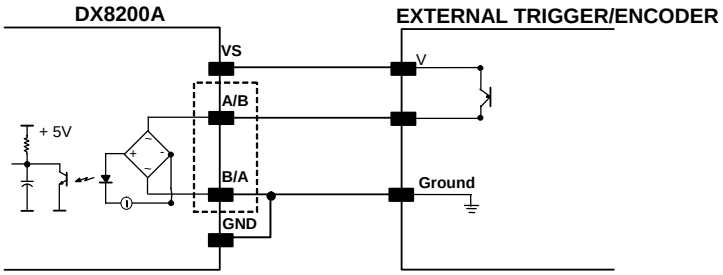

Figure 43 - PNP Command Input Connection Using Scanner Power

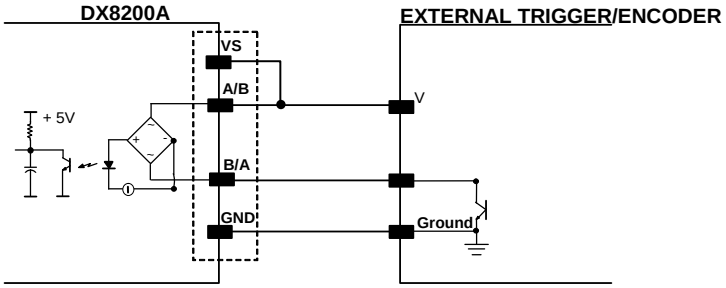

Figure 44 - NPN Command Input Connection Using Scanner Power

INPUT 1 - 2 CONNECTIONS USING EXTERNAL POWER

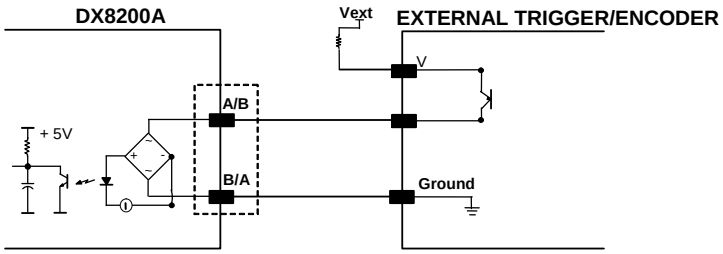

Figure 45 – PNP Command Input Connection Using External Power

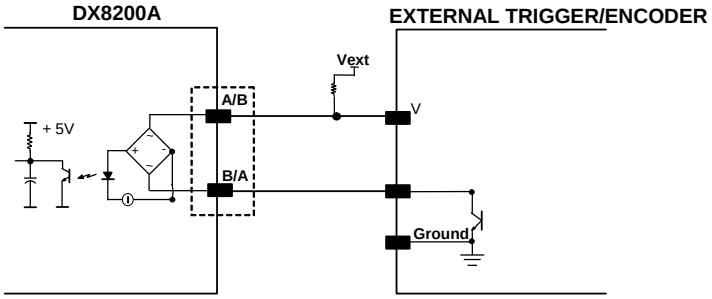

Figure 46 - NPN Command Input Connection Using External Power

NOTE

*Terminal pins **I34B** are common to both inputs 3 and 4 and therefore these inputs cannot be driven by opposite polarity devices.*

INPUT 3 - 4 CONNECTIONS USING DX8200A POWER

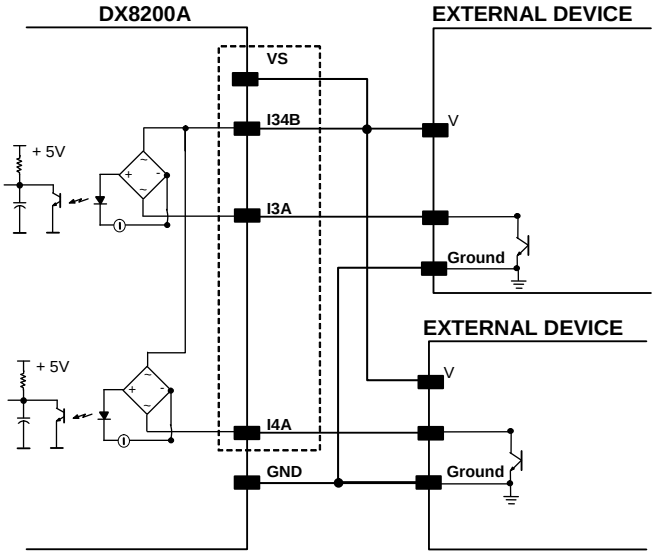

Figure 47 - I3/I4 NPN Input Command using Scanner Power

INPUT 3 - 4 CONNECTIONS USING EXTERNAL POWER

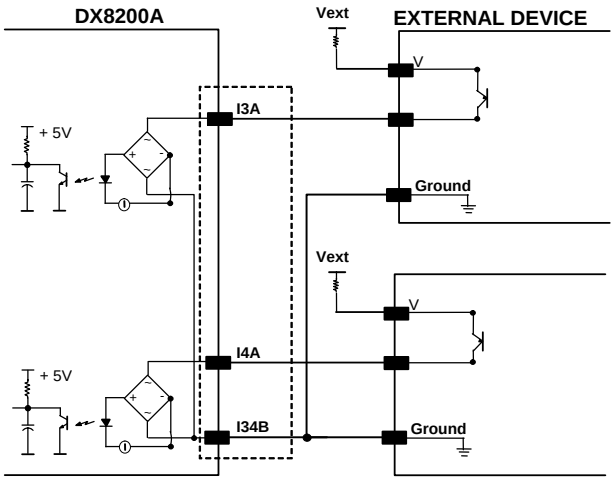

Figure 48 - I3/I4 PNP Input Command using External Power

4.4.1 Code Verifier

If the DX8200A is used as a Code Verifier, the verifier code can be configured in software through the Genius™ configuration program. However it is also possible to use one of the inputs to trigger when the scanner should store a code read as the verifier code.

The Code Verifier parameter must be enabled, and the configuration parameters to allow correct Code Type reading must be saved to the scanner in order to read the verifier code.

When the selected input is activated, the next read code will be stored as the verifier code in the scanner's non-volatile (Flash) memory.

For more details see the Verifier Parameters in the "6-8 K Software Configuration Parameter Guide” or Help file.

4.5 OUTPUTS

Three general purpose outputs are available. The electrical features are given below:

Outputs 1 and 2	
Maximum Voltage	30 V
Collector Current (pulse)	130 mA Max.
Collector Current (continuous)	40 mA Max.
Saturation Voltage (VCE)	1 V at 10 mA Max.
Maximum Power Dissipation	90 mW at 50°C (Ambient temperature)

Output 3 has different electrical features. It is a bi-directional solid state relay with built-in current limit protection.

Output 3	
Maximum Voltage	± 100 V (**Vext only**)
Collector Current (pulse)	300 mA Max. at 25°C (Ambient temperature) 240 mA Max. at 50°C (Ambient temperature)
Collector Current (continuous)	200 mA Max. at 25°C (Ambient temperature) 150 mA Max. at 50°C (Ambient temperature)
R on R off	6 – 15 Ω > 500 Ω
Off-State Leakage Current	< 1 µA
Maximum Power Dissipation	550 mW at 50°C (Ambient temperature)

Pin	Name	Function
8	O1+	Configurable digital output 1 – positive pin
22	O1-	Configurable digital output 1 – negative pin
11	O2+	Configurable digital output 2 – positive pin
12	O2-	Configurable digital output 2 – negative pin
16	O3A	Configurable digital output 3 – polarity insensitive
17	O3B	Configurable digital output 3 – polarity insensitive

The function of each output can be defined by the user (No Read, Right, Wrong, etc.). Refer to the Genius™ Help On-Line for further details.

The output signals are fully programmable being determined by the configured Activation/Deactivation events, Deactivation Timeout or a combination of the two.

By default, Output 1 is associated with the Complete Read event, which activates when all the selected codes are correctly decoded, and Output 2 is associated with the No Read event, which activates when the code signaled by the external trigger/PS is not decoded.

Output 3 can be assigned to the same events and it has the advantage of being polarity insensitive. By default it is not assigned to any event.

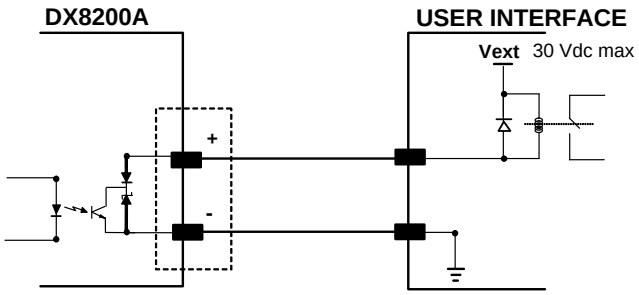

Figure 49 – Output 1 and Output 2 Interface

When the load is powered by an external power supply, the voltage must be less than 30 V.

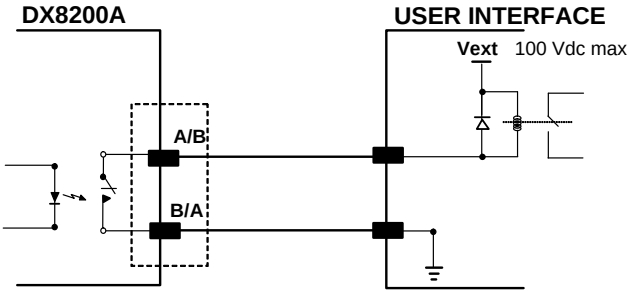

Figure 50 – Output 3 Interface

The command signals are filtered and generate a delay of about 50 µs for Output 1 and 2 and 1 ms for Output 3.

4.6 USER INTERFACE

How To Build A Simple Interface Test Cable:

The following wiring diagram shows a simple test cable including power, external (push-button) trigger and PC RS232 COM port connections.

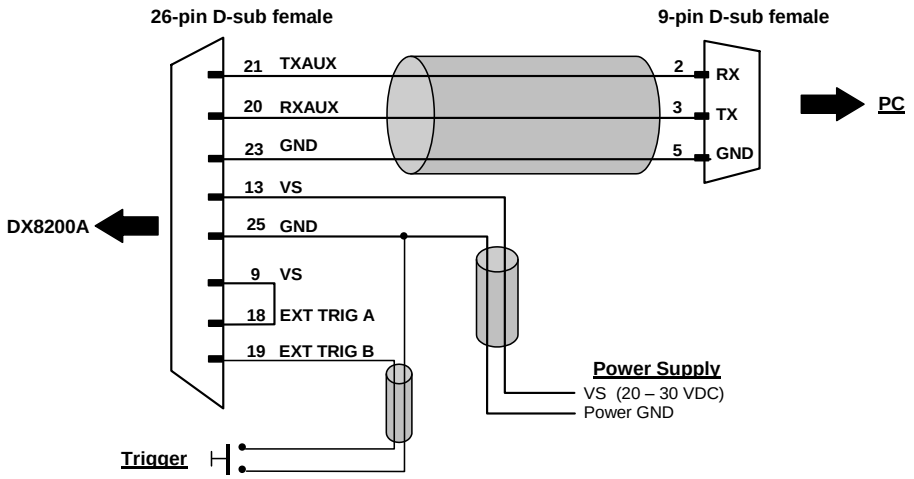

Test Cable for DX8200A

5 LONWORKS CONNECTIONS

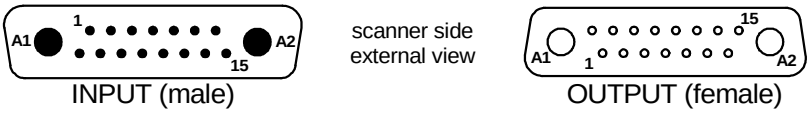

Figure 51 - Lonworks INPUT/OUTPUT Connectors

The following pinout is valid for the INPUT connector as well as for the OUTPUT connector.

Lonworks INPUT/OUTPUT 17-pin Connector Pinout		
Pin	**Name**	**Function**
A1	GND	supply voltage (negative pin)
A2	VS	supply voltage 20 to 30 vdc (positive pin)
1	CHASSIS	Cable shield A – internally connected by capacitor to chassis
2	n.c.	Not connected
3	CHASSIS	Cable shield B – internally connected by capacitor to chassis
4	n.c.	Not connected
5	n.c.	Not connected
6	n.c.	Not connected
7	VS_I/O	Supply voltage of I/O circuit
8	Lon A+	Lonworks a line (positive pin)
9	Lon A-	Lonworks a line (negative pin)
10	Lon B+	Lonworks b line (positive pin)
11	Lon B-	Lonworks b line (negative pin)
12	SYS_I/O	System signal
13	SYS_ENC_I/O	System signal
14	Reserved	Internally connected
15	Ref_I/O	Reference voltage of I/O circuit

5.1 NETWORK TERMINATION

When building a Lonworks system the network must be properly terminated by positioning the BTK-8102 Lonworks terminator in the DX8200A master reader and the BTK-8100 Lonworks bus return in the last DX8200A slave reader.

The BTK-8100 bus return provides a connector to be inserted in the Lonworks 17-pin female connector of the last slave reader in the network; while the BTK-8102 Lonworks terminator provides a different connector to be inserted in the Lonworks 17-pin male connector of the master reader:

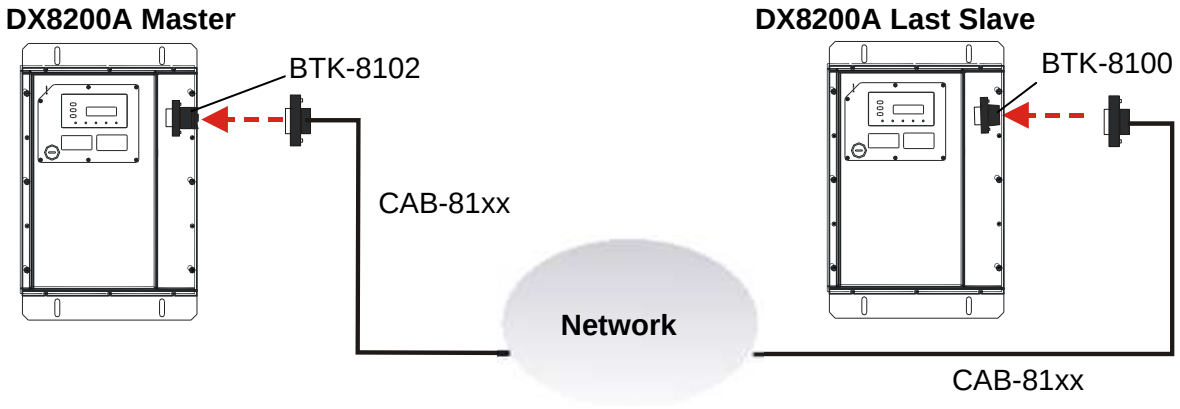

Figure 52 - BTK-8102 and BTK-8100

Two cables are also provided as accessories to terminate and power the network: CAB-8605 and CAB-8305.

CAB-8605 is a power and Lonworks termination cable to be used for connecting the DX8200A master to an external power unit within the network; while CAB-8305 is a power and bus return cable to be used for connecting the last DX8200A slave to an external power unit. **These two cables must only be used for VDC models**.

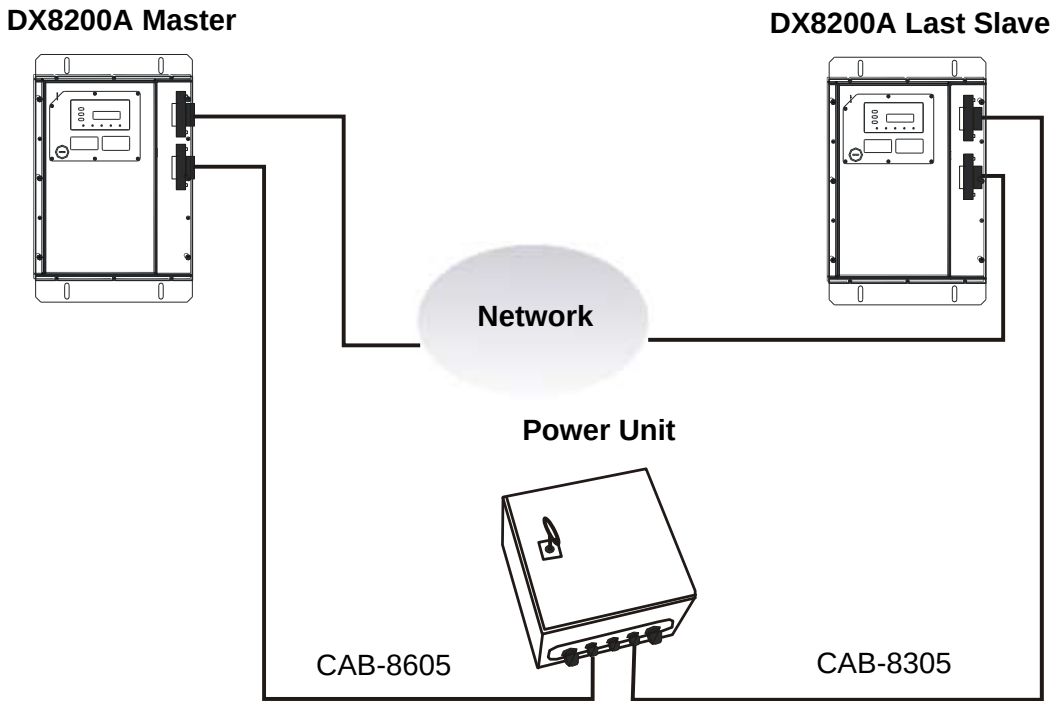

Figure 53 – CAB-8605 and CAB-8305

5.2 LONWORKS INTERFACE

The Lonworks network is used for both input and output connection to build a multi-sided or omni-station system connecting several readers.

The DX8200A master usually employs the 17-pin female connector for output connection to the first slave, while the 17-pin male connector is terminated by inserting the BTK-8102 terminator (see Figure 52 for details).

Both connectors are always employed when connecting together the slave readers. In particular, the 17-pin female connector is used for output connection and the male one for input connection. The female connector in the last slave reader is terminated by the BTK-8100 bus return to close the system network.

The following diagram represents the connection between a DX8200A working as master and a DX8200A working as a slave reader.

The cable shields for LON A/B are connected to pin1 and pin 3 - CHASSIS.

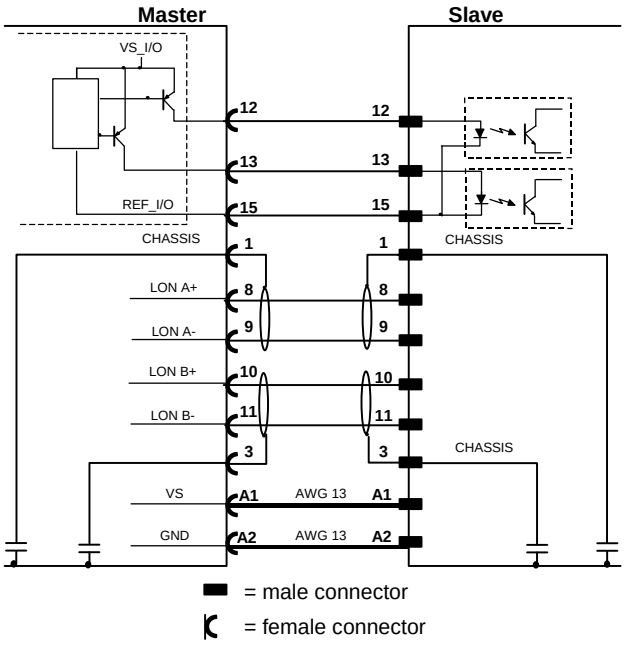

Figure 54 – DX8200A Master/Slave Lonworks Connection

The following diagrams represent different network terminations using either the BTK-8102 Lonworks terminator or the BTK-8100 bus return. In Figure 56 the BTK-8102 terminator is indicated by the T element, while the figure below shows its electrical circuit in details:

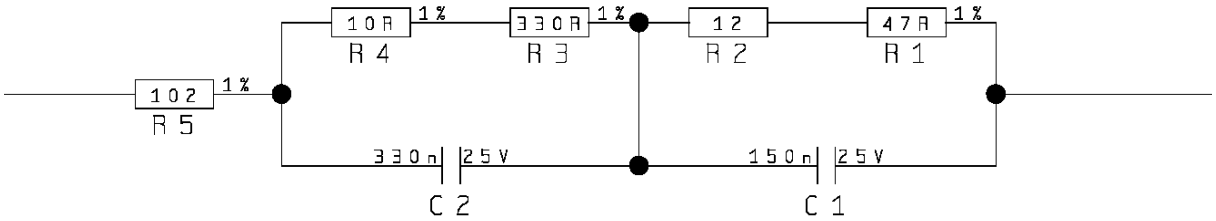

Figure 55 – BTK-8102 Electrical Circuit

The diagram below represents the termination of the double Lonworks line of a DX8200A working as master by means of the BTK-8102.

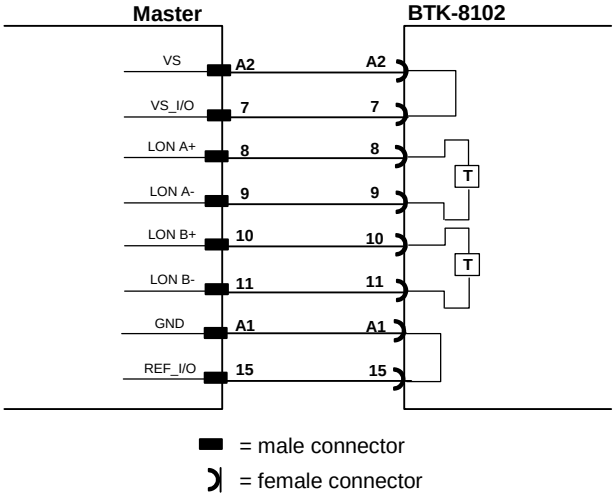

Figure 56 – DX8200A Master Termination

The diagram below represents the Lonworks bus return of a DX8200A working as slave by means of the BTK-8100.

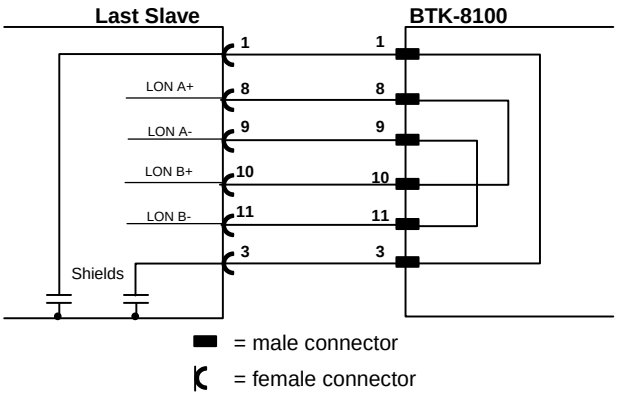

Figure 57 – DX8200A Lonworks Bus Return

6 FIELDBUS CONNECTIONS

6.1 ETHERNET INTERFACE

This connector is only available for DX8200A Ethernet models and allows the Ethernet connection between the host and the reader.

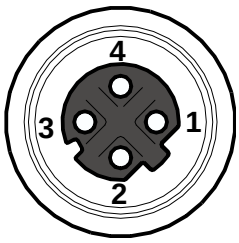

Figure 58 – DS8100A M12 4-pin D-Coded Female Ethernet Connector

This interface and the connector pinout (see the following table) are IEEE 802.3 10 BaseT and IEEE 802.3u 100 Base Tx compliant.

M12 4-pin D-coded Female Pinout		
Pin	**Name**	**Function**
1	TX +	Transmitted data (+)
2	RX +	Received data (+)
3	TX -	Transmitted data (-)
4	RX -	Received data (-)

In order to meet EMC requirements use Ethernet shielded cable.

The Ethernet interface can be used for TCP/IP communication with a remote or local host computer by connecting the scanner to either a LAN or directly to a host PC. There is no need to use a crossover adapter since the scanner incorporates an auto-cross function.

The following is an example of a connection to a LAN using a **CAB-ETH-M0x** straight through cable:

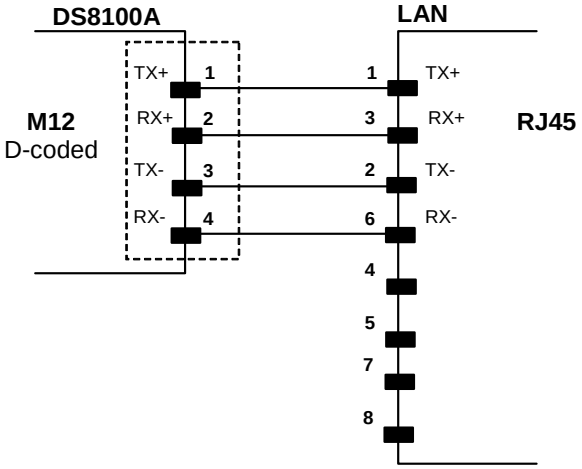

Figure 59 – Straight Through Cable

For further details refer to the “Ethernet Service Guide” document provided as reference documentation.

6.2 ETHERNET INTERFACE (OLDER MODELS)

The RJ Industrial modular connector is only available for older DX8200A Ethernet models and allows the Ethernet connection between the host and the reader.

Figure 60 – DX8200A Harting RJ Industrial® Female Connector

NOTE

For this Ethernet connection, always use the Harting RJ Industrial® Push Pull Ethernet connector (included in the package). This connector assures a robust connection and full IP rated protection.

Figure 61 – Harting RJ Industrial® Push Pull Male Connector

This interface and the connector pinout (see the following table) are IEEE 802.3 10 BaseT and IEEE 802.3u 100 Base Tx compliant.

RJ45 Modular Jack Pinout		
Pin	**Name**	**Function**
1	TX +	Transmitted data (+)
2	TX -	Transmitted data (-)
3	RX +	Received data (+)
6	RX -	Received data (-)
4, 5, 7, 8	N.C.	Not connected

In order to meet EMC requirements:

- use Ethernet shielded cable
- connect the Ethernet interface cable shield to the plant earth ground

NOTE

A ferrite (type Stewart 28A2029-0A0) must be applied on the scanner side of the Ethernet cable to reduce electrical noise. The cable shield must also be connected to the chassis of both connectors.

The Ethernet interface can be used for TCP/IP communication with a remote or local host computer by connecting the scanner to a LAN. It can also be connected directly to a host PC.

The following is an example of a connection to a LAN through a Hub using a straight through cable:

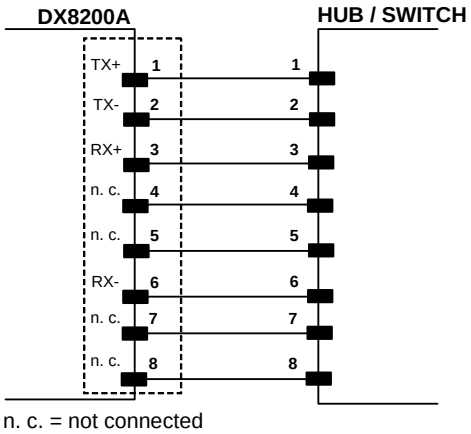

Figure 62 – Straight Through Cable

The following is an example of direct connection to a PC using an inverted cable:

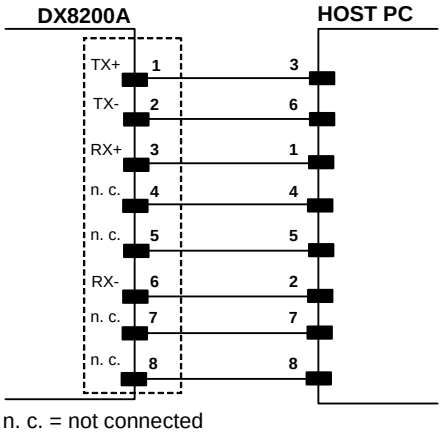

Figure 63 – Inverted Cable

For further details refer to the “Ethernet Service Guide” document provided as reference documentation.

6.3 DEVICENET INTERFACE

The 5-pin male connector is only available in the DX8200A DeviceNet model and allows connection between the host and the reader:

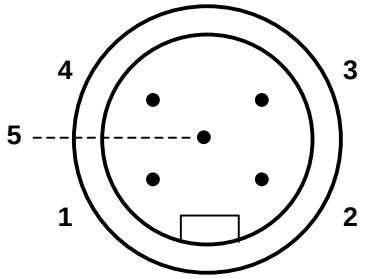

Figure 64 - DeviceNet 5-pin Male Connector

DX8200A 5-pin DeviceNet connector pinout		
Pin	**Name**	**Function**
2	V +	Supply voltage – positive pin
5	CAN_L	CAN bus data line – L
1	SHIELD	Shield
4	CAN_H	CAN bus data line – H
3	V -	Supply voltage – negative pin

NOTE

The power supplied on pin V+ and V- is used <u>only</u> to propagate power to the section of the DeviceNet board directly connected to the Bus. It is completely isolated from the DX8200A power which must be supplied on pin 9, 13 and pin 23, 25 of the 26-pin Main/Aux connector.

6.4 PROFIBUS INTERFACE

The 9-pin Profibus female connector (white) is only available in the DX8200A Profibus model and allows connection between the host and the reader:

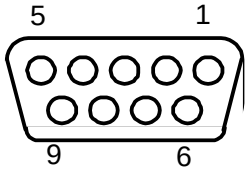

Figure 65 - Profibus 9-pin Female Connector

DX8200A 9-pin Profibus connector pinout		
Pin	**Name**	**Function**
1	Shield*	Shield, Protective Ground resp.
2	Free	
3	B-LINE (RxD/TxD-P)	Received/Transmitted Data-P
4	CNTR-P**	Repeater Control Signal
5	DGND	Data Ground (M5V)
6	+5 V	Voltage Plus (P5V)
7	Free	
8	A-LINE (RxD/TxD-N)	Received/Transmitted Data
9	CNTR-N**	Repeater Control Signal

* signal is optional

** signal is optional; RS485 level

The Profibus interface is used for communication with an Host and allows expanding the networking and remote diagnostic capabilities of the scanner.

For further details refer to the “Profibus_Fam6k.pdf” document provided as supplementary documentation.

7 TYPICAL LAYOUTS

DX8200A scanners are mainly designed to work together on a high performance Lonworks sub-network to create multi-sided and omnidirectional reading stations that can interface with Serial or Fieldbus Host networks. This chapter covers the most common Lonworks layouts.

DX8200A scanners can however, be connected in a variety of layouts depending on the number of scanners used and the required complexity of the reading station. Layouts range from single Stand Alone to complex alternative networks when Lonworks is not available for all readers (mixed reader networks). For alternative layouts see appendix A.

Several power supplies are available to power the reading stations.

Photoelectric sensors used as code presence sensors and optical encoders to signal conveyor speed are also available accessories.

The following typical layouts refer to the system hardware configurations, but they also require the correct setup of the software configuration parameters (see par. 8.2 for details).

The accessories and cables indicated in the following figures are Datalogic products. We suggest their use to guarantee the correct system functioning.

7.1 LOCAL LONWORKS NETWORK

A local Lonworks network allows logically connecting a DX8200A master reader with up to 31 DX8200A slaves. Actually, the maximum number of readers to be employed in the network depends on the system operating conditions; that is, adopted operating mode and amount of data stream.

When creating your network, always keep in mind the following guidelines:

- the Lonworks network logically supports a maximum number of 32 devices (master + slaves);
- it is recommended to adhere to the 8-in-16 rule (not more than 8 devices in any 16 meter bus segment (branch);
- for DX8200A scanners the total bus length may extend up to 65 m (213 ft);
- the maximum number of DX8200A readers supported also depends on the type of power propagation adopted by the system (see the specific power supply installation manual for details).

Typically the layouts can be divided into Synchronized (single P.S.) or Multidata (multi P.S.) networks. They can be small (up to 10 scanners) or large (more than 10 scanners).

Contact Datalogic Automation S.r.l., if your network requires a higher number of readers or in case the application throughput is very high.

For further information on Lonworks network cabling and connections see the “LonWorks® TPT Twisted Pair Transceiver Module User’s Guide”, available from the website: www.echelon.com.

CAUTION

For DX8200A Lonworks Network layouts, power is always propagated through the 17-pin scanner connectors. A specific jumper setting is required in CBXs to pass scanner power to the presence sensor, encoder, etc.

7.1.1 Small Synchronized Network

When building a small local Lonworks network (less than 10 scanners), the DX8200A master reader must be connected to a local host computer or a CBX connection box by means of a cable connected to the 26-pin D-sub male connector.

The master reader connects to the first slave reader of the system through the local Lonworks 17-pin female connector. The local Lonworks 17-pin male connector must be properly terminated by inserting the BTK-8102 Lonworks terminator or be powered by the CAB-86xx cable.

The slave readers are connected together through the local Lonworks connectors. Only the 17-pin female connector of the last slave reader must be terminated by the BTK-8100 bus return or be powered by the CAB-83xx cable.

The presence sensor is connected and powered through the CBX by the scanner and is unique to the system. There is only a single reading phase and a single message from the master reader to the Local Host. The **On-Line** operating mode is used for this layout.

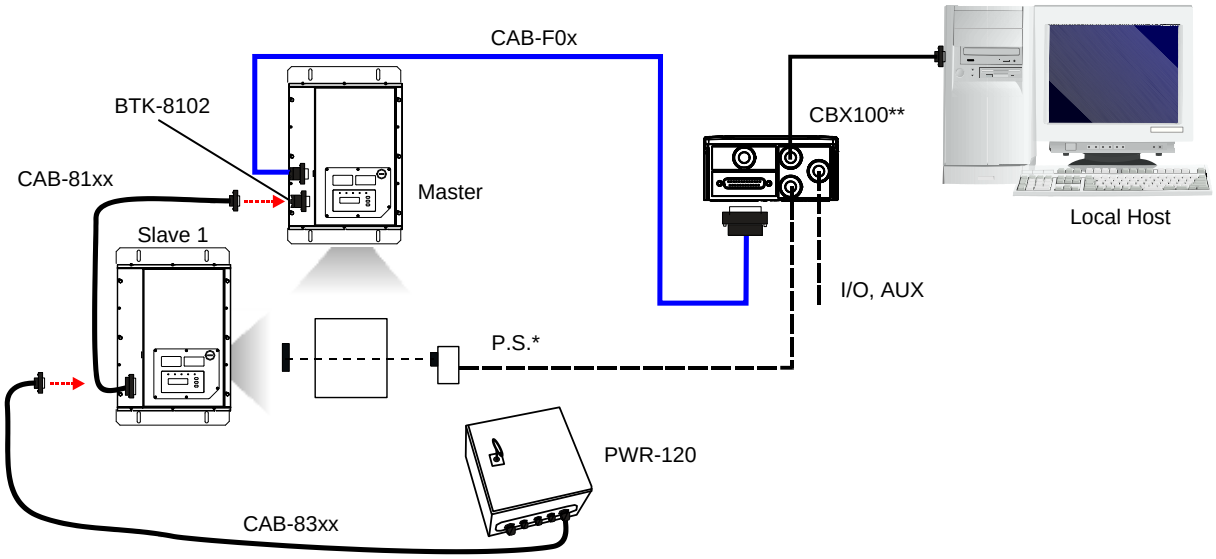

* P.S. (Presence Sensor) connected to Input 1 (External Trigger/PS) input.

** CBX100 jumper set to accept scanner power.

Figure 66 – Small Synchronized Network with 2 Readers

The following image shows a system consisting of five readers where the external signals (trigger/PS, encoder, serial to host, etc.) are connected to the master through the CBX100.

The system is powered by the PWR-240 where:

- the master is connected through CAB-86xx, which also provides bus termination
- the last slave is connected through CAB-83xx, which also provides bus return.
- the master and all slaves are connected together through the CAB-81xx cables

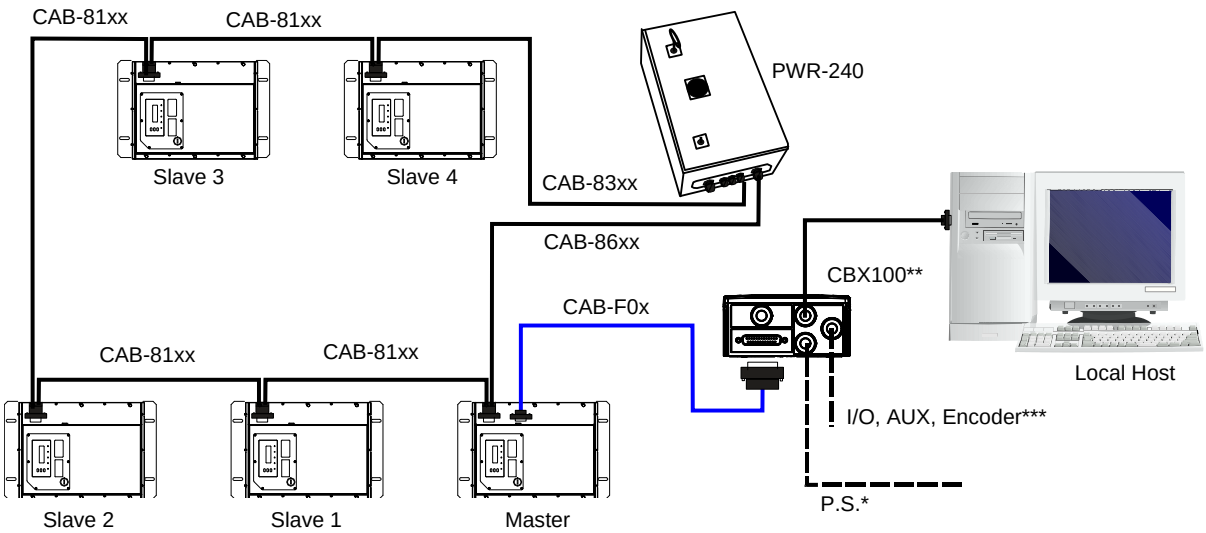

* P.S. (Presence Sensor) connected to Input 1 (External Trigger/PS) input.

** CBX100 jumper set to accept scanner power.

*** Encoder connected to Input 2 (Encoder) input.

Figure 67 – Small Synchronized Network with more than 2 Readers and Single Power Unit

7.1.2 Large Synchronized Network

When building a large local Lonworks network (more than 10 scanners), an SC6000 Controller must be used together with a PWO power supply/junction box unit. In this case the SC6000 unit acts as the system master and is connected to the host through one of its interfaces.

All scanners act as slaves and are connected to the SC6000 through the PWO power supply/junction box. For DX8200A scanners, 4 branch connectors provide Lonworks communications between the scanners and the SC6000 unit. The last scanner on the line requires a Termination connector as well as any unused branches in the PWO unit.

The allowed maximum bus length is 65 m.

External devices such as a presence sensor and an encoder are all connected to the PWO.

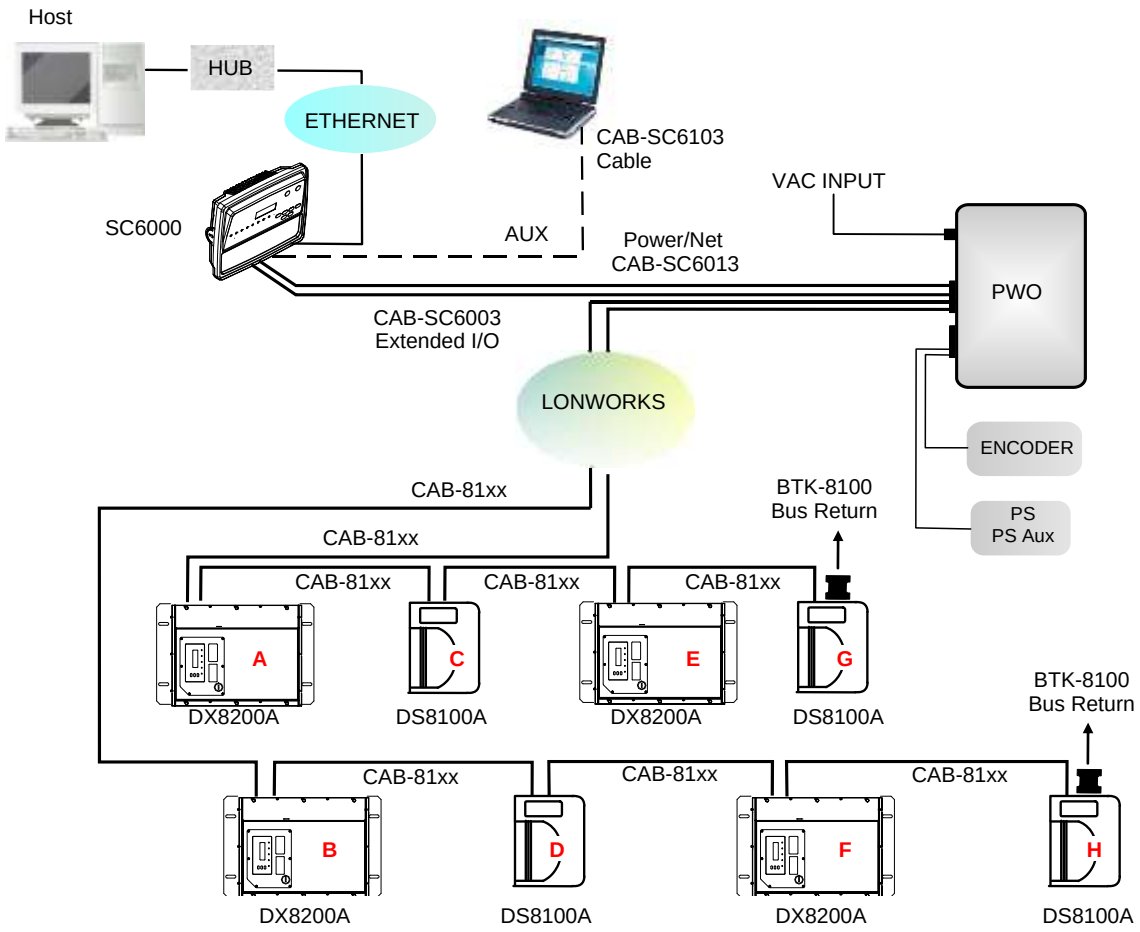

Figure 68 – Large Synchronized Network with DX8200A and DS8100A Scanners

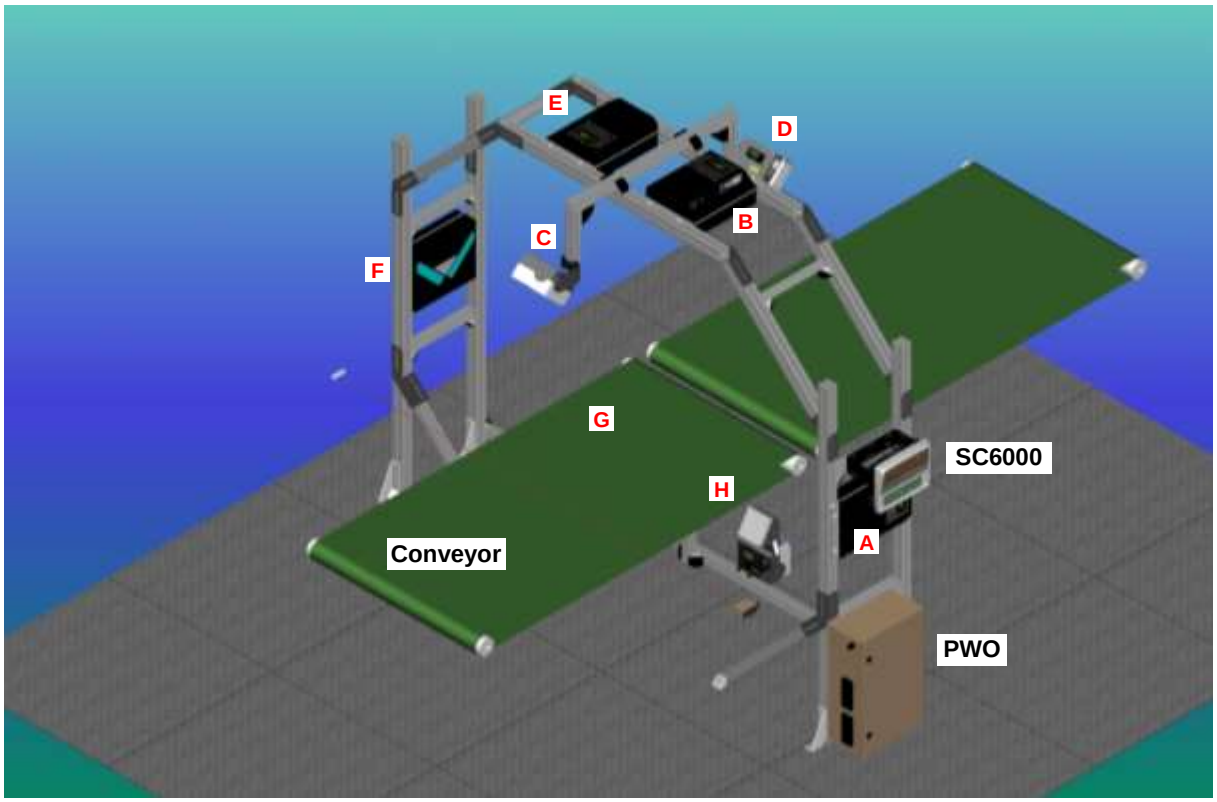

Figure 69 – Example Large Synchronized Network Reading Station

Here are a few helpful hints which can improve station performance and reduce installation time:

1. Scanner distribution should alternate between odd and even branches so that the station guarantees 50% reading on all sides. See also Figure 68.

2. For OEK Encoders set the parameter Operating Mode>Encoder Step = 252.

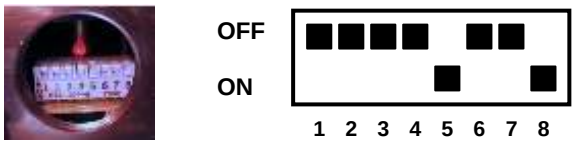

3. For Top Front and Top Back scanners (**C** and **D** in Figure 69), set the parameter Reading Parameters>Reading Condition = Skew 45°.

4. For applications having regular shaped packs the default settings are sufficient, but for Airport applications, irregular shaped packs can cause PS signal glitches resulting in false "packs too short" or "packs too close" errors.

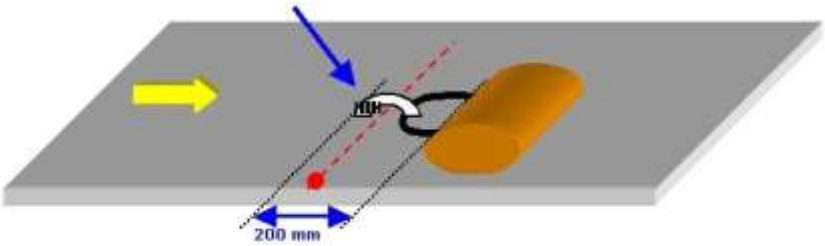

To correct this, set the following Operating Modes parameters: Minimum Distance Between Packs = 200 mm, Minimum Pack Length = 200 mm, Window Dimension = 200 mm.

7.1.3 Redundant System

For large local Lonworks networks, a redundant system can per configured in which two SC6000 Controllers are used together with their respective PWO power supply/junction box units. The scanners are distributed equally between the PWO units. In this case one of the SC6000 Controllers is dedicated as the working or active unit while the other functions as a dedicated protecting or backup unit.

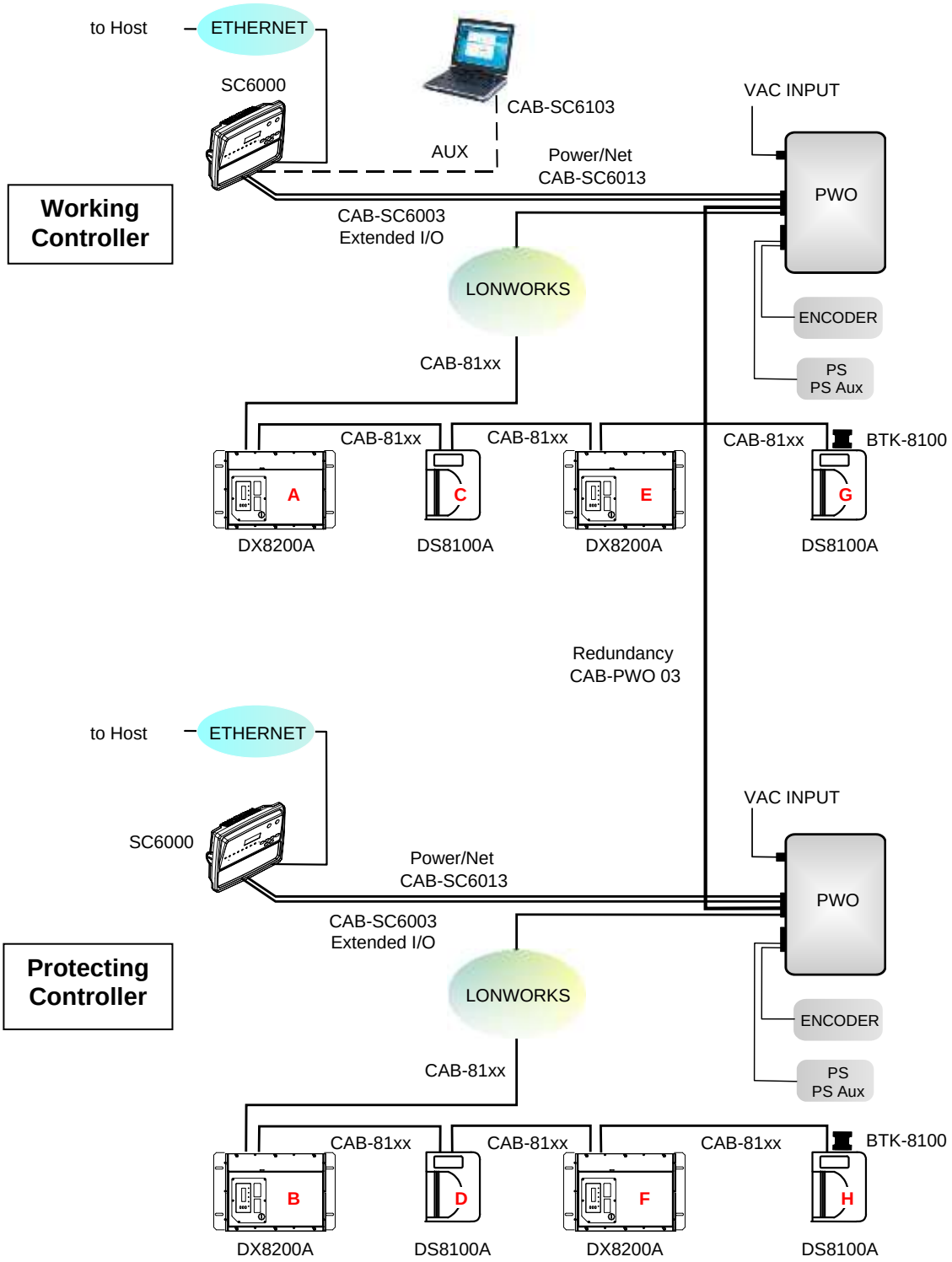

Figure 70 - Redundant Reading Station Layout with DX8200A and DS8100A Scanners

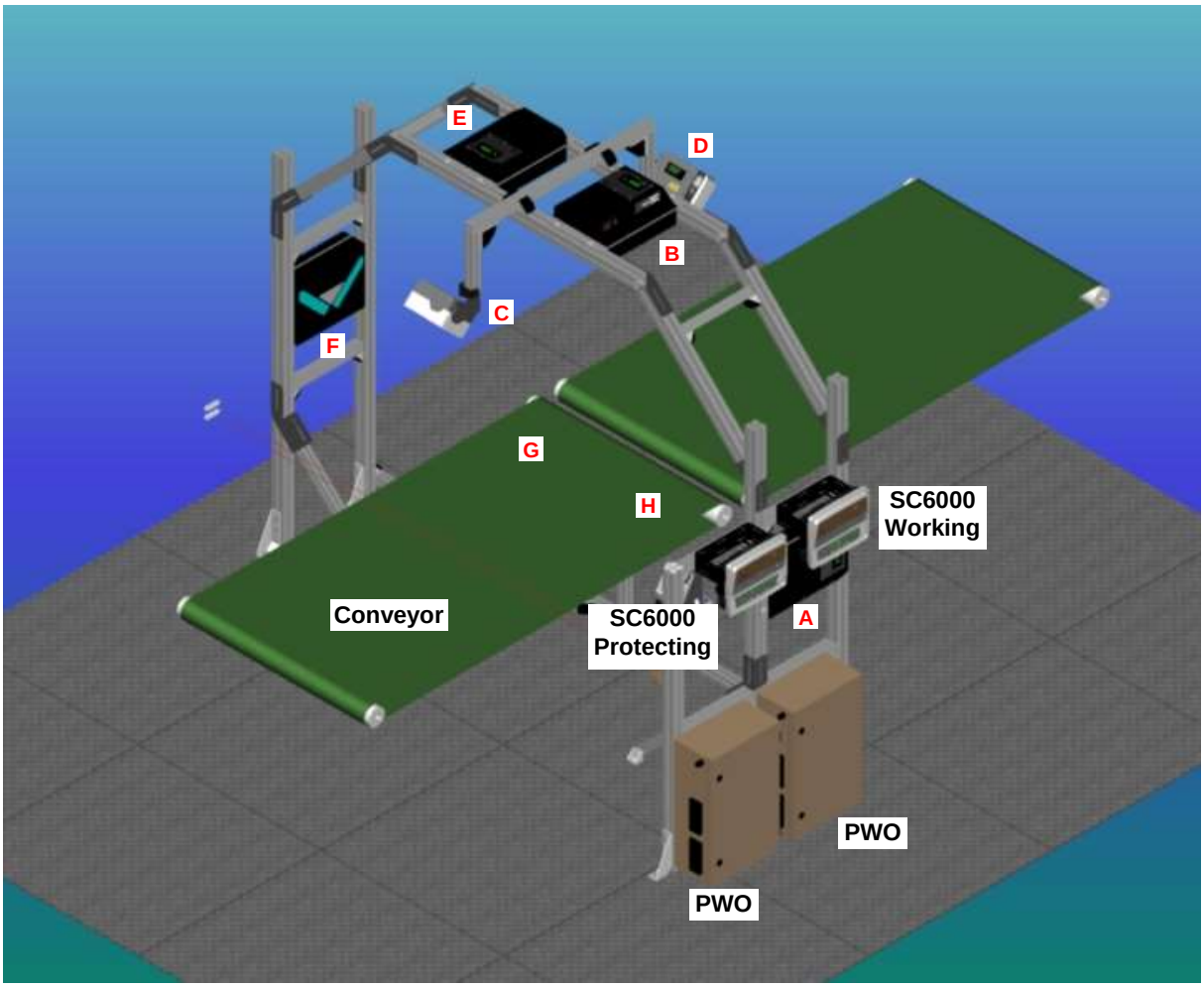

Figure 71 – Example Redundant Reading Station

7.1.4 Multidata Network

In this layout, one master and up to 7 DX8200A slave readers have their own P.S. and therefore multiple reading phases. Each P.S. is connected through a CBX100, which in turn is connected to its relative scanner through a CAB-F0x cable.

The master sends all the individual messages collected from the Lonworks interface as well as its own to the Local Host through its CBX100.

The following image shows a system consisting of four readers, which are all connected together using CAB-81xx cables and the system is powered by a PWR-240 power supply.

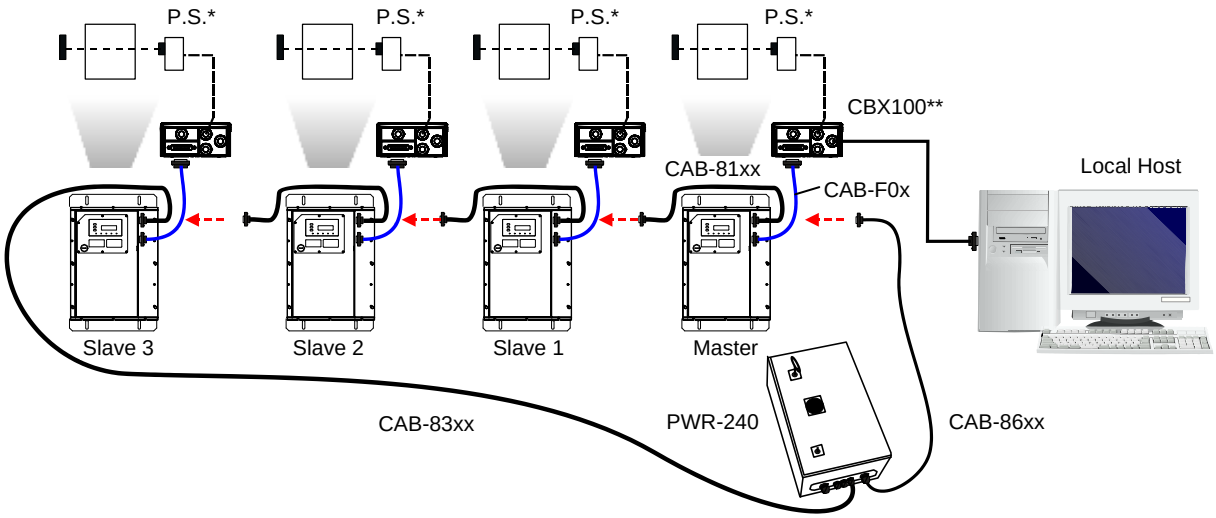

* P.S. (Presence Sensor) connected to Input 1 (External Trigger/PS) input.

** all CBX100s have jumper set to accept scanner power

Figure 72 – Multidata Network

7.1.5 Fieldbus Networks

The Fieldbus models (Ethernet, Profibus, DeviceNet) offer connectivity without any converter or adapter needed.

The DX8200A Lonworks master communicates as a Fieldbus slave to a remote host (i.e. remote PC connected via Internet or PLC Fieldbus Master) by means of a cable connected to the Fieldbus connector provided. It can be activated by a signal generated by the remote Host or by a physical presence sensor.

The external signals (trigger/PS, encoder) are connected to the master through the CBX100.

The system is powered by the PWR-240 where:

- the Lonworks master is connected through CAB-86xx, which also provides bus termination
- the last Lonworks slave is connected through CAB-83xx, which also provides bus return.
- the Lonworks master and all Lonworks slaves are connected together through the CAB-81xx cables

The same network layouts are available as for the DX8200A Standard model.

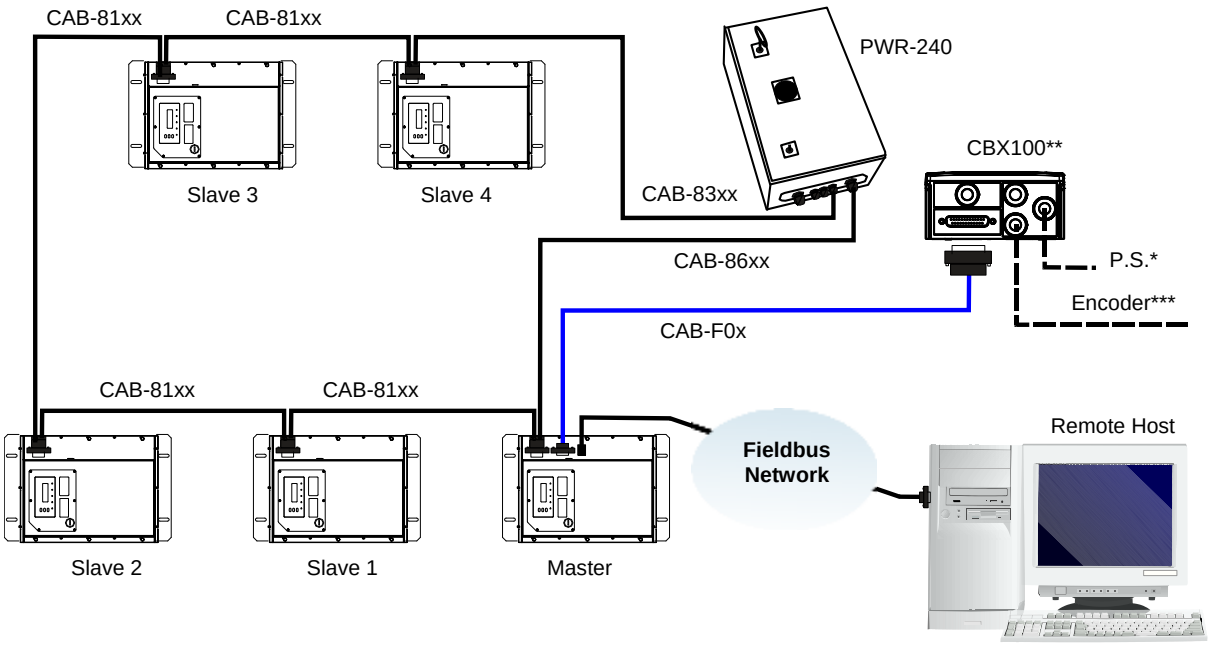

* P.S. (Presence Sensor) connected to Input 1 (External Trigger/PS) input.

** CBX100 jumper set to accept scanner power.

*** Encoder connected to Input 2 (Encoder) input.

Figure 73 – Fieldbus Small Synchronized Network

NOTE

To interface DX8200A scanners to other Host types (Fieldbus and non-Fieldbus), use the CBX800 Gateway with Host Interface Modules.

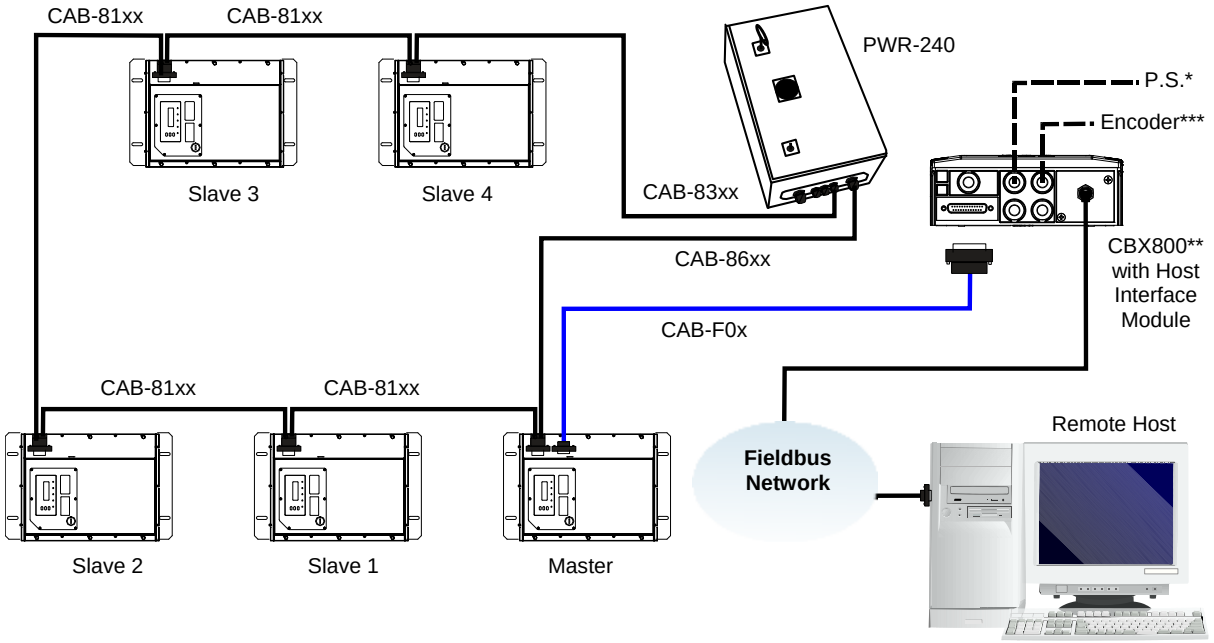

* P.S. (Presence Sensor) connected to Input 1 (External Trigger/PS) input.

** CBX800 jumper set to accept scanner power.

*** Encoder connected to Input 2 (Encoder) input.

Figure 74 – Fieldbus Small Synchronized Network

The following Host Interface Module accessories are available for the CBX800 Gateway:

Name	Description	Part Number
BM200/210	Ethernet TCP/IP Module STD/IP65	93ACC1851, 93ACC1852
BM300/310	Profibus Module STD/IP65	93ACC1810, 93ACC1811
BM400	DeviceNet Module IP65	93ACC1814
BM500/510/520	Ethernet/IP Module STD/IP65/IP54	93ACC1812, 93ACC1813, 93ACC1840
BM600	CANopen Module STD	93ACC1815
BM700/710	Profinet Module STD/IP65	93ACC1816, 93ACC1886
BM1100	CC-Link Module STD	93ACC1845
BM1200/1210	Modbus TCP STD/IP65	93ACC1848, 93ACC1849

8 SOFTWARE CONFIGURATION

8.1 GENIUS™ INSTALLATION

Genius™ is a new Datalogic scanner configuration tool providing several important advantages:

- Wizard approach for new users;
- Multi-language version;
- Defined configuration directly stored in the reader;
- Communication protocol independent from the physical interface allowing to consider the reader as a remote object to be configured and monitored.

To install Genius™, proceed as follows:

1) Turn on the PC that will be used for configuration, running either Windows 98, 2000/NT, XP, Vista or 7;
2) Insert the Genius™ CD-ROM;
3) Wait for the CD to autorun and follow the installation procedure.

8.2 GUIDE TO RAPID CONFIGURATION

8.2.1 Wizard for Quick Reader Setup

After installing the Genius™ software program (see above), and running it, the following window appears asking the user to choose the desired configuration level:

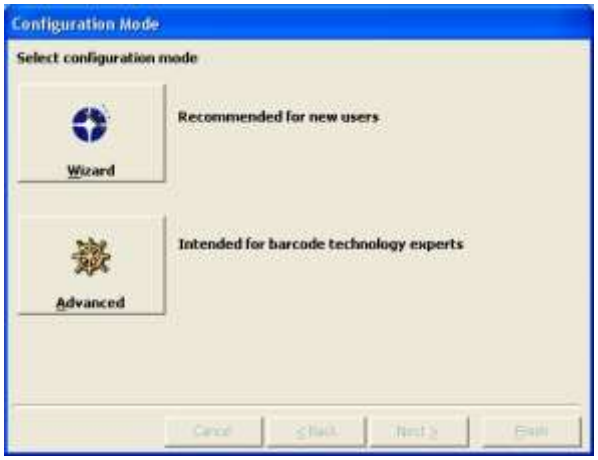

Figure 75 - Genius™ Wizard Opening Window

The Wizard option is advised for new users, since it shows a step-by-step scanner configuration. The parameters to be defined are the following:

- Barcode selection and definition;
- Operating mode selection and definition (see sub-paragraphs for further details);
- Digital Inputs/Outputs configuration;
- Hardware interface selection;
- Output data format configuration.

After defining the parameter values the following window appears allowing to complete the reader configuration as follows:

- Saving the configuration to disk;
- Switching to Advanced mode;
- Sending the configuration to the scanner.

Figure 76 - Genius™ Wizard Closing Window

Test Operating Mode

NOTE	*This operating mode is not available when DX8200A works as slave.*

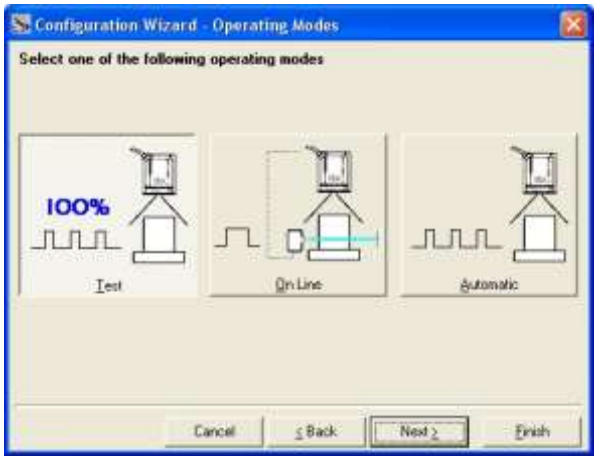

Figure 77 - Test Mode Selection

This operating mode causes the reader to be continuously activated allowing to verify its reading features and its reading position with respect to the barcode. For this reason, it is particularly advised during the installation phase of the reader.

After 100 scans, the values relative to an internal counter and the decoded code are displayed and transmitted on the serial interface. The counter reports the percentage of good reads of the label.

On Line Operating Mode

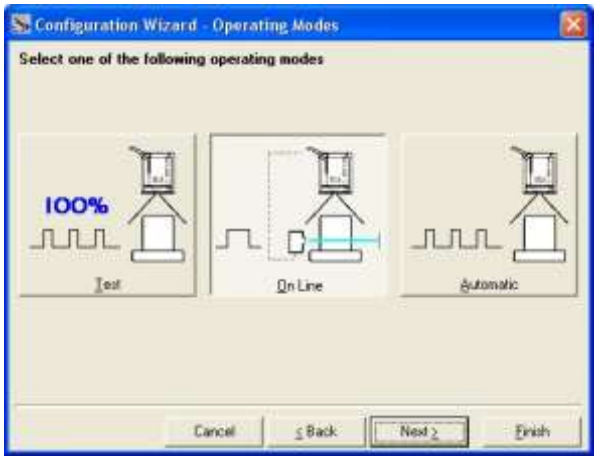

Figure 78 - On Line Mode Selection

This operating mode causes the reader to be connected to an external Presence Sensor using I1A and I1B (External Trigger/PS) inputs.
During the active phase of the presence sensor, the DX8200A reader tries to acquire and correctly decode the code.
In case the decoding phase is successful, the barcode characters are transmitted on the serial interface. Otherwise, a no read message is sent.

Automatic Operating Mode

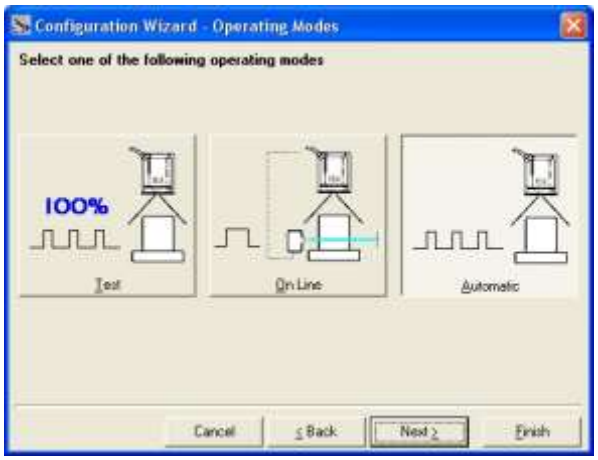

Figure 79 - Automatic Mode Selection

This operating mode does not require the connection to an external Presence Sensor.
When working in this mode the reader is continuously scanning. The reading phase is activated each time a barcode enters the reading zone. The reader stops reading after an N number of scans without a code. Barcode characters are transmitted on the serial interface. In case of a failed reading phase no message is sent to the host computer.

8.2.2 Genius™ Network Setup Through Master

Network Setup allows configuring your Local Lonworks Network through the Master using Genius™.

Three different procedures are available to define the number of network slave scanners, their label and address according to two main conditions:

Condition	Available Procedure	Feature
Unknown Slave Addresses	Net-Autoset	automatically assigns random addresses to slave or Stand Alone scanners.
Known Slave Addresses	Network Wizard	customizes the network (slave label and address definition and physical identification of a specific slave within network), updates configuration to a file and makes it ready to be sent to the Master.
	Express Network Setup	automatically performs all the operations of the Network Wizard apart from the physical identification of a specific slave scanner.

NOTE

The Network Setup procedure as described requires Genius™ software version 1.06 or later. In addition, the Net-Autoset procedure requires scanner software version 6.40 or later.

1. **The first operation** to perform is the configuration of your **scanner as "Master**" from the Local Device Network Settings item in the Device Menu, see figure below:

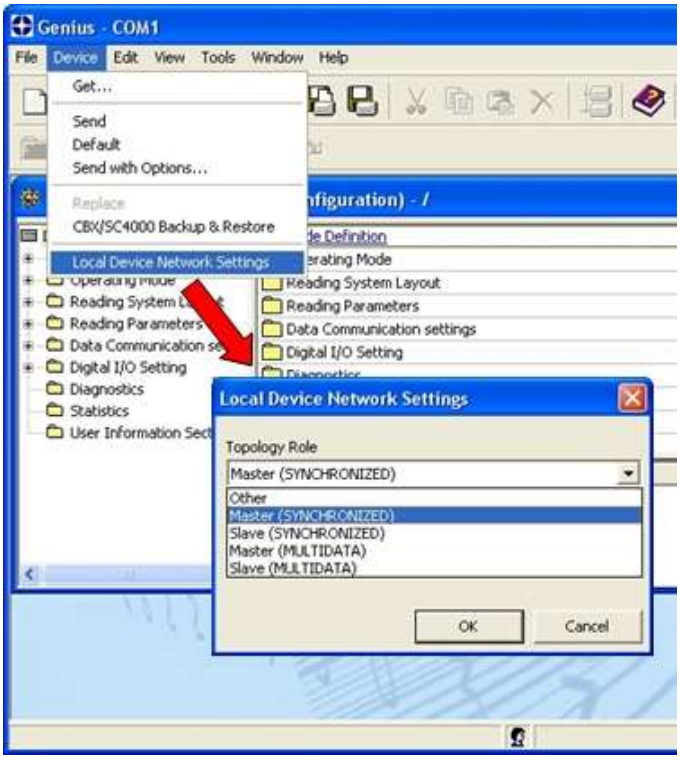

Figure 80 – Local Device Network Settings

The following dialog box appears asking whether to send the configuration to the Local Device or not:

2. Click the "Yes" button, then click on the icon available on the Toolbar to make the "Devices" area appear next to the Parameter Explorer window. By repeatedly clicking the icon this area will be displayed or hidden.

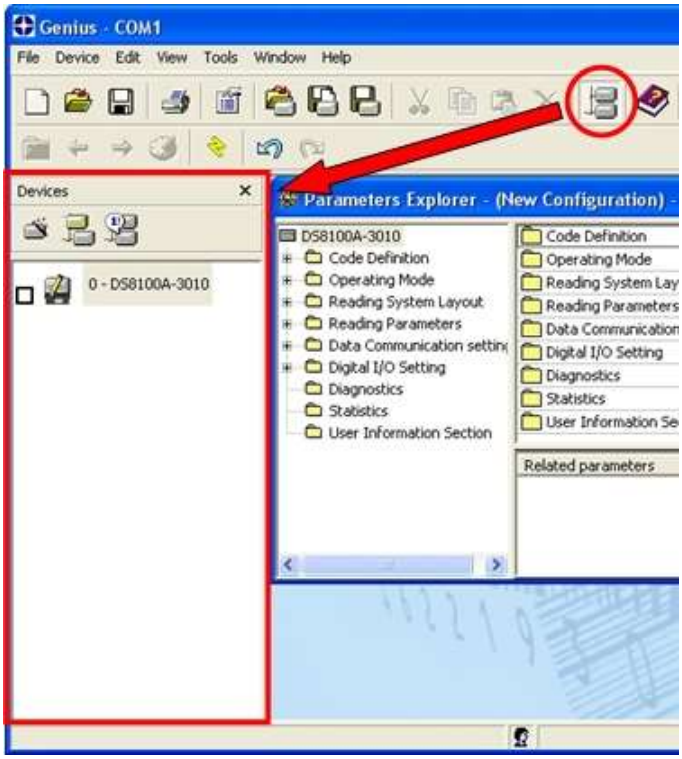

Figure 81 – Cluster Configuration

Each scanner of the cluster is indicated by the following graphical objects:

- check box allowing to select/deselect a specific scanner to perform the desired operations (i.e. program downloading);
- icon representing the scanner status;
- a label reporting information transmitted by the scanner when connected (the scanner address, generated errors, scanner description).

3. **Then, proceed with the network setup** by using one of the icons available on the Tool Bar according to the procedure to follow:

= Net-Autoset procedure

= Network Wizard procedure

= Express Network Setup procedure

Net-Autoset

This procedure is to be used when all scanner addresses and labels are unknown (typically when configuring the network for the first time or whenever a network reconfiguration is required).

By clicking the icon or selecting the "Net_Autoset" option from the right-click menu, the Net-Autoset procedure is started allowing automatic assignment of random addresses to all slave or Stand Alone scanners connected within the network.
Once the procedure has been completed, it is possible to:

- define customized addresses and labels through the Network Wizard;
- display the scanner default labels through the Express Network Setup.

Express Network Setup

Before performing this procedure, a Lonworks address must be assigned to each slave scanner. The most practical method is through the Net-Autoset procedure. See par. 8.2.3 for alternative address assignment methods.

Once all addresses have been assigned, the Express Network Setup is to be used when all scanner addresses and labels do not need to be modified.

By clicking on the icon or by choosing the related option from the right-click menu, the procedure is started which automatically performs the following operations:

- opening the wizard;
- polling the network to discover connected scanners;
- transferring all scanners found to the "Requested Devices" area of the wizard where your network customization is defined;
- saving the new network configuration;

Once the procedure has been completed, a dialog box will appear asking whether to send the configuration to the Master. Choose the “Yes” option to start this procedure.

Network Wizard

Before performing this procedure, a Lonworks address must be assigned to each slave scanner. The most practical method is through the Net-Autoset procedure. See par. 8.2.3 for alternative address assignment methods.

Once all addresses have been assigned, the Network Wizard is to be used when one or more scanner addresses and labels need to be modified.

1. Click on the button to open the Network Wizard dialog box:

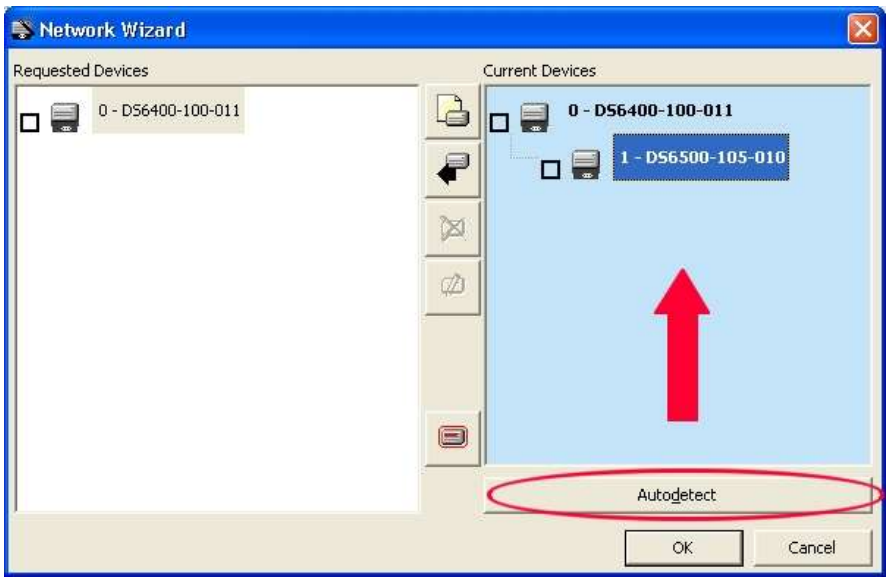

a. if the slave scanners have already been configured and wired to the network, click on the Autodetect button to start a polling procedure of the current network. All slave scanners found will be represented in the “Current Devices” area. Then, select the desired slave scanner from the “Current Devices” area and click on the icon (or drag and drop) to transfer it to the “Requested Devices” area where your network customization is defined. The following dialog box will appear allowing (if necessary) to change the slave address ("Available Device" field) and label ("Description" field):

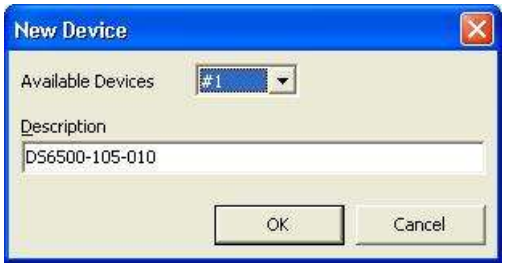

b. if the slave scanners have not been configured and wired to the network, click on the icon to add a new device defining its address and model. The added slave scanner will be displayed in the “Requested Devices” area. This option in any case requires that all slave scanners have their address set before the network can function.

2. If desired, select a slave scanner within the "Current Devices" area and click on the icon (or select the "Show Device" option from the right-click menu) to make the dialog box appear as follows:

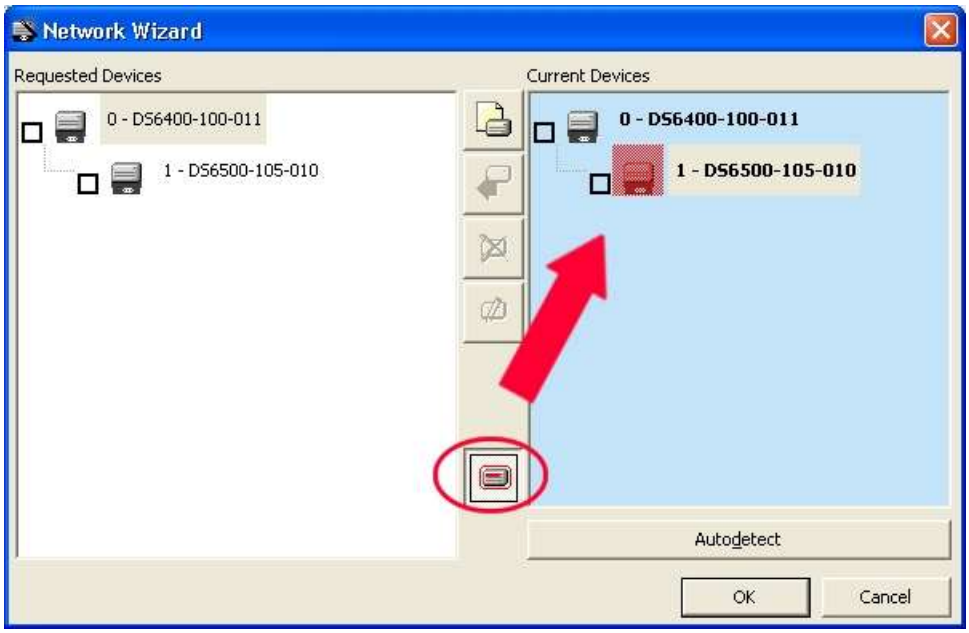

The "Show Device" option is particularly useful after the Net-Autoset procedure or whenever it is necessary to know which address is assigned to a specific slave scanner. Indeed, it activates the following signals which physically indicate the scanner corresponding to the one selected, in particular:

- in Network Wizard the icon corresponding to the selected slave scanner starts blinking red;
- in the Physical Network all slave scanner lasers turn off except the one of the selected scanner which turns on.

3. If desired, select the transferred/added slave scanner within the “Requested Devices” area and click on the icon to customize the scanner label and address.

4. Once your network has been customized, close the network wizard. Before closure, the program will show a dialog box asking whether to send the new configuration to the Master. Choose the “Yes” option to start this procedure.

8.2.3 Alternative Slave Address Assignment

As alternatives to Network Setup through the Master, each Slave scanner can be assigned an address through the following methods:

- address setting through the Local Device Network Settings item in the Device Menu with the slave scanner connected to Genius™

- manual address setting through slave scanner keyboard (see par. 1.5.1 for details)

8.3 ADVANCED GENIUS™ CONFIGURATION

The ADVANCED selection available when starting the Genius™ program is addressed to expert users being able to complete a detailed scanner configuration. By choosing this option it is possible either to start a new scanner configuration or to open and modify an old one. The desired parameters can be defined in the following window, similar to the MS Explorer:

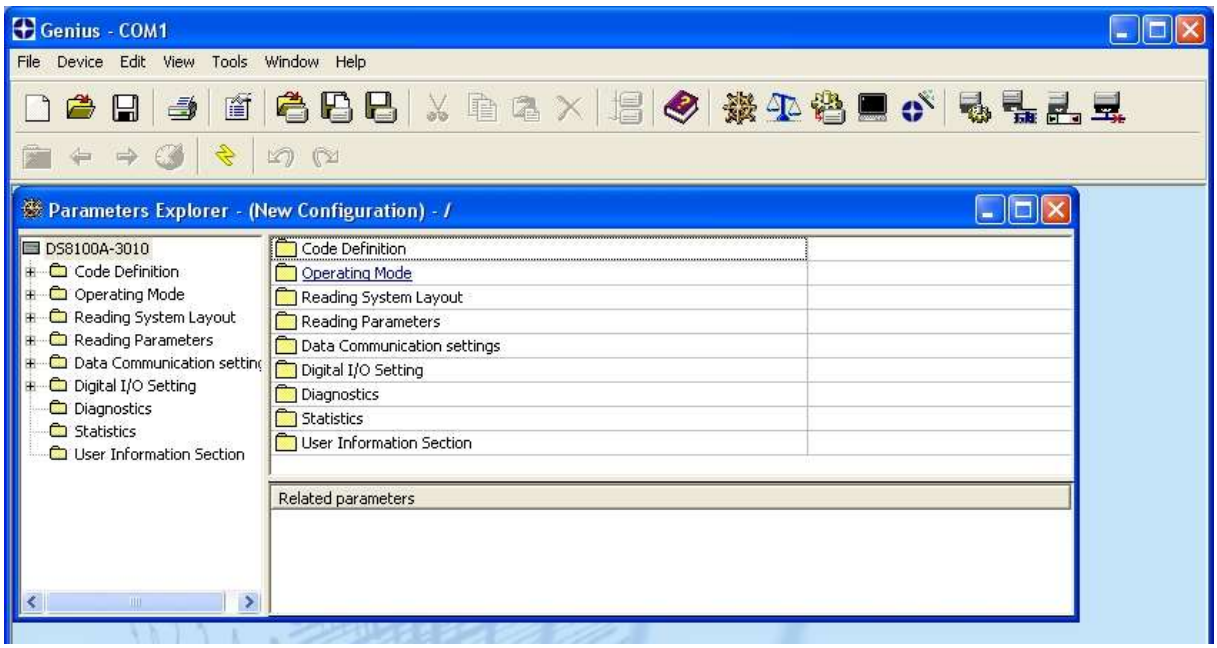

Figure 82 - Genius™ Parameter Explorer Window

The procedure for setting the scanner parameters is supported by a Help On-Line, which is displayed in an HTML browser. It can be selected from the Configuration Help option available in the Help menu. In addition, a context-sensitive help can be enabled by pressing the <F1> key after selecting the desired parameter.

8.3.1 Genius™ Shortcuts for Network Configuration

Once the Network Setup is structured in Genius and the Master is configured, there are a few shortcuts that Genius offers to quickly configure the slaves.

By right-clicking on a device in the "Devices" area a shortcut menu appears which allows you to:

- Copy the device configuration
- Paste a previously copied configuration
- Copy the Master device configuration parameters to all Slaves (only common parameters relative to Slave functioning, i.e. Code Definition, Diagnostics, etc.)
- Show Device to physically locate a scanner in the station

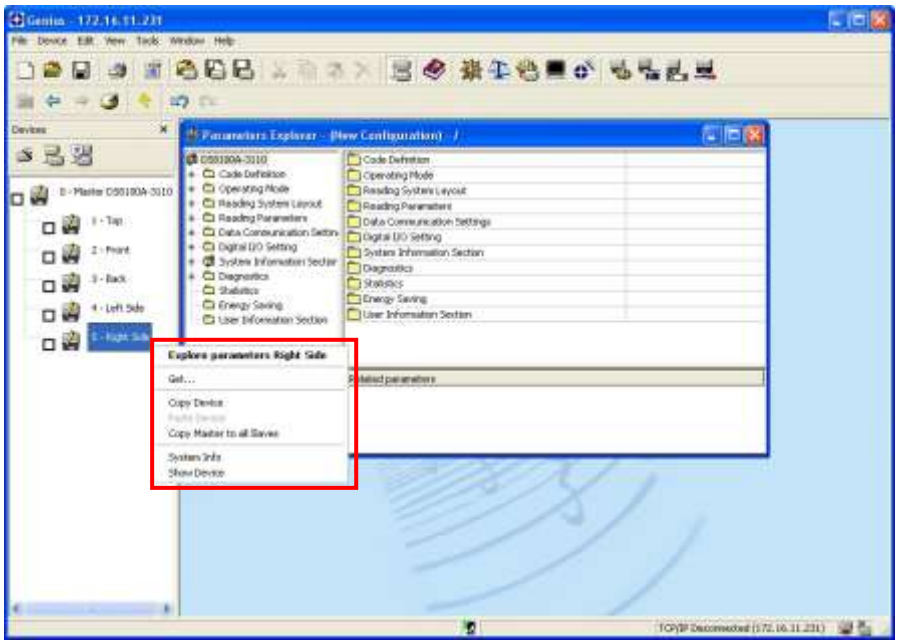

These shortcuts are made only in Genius™ and require sending the configurations to the scanners to be saved.

It is possible to Paste, Send or Load configurations simultaneously[1] to a selected number of devices by clicking the relative device check box and executing the desired command.

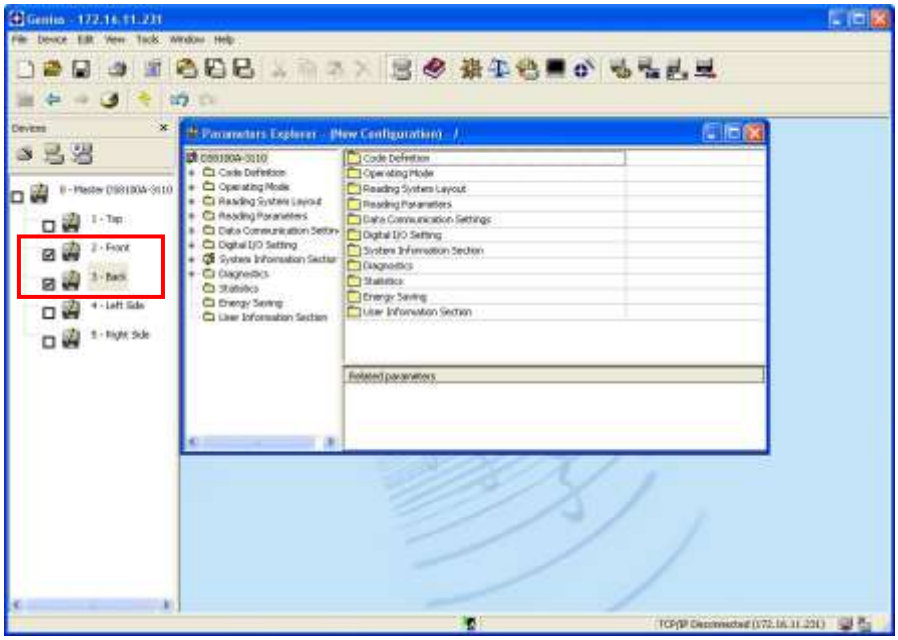

These same functions[2] can be selected from the Edit menu as well.

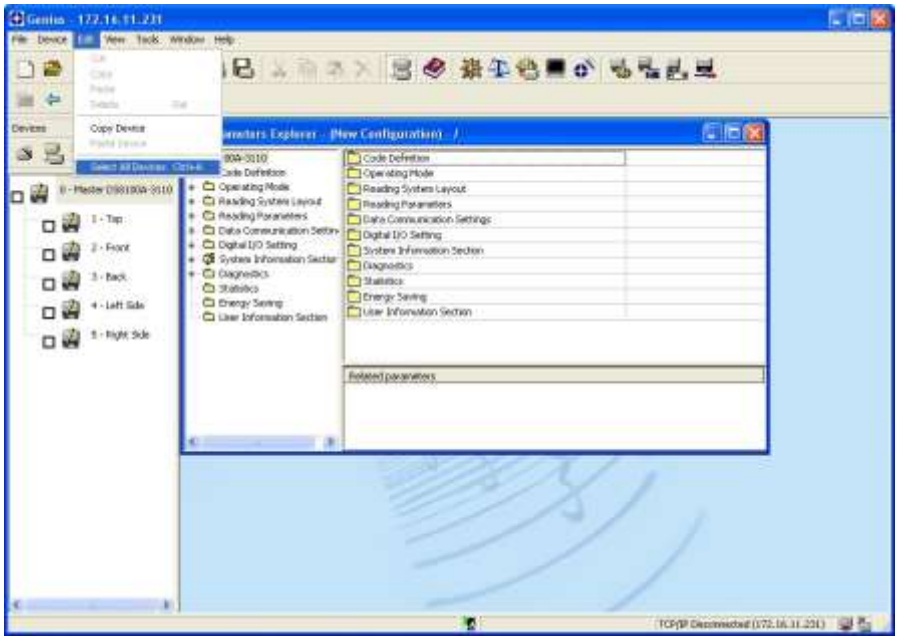

[1] Not for Master and Slaves simultaneously.

[2] Not for Master and Slaves simultaneously. If using the "Select All Devices" menu item, uncheck either the Master or all slaves.

8.4 PARAMETER DEFAULT VALUES

The following table contains the list of the factory default settings for the DX8200A.
Genius™ also allows checking the parameter default values by selecting the "Compare parameters" option available in the Tools menu and comparing the current scanner configuration to the default one.

Parameter	Default Setting
Code Definition	
Code Combination	Single Label
No Read Message	Global No Read Message
No Read String	<CAN>
Multi Filters	Disabled (unchecked)
Code Label Settings #1	
Code Symbology	Interleaved 2 of 5
Label Length	8
Min Code Position	0
Max Code Position	255
Check Digit	Disabled (unchecked)
Decoding Safety	1
Decoding Severity	3
Match String Rule	Match
Pattern Match String	Empty
Match Direction Rule	Disable
Code Label Settings #2	
Code Symbology	Code 39
Label Length	Variable
Minimum Label Length	1
Maximum Label Length	60
Min Code Position	0
Max Code Position	255
Check Digit	Disabled (unchecked)
Decoding Safety	1
Decoding Severity	3
Match String Rule	Match
Pattern Match String	Empty
Match Direction Rule	Disable
Operating Modes	
Operating Mode Selection	On Line
On Line Options	On Line 1 Input
Start Input Number	1
Start Input Active Level	Active Closed
Reading Phase Timeout	Disabled (unchecked)
Start Input from Bus	Disabled (unchecked)
Protocol Index	Disabled (unchecked)
Verifier	Disabled (unchecked)

Parameter	Default Setting
Reading System Layout	
Device Assignment	Alone
Modify&Backup Lon Slave Configuration	Disabled (unchecked)
Enable A.S.R.	Disabled (unchecked)
Reading Parameters	
Beam Shutter	Disabled
Overflow Start Ratio	5
Overflow Stop Ratio	5
Reading Mode	Reconstruction
Reading Condition	Standard
Reconstruction Parameters	
Enabled Stacked Code	Disabled (unchecked)
Extended	
Min Match	0
Position Tolerance	50
Duration Tolerance	50
Min Start/Stop Number	2
Inter Char Gap	8
Addon Start/Stop Overflow Ratio	2
Max distance between EAN/UPC and Addon (in modules)	20
Scan Line Amplitude	
Amplitude Settings Enable	Disabled (unchecked)
PackTrack Calibration	
Direction	0 (Forward)
PS Offset	0
Data Communication Settings	
Host Application Protocol Type	Standard
Data Format	
Header Tx Start	With Data
Termination After No Read Message	Enabled (checked)
Message Tx Selection	On Decoding
Format Type	Standard
Max. Tx Delay After Phase Off	Disabled
Code Identifier	Disabled
Standard Parameters	
Header String	<STX>
Code Position Tx	Disabled (unchecked)
Code Direction Identifier Enable	Disabled (unchecked)
Termination String	<CR><LF>
Data Packet Separators	<CR><LF>
Code Field Length Setting	Variable Length
Main Serial Port	
Main Serial Interface Dedicated to ID-NET	Disabled (unchecked)
Data Tx	Enabled (checked)
Heartbeat	Disable

Parameter	Default Setting
Main Serial Port Parameters	
Main Port Communication Mode	Standard
Main Port Electrical Interface	RS232
Handshake	None
Baud Rate	9600
Parity	None
Data Bits	8
Stop Bits	1
Auxiliary Serial Port	
Search for CBX BM100 at Device Startup	Enabled (checked)
Data Tx	Enabled (checked)
Heartbeat	Disable
Pass Through	Disabled (unchecked)
Auxiliary Serial Port Parameters	
Baud Rate	115200
Parity	None
Data Bits	8
Stop Bits	1
Digital I/O Setting	
Digital Input Lines Setting	
Debouncing For Input 1, 3 and 4	5ms
Debouncing For Input 2	500 µs
Input 1 Active Level Overridden by Op. Mode	Active Closed
Input 2 Active Level Overridden by Op. Mode	Active Closed
Input 3 Active Level Overridden by Op. Mode	Active Closed
Input 4 Active Level Overridden by Op. Mode	Active Closed
Output 1	
Line State	Normally Open
Activation Event	Complete Read
Alternative Activation Event	Wrong
Deactivation Event	Timeout
Alternative Deactivation Event	None
Activate on any Diagnostic Error	Disabled (unchecked)
Deactivate when all Diagnostic Errors Recovered	Disabled (unchecked)
Deactivation Timeout (ms)	50
Output 2	
Line State	Normally Open
Activation Event	No Read
Alternative Activation Event	Partial Read
Deactivation Event	Timeout
Alternative Deactivation Event	None
Activate on any Diagnostic Error	Disabled (unchecked)
Deactivate when all Diagnostic Errors Recovered	Disabled (unchecked)
Deactivation Timeout (ms)	50

Parameter	Default Setting
Output 3	
Line State	Normally Open
Activation Event	None
Alternative Activation Event	None
Deactivation Event	None
Alternative Deactivation Event	None
Activate on any Diagnostic Error	Disabled (unchecked)
Deactivate when all Diagnostic Errors Recovered	Disabled (unchecked)
Diagnostics	
PackTrack Debug Message Tx	Disabled (unchecked)
Enable	Enabled (checked)
Conveyor Info	Not Available
Refresh Time	2 sec
Local Network Failure	Enabled (checked)
No Scan	Enabled (checked)
No Sync	Enabled (checked)
No Phase Timeout	Disable
DIGITIZER: Motor Warning	Enabled (checked)
DIGITIZER: Motor Failure	Enabled (checked)
DIGITIZER: Motor Life End	Enabled (checked)
DIGITIZER: Laser Failure	Enabled (checked)
DIGITIZER: Laser Life End	Enabled (checked)
Actions	
Tx Mode	On Timeout
Tx Refresh	2 sec
Aux	Disabled (unchecked)
Main	Disabled (unchecked)
Format	
Header String	<STX>
Terminator String	<CR><LF>
Error Message Type	Numeric
Statistics	
Enable	Enabled (checked)
Separator	<space>
Time (hh mm)	Disabled (unchecked)
Phase Counter	Disabled (unchecked)
Good Read Counter	Disabled (unchecked)
Partial Read Counter	Disabled (unchecked)
No Read Counter	Disabled (unchecked)
Multiple Read Counter	Disabled (unchecked)
Energy Saving	
Energy Saving Configuration	Disabled (unchecked)

Parameter	Default Setting
User Information Section	
End User Name	Empty
Device Name	Empty
Line Name	Empty

9 READING FEATURES

9.1 ADVANCED CODE RECONSTRUCTION (ACR™ 4)

The traditional way of barcode reading could be called “Linear Reading”. In this case, the laser beam crosses the barcode symbol from its beginning to its end as shown in the following figure:

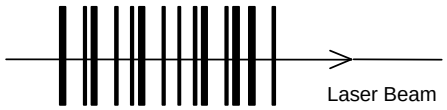

Figure 83 – Linear Reading

In Advanced Code Reconstruction mode it is no longer necessary for the laser beam to cross the label from the start to the end. With just a set of partial scans on the label (obtained using the motion of the label itself), the DX8200A is able to “reconstruct” the barcode. A typical set of partial scans is shown in the figure below:

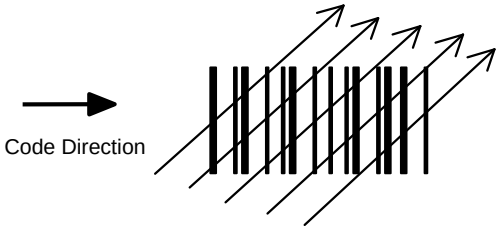

Figure 84 – Partial Scans

None of the partial scans contains the whole label. The decoder aligns each partial scan correctly and combines them in order to obtain the entire code.

This alignment is performed by calculating the time difference from one partial scan to another using a reference code element.

9.1.1 Tilt Angle for Advanced Code Reconstruction

The most important parameter in Advanced Code Reconstruction is the value of the maximum tilt angle (α maximum) under which the code reconstruction process is still possible.

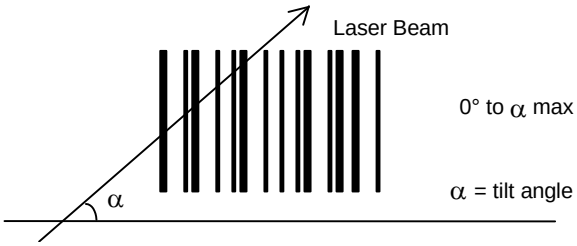

Figure 85 – Tilt Angle

The decoder will be able to read the label with a tilt angle between + α max and - α max as shown in the following figure:

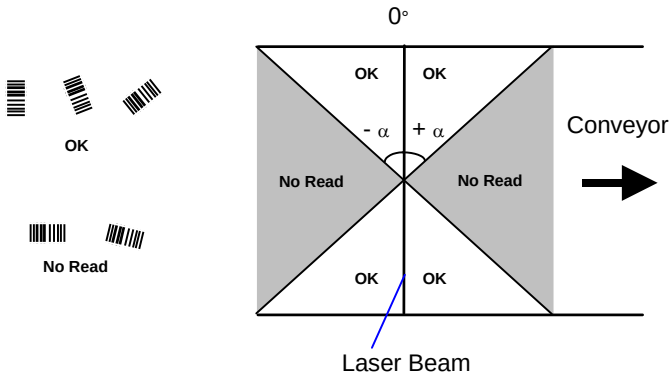

Figure 86 – Reading Zones with α Max

The formulas to calculate α maximum depend on various parameters such as: label height, number of scans per second, code motion speed, etc.

DX8200A scanners provide omni-directional reading by dividing the scan line into two legs which produce a cross pattern where angle α is fixed for each leg (see figure below). Since code reconstruction is used, minimum label heights at different conveyor speeds are given in the tables in par. 9.3.1 which guarantee omni-directional reading for your application.

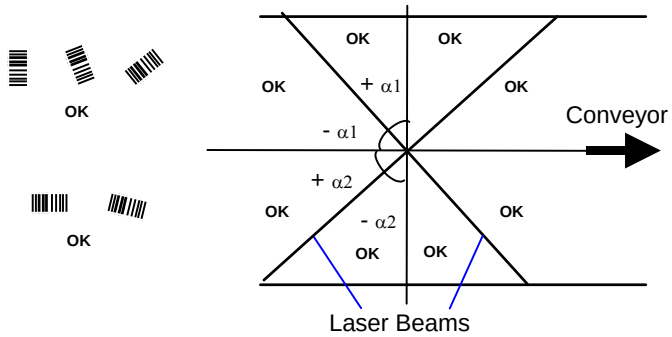

Figure 87 – Omni-Directional Reading with α Max

9.2 PACKTRACK™

PackTrack™ is a patented operating mode for Datalogic Omni-Directional Reading Stations used to correctly assign codes read on different packs when placed in the scanner Reading Area at the same time.

In fact, in the following example, the codes of two or more consecutive packs are found at the same time in the scanner reading area. Therefore, the condition occurs where, in the sequence of the two packs, the code of the second pack is read first, just before the code of the previous pack. A system without PackTrack™ would assign the code of the second pack to first pack and vice versa, thus causing a gross error in sortation.

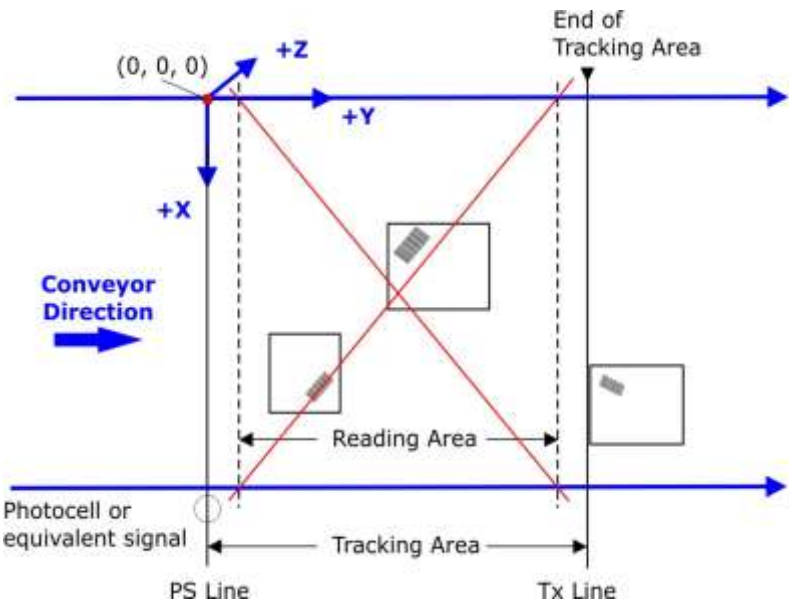

Figure 88 – PackTrack™ System Layout

Working in PackTrack™ mode requires the presence of an encoder and a presence sensor to track the moving packs.

For correct functioning, the PackTrack™ operating mode requires a calibration just after the installation of the scanners. This operation is absolutely necessary to accurately locate barcodes on a fixed reference system.

PackTrack uses a right-handed reference system (right hand with thumb = X axis; forefinger = Y axis; middle finger = Z axis) where the X axis coincides with the PS line, the Y axis coincides with the conveyor direction and the Z axis is oriented upwards from the conveyor (see figure below).

PackTrack™ Reference System

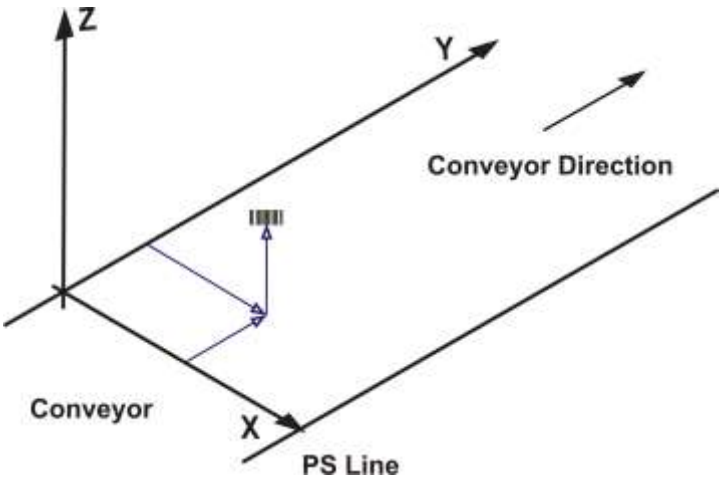

Figure 89 – PackTrack™ Reference System

This coordinate system is absolute for the reading station, i.e. is valid for all the scanners independently from their position or orientation with respect to the conveyor. For this reason, after the PackTrack™ calibration (and configuration) has been correctly performed, when a barcode is under the beam to be read by the scanners, its position is defined by the

coordinates of its central point, independently from which scanner is reading it. This can be verified using the Test mode in the SPY PackTrack Calibration dialog box (see par. 9.2.3).

Both Auto PackTrack Calibration using the DLAPC tool and Manual PackTrack™ Calibration using the SPY tool can be performed in Genius™ (refer to the following paragraphs and the Genius™ Help On-Line for details).

9.2.1 Auto PackTrack™ Calibration for Reading Station Using DLAPC

In a Master /Slave Reading Station working in PackTrack™ or Continuous operating mode, the entire Reading Station can be automatically calibrated using the DLAPC tool in Genius™. The following paragraphs detail the Conditions and Limits, Parameters, and Procedure to follow. This information is also given in the Help On-Line.

Auto PackTrack Conditions and Limits

The Conditions and Limits for Auto PackTrack Calibration are summarized here for convenience and are also integrated into the following procedure descriptions:

- The following scanners are supported by Auto PackTrack Calibration: DS6400 (*see note below), DX6400 (*see note below), DS8100A, DX8200A.
- Before performing the Auto PackTrack Calibration procedure, if a system reset or power reset is performed, wait for all the scanners to be available (up to 60 sec.) before proceeding.
- Operating Mode of the Master must be either PackTrack or Continuous.
- Code 128 codes must be enabled on the Master with Label Length set to variable.
- If the system Presence Sensor and Encoder are used, the correct Encoder Step value must be set on the Master and the Presence Sensor must be connected to the CBX100/500 Input 1.
- If instead the PPA-8000 Photocell Array is used, it must be connected to the CBX100/500 I1 and I2 inputs, **the following parameters must be disabled on the Master**: Physical Encoder for PackTrack or Use Encoder for Continuous, **and the Encoder, if present, must be physically disconnected**.
- DX scanners which are calibrated automatically cannot be automatically replaced by DX scanners with a previous sw version (earlier than 6.80). You must either update the old scanner software prior to substitution, or complete the calibration manually, after installation, by setting the PSOffset and Direction parameters.

NOTE	*The autofocus feature of DS6400 and DX6400 scanners makes Auto PackTrack Calibration difficult, therefore to assure that the procedure can correctly calibrate these scanners, it is necessary to set a fixed focus value which allows the scanner to read all the label positions useful for its calibration.*

Auto PackTrack Parameter Descriptions

By means of the software tool DLAPC, it is possible to perform the Auto PackTrack setup procedure for PackTrack™ and Continuous Operating Mode applications.

Select the "DLAPC" option from the Tools menu or click on the related icon on the Tool Bar to open the following dialog box:

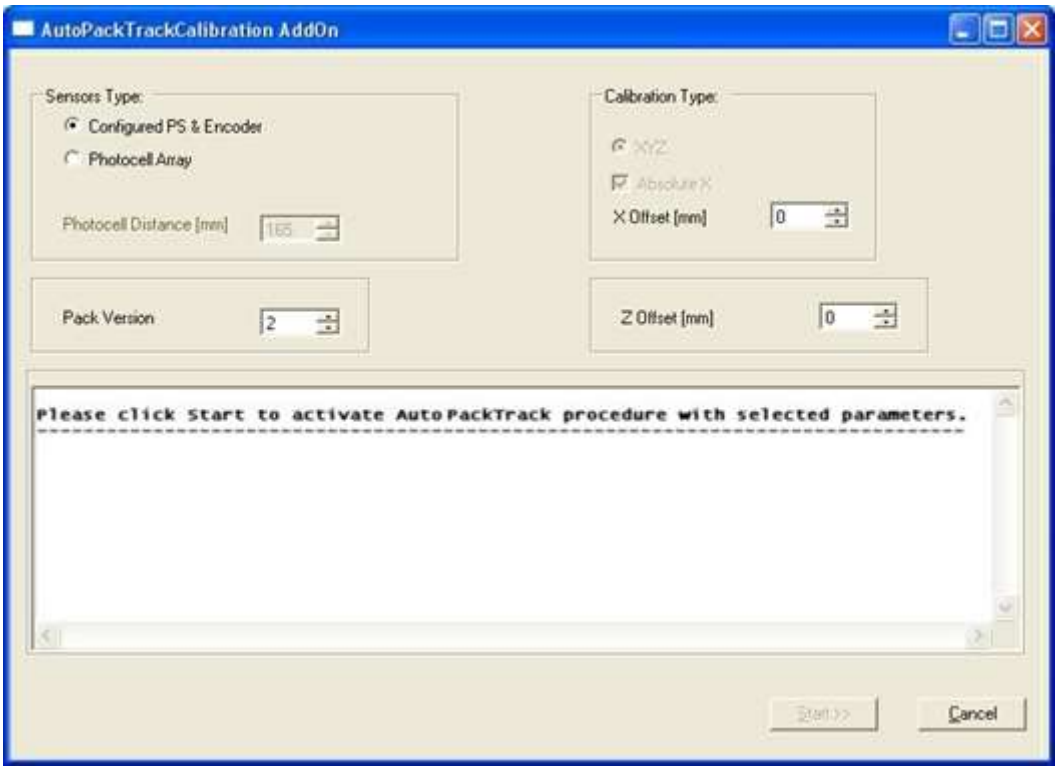

Once the DLAPC window has been opened, set the following parameters according to the application requirements:

Sensor Type: whether calibration will be performed using the system Presence Sensor and Encoder (most cases), or the PPA-8000 Photocell Array.

NOTE	*The Auto PackTrack procedure **requires** using the PPA-8000 Photocell Array for all systems where either the Presence Sensor or the Encoder are absent (including Continuous Operating Mode and Cargoscan applications).*

If using the Presence Sensor and Encoder, the presence sensor must be connected to the CBX100/500 I1 input. The Encoder Step parameter must also be set correctly.

If using the PPA-8000 you must set the Photocell distance (165 mm default). The Photocell Array must be connected to the CBX100/500 I1 and I2 inputs (see the relative installation manual), **and the Encoder, if present, must be disconnected**.

Pack Version: the version of the PCT-8000 being used for calibration. This value can be read from the barcode labels on the PCT-8000. Each label has the value *vnnn* where *v* is the version number.

Calibration Type: XYZ calibration with Absolute X position is forced. The coordinates for the three axes are calibrated. The X coordinate for all slaves is relative to a precise point (reference point). This requires that the X Offset be set which will be used to harmonize the X=0 coordinate of all of the individual slaves.

NOTE

For Oscillating Mirror models the scan line must be parallel to the conveyor direction and only the Y calibration will be performed, (the X and Z axes will automatically be set to zero).

Z Offset (if necessary): for packs that are elevated above the conveyor surface (for example on tilt trays), this parameter sets an offset for the height of a pack so that Z = 0 corresponds to the bottom of the pack.

Auto PackTrack Setup

1. Click on the Start button and follow the instructions given in the Auto PackTrack procedure window.

   The first message is sent to the slaves and their status is shown in the synoptic buttons at the top of the window.

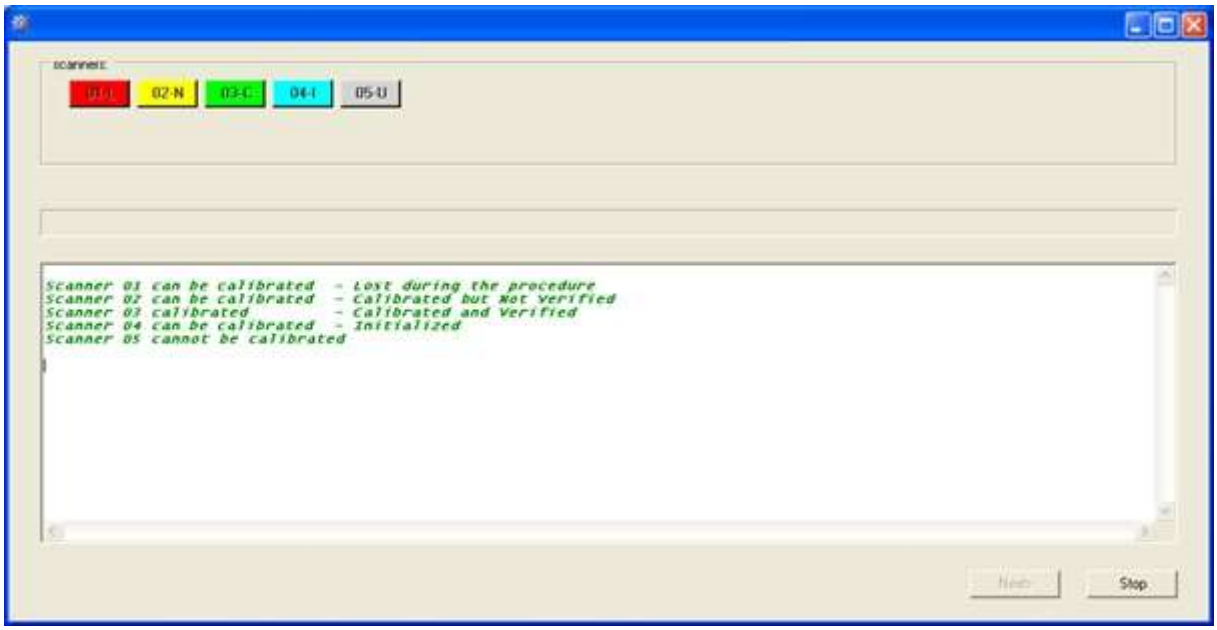

   The scanner status indicated by each synoptic button has the following convention:

Color	Symbol	Meaning
Grey	**xx-U**	slave xx cannot be calibrated - calibration is not supported by scanner software version
Red	**xx-U**	slave xx can be calibrated but the calibration procedure fails either barcode reading or verification
Red	**xx-L**	slave xx can be calibrated - is Lost stops responding during the procedure
Aqua	**xx-I**	slave xx can be calibrated - is in the Initial state ready to be calibrated
Yellow	**xx-N**	slave xx can be calibrated - is calibrated but Not verified
Green	**xx-C**	slave xx calibrated - is calibrated and verified

   The symbol **xx** is the number of the slave scanner **01, 02, 03** etc.

2. Follow each step given in the Auto PackTrack procedure window. The instructions and summary of each step are written in the terminal area of the window. The Synoptic buttons report the slave scanner status throughout the procedure.

   Basically, place the PCT-8000 onto the moving conveyor, before the PS Line (reference point) and parallel to a conveyor edge (i.e. right-hand edge) with its arrow in the same direction as the conveyor movement. Let it pass through the reading station.

NOTE

*If there are any nodes that show as **U** or **L**, then you should Stop the procedure and correct the problem. If the nodes respond with **I**, **N**, or **C** then you can Continue with the procedure.*

To run each instruction press the Next button. The procedure repeats the steps asking to change the PCT-8000 X position (i.e. always before the PS Line (reference point) and parallel to a conveyor edge but changing to the left-hand edge and/or to the center of the conveyor), until the procedure terminates. At the end of the procedure, only the Stop button is active. Typically 3 passes are necessary.

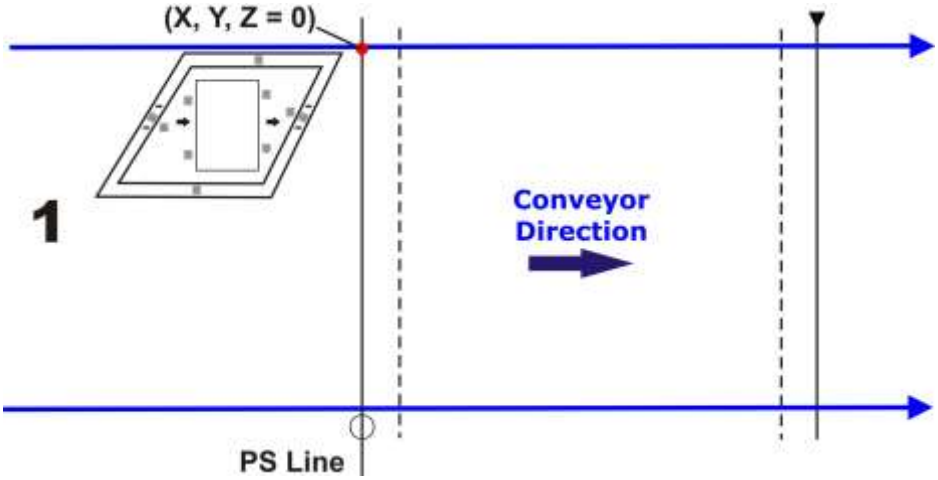

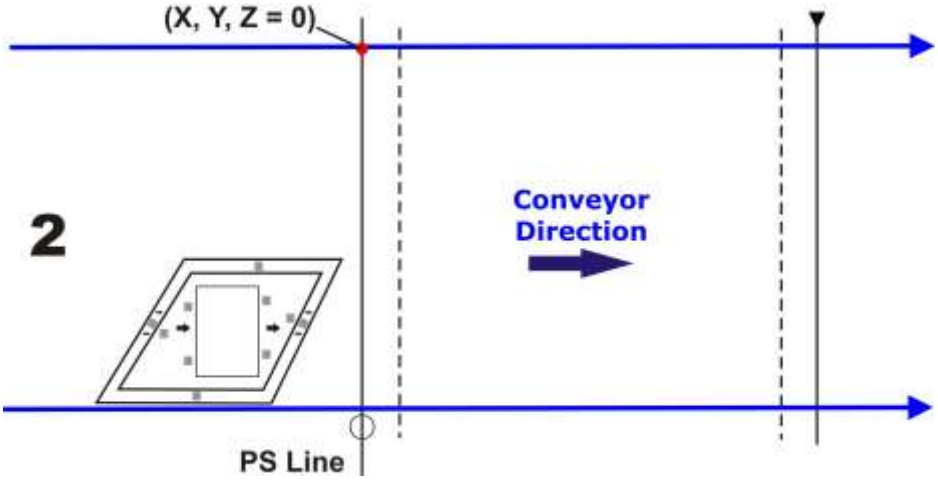

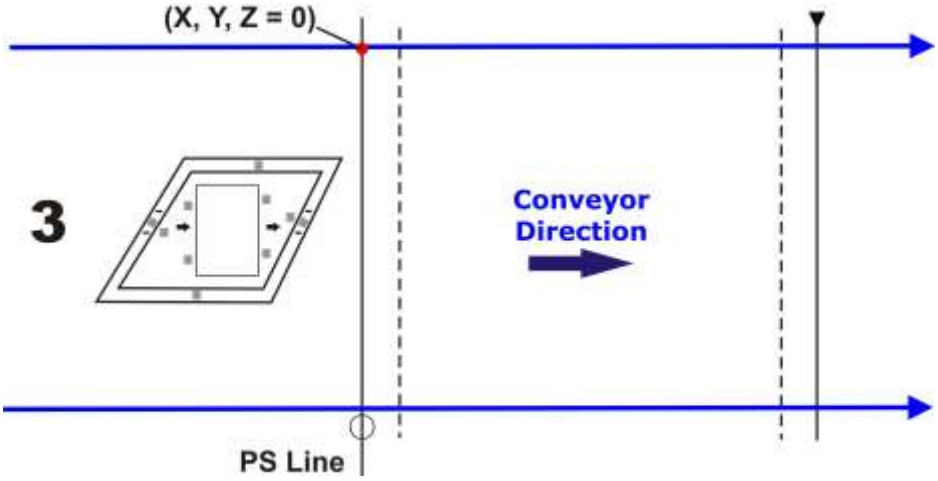

3. The Absolute X coordinate requires placing the barcode label **centered** onto the physical X position (X Offset) on the conveyor (previously set in the dialog box), you have 2 minutes to read the code before the procedure ends automatically.

NOTE	*Be careful that the barcode is not accidentally read in the act of placing it at the desired X Offset position, and assure that **it is read by only one scanner** (see the figure below). You may have to pass your hand or other opaque object over it in order to end this step.*

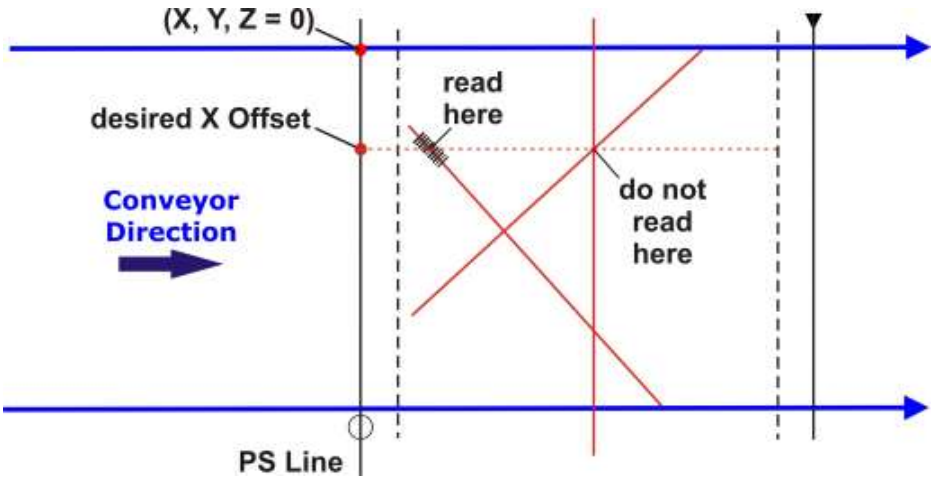

4. When you have successfully completed the procedure, (all scanners are green), press the Stop button to end the procedure and return to the Auto PackTrack setup window.

NOTE	*The Stop button is always present and can be used at any time to end the procedure and return to the Auto PackTrack setup window.*

NOTE	*At this point you can download the Auto PackTrack Report file saved in the Master scanner RAM. This can only be done by connecting the Master to another instance of Genius™ on a different communication channel. Select the Tools>File transfer... menu from this new Genius™ connection.*

5. From the original Genius™ connection, press the Exit button to exit the Addon.

   The calibrated values for the reading station will be sent to the Master scanner and the Master scanner will reset the reading station which is now calibrated and ready.

Auto PackTrack Report

The Auto PackTrack Report file can be downloaded from the Master scanner RAM by using the *Tools>File transfer…* menu in Genius™. The report is divided into three sections.

The first section contains the general calibration parameters:

```
---------------------------------------
PARAMETERS
---------------------------------------
Calibration type        XYZ X Absolute (X Offset 550)
Sensor type             configured
Pack version            2 (Z Offset 0)
```

The second section contains for each node, the calibration table, and the final calibration state.

```
---------------------------------------
PACKTRACK GLOBAL CALIBRATION TABLE DX node 5
---------------------------------------
P1: X(mm)               36
P1: Y(mm)               1077
P1: Z(mm)               10
P1: Distance(mm)        36
P1: Position            1077
P2: X(mm)               715
P2: Y(mm)               1096
P2: Z(mm)               10
P2: Distance(mm)        10
P2: Position            715
P3: X(mm)               518
P3: Y(mm)               1304
P3: Z(mm)               650
P3: Distance(mm)        1096
P3: Position            10
XP1: X(mm)              36
XP1: Y(mm)              1077
XP1: Z(mm)              10
XP1: Distance(mm)       36
XP1: Position           1077
XP2: X(mm)              715
XP2: Y(mm)              1096
XP2: Z(mm)              10
XP2: Distance(mm)       10
XP2: Position           715
XP3: X(mm)              518
XP3: Y(mm)              1304
XP3: Z(mm)              650
XP3: Distance(mm)       1096
XP3: Position           10
Calibration State       VERIFIED

---------------------------------------
PACKTRACK CALIBRATION TABLE DS node 6
---------------------------------------
P1: X(mm)               36
P1: Y(mm)               1077
P1: Z(mm)               10
P1: Distance(mm)        36
P1: Position            1077
P2: X(mm)               715
P2: Y(mm)               1096
P2: Z(mm)               10
P2: Distance(mm)        10
P2: Position            715
P3: X(mm)               518
P3: Y(mm)               1304
P3: Z(mm)               650
P3: Distance(mm)        1096
P3: Position            10
Calibration State       VERIFIED
```

The last section summarizes the calibration status of each scanner.

```
--------------------------------------
SCANNERS STATE SUMMARY
--------------------------------------
Scanner E                    Calibrated and verified
Scanner F                    Calibrated and verified
Scanner J                    Calibrated and verified
Scanner K                    Calibrated and verified
Scanner L                    Calibrated and verified
Scanner M                    Calibrated and verified
Scanner N                    Calibrated and verified
Scanner O                    Calibrated and verified
Scanner Q                    Calibrated and verified
Scanner R                    Calibrated and verified
Scanner S                    Calibrated and verified
```

9.2.2 Manual PackTrack™ Calibration for DX8200A Scanner Using SPY

The DX8200A scanner calibration is already made at the factory and it is not recommended to overwrite it. By means of the Genius™ software tool SPY, the user can set the Direction and PS Offset parameters.

Select the “SPY” option from the Tools menu or click on the related icon on the Genius™ toolbar to open the following dialog box:

Note: When selecting a slave scanner through the Master, click on the slave in the Devices window, then click the SPY icon.

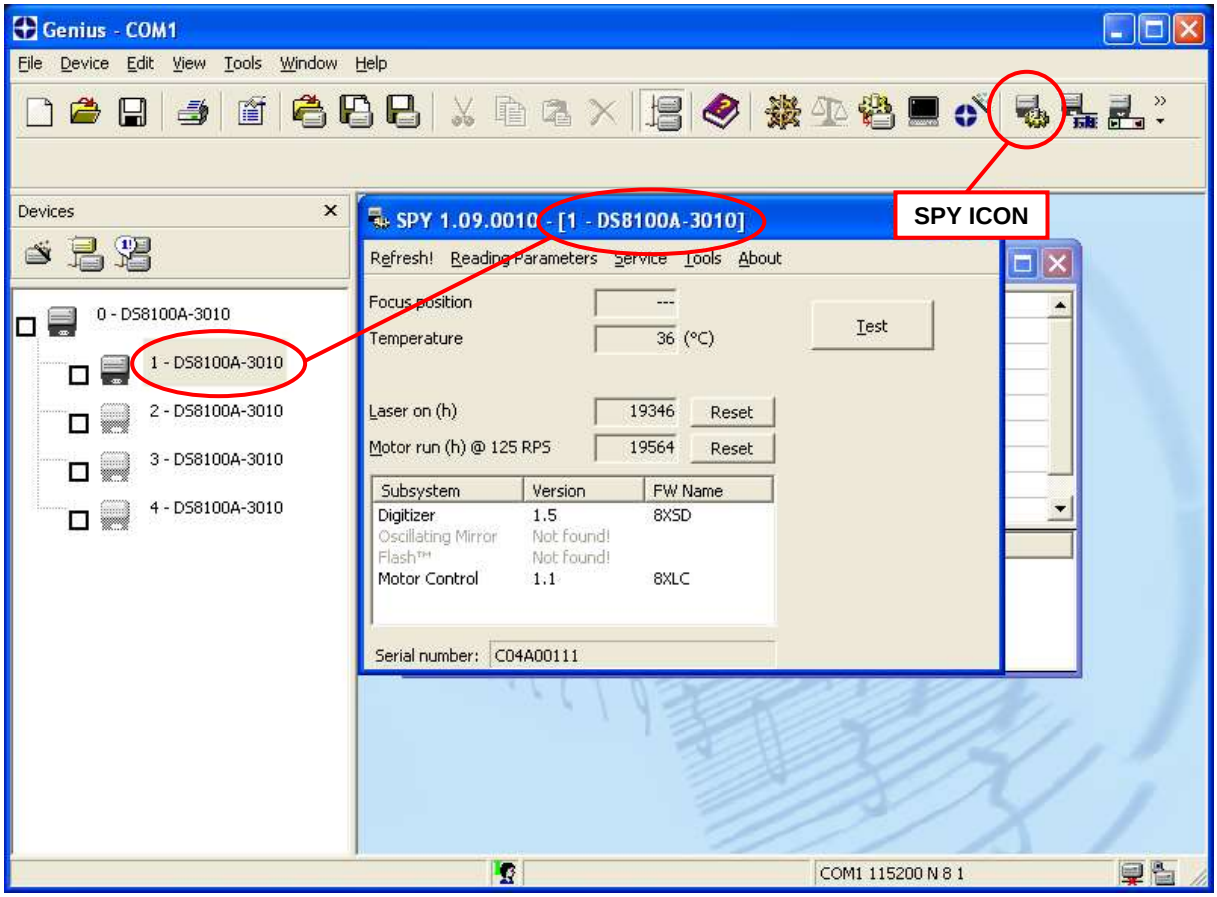

Figure 90 – Opening the Spy Window

Once the Spy window has been opened, select the “PackTrack™ Calibration” option from the Tools menu:

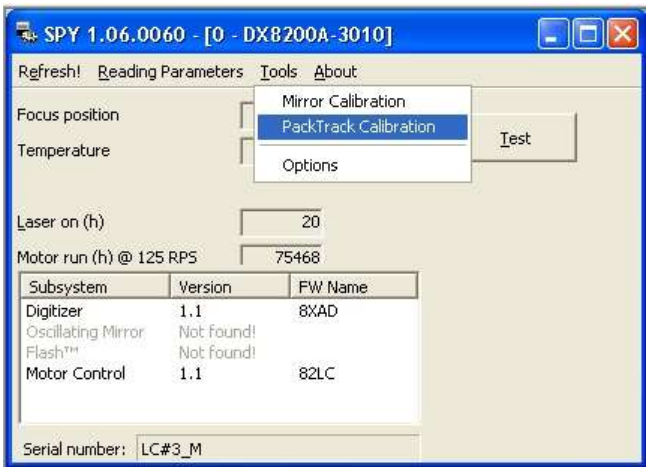

Figure 91 – Selecting PackTrack™ Calibration Option

The following window will open:

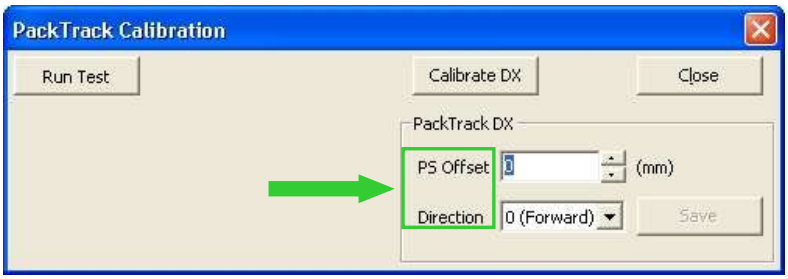

Figure 92 – PackTrack™ Calibration Window

Set the PS Offset and Direction parameters.

Scanner Direction

The different scanner orientations are illustrated in the following figures:

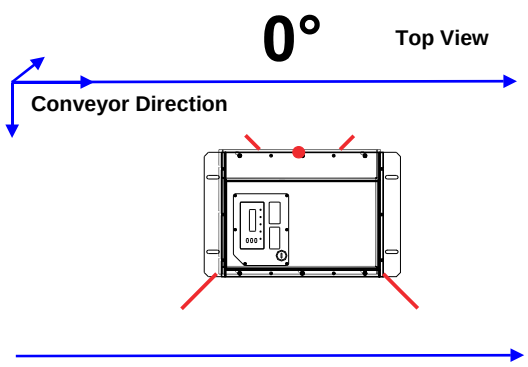

DX8200A Scanner Direction 0° (Forward)

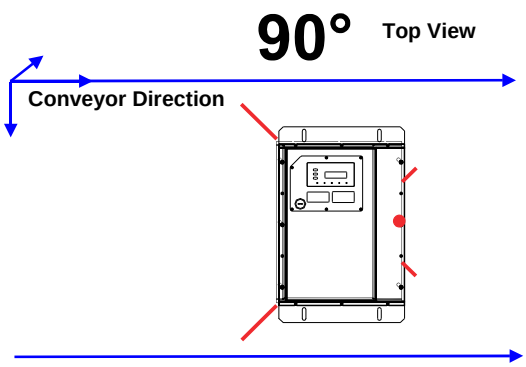

DX8200A Scanner Direction 90°

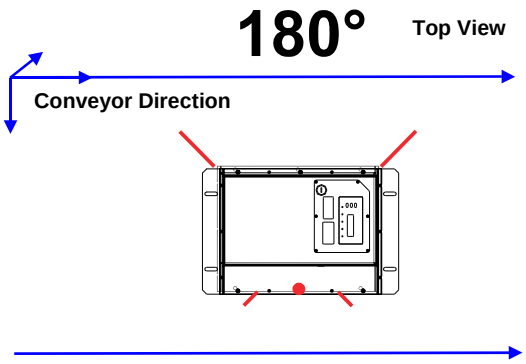

DX8200A Scanner Direction 180° (Reverse)

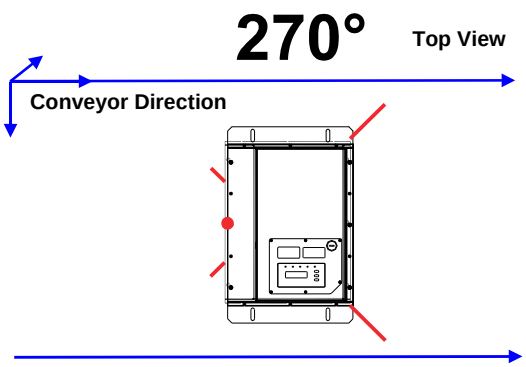

DX8200A Scanner Direction 270°

PS Offset

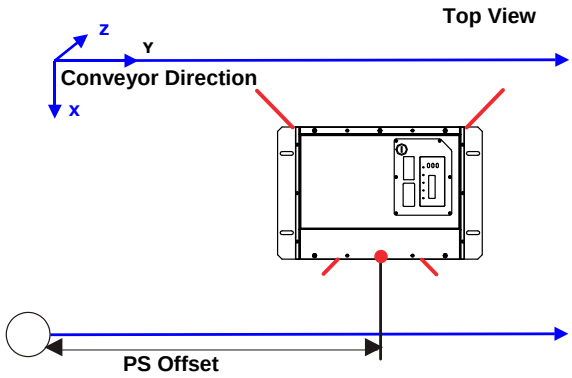

9.2.3 Overwriting PackTrack™ Calibration for DX8200A

Only necessary for special circumstances, it is possible to overwrite the factory scanner calibration by clicking on the “Calibrate DX” button shown in the figure above.

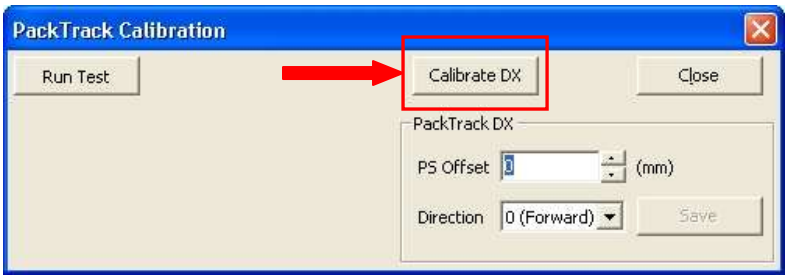

Figure 93 – PackTrack™ Calibration Window

The PackTrack™ Calibration window will expand and appear as shown in the following figure:

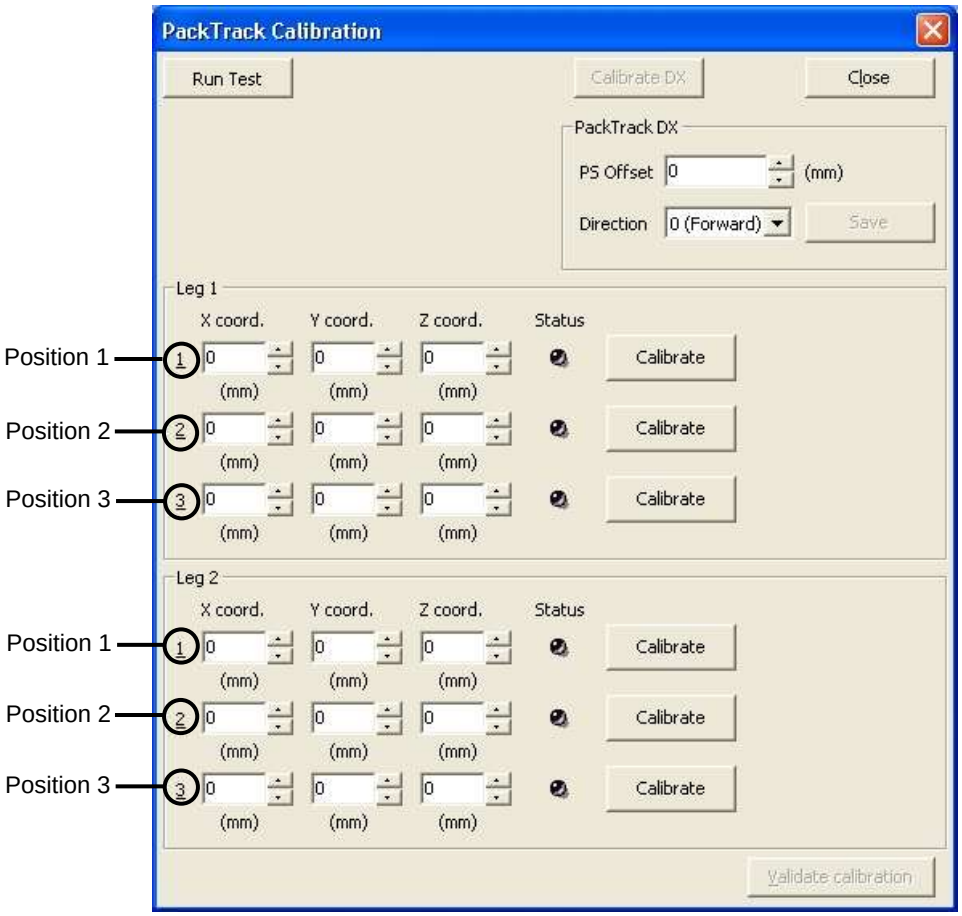

Figure 94 – Performing the PackTrack™ Calibration

For DX scanners the zero coordinate references are located on the scanner.

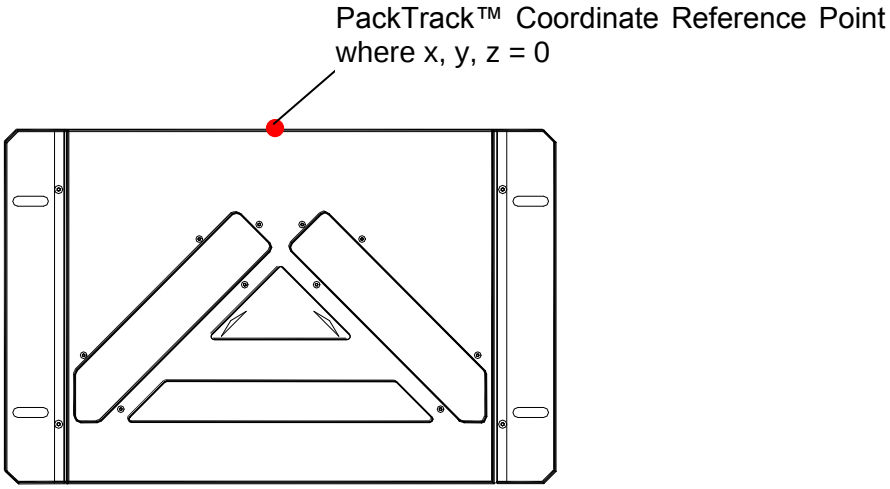

Figure 95 – DX8200A Coordinate Reference Point

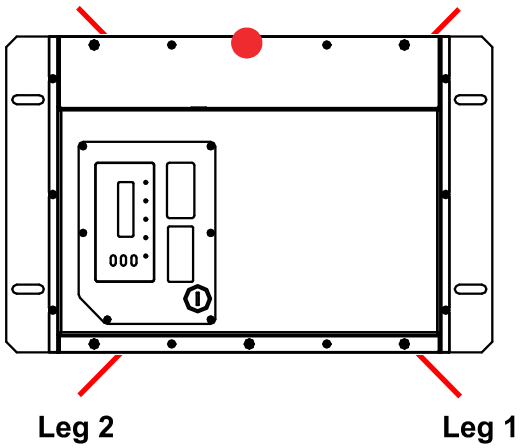

Figure 96 – DX8200A Scan Legs

To overwrite the factory scanner calibration, follow the procedure below for Leg 1:

1. Place the code at the desired position on the laser beam (Position 1).

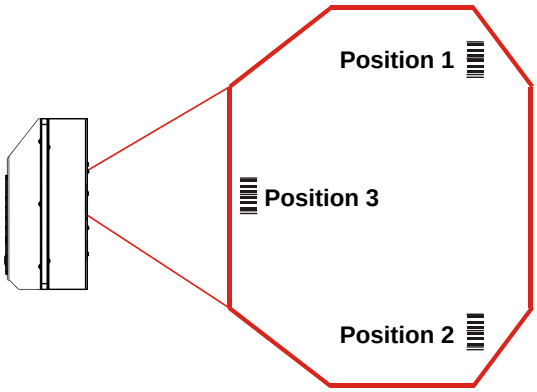

2. Measure the X, Y and Z coordinates relative to the center of the code and enter them into the corresponding edit boxes.

NOTE

In the vast majority of systems the x and z data are not necessary. For these cases set x = 0, z= 0 during the calibration procedure.

3. Press the Calibrate button for Position 1 to start the calibration.
4. Repeat the same procedure for Position 2 and Position 3.
5. Press the “Validate Calibration” button to validate the calibration settings.
6. Repeat the whole procedure for Leg 2.

Before closing the dialog box, press the Run Test button to test the calibration results and efficiency. See the following figure.

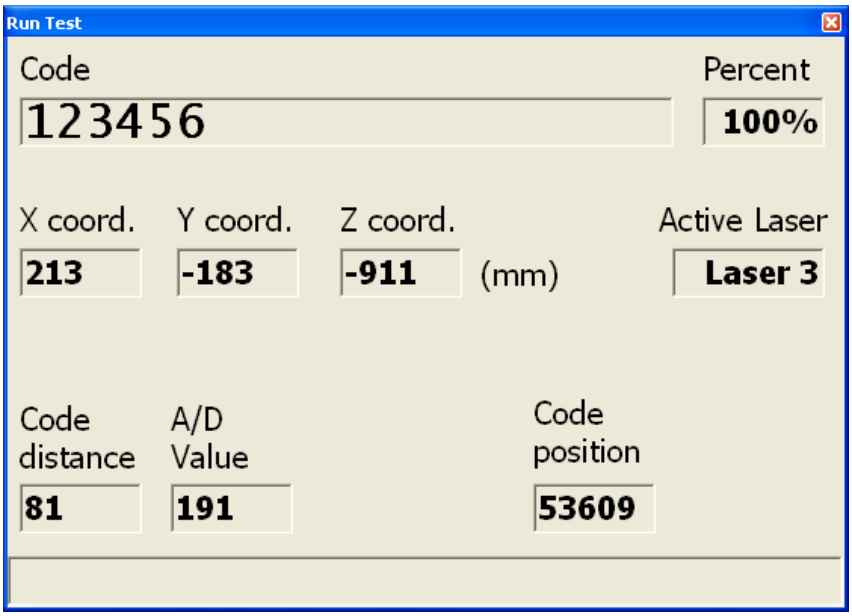

Figure 97 – Testing PackTrack™ Calibration

Repeat the entire procedure for each scanner in the Reading Station.

9.3 PERFORMANCE

The scan rate is 1000 scans/sec (500 scans on each leg).

Refer to the diagrams in par. 9.4 for further details on the reading features. These diagrams are taken on various resolution sample codes at a 25 °C ambient temperature depending on the conditions listed under each diagram.

If standard models do not satisfy specific requirements, contact your nearest Datalogic distributor, supplying code samples, to obtain complete information on the reading possibilities.

9.3.1 Reading Conditions

- ANSI Grade B minimum
- 500 scans/sec per leg

The following tables describe the requirements for standard applications.

Minimum Code Height for Omnidirectional Reading (mm)							
Conveyor Speed (m/s)		**0.5**	**1**	**1.5**	**2**	**2.5**	**3**
2/5 Interleaved Code Resolution (mm)	**0.25**	11	13	15	17	19	21
	0.30	12	14	16	18	20	23
	0.33	13	15	17	19	21	23
	0.38	14	16	18	20	23	25
	0.50	18	19	22	24	26	28
	0.72	24	26	27	29	32	34
	1.00	33	34	35	37	39	41

Ratio 3:1

Table 1

Minimum Code Height for Omnidirectional Reading (mm)							
Conveyor Speed (m/s)		**0.5**	**1**	**1.5**	**2**	**2.5**	**3**
Code 39 Code Resolution (mm)	**0.25**	9	11	13	15	17	19
	0.30	10	11	14	16	18	20
	0.33	11	12	14	16	18	20
	0.38	12	13	15	17	19	21
	0.50	15	16	17	19	21	23
	0.72	20	22	23	24	25	27
	1.00	27	28	29	30	32	33

Ratio 3:1; Interdigit = Module Size

Table 2

Minimum Code Height for Omnidirectional Reading (mm)							
Conveyor Speed (m/s)		**0.5**	**1**	**1.5**	**2**	**2.5**	**3**
Code 128 – GS1-128 Code Resolution (mm)	**0.25**	8	10	12	14	16	18
	0.30	9	11	13	15	17	19
	0.33	9	11	13	15	18	20
	0.38	10	12	14	16	18	20
	0.50	12	14	16	18	20	22
	0.72	16	18	19	21	24	26
	1.00	22	23	24	26	28	30

Table 3

Minimum Code Height for Omnidirectional Reading (mm)							
Conveyor Speed (m/s)		**0.5**	**1**	**1.5**	**2**	**2.5**	**3**
Codabar Code Resolution (mm)	**0.25**	8	10	12	14	16	18
	0.30	9	11	13	15	17	19
	0.33	9	11	13	15	18	20
	0.38	10	12	14	16	18	20
	0.50	13	14	16	18	20	22
	0.72	17	18	19	21	24	26
	1.00	23	24	25	26	28	30

Ratio 3:1; Interdigit = Module Size

Table 4

Minimum Code Height for Omnidirectional Reading (mm)							
Conveyor Speed (m/s)		**0.5**	**1**	**1.5**	**2**	**2.5**	**3**
EAN 8-13, UPC-A Code Resolution (mm)	**0.25**	8	9	11	13	15	18
	0.30	9	10	12	14	16	18
	0.33	9	10	12	14	16	19
	0.38	10	11	13	15	17	19
	0.50	12	13	14	16	19	21
	0.72	16	18	19	20	21	23
	1.00	22	23	24	25	26	27

Table 5

9.4 READING DIAGRAMS

DX8200A-3X3X (0.25 mm/10 mils)

The diagram shows an average reading area obtained considering different barcode types of variable quality.

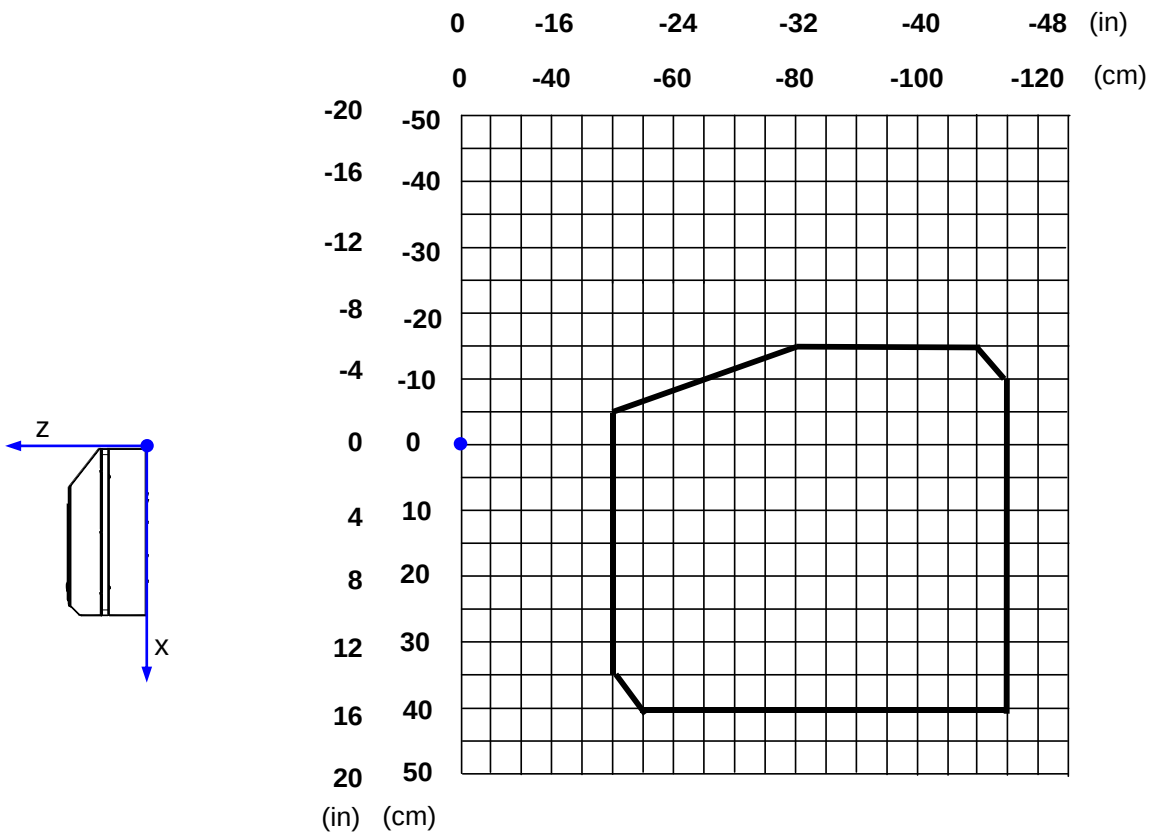

Note: x = 0 and z = 0 correspond to the edge of the DX8200A scanner as shown in the figure above.

CONDITIONS

Code = Interleaved 2/5 or Code 39

PCS = 0.90

DX8200A-3X2X (0.30 mm/12 mils)

The diagram shows an average reading area obtained considering different barcode types of variable quality.

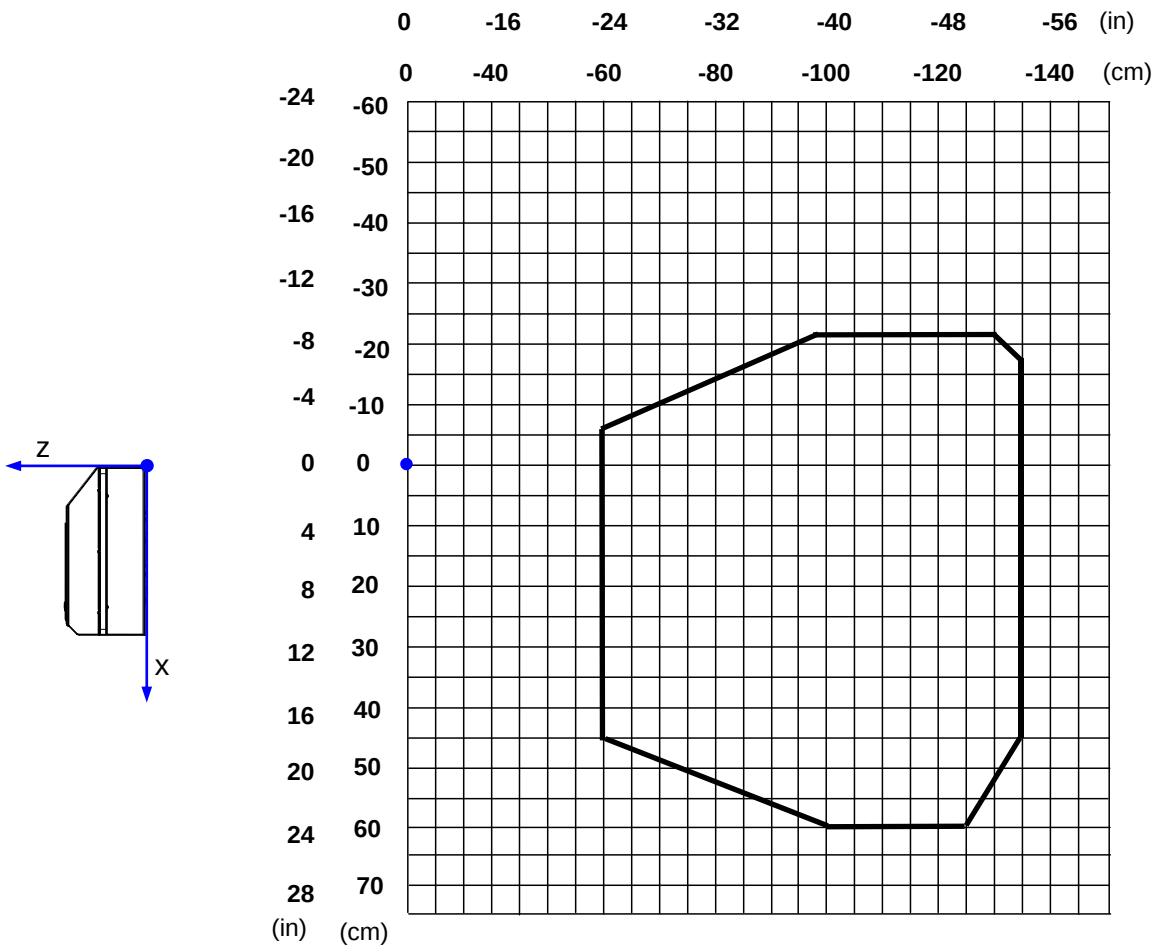

Note: x = 0 and z = 0 correspond to the edge of the DX8200A scanner as shown in the figure above.

CONDITIONS

Code = Interleaved 2/5 or Code 39

PCS = 0.90

DX8200A-3X1X (0.38 mm/15 mils)

The diagram shows an average reading area obtained considering different barcode types of variable quality.

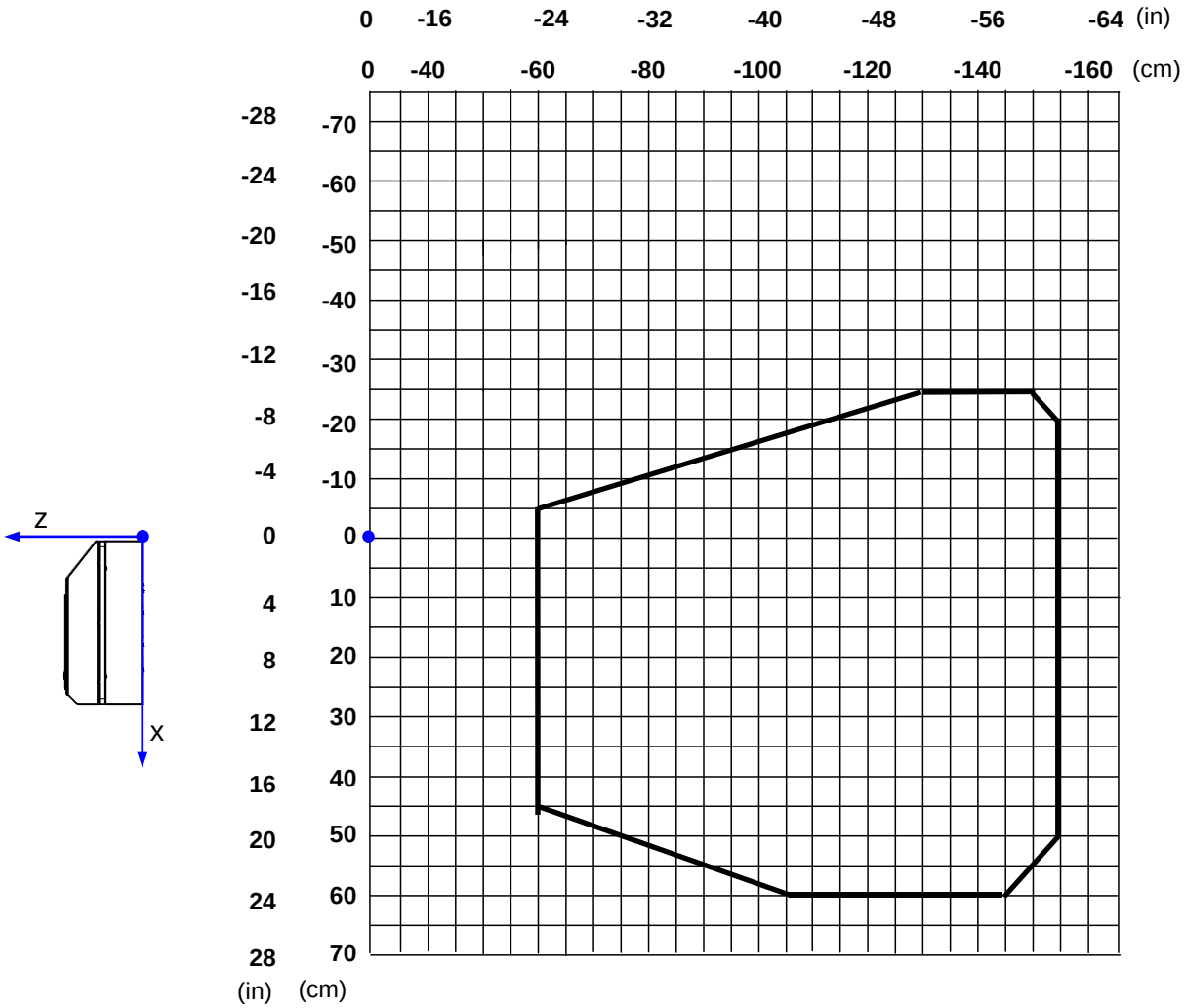

Note: x = 0 and z = 0 correspond to the edge of the DX8200A scanner as shown in the figure above.

CONDITIONS

Code = Interleaved 2/5 or Code 39

PCS = 0.90

DX8200A-3X1X (0.50 mm/20 mils)

The diagram shows an average reading area obtained considering different barcode types of variable quality.

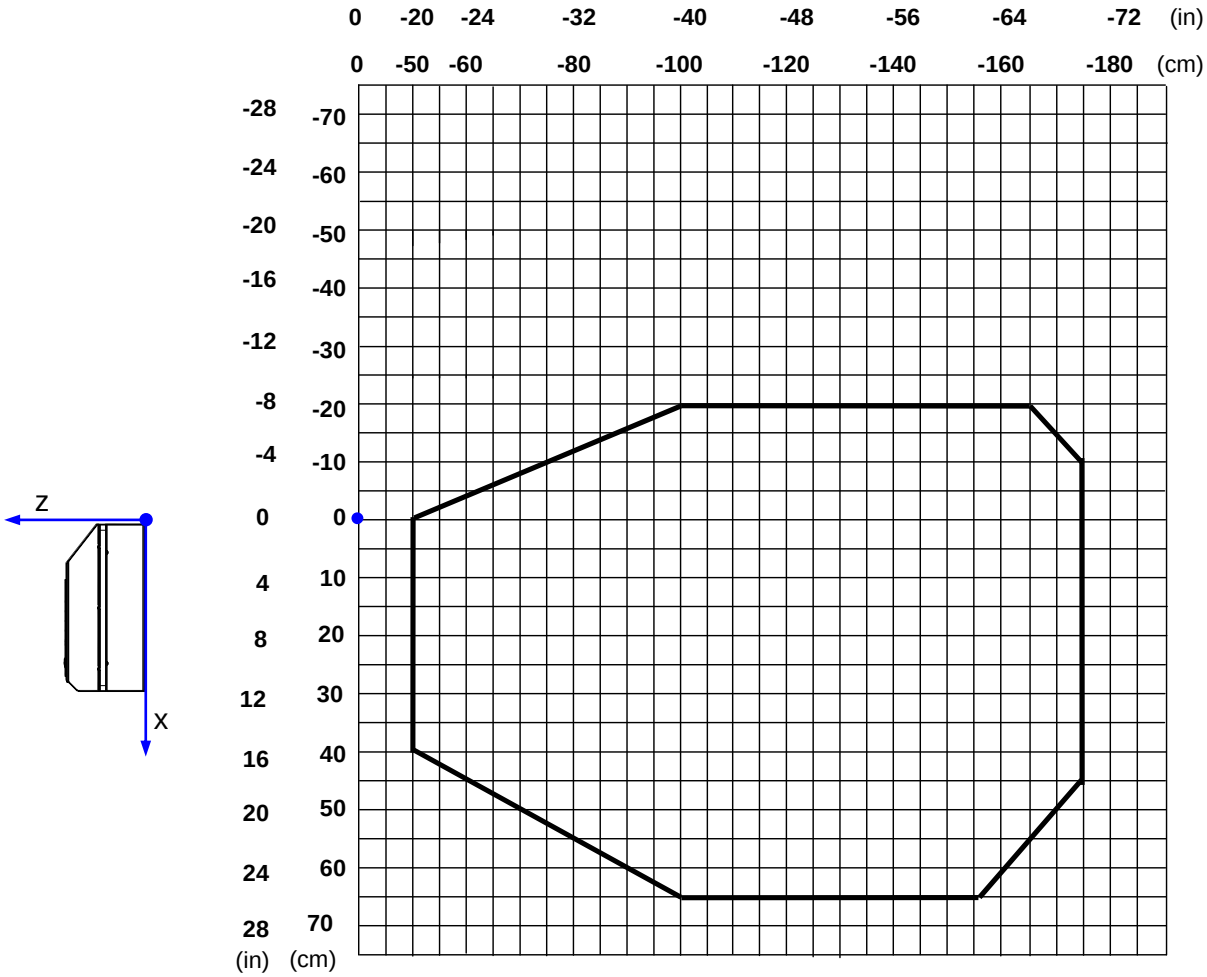

Note: x = 0 and z = 0 correspond to the edge of the DX8200A scanner as shown in the figure above.

CONDITIONS

Code = Interleaved 2/5 or Code 39

PCS = 0.90

10 MAINTENANCE

10.1 CLEANING

Clean the laser beam output windows periodically for correct operation of the scanner (see Figure A in chapter “General View”).

Dust, dirt, etc. on the window may alter the reading performance.

Repeat the operation frequently in particularly dirty environments.

Use soft material and alcohol to clean the window and avoid any abrasive substances.

WARNING

Clean the windows of the DX8200A when the scanner is turned off or at least when the laser beam is not active.

10.2 EXTERNAL MEMORY BACKUP & RESTORE

Backup and Restore is vital to all applications in that it provides a method to quickly replace a reader and return the station to full capacity in the event of a failure. The External Memory Backup and Restore procedure is the preferred method since it always provides complete backup and restore functions (Configuration and Environmental parameters).

When the DX8200A scanner is connected through CBX series connection boxes, Backup and Restore is provided through the BM100 accessory module installed inside the CBX100 or CBX500 connection box.

If the DX8200A scanner is integrated into an ID-NET™ network having an SC4000 ID-NET™ controller as Master, then the SC4000 also provides the Backup and Restore procedure.

This procedure can be performed directly from the Genius™ Device menu.

To manually perform the Backup and Restore procedure see the relative BM100 or SC4000 manual for details.

10.3 AUTOMATIC SCANNER REPLACEMENT (ASR)

NOTE

The ASR procedure is available for backward compatibility or for applications that do not use the CBX/SC4000, however it is not the preferred method.

The Datalogic Automatic Scanner Replacement (ASR) procedure allows restoring system functioning automatically after one or more scanners are replaced in a Master/Slave Lonworks network.

The ASR procedure is principally used for PackTrack™ configurations, but it restores only a part of the system parameters: common slave parameters (Code Selection and Reconstruction) plus each single slave PackTrack™ calibration.

The Master must be prepared at the time of installation in order for this procedure to work correctly.

10.3.1 ASR Network Configuration

1. On the Master scanner, **check the Modify & Backup Lon Slave Scanner Configuration parameter** in Genius™ and configure the Lonworks Slave Scanner Common Parameters (Code and Reconstruction Parameters).
2. Enable the ASR procedure through the **Enable A.S.R. parameter** in the Master configuration.
3. Send the configuration to the Master EEPROM to force the Slave Operating Mode, Code Reading Symbologies and Reconstruction parameters and store all the Slave PackTrack™ calibration tables.

   Now the Slave scanners are configured through the Master (ASR parameters stored in the Master) and the ASR procedure is implemented.
4. Save this configuration to file (.ddc).

10.3.2 Scanner Replacement Procedure

NOTE

The ASR procedure requires replacing one scanner at a time.

Slave

1. Power down the entire system.
2. Replace the Slave scanner with a new one (default settings).
3. Power up the system and wait for initialization.

Master

1. Load the saved configuration from file (.ddc) to a new Master scanner.
2. Power down the entire system.
3. Replace the old Master scanner with the new one.
4. Power up the system and wait for initialization.

NOTE

The ASR works only if both the Master and Slave devices have software 6.40 or later.

11 TROUBLESHOOTING

NOTE	*Before contacting your local Datalogic office or Datalogic Partner or ARC, it is suggested to save the device configuration to a *.ddc file by means of the Genius™ software configuration program and check the device exact model and serial number.*

TROUBLESHOOTING GUIDE	
Problem	**Suggestion**
Power On: the “Power On” LED is not lit.	• Is power connected? • If using an external power supply (like PWR-120), is it connected to the AC source? • If using rail power, does rail have power? • If using CBX100/CBX500, does it have power (check switch and LED)? Check if you are referring to the 26-pin connector or to the CBX100/CBX500 spring clamp connectors. • Measure voltage at pin 13 and 25 (for 26-pin connector) or at spring clamp **Vdc** and **GND** (for CBX100/CBX500).
On Line Mode: the Master’s “Phase On” LED is not lit (when external trigger/PS activates).	• Check carefully if you are referring to the 26-pin connector or to the CBX100/CBX500 spring clamp connectors. • Is sensor connected to EXT TRIG/PS input? • Is power supplied to photo sensor? • Is power supplied to one out of the two EXT TRIG/PS (NPN output)? • Is one out of the two EXT TRIG/PS grounded (PNP output)? • Are the photo sensor LEDs (if any) working correctly? • Is the sensor/reflector system aligned (if present)?
On Line Mode: the Master’s “Phase On” LED is correctly lit but nothing happens (no reading results).	• Is the software configuration consistent with the application condition (operating mode, etc.)? In the Genius™ software configuration program select the OPERATING MODES folder and check for related parameters.
Serial On Line Mode: the reader is not triggered (no reading results).	• In the Genius™ program select the OPERATING MODE folder and check if serial on line is enabled as “On Line options” parameter value. • Are the Start-Stop string correctly assigned? • Is the serial trigger source correctly connected and configured)

TROUBLESHOOTING GUIDE	
Problem	**Suggestion**
On Line Mode and Serial On Line Mode: the reader does not respond correctly to the expected external signal end.	• In the Genius™ software configuration program select the OPERATING MODES folder and check the “Reading Phase Timeout” parameterization.

Reading:
it is not possible to read the target barcode (always returns No Read)
	• Check synchronization of reading pulse with object to read.
	• Place barcode in the center of scan line and run TEST MODE (selectable by Genius™ as Operating Modes).
	If you still have troubles, check the following:
	  • Is the reading distance within that allowed (see reading diagrams)?
	  • Choose the CODE tab and enable different code types (except Pharmacode). LENGTH = Variable.
	  • Is the barcode quality sufficient?
	• If you had no success, try to perform the test using the BARCODE TEST CHART included with the product.
	• If working in PackTrack™ mode, verify that the coordinates (in particular the Y axis) are correct.

Communication: the device is not transmitting anything to the host.	• Is serial cable connected? • Is correct wiring respected? • If using MAIN RS232 or RS485 interface, is the reference ground connected to proper SGND Main Isolated (also referred to as GND_ISO)? Be careful that it is not completely different from GND power ground. • If using CBX100/CBX500, be sure the RS485 termination switch is positioned to OFF. • Are serial host settings equivalent to serial device settings?
Communication: data do not appear on the terminal.	• In the Genius™ program enable the DATA COMMUNICATION SETTINGS/MAIN-AUXILIARY PORT\DATA TX parameter.
Communication: data transferred to the host are incorrect, corrupted or incomplete.	• In the Genius™ program select the DATA COMMUNICATION SETTINGS/DATA FORMAT folder and check for HEADER, TERMINATOR, SEPARATOR and FILL CHAR values. • Check the CODE FIELD LENGTH value, too. • Are the COM port parameters correctly assigned?

TROUBLESHOOTING GUIDE	
Problem	**Suggestion**
Communication: the scanner “Network” LED is not lit.	• If the LED is OFF, check the connections between the DX8200A slaves and the SC6000 or DX8200A master. If the error persists, contact your Datalogic distributor.
How do I obtain my units’ serial numbers?	• The device serial number is printed on a label that is affixed above the connector panel of the reader. • The serial number is also displayed when connecting the device through the Genius™ program. • Serial numbers consist of 9 characters: one letter, 2 numbers, another letter followed by 5 numbers.

12 TECHNICAL FEATURES

ELECTRICAL FEATURES		
	VAC models	**VDC models**
Supply voltage	110 to 240 Vac	20 to 30 Vdc
Power consumption	30 VA typical 0.4 to 0.2 A max. (including startup current)	24 W typical 1.5 to 1.0 A max. (including startup current)
Common Communication Interfaces	**Main**	**Baud Rate**
	RS232	1200 to 115200
	RS485 full-duplex	
	RS485 half-duplex	
	Auxiliary	
	RS232	1200 to 115200
	Other	
	Lonworks	1.25 Mb/s
Model–Dependent Communication Interfaces	Ethernet DeviceNet Profibus	100 Mb/s up to 500 Kb/s up to 12 Mb/s
Inputs Ext. Trigger 1, Encoder 2 aux. digital inputs	(optocoupled NPN or PNP)	
Outputs 3 software programmable digital outputs	(optocoupled)	
OPTICAL FEATURES		
Light receiver	Avalanche photodiode	
Wavelength	630 to 680 nm	
Safety class	Class 2 - EN60825-1; Class II - CDRH	
Light source	Up to 4 semiconductor laser diodes	
Laser control	Security system to turn laser off in case of motor slow down	
READING FEATURES		
Scan rate	≤ 1000 scans/s (500 per leg)	
Maximum resolution Max. reading distance Max. reading width Max. depth of field	(see reading diagrams in par. 9.4)	
USER INTERFACE		
LCD Display	2 lines by 20 characters LCD	
Keypad	3 keys	
LED indicators	Power On (green) Phase On (yellow) Encoder (yellow)	TX Data (green) Network (red)

SOFTWARE FEATURES		
Readable Codes	Interleaved 2/5 Code 39 Standard Codabar Code 128 GS1-128 (ex EAN 128) Code 93 (standard and full ASCII) EAN/UPC (including Add-on 2 and Add-on 5) GS1 DataBar (including Limited and Expanded)	
Code selection	Up to 10 codes during one reading phase	
Headers and Terminators	Up to 128-byte headers and 128-byte terminators	
Operating modes	On Line, Serial On Line, Automatic, Test, PackTrack™, Continuous	
Configuration modes	Genius™ utility program	
Parameter storage	Non-volatile internal FLASH	
ENVIRONMENTAL FEATURES		
Operating temperature Storage temperature Humidity	0° to +50 °C (+32° to +122 °F) -20° to +70 °C (-4° to +158 °F) 90% non condensing	
Ambient light immunity	20000 lux	
Vibration resistance: EN 60068-2-6 2 hours on each axis	Frequency range from 5 to 150 Hz; Constant displacement 3 mm pk-pk from 5 to 9 Hz; Constant acceleration 0.5 g from 9 to 150 Hz	
Shock resistance: EN 60068-2-27 3 shocks on each axis	30 g; 11 ms	
	VAC models	**VDC models**
Protection class – EN 60529	IP40	IP64*
PHYSICAL FEATURES		
Mechanical dimensions	470 x 300 x 141 mm (18.50 x 11.81 x 5.55 in)	
Weight	about 11 kg (24 lbs. 3 oz)	

* sealed connectors required; including the Harting RJ Industrial® Push Pull Ethernet connector for older Ethernet models.

A ALTERNATIVE LAYOUTS

POINT-TO-POINT

Using a Point-to-Point layout, the data is transmitted on the Main interface as well as on the Auxiliary interface. The Main interface can be selected for RS232 or RS485 full-duplex communications. Two different layouts are available according to the DX8200A reader model used for the connection.

Standard Models

When On-Line operating mode is used, the reader is activated by an External Trigger/PS (photoelectric sensor) when the object enters its reading zone. In the following case, the signal is passed to the DX8200A through the CBX100/CBX500, which also passes power to the system from the power supply (i.e. PWR-120).

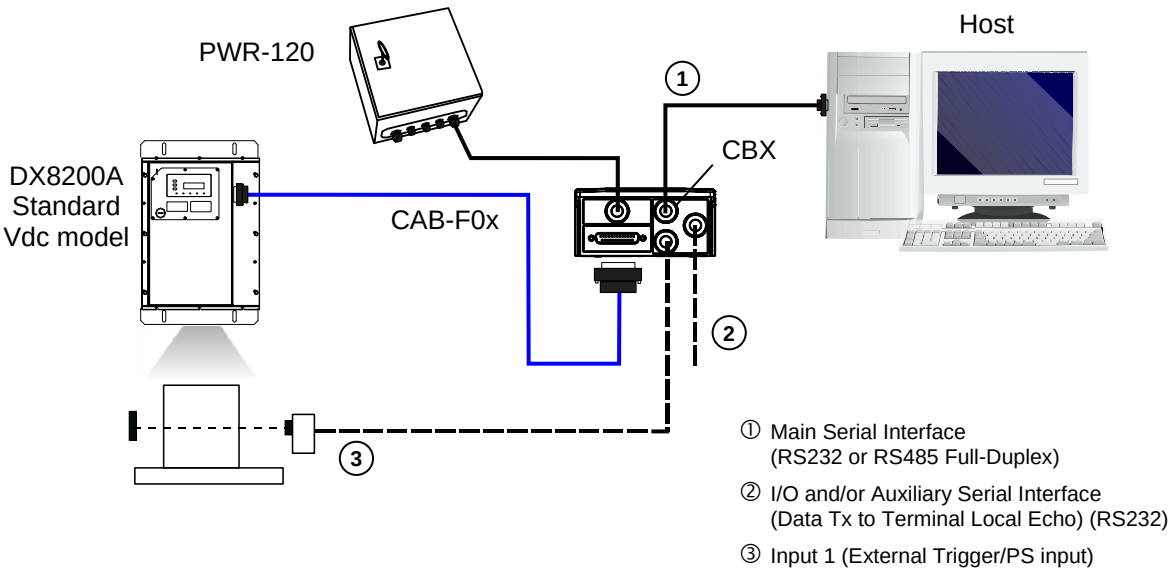

Figure 98 – Point-to-Point for Standard DC Models

In general, for all point-to-point layouts, DX8200A Vac models can substitute the Vdc model and therefore eliminate the PWR power supply. This requires that the CBX100/CBX500 must have the correct Power Source jumper setting to accept scanner power for the P.S.

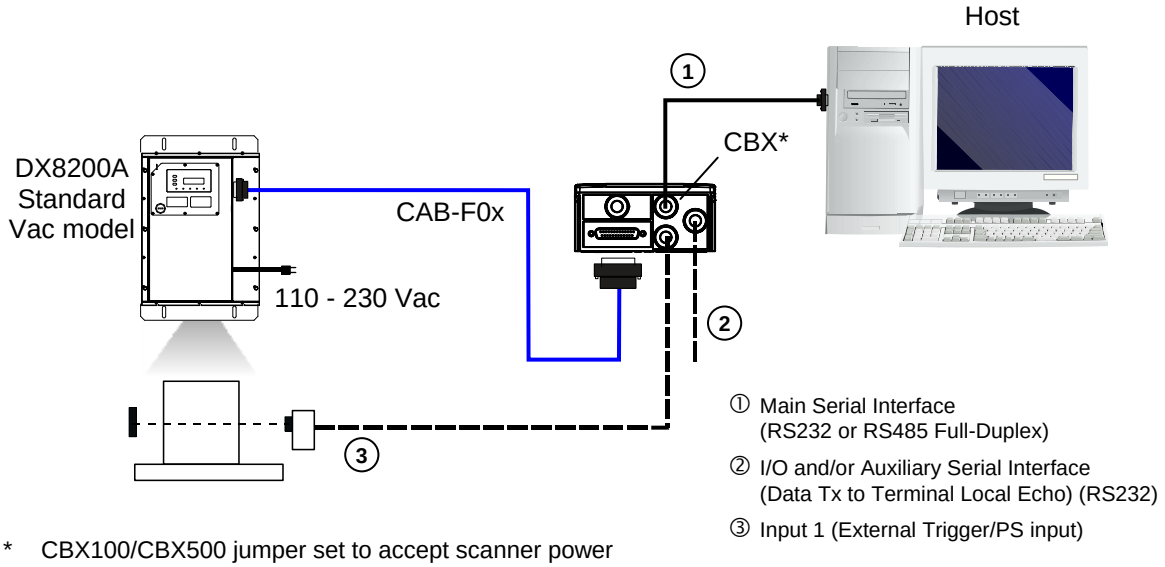

* CBX100/CBX500 jumper set to accept scanner power

Figure 99 – Point-to-Point for Standard AC Models

Fieldbus Models

In this case no External Trigger/PS is used and the CBX100/CBX500 only passes power to the reader. The DX8200A (Ethernet, DeviceNet or Profibus model) is connected to a fieldbus remote Host. It can be activated by a signal generated by the remote Host or always be active if working in Automatic operating mode.

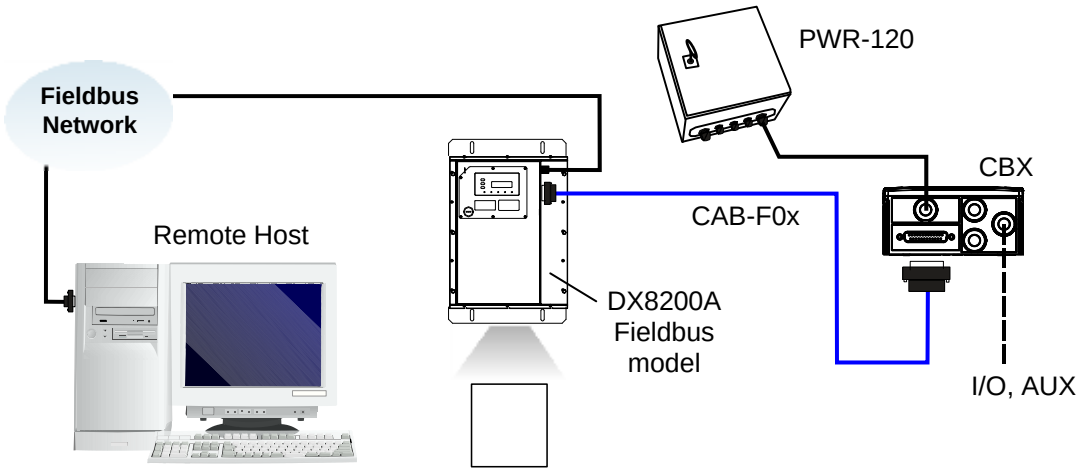

Figure 100 – Point-to-Point for Fieldbus DC Models

ID-NET™ GATEWAY

The CBX800 Gateway can be used to integrate a DX8200A reader into a high speed ID-NET™ network consisting of different scanners not provided with a Lonworks interface.

In this case the DX8200A uses its main RS232/RS485 interface to communicate with the CBX800.

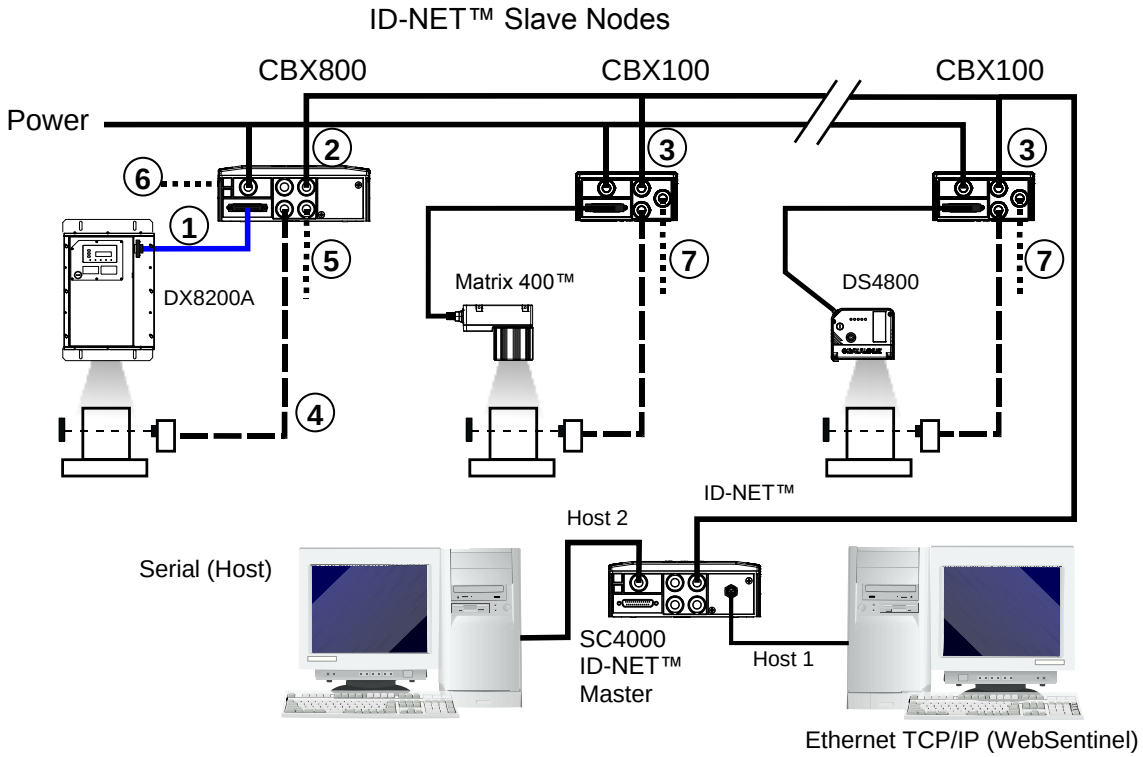

① CBX800 Source Interface
② CBX800 ID-NET™ Interface
③ Reader ID-NET™ Interface
④ External Trigger (for On-Line Mode)
⑤ Host Aux for CBX800 Configuration
⑥ Source Aux for Source Reader Configuration
⑦ Reader Auxiliary Interface for Reader Configuration

Figure 101 – DX8200A Slave/CBX800 Gateway in an ID-NET™ High Speed Network

NOTE

For 8K family scanners having software version 6.80 or later, an alternative fixed speed (57600 baud) ID-NET™ layout can be made without the use of the CBX800 provided:

- *the 8K scanner is only an ID-NET™ slave device*
- *the ID-NET™ master is only an SC4000 Controller*

See the ID-NET™ Application Note for details.

PASS THROUGH

When Pass Through is activated on the Auxiliary interface, the DX8200A reader can be integrated in a network consisting of different scanners not provided with a Lonworks interface.

This connection mode allows two or more devices to be connected to a single external serial interface. The DX8200A transmits the messages received by its auxiliary interface onto its main interface. The received data is transmitted "as is", (passed-through), and therefore any data formatting requirements must be made at each individual reader.

In this configuration a series of scanners can be connected together using RS232 on the main interface and all messages will be passed through this chain to the host. The reading phase of each scanner is independent from the others. In Pass Through connections each scanner is provided with its relative External Trigger (multi P.S.).

Applications can be implemented to connect a device such as a hand-held reader to the Auxiliary port for manual code reading capability.

For the RS232 connections the maximum cable length is 15 m (50 ft).

The scanners represented in the following figures are configured in Pass Through mode.

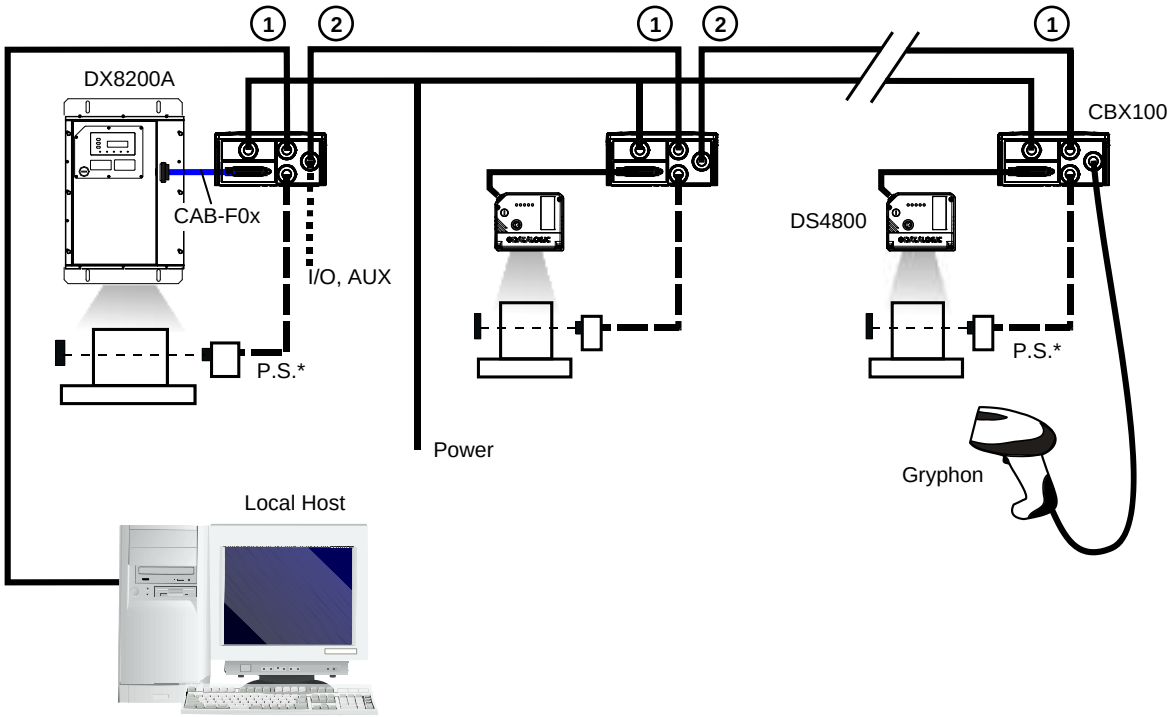

(1) Main Serial Interface

(2) Auxiliary Serial Interface

* P.S. (Presence Sensor) connected to Input 1 (External Trigger/PS) input.

Figure 102 – Pass Through Connection for DX8200A Standard Models

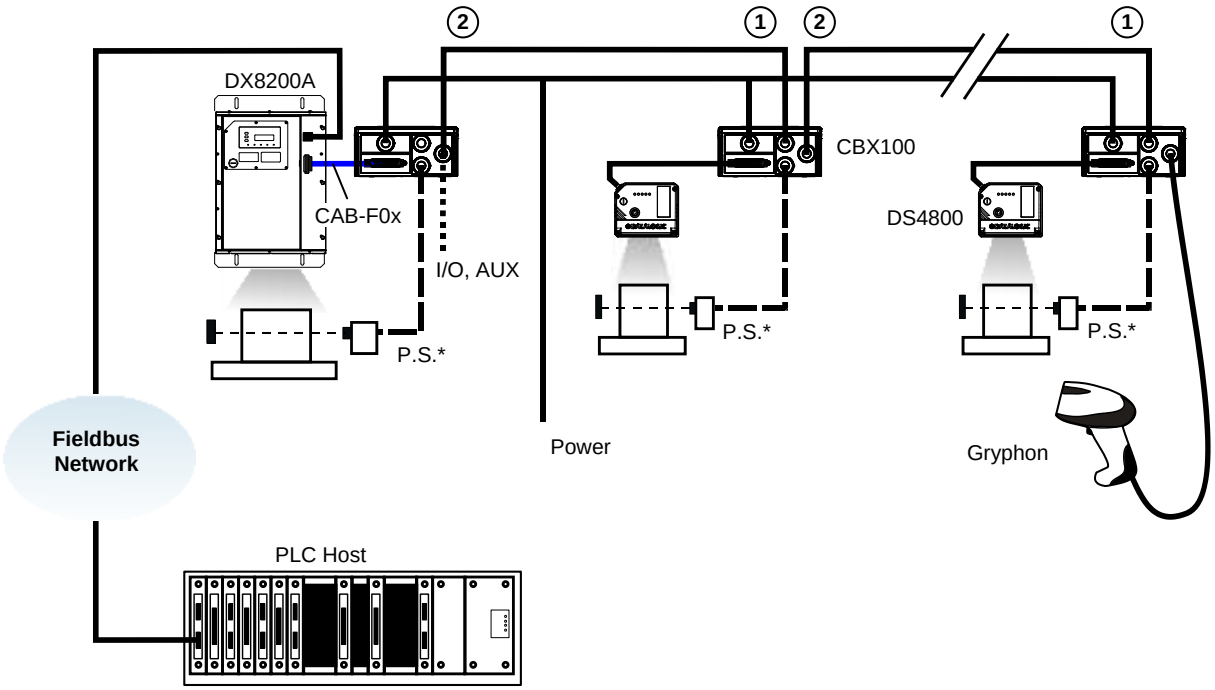

(1) Main Serial Interface (2) Auxiliary Serial Interface

* P.S. (Presence Sensor) connected to Input 1 (External Trigger/PS) input.

Figure 103 – Pass Through Connection for Fieldbus Models

RS232 MASTER/SLAVE

The RS232 master/slave connection is used to integrate a DX8200A reader in a network consisting of different scanners not provided with a Lonworks interface.

The Slave scanners use RS232 only on the main and auxiliary interfaces. Each slave scanner transmits the messages received by the auxiliary interface onto the main interface. All messages will be transferred towards the master.

The master scanner is connected to the Host PC on the main RS232 serial interface through the CBX connection box.

In RS232 Master/Slave connections the External Trigger/PS signal is unique to the system (single P.S.).

NOTE	*The **DX8200A Standard model**, working as Master in an RS232 network, may be simultaneously connected to a Lonworks network consisting of DX8200A slave scanners. Be careful when assigning the slave address, since the number of the first Lonworks slave must be a progressive number with respect to the address number defined for the last slave scanner of the RS232 network. For example, if the RS232 network consists of Slave 1 and Slave 2, the address to be assigned to the first Lonworks slave scanner will be Slave 3 (not Slave 1).*

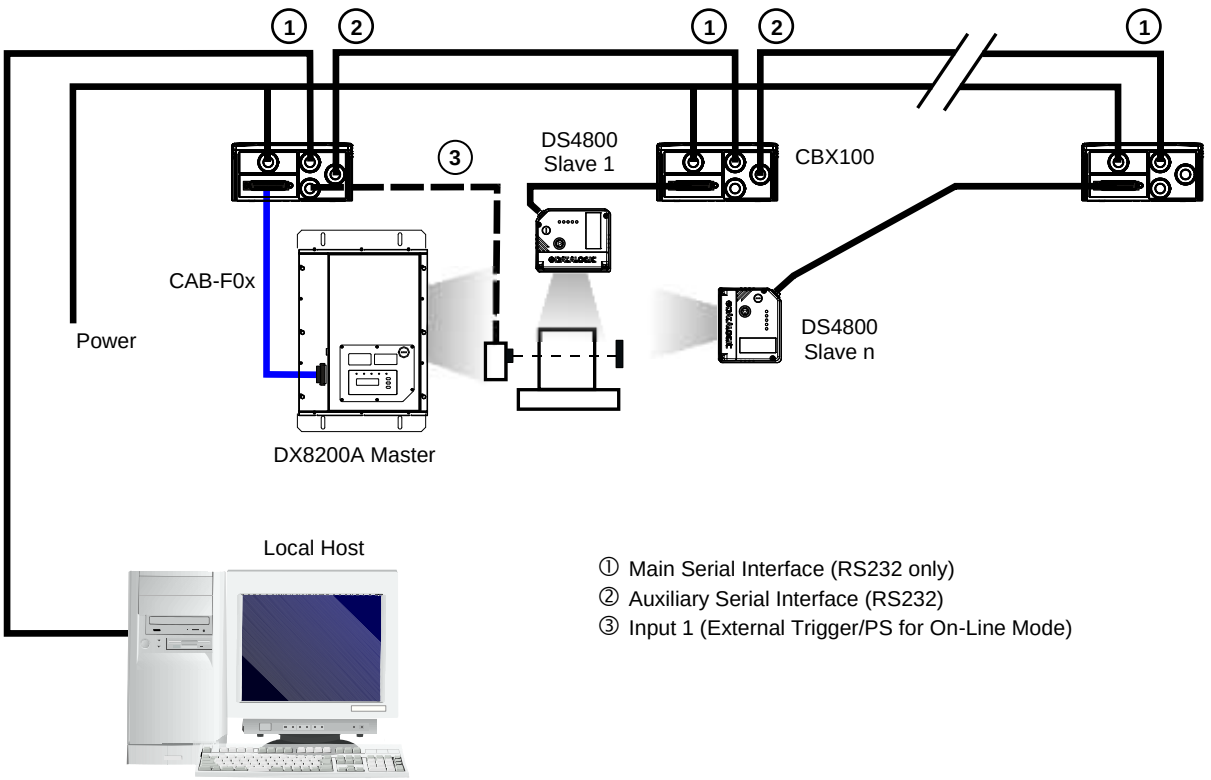

Figure 104 – RS232 Master/Slave for DX8200A Standard Models

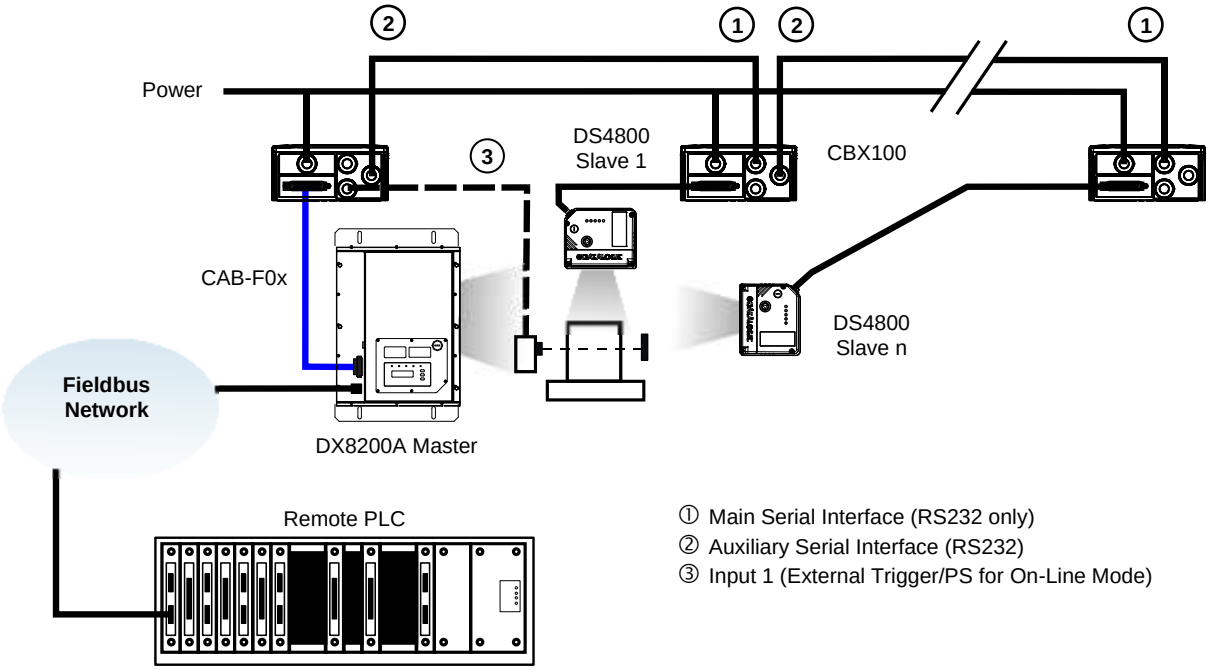

Figure 105 – RS232 Master/Slave for DX8200A Fieldbus Models

MULTIPLEXER

The Multiplexer connection is used to integrate a DX8200A slave reader in a Multidrop network consisting of different scanners not provided with a Lonworks interface.

Each scanner is connected to a Multiplexer (MX4000) with the RS485 half-duplex main interface.

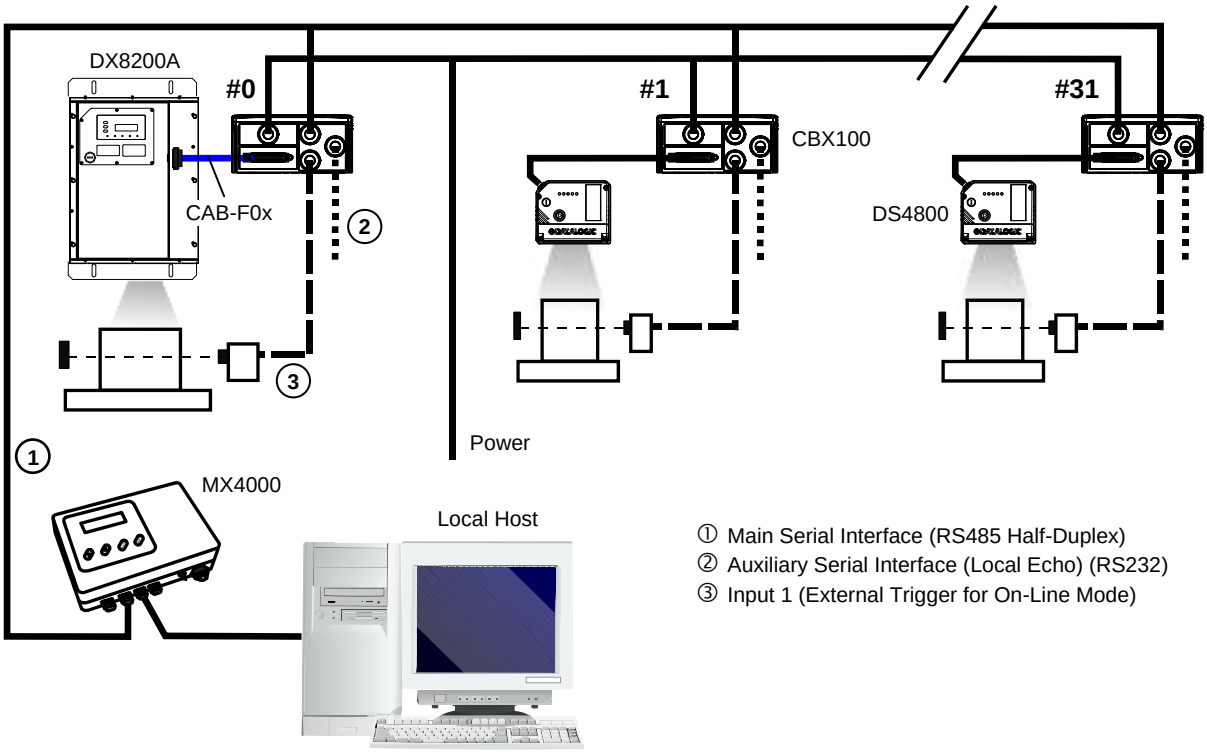

Figure 106 – Multiplexer for DX8200A Standard Models

The auxiliary serial interface of the slave scanners can be used to visualize collected data or to configure it using the Genius™ utility.

When On-Line operating mode is used, the scanner is activated by an External Trigger/PS when the object enters its reading zone.

GLOSSARY

ACR™ 4

Each version of the base has the powerful code reconstruction technology (ACR™ 4). The new fourth generation ACR™ considerably increases the code reconstruction reading capability in the case of damaged or very tilted barcodes.

Aperture

Term used on the required CDRH warning labels to describe the laser exit window.

Barcode

A pattern of variable-width bars and spaces which represents numeric or alphanumeric data in machine-readable form. The general format of a barcode symbol consists of a leading margin, start character, data or message character, check character (if any), stop character, and trailing margin. Within this framework, each recognizable symbology uses its own unique format.

Barcode Label

A label that carries a barcode and can be affixed to an article.

Baud Rate

A unit used to measure communications speed or data transfer rate.

CDRH (Center for Devices and Radiological Health)

This organization (a service of the Food and Drug Administration) is responsible for the safety regulations governing acceptable limitations on electronic radiation from laser devices. Datalogic devices are in compliance with the CDRH regulations.

CD SQUARE™

CD SQUARE™ provides useful information on label position and object shape elaborated during the barcode reading phase. This innovative technology identifies the area in which the code is located and measures the code distance from the scanner.

EEPROM

Electrically Erasable Programmable Read-Only Memory. An on-board non-volatile memory chip.

Full Duplex

Simultaneous, two-way, independent transmission in both directions.

Half Duplex

Transmission in either direction, but not simultaneously.

Host

A computer that serves other terminals in a network, providing services such as network control, database access, special programs, supervisory programs, or programming languages.

Interface

A shared boundary defined by common physical interconnection characteristics, signal characteristics and meanings of interchanged signals.

LED (Light Emitting Diode)
A low power electronic device that can serve as a visible or near infrared light source when voltage is applied continuously or in pulses. It is commonly used as an indicator light and uses less power than an incandescent light bulb but more than a Liquid Crystal Display (LCD). LEDs have extremely long lifetimes when properly operated.

Multidrop Line
A single communications circuit that interconnects many stations, each of which contains terminal devices. See RS485.

PackTrack™
PackTrack™ is a Datalogic patented parcel tracking system which improves the reading features in omnidirectional stations. In particular, PackTrack™ manages 6-sided reading systems when it is impossible to detect the real position of the code on the parcel, thus overcoming the need for external accessories essential in traditional tracking systems.

Parameter
A value that you specify to a program. Typically parameters are set to configure a device to have particular operating characteristics.

Position
The position of a scanner or light source in relation to the target of a receiving element.

Protocol
A formal set of conventions governing the formatting and relative timing of message exchange between two communicating systems.

Resolution
The narrowest element dimension which can be distinguished by a particular reading device or printed with a particular device or method.

RS232
Interface between data terminal equipment and data communication equipment employing serial binary data interchange.

RS485
Interface that specifies the electrical characteristics of generators and receivers for use in balanced digital multipoint systems such as on a Multidrop line.

Scanner
A device that examines a printed pattern (barcode) and either passes the uninterpreted data to a decoder or decodes the data and passes it onto the Host system.

Serial Port
An I/O port used to connect a scanner to your computer.

Signal
An impulse or fluctuating electrical quantity (i.e.: a voltage or current) the variations of which represent changes in information.

Symbol
A combination of characters including start/stop and checksum characters, as required, that form a complete scannable barcode.

Trigger Signal
A signal, typically provided by a photoelectric sensor or proximity switch, which informs the scanner of the presence of an object within its reading zone.

UPC
Acronym for Universal Product Code. The standard barcode type for retail food packaging in the United States.

Visible Laser Diode
A light source used in scanners to illuminate the barcode symbol. Generates visible red light at wavelengths between 630 and 680 nm.

INDEX

A

Accessories, 11
ACR™ 4, 81
Alternative Layouts, 110
Auto PackTrack
  Conditions and Limits, 6
  Parameter Descriptions, 7
  Setup Procedure, 8
  Setup using Keypad, 5
Auto PackTrack™
  Calibration using DLAPC, 84
  Conditions and Limits, 84
  Parameter Descriptions, 85
  Report, 90
  Setup Procedure, 87
Auxiliary RS232 Interface, 24, 40

C

CBX Electrical Connections, 16
CE Compliance, ix
Cleaning, 103
Code Verifier, 29, 43
Compliance, vii
Custom Cable Electrical Connections, 33

D

DeviceNet Interface, 53

E

Electrical Safety, vii
Ethernet Interface, 50
Ethernet Interface (older models), 51

F

FCC Compliance, ix
Fieldbus Connections, 50

G

Genius™
  Advanced Configuration, 73
  Installation, 65
  Wizard for Quick Reader Setup, 65
Glossary, 117
Guide to Installation, xiii

I

Indicators, 3
Inputs, 25, 40
Installation, 13

K

Keypad and Display, 4

L

Laser Safety, vii
LEDs, 3
Line Fuse Replacement, viii
Local Lonworks Network Layouts, 55
Lonworks Connections, 46
Lonworks Interface, 48

M

Main Serial Interface, 19, 35
Mounting the Scanner, 14

N

Network Setup, 68
Network Termination, 47

O

Operating Mode
  Automatic, 67
  On Line, 67
  Test, 66
Outputs, 29, 43

P

Package Contents, 13
PackTrack™, 82
PackTrack™ Calibration for DX8200A, 91
Parameter Explorer Window, 73
Parameter Groups
  Default Values, 76
Patents, vi
Power Supply, viii, 18, 34
Profibus Interface, 54

R

Reading Diagrams, 99
Reading Features, 81

Reference Documentation, vi
RS232 Interface, 20, 36
RS485 Full-Duplex, 21, 37
RS485 Half-Duplex, 22, 38

S

Scanner Assignment using Keypad, 4
Scanner Direction, 92
Scanner Replacement, 103
Software Configuration, 65
Support Through The Website, vi

T

Technical Features, 108
Terminators, 47
Test Mode using Keypad, 5
Troubleshooting, 105
Typical Layouts, 55

DATALOGIC

www.datalogic.com