LSLV

H100

Fan and Pump Drive

0.75~18.5kW 3-Phase 200~240V
0.75~90kW 3-Phase 380~480V
110~500kW 3-Phase 380~500V

GOOD DESIGN

LSIS

AKSA OTOMASYON

Innovative Energy Reduction:
The LSIS H100 drive solution is here for you.

The LSLV-H100 sets the standard for the drive industry. Environmentally friendly water treatment and Fan and Pump systems incorporate the outstanding energy-saving benefits of the LSLV-H100 for fans and pumps.

AKSA OTOMASYON

Fan and Pump Drive

LSLV H100

Maximized User Convenience

- Communication Module Exclusive for Fan and Pump-BACnet
- Global Specifications Compliant-UL Plenum Rated

Efficient Use of Space

- Side-by-Side Installation
- Reduced Size

Stable System Control

- Soft Fill Control
- Multiple-motor Control
- Fire Mode

Scan the QR code on your drive front and check the key use information!

Contents

- LSLV-H100 Features 04
- Model and Type 12
- Specifications 13
- Terminal Configuration 15
- Function Codes 20
- Dimensions 56
- DB Resistance 76

AKSA OTOMASYON

Maximized User Convenience

LSLV-H100 drives include a user-friendly keypad designed exclusively for the Fan and Pump market and satisfy various needs of customers.

Keypad Exclusive for Fan and Pump

Used to issue commands, configure drive parameters, and for monitoring drive status

- HAND Mode (Local Control Mode) or AUTO Mode (Remote Control Mode) can be selected.
  - HAND Mode: Used when selecting frequency or run/stop commands.
  - AUTO Mode: Drive operated using the keypad, multifunctional terminal block and communications.
- Fault Status Monitoring

Cancel (ESC) Key
- While in the Edit state, previously saved data are used
- When pressed while switching codes within the group, it is switched to the very first mode of group.
- When pressed while switching modes, it reverts back to the monitor mode.

Program (PROG/ENT) Key
- When pressed once, it is changed to Parameter Edit state.
- When pressed after changes, the changed data are saved.

Left/Right Key
- It is used to switch between groups. (Cursor is used under the Edit state.)

Up/Down Key
- It is used to switch between codes and edit data values.

Hand (HAND) Key
- It is used to select Keypad (HAND) operation
- Speed control (HAND key UP/DOWN)

Auto (OFF) Key
- Off mode or fault reset

Multifunction (MULTI) Key
- It is used to register user codes.

Auto (AUTO) Key
- It is used to select AUTO operation.

Built-in EMC Filter

A built-in EMC filter to respond to the specifications for noise reduction

- 400V 0.75~30kW, 110~500kW Built-in as default (C3)
- 400V 37~55kW Built-in option can be selected (C3)

※ 75~90kW satisfies EMC specifications even without a filter.

Global Specifications Compliant

UL Plenum Rated

(American standards for conditioner fire safety)

※ Suitable for installation in a Compartment Handing Conditioned Air

AKSA OTOMASYON

Communication Module

- RS-485 capability is built-in: Modbus-RTU, Metasys N2
- BACnet MS/TP is embedded as standard
- LonWorks option can be added

Easy to Change Cooling Fan

It is easy to change a cooling fan without opening the cover of a drive.

DC Reactor

A built-in DC Reactor effective to improve power factor and reduce THD is installed.

- DC Reactor built-in as standard for 400V 37~500kW

Specification Level Option (Conduit Kit)

Acquired UL open type & enclosed type 1 certification

- When the conduit option is used, the drive meets UL Enclosed Type 1 specifications

Flange Type

If the space is too small, a heat sink can be installed outside the panel.
(Exposed parts satisfy IP54.)

Software Exclusive for LS Drives

DriveView7 can be connected using USB Port or RJ45 terminal.

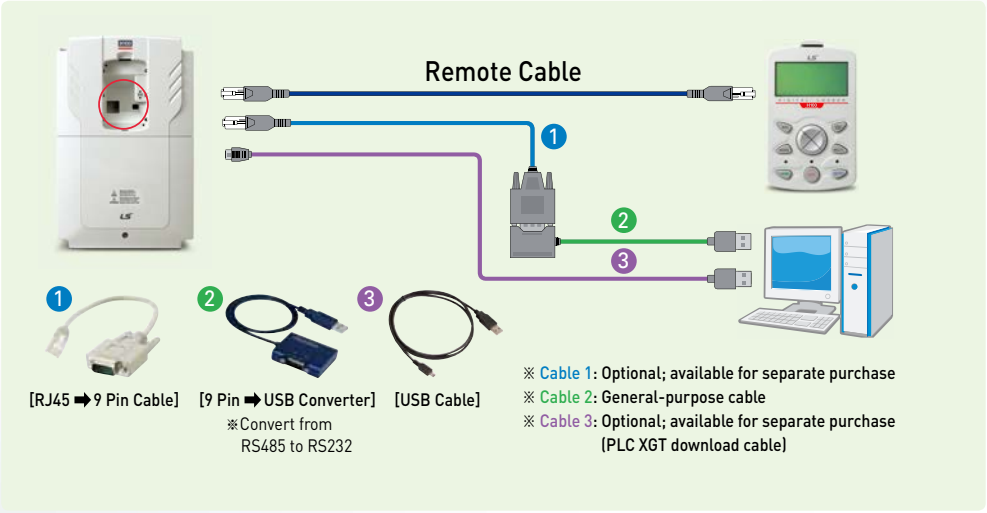

AKSA OTOMASYON

Maximized User Convenience

LSLV-H100 drives improve user convenience with smart copier.

Power-free Operation

Drive functions under the power-free state.

LED Feedback

LED is on in case of normal operation;
LED is flickering if errors such as communication occur.

Parameters Read/Write

It is possible to read and write parameters saved in a drive or a smart copier.

Easy to Install

Parameter saved in the smart copier can be downloaded to both the drive I/O and the control part.

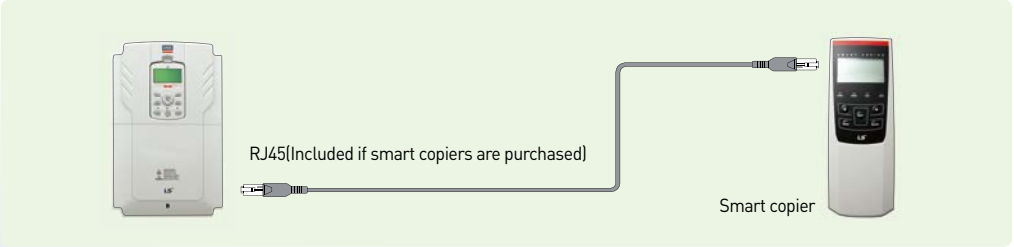

Data Flow in Smart Copier

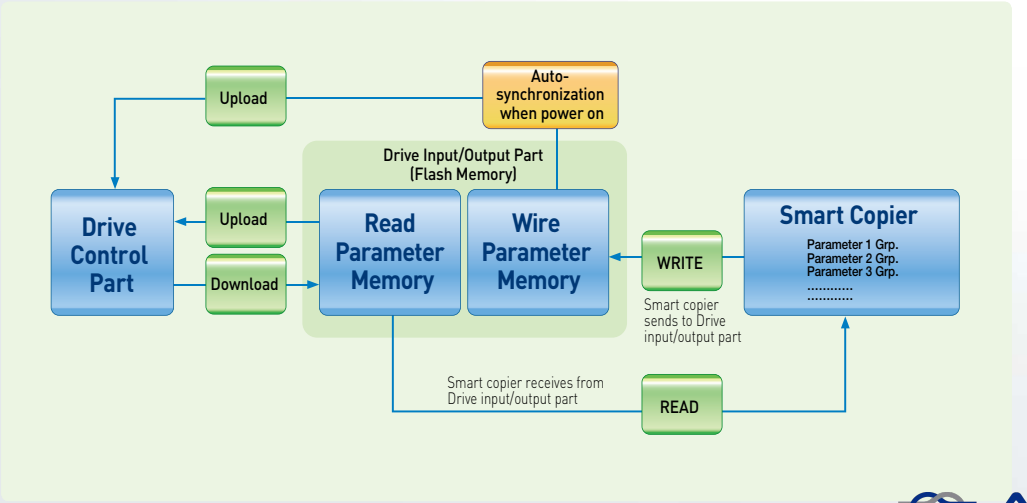

AKSA OTOMASYON

Efficient Use of Space

LSLV-H100 drives are miniaturized to reduce the space for installation, allowing the effective configuration of environment inside and outside a control panel.

Reduced Size

Main components are optimally deployed through thermal radiation analysis and 3D design to reduce size by **34%** compared to iP5A (Volume based).

Side-by-Side Installation

The size of control board is significantly reduced when multiple drives are installed by minimizing distance between products installed.

※ Side-by-side installation is unavailable for 37~500kW

Stable System Control

LSVL-H100 drives are intelligent drives equipped with various protective and operation functions for continuously stable operation in response to external environmental changes.

Soft Fill Operation

Prevents pump damages caused by dramatic pressure changes during initial operation of pumps or inside pumps.

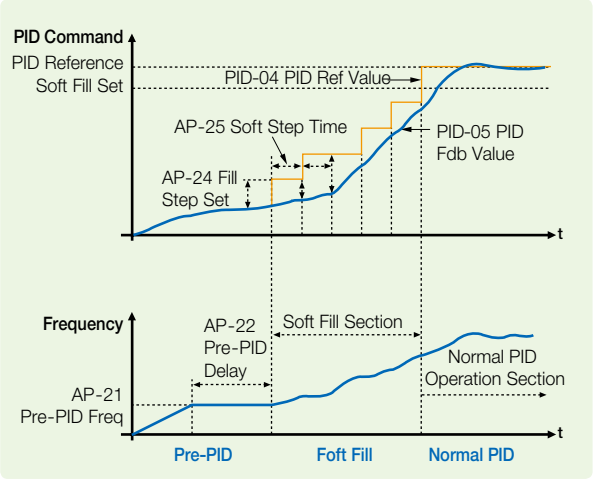

Start Ramp & End Ramp

Prevents pump damage by changing ramp using acceleration/ deceleration time setting upon initial pump operation and stop.

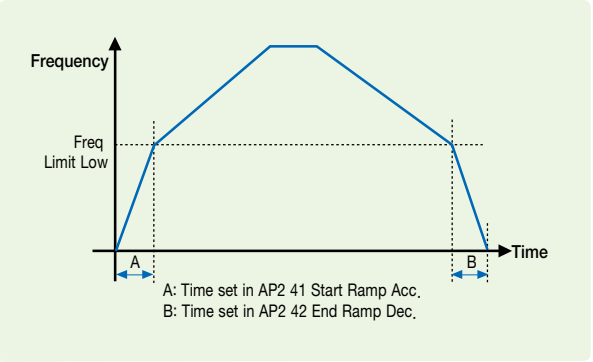

Dec Valve Ramp

Prevents pump and pipe damages caused by sudden pressure changes when pumps are stopped or a pump valve is closed, deceleration time can be set.

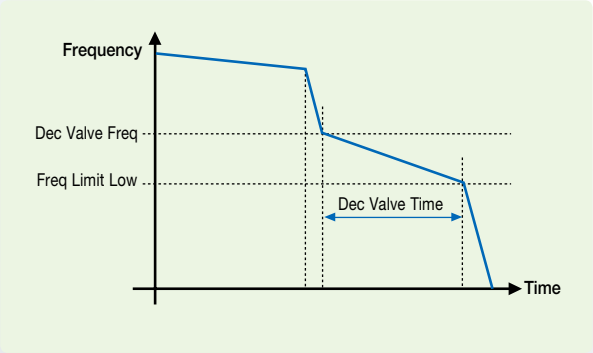

AKSA OTOMASYON

Multi Motor Control

MMC is used when a single drive is used to control multiple motors in pump systems.
It can control 1 main motor and 5 auxiliary motors.

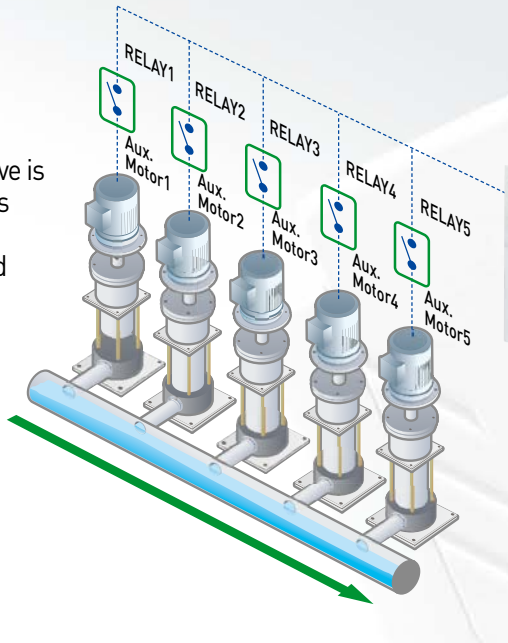

Scheduling (Time Event: Real Time Clock)

RTC (Real Time Clock) is used so that selected functions are operable during the set time.
(Possible to set different functions including Fx, Rx, multiple acceleration/deceleration time, multiple frequency, PID related functions and pre-heat.)

- Pre-Heat
- Fx
- Speed-L
- Speed-H

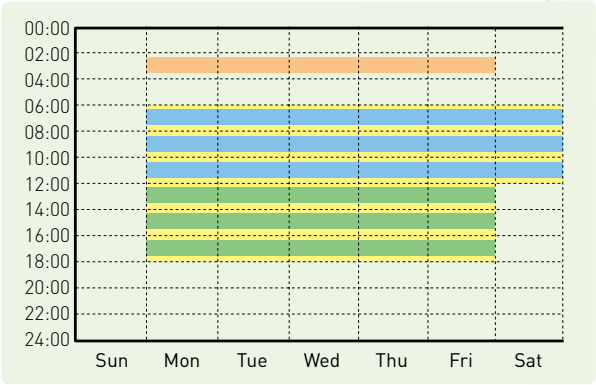

Flow Compensation

Compensates for hydraulic loss that occurs when the length of pipes is long, adding compensation rate depending on the inverter output frequency.

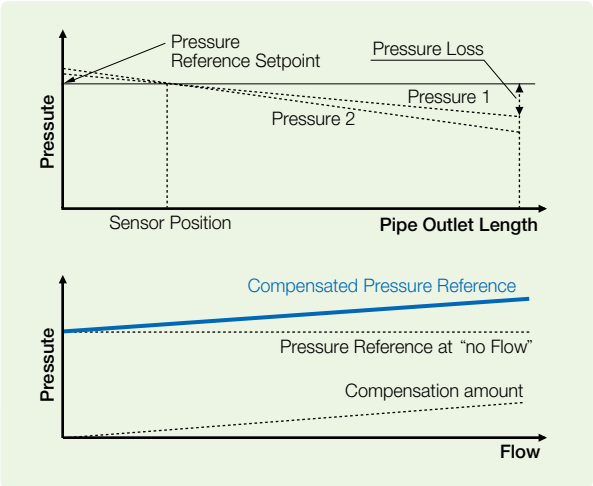

Stable System Control

With reinforced system-based functions and performance, LSVL-H100 drives not only provide optimum solution to applications for cooling/heating and water treatment, but also ensure energy saving and pleasant environment.

Pump Clean

Upon pump operation, the efficiency of pumps may decline when foreign substances are stuck in an impeller. Pump Clean removes the foreign substances to extend the pump life and reduce any loss.

Aux Motor PID Compensation

Pipe flow increases and conduit pressure decreases as the number of auxiliary motors increases. To compensate this', Aux Motor PID Compensation'is used to compensate pressure loss suitable for the given motor when operating auxiliary motors.

Load Tuning

Establishes load (current & power) curves based on drive frequency so as to make load characteristics curve required for 'Under Load' and 'Pump Clean.'

Fire Mode

When an emergency such as fire occurs at suction/exhaust fans, but hardware did not fail nor had a critical defect, the drive is continuously operated to protect other systems under the set frequency and direction.

Energy-saving Display (Payback Counter)

Commercial energy consumption is compared to the amount of energy used by the drive to calculate the amount of energy saved.

Power-on Resume

When the drive restarts after it was stopped due to power interruption upon communication control', Power-on Resume'is used to follow the previous control command.

Sleep, Sleep Boost, Wake-up

It is used to put the drive on standby and restarts it using PID in order to reduce motor loss as much as possible.

AKSA OTOMASYON

Auto Torque Boost

The drive outputs voltage for the drive by controlling the level of boost to fit the load by itself.

Lubrication Control

When a control command is made in the Flow/Oiling Systems, lubrication signals are output for a certain period before the motors are started. Drive control is immediately started from the signal output point until the signals are turned off after the set time.

Damper Control

When a Damper exists in the system configuration, the drive will command the Damper to open/close or receive feedback signals for protection.

Level Detection

When the drive is operated under frequency that is beyond the set frequency and source (voltage, current, and etc.) values to be detected are above or below the user set values, it generates a trip or activates a relay for protective operation.

Detection of Pipe Broken

Upon PID operation, pipe damages or leakage is detected to display a warning or a trip.

Under Load Protection

When running pumps including No Flow and Dry Pumps under the set frequency, the drive issues warning functions; and when trip is generated, Free-Run, deceleration, or stop can be selected via parameters.

Pre-Heat

Pre-heats motors by outputting direct current when the motors are at fixed time state in order to prevent condensation of the motors.

KEB, Kinetic Energy Buffering

Upon loss or momentary interruption of input power, if KEB is set, the drive maintains DC Link Voltage using regeneration energy of the motor is used during the interruption period.

Macro Setting

If a particular application is selected, frequently used parameters and set values are changed and registered in a macro group.

AKSA OTOMASYON

Model & Type

Motor Rating	3-Phase 200V	3-Phase 400V	
0.75 kW	LSLV0008H100-2CONN	LSLV0008H100-4COFN	
1.5 kW	LSLV0015H100-2CONN	LSLV0015H100-4COFN	
2.2 kW	LSLV0022H100-2CONN	LSLV0022H100-4COFN	
3.7 kW	LSLV0037H100-2CONN	LSLV0037H100-4COFN	
5.5 kW	LSLV0055H100-2CONN	LSLV0055H100-4COFN	
7.5 kW	LSLV0075H100-2CONN	LSLV0075H100-4COFN	
11 kW	LSLV0110H100-2CONN	LSLV0110H100-4COFN	
15 kW	LSLV0150H100-2CONN	LSLV0150H100-4COFN	
18.5 kW	LSLV0185H100-2CONN	LSLV0185H100-4COFN	
22 kW		LSLV0220H100-4COFN	
30 kW		LSLV0300H100-4COFN	
37 kW		LSLV0370H100-4COND	LSLV0370H100-4COFD
45 kW		LSLV0450H100-4COND	LSLV0450H100-4COFD
55 kW		LSLV0550H100-4COND	LSLV0550H100-4COFD
75 kW		LSLV0750H100-4COND	
90 kW		LSLV0900H100-4COND	
110kW		LSLV1100H100-4COFD	
132kW		LSLV1320H100-4COFD	
160kW		LSLV1600H100-4COFD	
185kW		LSLV1850H100-4COFD	
220kW		LSLV2200H100-4COFD	
250kW		LSLV2500H100-4COFD	
315kW		LSLV3150H100-4COFD	
355kW		LSLV3550H100-4COFD	
400kW		LSLV4000H100-4COFD	
500kW		LSLV5000H100-4COFD	

※75~90kW satisfies EMC class 3

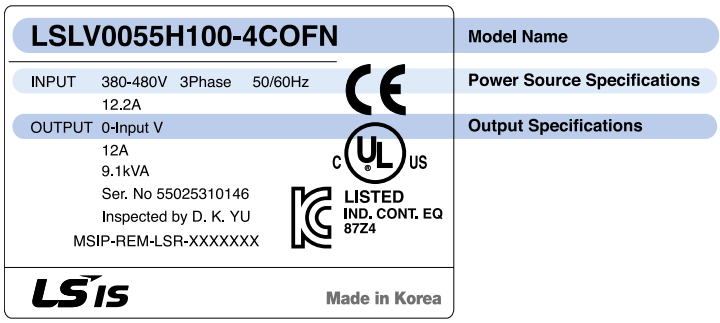

LSLV 0055 H100 – 4 C O F N

Series Name: H100

Motor Capacity

0008-0.75kW	0150-15kW	0750-75kW	2500-250kW
0015-1.5kW	0185-18.5kW	0900-90kW	3150-315kW
0022-2.2kW	0220-22kW	1100-110kW	3550-355kW
0037-3.7kW	0300-30kW	1320-132kW	4000-400kW
0055-5.5kW	0370-37kW	1600-160kW	5000-500kW
0075-7.5kW	0450-45kW	1850-185kW	
0110-11kW	0550-55kW	2200-220kW	

Input Voltage
- 2: 3-Phase 200V
- 4: 3-Phase 400V

Keypad Type
- C: LCD Keypad

UL Type
- O: UL Open
- E : UL Type1

EMC Filter
- F: Built-in EMC
- N: Non EMC

Reactor
- D: Built in DC Reactor
- N: Non DC Reactor

AKSA OTOMASYON

Input & Output Specification Energy Saving

3-Phase 200V (0.75~18.5kW)

Model Name LSLV□□□□H100-2□□□□		0008	0015	0022	0037	0055	0075	0110	0150	0185
Applied Motor	HP	1.0	2.0	3.0	5.0	7.5	10	15	20	25
	kW	0.75	1.5	2.2	3.7	5.5	7.5	11	15	18.5
Rated Output	Rated Capacity (kVA)	1.9	3.0	4.5	6.1	8.4	11.4	16.0	21.3	26.3
	Rated Current	5	8	12	16	22	30	42	56	69
	Output Frequency	0~400Hz								
	Output Voltage (V)	3-Phase 200~240V								
Rated Input	Service Voltage (V)	3-Phase 200~240VAC (-15%~+10%)								
	Input Frequency	50~60Hz(5%)								
	Rated Current (A)	4.9	8.4	12.9	17.5	23.7	32.7	46.4	62.3	77.2
Weight (kg)		3.3	3.3	3.3	3.3	3.3	3.3	3.3	4.6	7.1

- Motor capacity is based on use of 4-pole standard motors.
- 200V Class is for 220V and 400V Class is for 440V.
- Rated output current is limited depending on the carrier frequency (CON-04) setting.

3-Phase 400V (0.75~22kW)

Model Name LSLV□□□□H100-4□□□□		0008	0015	0022	0037	0055	0075	0110	0150	0185	0220
Applied Motor	HP	1.0	2.0	3.0	5.0	7.5	10	15	20	25	30
	kW	0.75	1.5	2.2	3.7	5.5	7.5	11	15	18.5	22
Rated Output	Rated Capacity (kVA)	1.9	3.0	4.5	6.1	9.1	12.2	18.3	23.0	29.0	34.3
	Rated Current	2.5	4	6	8	12	16	24	30	38	45
	Output Frequency	0~400Hz									
	Output Voltage (V)	3-Phase 380~480V									
Rated Input	Service Voltage (V)	3-Phase 380~480VAC (-15%~+10%)									
	Input Frequency	50~60Hz(5%)									
	Rated Current (A)	2.4	4.2	6.5	8.7	12.2	17.5	26.5	33.4	42.5	50.7
Weight (kg)		3.3	3.3	3.3	3.3	3.3	3.3	3.4	4.6	4.8	7.5

- Motor capacity is based on use of 4-pole standard motors.
- 200V Class is for 220V and 400V Class is for 440V.
- Rated output current is limited depending on the carrier frequency (CON-04) setting.

3-Phase 400V (30.0~90.0kW))

Model Name LSLV□□□□H100-4□□□□		0300	0370	0450	0550	0750	0900
Applied Motor	HP	40	50	60	75	100	125
	kW	30	37	45	55	75	90
Rated Output	Rated Capacity (kVA)	46.5	57.1	69.4	82.0	108.2	128.8
	Rated Current	61	75	91	107	142	169
	Output Frequency	0~400Hz					
	Output Voltage (V)	3-Phase 380~480V					
Rated Input	Service Voltage (V)	3-Phase 380~480VAC(-15%~+10%)					
	Input Frequency	50~60Hz(±5%)					
	Rated Current (A)	69.1	69.3	84.6	100.1	133.6	160.0
Weight (kg)		7.5	26	35	35	43	43

- Motor capacity is based on use of 4-pole standard motors.
- 200V Class is for 220V and 400V Class is for 440V.
- Rated output current is limited depending on the carrier frequency (CON-04) setting.

3-Phase 400V (110.0~500.0kW)

Model Name LSLV□□□□H100-4□□□□		1100	1320	1600	1850	2200	2500	3150	3550	4000	5000
Applied Motor	HP	150	200	250	300	350	400	500	550	650	800
	kW	110	132	160	185	220	250	315	355	400	500
Rated Output	Rated Capacity (kVA)	170	201	248	282	329	367	467	520	587	733
	Rated Current	223	264	325	370	432	481	613	683	770	962
	Output Frequency	0~400Hz									
	Output Voltage (V)	3-Phase 380~500V									
Rated Input	Service Voltage (V)	3-Phase 380~500VAC(-15%~+10%)									
	Input Frequency	50~60Hz(±5%)									
	Rated Current (A)	215.1	254.6	315.3	358.9	419.1	469.3	598.1	666.4	751.3	938.6
Weight (kg)		55.8	55.8	74.7	74.7	120.0	120.0	185.5	185.5	185.5	265

- Motor capacity is based on use of 4-pole standard motors.
- 200V Class is for 220V and 400V Class is for 440V.
- Rated output current is limited depending on the carrier frequency (CON-04) setting.

AKSA OTOMASYON

Product Details

Item			Description	
Control	Control Mode		V/F control, slip compensation	
	Frequency Set Resolution		Digital command: 0.01Hz	
			Analog command: 0.06Hz (based on 60Hz)	
	Control Degree of Frequency		1% of the maximum output frequency	
	V/F Pattern		Liner, squared overload reduction and user V/F	
	Overload Capacity		0.75~90kW	Rated Current: 120% 1 minute
			110~500kW	Rated Current: 110% 1 minute
	Torque Boost		Manual torque boost, Automatic torque boost	
Control (Operation)	Drive Mode		Optional: Keypad, terminal board or communication control	
	Frequency Setting		Analog mode: -10~10V, 0~10V, 0~20mA	
			Digital mode: Keypad and pulse train input	
	Control Functions		PID control, 3-Wire control, Frequency limitation, Secondary Functions, Forward/ Reverse rotation prohibited, DC braking, Commercial power switching, Speed search, Power braking, Reduction of leakage, Up-Down control, DC braking Flux braking, Frequency pump, Slip compensation, Automatic restart, Automatic tuning, Energy buffering control, Energy-saving control	
	Input	Multifunctional Terminal (7 points)	The following functions can be set using IN-65~71 code parameters between PNP(Source) and NPN(Sink).	
			Forward Operation, Reset, Emergency stop, Multi-step frequency – High/Mid/Low, DC braking during stop, Pre-Heat, Frequency increase, 3-Wire, Optional: Acceleration, deceleration or stop, MMC interlock, Reverse Operation, Pump cleaning, External trip, Jog control, Multi-step acceleration/deceleration-High/ Mid/Low, Secondary motor selection, RTC(Time event function), Frequency decrease, Analog command frequency fixation, Switching to normal operation during PID operation,	
		Pulse Train	0~32kHz, Low Level: 0~0.8V, High Level: 3.5~12V	
	Output	Multifunctional Open Collector Terminal	Failure output & drive control status output:	DC 26V, 50mA or below
		Failure (Fault) Relay Terminal		N.O. : AC 250V, 2A or below, DC30V, 3A or below N.C. : AC 250V, 1A or below, DC30V, 1A or below
		Multifunctional Relay Terminal		AC250V, 5A or below, DC30V, 5A or below
		Analog Output	0~12Vdc(0~20mA): Optional among frequency, output current, output voltage and DC voltage.	
		Pulse Train	Maximum 32kHz, 0~12V	
Protective Functions	Trip		Over-current trip, Trip caused by external signals, ARM short-circuit current trip, Overheat trip, Pipe broken trip, Input open-phase trip Ground trip, Motor overheat trip, IO board connection trip, No Motor trip, Parameter Write trip, Emergency stop trip, Command loss trip, External memory error, CPU watchdog trip, Motor under-load trip, Overvoltage trip, Temperature sensor trip, Drive overheat, Option trip, Output open-phase trip, Drive overload trip, Fan trip, Low voltage trip during operation, Low voltage trip, Analog input error, Motor overload trip, Keypad command loss trip, Damper trip, Level Detect trip, All auxiliary motor failure trip, Pump clean failure (fault)	
	Warning		Command loss trip warning, overload warning, under-load warning, drive overload warning, fan operation warning, damping resistance brake percentage warning, capacitor life warning, pump clean warning, Fire Mode warning and LDT warning	
	Instant Power Interruption		Below 8 ms: Continuous operation (within the rated input voltage and rated output) 8 ms or above: Automatic restart operation	
Structure/ Operational Environment	Cooling mode		Forced air-cooling	
	Protective structure		IP20/UL Open(default), UL Enclosed Type 1(option)	
	Ambient temperature		With no ice or frost at -10~50°C(14~122°F) (At 40°C or above, derating of 2.5%/°C current. At 50°C, 75% of the rated current is operable).	
	Ambient humidity		Relative humidity of 95% RH or below (without dew formation)	
	Storage temperature		-20 ~ 65 °C (-4~149°F)	
	Ambient environment		Without corrosive gas, combustible gas, sludge and dust (Pollution Degree 3 Environment)	
	Altitude		Maximum 1000m above sea level for standard operation. From 1000 to 4000m, the rated input voltage and rated output current of the drive must be derated by 1% for every 100m.	
	Vibration		9.8m/sec2(1.0G) or below	
	Ambient atmospheric pressure		70~106kPa	

AKSA OTOMASYON

Wiring

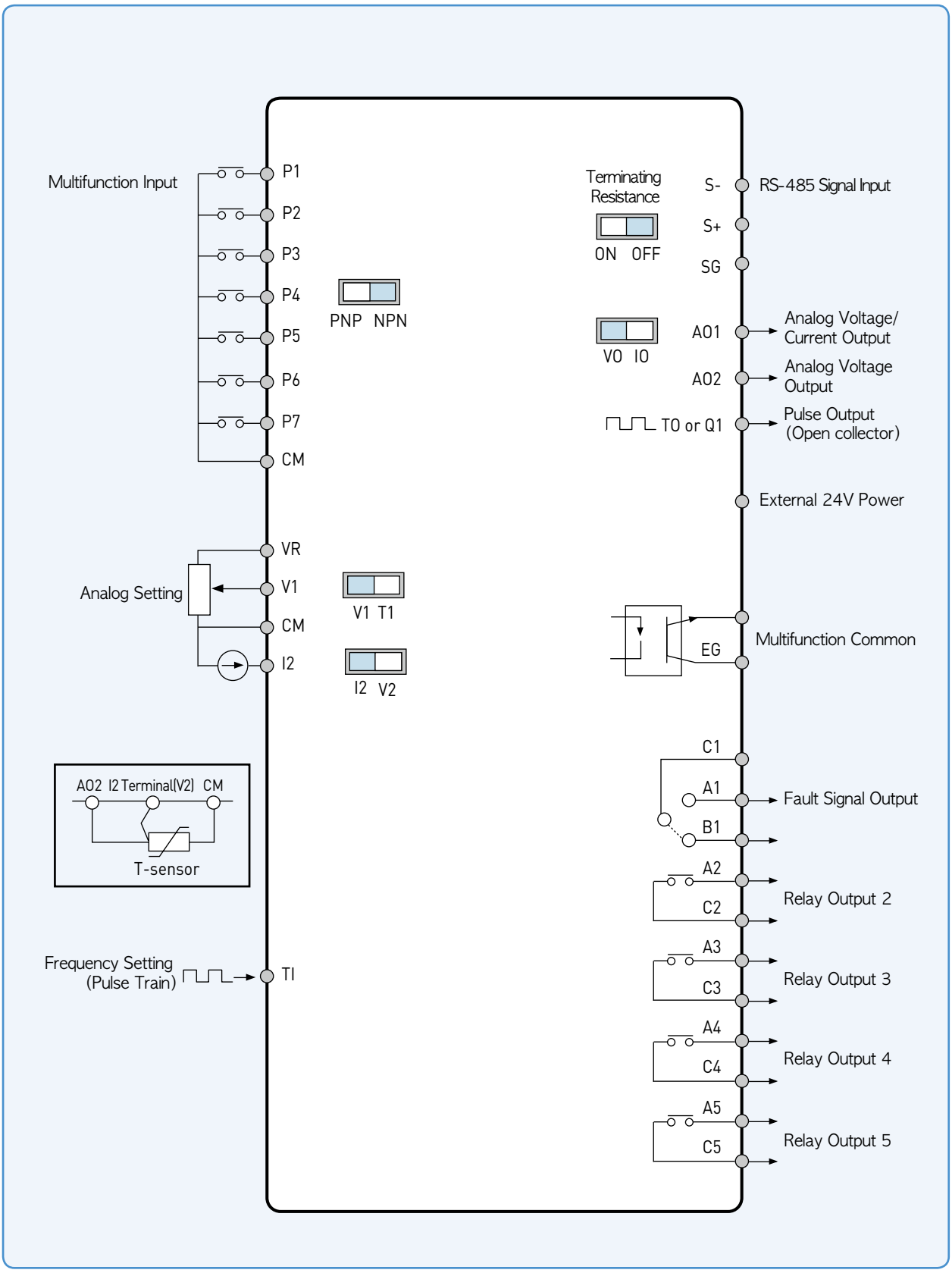

※The default value is displayed in blue color

Terminal Description

Input Terminal Marks & Details

Classification	Terminal Mark	Name	Description
Selection of Contact Points	P1-P7	Multifunctional Input 1~7 Terminal	It can be used by setting multifunctional input. Default values from the factory are as follows: • P1: Fx • P2: Rx • P3: BX • P4: RST • P5: Speed-L • P6: Speed-M • P7: Speed-H
	CM	Sequence Common Terminal	BCommon terminal of contact point input and analog I/O terminal
Analog Input	VR	Power Terminal for Frequency Setting	Power for analog frequency setting: • Max. output voltage: 12V • Max. output current: 12mA • Volume resistivity: 1~10kΩ
	V1	Frequency Setting(Voltage) Terminal	Frequency is set depending on the voltage supplied to V1 terminal. • Unipolar: 0~10V(Max. 12V) • Bipolar: -10~10V(Max. ±12V)
	I2	Frequency Setting (Current/Voltage) Terminal	Frequency is set depending on the current capacity supplied to I2 terminal. V2 can be used by selecting analog voltage/current input terminal setting switch (SW4). • nput current: 0~20mA • Max. input current: 24mA • Input resistance 249Ω
	TI	Frequency Setting (Pulse Train) Terminal	Frequency is set as 0~32kHz. Low Level : 0~0.8V, High Level : 3.5~12V

Output/Communication Terminal Marks & Details

Classification	Terminal Mark	Name	Description
Analog Output	AO	Voltage/Current Output Terminal	One of the following is chosen and output: Output frequency, output current, output voltage and DC voltage. The following voltage/current output can be chosen by selecting analog voltage/current output terminal setting switch (SW5). • Output voltage: 0~10V • Max. output voltage/current: 12V, 10mA • Output current: 0~20mA • Max. output current: 20mA • Factory default value: Frequency
Contact Point	Q1	Multifunctional (Open Collector) Output/ Pulse Output Terminal	As a multifunctional output signal or pulse output, one of the following is chosen: Output frequency, output current, output voltage and DC voltage. DC 26V, 50mA or below Pulse output terminal • Output frequency: 0~32kHz • Output voltage: 0~12V
	EG	Common Terminal	Common ground terminal for external power of open collector
	24	24V Power Terminal [Note]	• Max. output current: 100mA • Do not use external 24V except for PNP-mode terminal block
	A1/C1/B1	Abnormal Signal Output/Multifunctional Output Terminal	When power is cut-off to protect the product, signals or multifunctional signals are output. (N.O. : AC250V 2A or below, DC 30V 3A or below N.C. : AC250V 1A or below and DC 30V 1A or below) • At abnormal state: A1-C1 connected (B1-C1 disconnected) • At normal state: B1-C1 connected (A1-C1 disconnected) • Factory default value: Frequency
	A2/C2 – A5/C5	Multifunctional Relay Output A Contact Point	Multifunctional output terminal such as signals at operation is defined and used. (AC 250V 5A or below and DC 30V 5A or below)
	S+/S-/SG	RS-485 Signal Input Terminal	RS-485 signal line

[Note] Available only when used in PNP mode.

AKSA OTOMASYON

Control Circuit Terminal

Power Terminal Marks & Details

0.75~30kW(3-Phase)

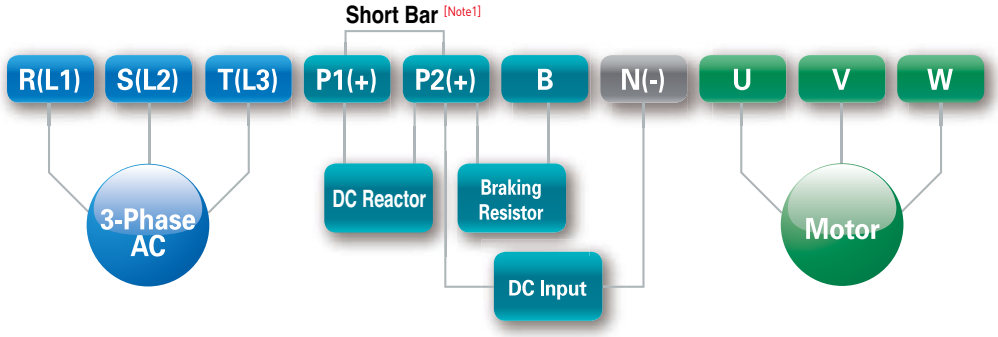

Terminal Mark	Name	Description
R(L1)/S(L2)/T(L3)	AC Power Input Terminal	It connects to commercial AC power.
P1+	+DC Link Terminal	+ DC voltage terminal: This terminal is used to connect an exterior DC reactor.
P2+	+DC Input Terminal	DC(+) is connected when DC is input via drive power.
N-	-DC Link Terminal	AC voltage terminal: DC(-) is connected when DC is input via drive power.
B	Braking Resistor Terminal	It connects to braking resistance.
U/V/W	Motor Output Terminal	It connects to 3-phase induction motor.

※ If you wish to start the drive using DC input, connect it to the P2(+), N(-) terminal.
Note 1) Short Bar should be removed when wiring DC Reactor.

37~90kW(3-Phase)

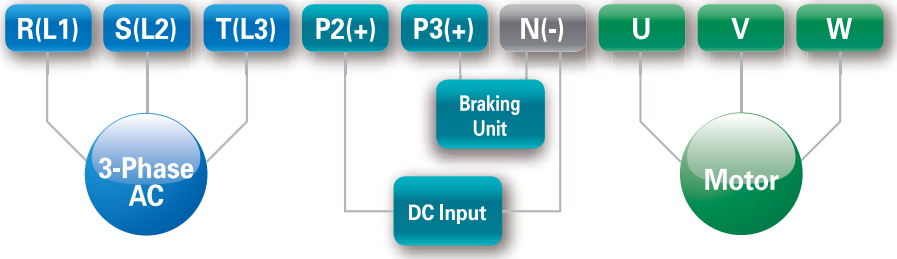

Terminal Mark	Name	Description
R(L1)/S(L2)/T(L3)	AC Power Input Terminal	It connects to commercial AC power.
P2+	+DC Link Terminal	+ DC voltage terminal: DC(+) is connected when DC is input via drive power.
P3+	+DC Input Terminal	+DC voltage terminal This terminal is used to connect DBU.
N-	-DC Link Terminal	DC voltage (-) terminal: DC(-) is connected when DC is input via drive power.
U/V/W	Motor Output Terminal	It connects to 3-phase induction motor.

※ If you wish to start the drive using DC input, connect it to the P2(+), N(-) terminal.

AKSA OTOMASYON

Control Circuit Terminal

Power Terminal Marks & Details

110~250kW (3-Phase)

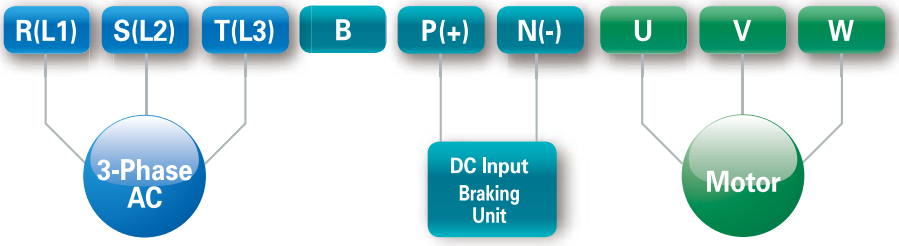

Terminal Mark	Name	Description
R(L1)/S(L2)/T(L3)	AC Power Input Terminal	It connects to commercial AC power.
B	Braking Resistor Terminal	It can not be used because it does not provide a braking unit
P(+)	+DC Link Terminal	+ DC voltage terminal: DC(+) is connected when DC is input via drive power.. DC(+) connects to DB Unit.
N(-)	- DC Link Terminal	- DC voltage terminal: DC(-) is connected when DC is input via drive power.
U/V/W	Motor Output Terminal	It connects to 3-phase induction motor.

※ If you wish to start the drive using DC input, connect it to the P2(+), N(-) terminal.

315~500kW (3-Phase)

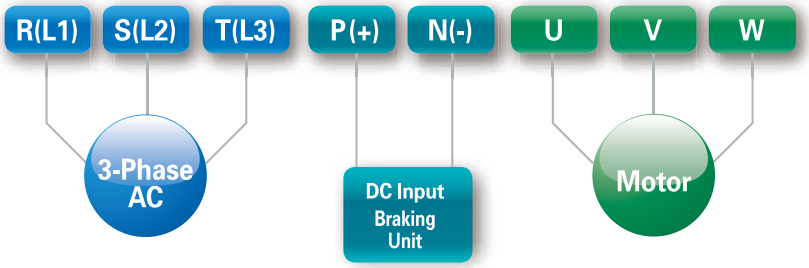

Terminal Mark	Name	Description
R(L1)/S(L2)/T(L3)	AC Power Input Terminal	It connects to commercial AC power.
P(+)	+DC Link Terminal	+ DC voltage terminal: DC(+) is connected when DC is input via drive power.. DC(+) connects to DB Unit.
N(-)	- DC Link Terminal	- DC voltage terminal: DC(-) is connected when DC is input via drive power.
U/V/W	Motor Output Terminal	It connects to 3-phase induction motor.

※ If you wish to start the drive using DC input, connect it to the P2(+), N(-) terminal.

AKSA OTOMASYON

Wires and Screw Specifications

Earth Wire & I/O Wiring Specifications

Product (kW)		Ground Wire		I/O Wiring			
		mm²	AWG	mm²		AWG	
				R/S/T	U/V/W	R/S/T	U/V/W
3-Phase 200V Class	0.75	3.5	12	1.5	1.5	16	16
	1.5						
	2.2						
	3.7			2.5	2.5	14	14
	5.5	10	10	4	4	12	12
	7.5			6	6	10	10
	11			10	10	8	8
	15	14	6	16	16	6	6
	18.5			25	22	4	4
3-Phase 400V Class	0.75	3.5	12	1.5	1.5	16	16
	1.5						
	2.2						
	3.7			2.5	2.5	14	14
	5.5	4	12	2.5	2.5	14	14
	7.5			4	2.5	12	14
	11			4	4	12	12
	15	16	9	6	6	10	10
	18.5			16	10	6	8
	22	14	6	16	10	6	8
	30			25	16	4	6
	37	25	4	25	25	4	4
	45			25	25	4	4
	55			50	50	1/0	1/0
	75	38	2	70	70	1/0	1/0
	90			70	70	1/0	1/0
	110	50×2	1×2	70×2	70×2	2/0×2	2/0×2
	132			95×2	95×2	3/0×2	3/0×2
	160	50×2, 70×2	1/0×2	95×2	95×2	3/0×2	3/0×2
	185	70×2, 95×2	3/0×2	120×2	120×2	4/0×2	4/0×2
	220	95×2	250×2	185×2	185×2	350×2	350×2
	250		300×2	185×2	185×2	350×2	350×2
	315	60×4, 150×2	2/0×4	95×4, 300×2	95×4, 300×2	3/0×4, 600×2	3/0×4, 600×2
	355	70×4, 150×2	3/0×4	120×4, 300×2	120×4, 300×2	4/0×4, 600×2	4/0×4, 600×2
	400	95×4, 200×2	4/0×4	120×4, 400×2	120×4, 400×2	4/0×4, 700×2	4/0×4, 700×2
	500	120×4, 250×2	4/0×4, 750×2	185×4, 630×2	185×4, 630×2	350×4, 1500×2	350×4, 1500×2

Wires and Screw Specifications

I/O Terminal Screw Specifications

Product (kW)		Terminal Screw Size	Screw Torque (Kgf.cm/Nm)
3-Phase 200V Class	0.75	M4	7.1~12.2/0.7~1.2
	1.5		
	2.2		
	3.7		
	5.5		
	7.5		
	11		
	15	M5	24.5~31.8/2.4~3.1
	18.5		

Product (kW)		Terminal Screw Size	Screw Torque (Kgf.cm/Nm)
3-Phase 400V Class	0.75	M4	7.1~12.2/0.7~1.2
	7.5		
	11		
	15	M5	24.5~31.8/2.4~3.1
	18.5		
	22		
	30		
	37	M8	61.2~91.8/6~9
	45		
	55		
	75		
	90		
	110	M10	89.7~122.0/8.8~11.96
	132		
	160	M12	182.4~215.0/17.87~21.07
	185		
	220		
	250		
	315		
	355		
	400		
	500		

Control Circuit Wiring Specifications

Item	Wire Thickness	
	mm²	AWG
P1~P7/CM/VR/V1/I2/24/TI	0.33~1.25	16~22
AO1/AO2/CM/Q1/EG	0.33~2.0	14~22
A1/B1/C1/A2/C2/A3/C3/A4/C4/A5/C5	0.33~2.0	14~22
S+, S-, SG	0.75	18

Control Circuit Terminal Screw Specifications

Terminal	Terminal Screw Size	Screw Torque(kgf.cm/Nm)
P1~P7/CM/VR/V1/I2/AO/Q1/EG/ 24/TI/TO/SA,SB,SC/S+,S-,SG	M2	2.2~2.5/0.22~0.25
A1/B1/C1	M2.6	4.0/0.4

PNP Mode (Source)

PNP/NPN setting switch (SW2) should be set as PNP. CM terminal is a common contact input signal terminal, and P24 terminal is a 24V internal power terminal. When external 24V is used, the external power terminal and the CM terminal should be connected.

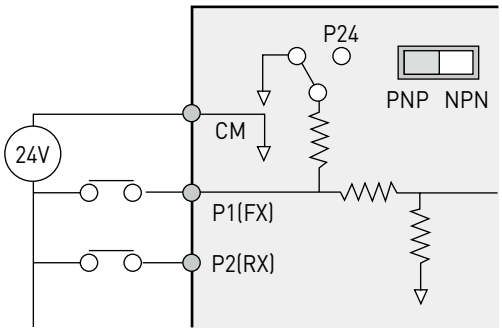

NPN Mode (Sink)

PNP/NPN setting switch (SW2) should be set as NPN. CM terminal is a common contact input signal terminal, and P24 terminal is a 24V internal power terminal. Initial setting when shipped out of the factory is NPN mode.

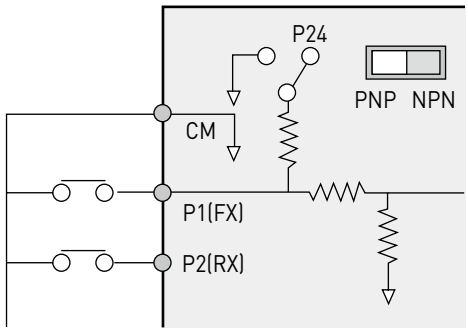

Group Drive (DRV)

Code	Comm. No.	Name	LCD Display	Set Range		Default		Attribute*
00	-	Jump code	Jump Code	1~99		9		O
01	0h1101	Target frequency	Cmd Frequency	0.00, Low Freq~High Freq		0.00		O
02	0h1102	Keypad run direction setting	Keypad Run Dir	0	Reverse	0		O
				1	Forward			
03	0h1103	Acceleration time	Acc Time	0,0-600,0(sec)		20.0	0.75~90kW	O
						60.0	110~250kW	
						100.0	315~500kW	
04	0h1104	Deceleration time	Dec Time	0,0-600,0(sec)		30.0	0.75~90kW	O
						90.0	110~250kW	
						150.0	315~500kW	
06	0h1106	Run command method	Cmd Source	0	Keypad	1: Fx/Rx-1		Δ
				1	Fx/Rx-1			
				2	Fx/Rx-2			
				3	RS-485			
				4	Field Bus			
				5	Time Event			
07	0h1107	Frequency setting method	Freq Ref Src	0	Keypad-1	0: Keypad-1		Δ
				1	Keypad-2			
				2	V1			
				4	V2			
				5	I2			
				6	Int 485			
				7	Field Bus			
				9	Pulse			
				10[1]	V3			
				11	I3			
09	0h1109	Control mode	Control Mode	0	V/F	0: V/F		Δ
				1	Slip Compen			
11	0h110B	Jog frequency	Jog Frequency	0,00, Low Freq~High Freq		10.00		O
12	0h110C	Jog acceleration time	Jog Acc Time	0,0-600,0(sec)		20.0		O
13	0h110D	Jog deceleration time	Jog Dec Time	0,0-600,0(sec)		30.0		O
14	0h110E	Motor capacity	Motor Capacity	0	0.2 kW(0.3HP)	Depen dent on motor setting		Δ
				1	0.4 kW([0.5HP)			
				2	0.75 kW(1.0HP)			
				3	1.1 kW(1.5HP)			
				4	1.5 kW(2.0HP)			
				5	2.2 kW(3.0HP)			
				6	3.0 kW(4.0HP)			
				7	3.7 kW(5.0HP)			
				8	4.0 kW(5.5HP)			
				9	5.5 kW(7.5HP)			
				10	7.5 kW(10.0HP)			
				11	11.0 kW(15.0HP)			
				12	15.0 kW(20.0HP)			
				13	18.5 kW(25.0HP)			
				14	22.0 kW(30.0HP)			
				15	30.0 kW(40.0HP)			
				16	37.0 kW(50.0HP)			
				17	45.0 kW(60.0HP)			
				18	55.0 kW(75.0HP)			
				19	75.0 kW(100.0HP)			
				20	90.0 kW(125.0HP)			
				21	110.0 kW(150.0HP)			
				22	132.0 kW(220.0HP)			
				23	160.0 kW(250.0HP)			

* O: Possible to write during operation Δ: Possible to write during stop X: Ban on writing
[1] 10(V3)~11(I3)' of DRV-07 are available when Extension IO option is equipped. Refer to Extension IO option manual for more detail information.

Code	Comm. No.	Name	LCD Display	Set Range		Default		Attribute*
14	0h110E	Motor capacity	Motor Capacity	24	185.0 kW(300.0HP)	Depen dent on motor setting		Δ
				25	220.0 kW(350.0HP)			
				26	250.0 kW(400.0HP)			
				27	315.0 kW(500.0HP)			
				28	355.0 kW(550.0HP)			
				29	400.0 kW(650.0HP)			
				30	500.0 kW(800.0HP)			
15	0h110F	Torque boosting	Torque Boost	0	Manual	0: Manual		Δ
				1	Auto 1			
				2	Auto 2			
16[1]	0h1110	Forward torque boost	Fwd Boost	0.0~15.0(%)		2.0	0.75~90kW	Δ
						1.0	110~500kW	
17	0h1111	Reverse torque boost	Rev Boost	0.0~15.0(%)		2.0	0.75~90kW	Δ
						1.0	110~500kW	
18	0h1112	Base frequency	Base Freq	30.00~400.00(Hz)		60.00		Δ
19	0h1113	Start frequency	Start Freq	0.01~10.00(Hz)		0.50		Δ
20	0h1114	Maximum frequency	Max Freq	40.00~400.00(Hz)		60.00		Δ
21	0h1115	Speed unit selection	Hz/Rpm Sel	0	Hz Display	0: Hz Display		O
				1	Rpm Display			
25	0h1119	Hand mode command frequency	HAND Cmd Freq	0.00, Low Freq~High Freq		0.00		O
26	0h111A	Hand mode command frequency setting method	HAND Ref Mode	0	HAND Parameter	0 : HAND Parameter		Δ
				1	Follow AUTO			
30	0h111E	kW/HP Unit Sel	KW/HP Unit Sel	0	kW	1 : HP		O
				1	HP			
98	0h1162	I/O S/W Version display	I/O S/W Ver	-	-	-		X

* O: Possible to write during operation Δ : Possible to write during stop X: Ban on writing
[1] DRV-16~DRV-17 code appears when DRV-15 code is set as 0(Manual).

AKSA OTOMASYON

Basic Function Group (BAS)

Code	Comm. No.	Name	LCD Display	Set Range		Default	Attribute*
00	-	Jump Code	Jump Code	1~99		20	O
01	0h1201	Auxiliary command setting method	Aux Ref Src	0	None	0: None	Δ
				1	V1		
				3	V2		
				4	I2		
				6	Pulse		
				7	RS-485		
				8	FieldBus		
				10	EPID1 Output		
				11	EPID1 Fdb Val		
				12[1]	V3		
				13	I3		
02[2]	0h1202	Auxiliary command run type	Aux Calc Type	0	M+(G*A)	0: M+(G*A)	Δ
				1	Mx (G*A)		
				2	M/(G*A)		
				3	M+[M*(G*A)]		
				4	M+G*2(A-50%)		
				5	M*[G*2(A-50%)		
				6	M/[G*2(A-50%)]		
				7	M+M*G*2(A-50%)		
03	0h1203	Auxiliary command gain	Aux Ref Gain	-200.0 ~200.0(%)		100.0	O
04	0h1204	Second run command method	Cmd 2nd Src	0	Keypad	1: Fx/Rx-1	Δ
				1	Fx/Rx-1		
				2	Fx/Rx-2		
				3	RS-485		
				4	FieldBus		
				5	Time Event		
05	0h1205	Second frequency setting method	Freq 2nd Src	0	Keypad-1	0 : Keypad-1	Δ
				1	Keypad-2		
				2	V1		
				4	V2		
				5	I2		
				6	RS-485		
				7	FieldBus		
				9	Pulse		
				10[3]	V3		
				11	I3		
07	0h1207	V/F pattern	V/F Pattern	0	Linear	0: Lineal	O
				1	Square		
				2	User V/F		
				3	Square 2		
08	0h1208	Acceleration/Deceleration reference frequency	Ramp T Mode	0	Max Freq	0:MaxFreq	Δ
				1	Delta Freq		
09	0h1209	Time unit setting	Time Scale	0	0,01 sec	1: 0,1 sec	Δ
				1	0,1 sec		
				2	1 sec		
10	0h120A	Input power frequency	60/50 Hz Sel	0	60Hz	0: 60Hz	Δ
				1	50Hz		
11	0h120B	Number of motor poles	Pole Number	2~48		Varies according to the motor type	Δ
12	0h120C	Rated slip speed	Rated Slip	0-3000(Rpm)			Δ
13	0h120D	Rated current of motor	Rated Curr	1.0~1000.0(A)			Δ
14	0h120E	No-load current of motor	Noload Curr	0.0~1000.0(A)			Δ
15	0h120F	Rated voltage of motor	Rated Volt	0,170~480(V)		0	Δ
16	0h1210	Motor efficiency	Efficiency	70~100(%)		Varies according to the motor type	Δ
18	0h1212	Power display adjustment	Trim Power %	70~130(%)		100	Δ

[1] '12(V3)~13(I3)' of BAS-01 are available when Extension IO option is equipped. Refer to Extension IO option manual for more detail information
[2] BAS-02~BAS-03 code appears when BAS-01 code is not 0(None).
[3] '10(V3)~11(I3)' of BAS-05 are available when Extension IO option is equipped. Refer to Extension IO option manual for more detail information.

Basic Function Group (BAS)

Code	Comm. No.	Name	LCD Display	Set Range		Default	Attribute*
19	0h1213	Input power voltage	AC Input Volt	170~264V	0.75~18.5kW	380V	O
				320~528V	0.75~90kW		
				320~550V	110~500kW		
20	-	Automatic tuning	Auto Tuning	0	None	0: None	Δ
				1	All(rotation type)		
				2	ALL(static type)		
				3	Rs+Lsigma(rotation type)		
21	-	Stator resistance	Rs	0.000~9.999(Ω)		Varies according to the motor type	Δ
22	-	Leakage inductance	Lsigma	0.00~99.99(mH)			
41[1]	0h1229	User frequency 1	User Freq 1	0.00~Max. frequency(Hz)		15.00	Δ
42	0h122A	Uservoltage 1	User Volt 1	0~100(%)		25	Δ
43	0h122B	Userfrequency 2	User Freq 2	0.00~Max. frequency(Hz)		30.00	Δ
44	0h122C	Uservoltage 2	User Volt 2	0~100(%)		50	Δ
45	0h122D	Userfrequency 3	User Freq 3	0.00~Max. frequency(Hz)		45.00	Δ
46	0h122E	Uservoltage 3	User Volt 3	0~100(%)		75	Δ
47	0h122F	Userfrequency 4	User Freq 4	0.00~Max. frequency(Hz)		60.00	Δ
48	0h1230	Uservoltage 4	User Volt 4	0~100(%)		100	Δ
50[2]	0h1232	Multi-stepfrequency 1	Step Freq-1	0.00, Low Freq~High Freq		10.00	O
51	0h1233	Multi-stepfrequency 2	Step Freq-2	0.00, Low Freq~High Freq		20.00	O
52	0h1234	Multi-stepfrequency 3	Step Freq-3	0.00, Low Freq~High Freq		30.00	O
53	0h1235	Multi-stepfrequency 4	Step Freq-4	0.00, Low Freq~High Freq		40.00	O
54	0h1236	Multi-stepfrequency 5	Step Freq-5	0.00, Low Freq~High Freq		50.00	O
55	0h1237	Multi-stepfrequency 6	Step Freq-6	0.00, Low Freq~High Freq		60.00	O
56	0h1238	Multi-step frequency 7	Step Freq-7	0.00, Low Freq~High Freq		60.00	O
70	0h1246	Multi-step acc. time 1	Acc Time-1	0.0~600.0(sec)		20.0	O
71	0h1247	Multi-stepdec.time 1	Dec Time-1	0.0~600.0(sec)		20.0	O
72[3]	0h1248	Multi-step acc. time 2	Acc Time-2	0.0~600.0(sec)		30.0	O
73	0h1249	Multi-stepdec.time 2	Dec Time-2	0.0~600.0(sec)		30.0	O
74	0h124A	Multi-step acc. time 3	Acc Time-3	0.0~600.0(sec)		40.0	O
75	0h124B	Multi-stepdec.time 3	Dec Time-3	0.0~600.0(sec)		40.0	O
76	0h124C	Multi-step acc. time 4	Acc Time-4	0.0~600.0(sec)		50.0	O
77	0h124D	Multi-stepdec.time 4	Dec Time-4	0.0~600.0(sec)		50.0	O
78	0h124E	Multi-step acc. time 5	Acc Time-5	0.0~600.0(sec)		40.0	O
79	0h124F	Multi-stepdec.time 5	Dec Time-5	0.0~600.0(sec)		40.0	O
80	0h1250	Multi-stepacc.time 6	Acc Time-6	0.0~600.0(sec)		30.0	O
81	0h1251	Multi-stepdec.time 6	Dec Time-6	0.0~600.0(sec)		30.0	O
82	0h1252	Multi-step acc. time 7	Acc Time-7	0.0~600.0(sec)		20.0	O
83	0h1253	Multi-stepdec.time 7	Dec Time-7	0.0~600.0(sec)		20.0	O

[1] BAS-41~BAS-48 code appears when either BAS-07 or M2-25 code is set as 2(User V/F).
[2] BAS-50~BAS-56 code appears when one of IN-65~71 codes is set as Speed-L/M/H.
[3] BAS-72~83 are displayed when IN-65~71is set to 'Xcel-L/M/H'

Extended Function Group (ADV)

Code	Comm. No.	Name	LCD Display	Set Range		Default		Attribute*
00	-	Jump code	Jump Code	1~99		24		O
01	0h1301	Acceleration pattern	Acc Pattern	0	Linear	0: Linear		Δ
02	0h1302	Deceleration pattern	Dec Pattern	1	S-curve			Δ
03[1]	0h1303	S-shaped acceleration start point slope	Acc S Start	1~100(%)		40		Δ
04	0h1304	S-shaped acceleration end point slope	Acc S End	1~100(%)		40		Δ
05[2]	0h1305	S-shaped acceleration start point slope	Dec S Start	1~100(%)		40		Δ
06	0h1306	S-shaped acceleration end point slope	Dec S End	1~100(%)		40		Δ
07	0h1307	Start mode	Start Mode	0	Acc	0: Acel		Δ
				1	DC-Start			
08	0h1308	Stop mode	Stop Mode	0	Dec	0: Decel		Δ
				1	DC-Brake			
				2	Free-Run			
				4	Power Braking			
09	0h1309	Selecting direction prohibited for rotation	Run Prevent	0	None	0: None		Δ
				1	Forward Prev			
				2	Reverse Prev			
10	0h130A	Start when power is on	Power-on Run	0	No	0: No		O
				1	Yes			
11[3]	0h130B	Start delay time when power is on	Power-On Delay	0,0-6000,0(sec)		0.0		O
12[4]	0h130C	DC braking time at startup	DC-Start Time	0,0-6000,0(sec)		0.00		Δ
13	0h130D	Amount of applied DC	DC Inj Level	0~200(%)		50		Δ
14[5]	0h130E	Output blocking time	DC-Block Time	0,00-60,00(sec)		0.00	0.75~90kW	Δ
						2.00	110~500kW	Δ
15	0h130F	DC braking time	DC-Brake Time	0,00-60,00(sec)		1.00		Δ
16	0h1310	DC brake level	DC-Brake Level	0~200(%)		50		Δ
17	0h1311	DC brake frequency	DC-Brake Freq	Start frequency~60.00(Hz)		5.00		Δ
20	0h1314	Dwell frequency upon acceleration	Acc Dwell Freq	Start frequency ~Max. frequency(Hz)		5.00		Δ
21	0h1315	Dwell time upon acceleration	Acc Dwell Time	0,0-60,0(sec)		0.0		Δ
22	0h1316	Dwell frequency upon deceleration	Dec Dwell Freq	Start frequency ~Max. frequency(Hz)		5.00		Δ
23	0h1317	Dwell time upon deceleration	Dec Dwell Time	0,0-60,0(sec)		0.0		Δ
24	0h1318	Frequency limit	Freq Limit	0	No	0:No		Δ
				1	Yes			
25	0h1319	Low frequency limit	Freq Limit Lo	0.00~High frequency limit(Hz)		0.50		Δ
26	0h131A	High frequency limit	Freq Limit Hi	Low frequency limit~ Max. frequency (Hz)		Max. frequency		Δ
27	0h131B	Frequency jump	Jump Freq	0	No	0: No		Δ
				1	Yes			
28[6]	0h131C	Jump frequency: low limit 1	Jump Lo 1	0.00~ Jump frequency: high limit 1(Hz)		10.00		O
29	0h131D	Jump frequency: high limit 1	Jump Hi 1	Jump frequency: low limit 1~Max. frequency(Hz)		15.00		O
30	0h131E	Jump frequency: low limit 2	Jump Lo 2	0.00~ Jump frequency: high limit 2(Hz)		20.00		O
31	0h131F	Jump frequency: high limit 2	Jump Hi 2	Jump frequency: low limit 2~Max. frequency(Hz)		25.00		O
32	0h1320	Jump frequency: low limit 3	Jump Lo 3	0.00~ Jump frequency: high limit 3(Hz)		30.00		O
33	0h1321	Jump frequency: high limit 3	Jump Hi 3	Jump frequency: low limit 3~Max. frequency(Hz)		35.00		O
50	0h1332	Energy-saving mode	E-Save Mode	0	None	0: None		Δ
				1	Manual			
				2	Auto			
51[7]	0h1333	Energy-saving rate	Energy Save	0~30(%)		0		O
52	0h1334	Energy-saving point search time	E-Save Det T	0-100,0(sec)		20.0		Δ

[1] ADV-03~ADV-04 codes appear when ADV-01 code is set as 1(S-curve).
[2] ADV-05~ADV-06 codes appear when ADV-02 code is set as 1(S-curve).
[3] ADV-11 code appears when ADV-10 code is set as 1(Yes).
[4] ADV-12 code appears when ADV-07 code is set as 1(Dc-Start).
[5] ADV-14 code appears when ADV-08 code is set as 1(DC-Brake).
[6] ADV-28~ADV-33 codes appears when ADV-27 code is set as 1(Yes).
[7] ADV-51 is displayed when ADV-50 is set to '1 (Manual)'.
ADV-52 is displayed when ADV-50 is set to '2 (Auto)'

Extended Function Group (ADV)

Code	Comm. No.	Name	LCD Display	Set Range		Default	Attribute*
60	0h133C	Acc/Dec. time switching frequency	Xcel Change Fr	0.00~Max. frequency(Hz)		0.00	Δ
64	0h1340	Cooling fan control	Fan Control	0	During Run	0: During Run	O
				1	Always ON		
				2	Temp Control		
65	0h1341	Saving up/down run frequency	U/D Save Mode	0	No	0:No	O
				1	Yes		
66	0h1342	Output contact point on/off control	On/Off Ctrl Src	0	None	0: None	O
				1	V1		
				3	V2		
				4	I2		
				6	Pulse		
				7[1]	V3		
				8	I3		
67	0h1343	Output contact point on level	On-Ctrl Level	Output contact point off level ~ 100.00(%)		90.00	Δ
68	0h1344	Output contact point off level	Off-Ctrl Level	-100.00~Output contact point on level (%)		10.00	Δ
70	0h1346	Safe run mode or not	Run En Mode	0	Always Enable	0: Always Enable	Δ
				1	DI Dependent		
71[2]	0h1347	Safe run stop mode	Run Dis Stop	0	Free-Run	0: Free-Run	Δ
				1	Q-Stop		
				2	Q-Stop Resume		
72	0h1348	Safe run deceleration time	Q-Stop Time	0,0-600,0 (sec)		5.0	O
74	0h134A	Regeneration avoid function or not	RegenAvd Sel	0	No	0: No	Δ
				1	Yes		
75	0h134B	Regeneration avoid: working voltage level	RegenAvd Level	200V : 300~400V		350	Δ
				400V : 600~800V		700	
76[3]	0h134C	Compensation frequency limit of regeneration avoidance	CompFreq Limit	0.00~10.00Hz		1.00	Δ
77	0h134D	Regeneration avoid P gain	RegenAvd Pgain	0.0~100.0%		50.0	O
78	0h134E	Regeneration avoid I gain	RegenAvd Igain	20-30000(msec)		500	O

[1] '10(V3)~11(I3)' of ADV-66 are available when Extension IO option is equipped. Refer to Extension IO option manual for more detail information.
[2] ADV-71~ADV-72 codes appear when ADV-70 code is set as 1(DI Dependent).
[3] ADV-76–78 are displayed when ADV-74 is set to '1 (Yes)'.

AKSA OTOMASYON

Control Function Group (CON)

Code	Comm. No.	Name	LCD Display	Set Range		Default		Attribute*
00	-	Jump code	Jump Code	1~99		4		O
04	0h1404	Carrier frequency	Carrier Freq	1.0~15.0 (kHz)		3.0	0.75~90kW	O
						2.0	110~355kW	
						1.5	400~500kW	
05	0h1405	Switching mode	PWM Mode	0	Normal PWM	0: Normal PWM		Δ
				1	Lowleakage PWM			
13	0h140D	Hunting prevention function used or not	AHR Sel	0	No	1		Δ
				1	Yes			
14	0h140E	Hunting prevention Pgain	AHR P-Gain	0~32767		1000		O
15	0h140F	Hunting prevention start frequency	AHR Low Freq	0~AHR High Freq		0.5		O
16	0h1410	Hunting prevention end frequency	AHR High Freq	AHR Low Freq~400.00		400.00		O
17	0h1411	Hunting prevention compensation voltagelimit	AHR limit	0~20		2		O
21[1]	0h1415	Auto torque boost filter gain	ATB Filt Gain	1-9999(msec)		10		O
22	0h1416	Auto torque boost voltage gain	ATB Volt Gain	0.0~300.0%		100.0		O
70	0h1446	Speed search mode or not	SS Mode	0	Flying Start-1	0: Flying Start-1		Δ
				1	Flying Start-2			
71	0h1447	Speed search run or not	Speed Search	Bit	0000~1111	0000		Δ
				Bit 0	Speed search			
				Bit 1	Restart after trips (other than LV trip)			
				Bit 2	Restart after instantaneous interruption			
				Bit 3	Power-on run			
72[2]	0h1448	Speed search reference current	SS Sup-Current	50~120(%)		90	0.75~250kW	O
						80	315~500kW	
73[3]	0h1449	Speed search proportional gain	SS P-Gain	0~9999		Flying Start-1 : 100 Flying Start-2 : Varies according to the motor type		O
74	0h144A	Speed search integral gain	SS I-Gain	0~9999		Flying Start-1 : 200 Flying O Start-2 : Varies according to the motor type		
75	0h144B	Output block time before speed search	SS Block Time	0,0-60,0(sec)		1.0		Δ
77	0h144D	Energy buffering or not	KEB Select	0	No	0: No		Δ
				1	Yes			
78[4]	0h144E	Energy buffering start level	KEB Start Lev	110.0~140.0(%)		125.0	0.75~90kW	Δ
						115.0	110~500kW	
79	0h144F	Energy buffering stop level	KEB Stop Lev	125.0 ~ 145.0(%)		130.0	0.75~90kW	Δ
						125.0	110~500kW	
80	0h1450	Energy buffering slip gain	KEB Slip Gain	1~20000		300		O
81	0h1451	Energy buffering P gain	KEB P Gain	1~20000		1000		O
82	0h1452	Energy buffering I gain	KEB I Gain	1~20000		500		O
83	0h1453	Energy buffering acceleration time	KEB Acc Time	0,0-600,0(sec)		10.0	0.75~90kW	O
						30.0	110~500kW	

[1] CON-21~CON-22 codes appear when DRV-15 is set as Auto 2.
[2] CON-72 code appears when Flying Start-1is set and when any one bit of CON-71 code is set as 1.
[3] CON-73~CON-75 codes appear when any one bit of CON-71 code is set as 1.
[4] CON-78~CON-83 codes appear when CON-77 code is set as 1(Yes)

AKSA OTOMASYON

Input Terminal Group (IN)

Code	Comm. No	Name	LCD Display	Set Range		Default	Attribute*
00	-	Jump code	Jump Code	1~99		65	O
01	0h1501	Frequency upon maximuminput by analog	Freq at 100%	Start frequency ~ Max. frequency (Hz)		Max. frequency	O
05 [1]	0h1505	V1 Input level display	V1 Monitor(V)	0~12.00(V) or -12.00~12.00(V)		0.00	X
06	0h1506	V1 input polarity selection	V1 Polarity	0	Unipolar	0: Unipolar	Δ
				1	Bipolar		
07	0h1507	V1 input filter time constant	V1 Filter	0-10000(msec)		10	O
08	0h1508	V1 input minimum voltage	V1 Volt x1	0.00~10.00(V)		0.00	O
09	0h1509	Output % at V1 minimum voltage	V1 Perc y1	0.00~100.00(%)		0.00	O
10	0h150A	V1 input maximum voltage	V1 Volt x2	0.00~12.00(V)		10.00	O
11	0h150B	Output % at V1 maximum voltage	V1 Perc y2	0.00~100.00(%)		100.00	O
12 [2]	0h150C	V1 input minimum voltage	V1-Volt x1'	-10.00~0.00(V)		0.00	O
13	0h150D	Output % at V1 minimum voltage	V1-Perc y1'	-100.00~0.00(%)		0.00	O
14	0h150E	V1 input maximum voltage	V1-Volt x2'	-12.00~0.00(V)		-10.00	O
15	0h150F	Output % at V1 maximum voltage	V1-Perc y2'	-100.00~0.00(%)		-100.00	O
16	0h1510	Changing V1 rotation direction	V1 Inverting	0	No	0: No	O
				1	Yes		
17	0h1511	V1 quantizing level	V1 Quantizing	0.00 [3], 0.04~10.00(%)		0.04	O
20 [4]	0h1514	Temperature display	T1 Monitor(V)	0.00~100.00(%)		-	X
35 [5]	0h1523	V2 input display	V2 Monitor(V)	0.00~12.00(V)		0.00	O
37	0h1525	V2 input filter constant time	V2 Filter	0-10000(msec)		10	O
38	0h1526	V2 input minimum voltage	V2 Volt x1	0.00~10.00(V)		0.00	O
39	0h1527	Output % at V2 minimum voltage	V2 Perc y1	0.00~100.00(%)		0.00	O
40	0h1528	V2 input maximum voltage	V2 Volt x2	0.00~10.00(V)		10.00	O
41	0h1529	Output % at V2 maximum voltage	V2 Perc y2	0.00~100.00(%)		100.00	O
46	0h152E	Changing V2 rotation direction	V2 Inverting	0	No	0: No	O
				1	Yes		
47	0h152F	V2 quantizing level	V2 Quantizing	0.00 [6], 0.04~10.00(%)		0.04	O
50 [7]	0h1532	I2 input display	I2 Monitor(mA)	0~24(mA)		0	O
52	0h1534	I2 input filter constant time	I2 Filter	0-10000(msec)		10	O
53	0h1535	I2 input minimum current	I2 Curr x1	0.00~20.00(mA)		4.00	O
54	0h1536	Output % at I2 minimum current	I2 Perc y1	0.00~100.00(%)		0.00	O
55	0h1537	I2 input maximum current	I2 Curr x2	0.00~24.00(mA)		20.00	O
56	0h1538	Output % at I2 maximum current	I2 Perc y2	0.00~100.00(%)		100.00	O
61	0h153D	Changing I2 rotation direction	I2 Inverting	0	No	0: No	O
				1	Yes		
62	0h153E	I2 quantizing level	I2 Quantizing	0.00 [8], 0.04~10.00(%)		0.04	O
65	0h1541	P1 terminal function setting	P1 Define	0	None	1: Fx	Δ
				1	Fx		
66	0h1542	P2 terminal function setting	P2 Define	2	Rx	2: Rx	Δ
67	0h1543	P3 terminal function setting	P3 Define	3	RST	5: BX	Δ
68	0h1544	P4 terminal function setting	P4 Define	4	Disparo externo	3: RST	Δ
69	0h1545	P5 terminal function setting	P5 Define	5	BX	7: Sp-L	Δ
70	0h1546	P6 terminal function setting	P6 Define	6	JOG	8: Sp-M	Δ
71	0h1547	P7 terminal function setting	P7 Define	7	Speed-L	9: Sp-H	Δ
				8	Speed-M		
				9	Speed-H		
				11	XCEL-L		
				12	XCEL-M		
				13	XCEL-H		
				14	XCEL Stop		
				15	RUN Enable		
				16	3-Wire		
				17	2nd Source		
				18	Exchange		

[1] IN-05' setting range can be changed according to the 'IN-06' settings. [2] IN-12~IN-17codes appear whenIN-06 code is set as 1(Bipolar).
[3] When set as 0,Quantizing is not available. [4] IN-20 code appears when analog voltage/current input terminal setting switch (SW3) is set as T1.
[5] IN-35~IN47 codes appear when analog voltage/current input terminal setting switch (SW4) is set as V2
[6] When set as 0,Quantizing is not available.
[7] IN-50~IN-62 codes appear when analog voltage/current input terminal setting switch (SW5) is set as I2
[8] When set as 0, Quantizing is not available.

AKSA OTOMASYON

Code	Comm. No.	Name	LCD Display	Set Range		Default	Attribute*
71	0h1547	P7 terminal function setting	P7 Define	19	Up	9:Sp-H	Δ
				20	Down		
				22	U/D Clear		
				23	Analog Hold		
				24	I-Term Clear		
				25	PID Openloop		
				26	PID Gain2		
				27	PID Ref Change		
				28	2nd Motor		
				29	Interlock 1		
				30	Interlock 2		
				31	Interlock 3		
				32	Interlock 4		
				33	Interlock 5		
				34	Pre Excite		
				35	Timer In		
				37	dis Aux Ref		
				38	FWD JOG		
				39	REV JOG		
				40	Fire Mode		
				41	EPID1 Run		
				42	EPID1 ItermClr		
				43	Time Event En		
				44	Pre Heat		
				45	Damper Open		
				46	PumpClean		
				47	EPID2 Run		
				48	EPID2 ItermClr		
				49	Sleep Wake Chg		
				50	PID Step Ref L		
				51	PID Step Ref M		
				52	PID Step Ref H		
				53 [1]	Interlock6		
				54	Interlock7		
				55	Interlock8		
83	0h1553	DI On Delay Selection	DI On DelayEn	000 0000 ~ 111 1111		111 1111	Δ
84	0h1554	DI Off Delay Selection	DI Off DelayEn	000 0000 ~ 111 1111		111 1111	Δ
85	0h1555	Multifunction input terminal on filter	DI On Delay	0-10000(msec)		10	O
86	0h1556	Multifunction input terminal off filter	DI Off Delay	0-10000(msec)		3	O
87	0h1557	Multifunction input contact point selection	DI NC/NO Sel	P7-P1		000 0000	Δ
				0	A Contact Point(NO)		
				1	B Contact Point(NC)		
89	0h1559	Multi-step command delay time	InCheck Time	1-5000(msec)		1	Δ
90	0h155A	Multifunction input terminal status	DI Status	P7-P1		000 0000	O
				0	Open (Off)		
				1	Access (On)		
91	0h155B	Pulse input display	Pulse Monitor(kHz)	0.00~50.00(kHz)		0.00	X
92	0h155C	TI input filter constant time	TI Filter	0-9999(msec)		10	O
93	0h155D	TI input minimum pulse	TI Pls x1	0~TI Pls x2		0.00	O
94	0h153E	Output % at TI minimum pulse	TI Perc y1	0.00~100.00(%)		0.00	O
95	0h155F	TI input maximum pulse	TI Pls x2	0,00-32,00(kHz)		32.00	O
96	0h1560	Output % at TI maximum pulse	TI Perc y2	0~100(%)		100.00	O
97	0h1561	Changing TI rotation direction	TI Inverting	0	No	0: No	O
				1	Yes		
98	0h1562	TI quantizing level	TI Quantizing	0.00 [2],0.04~10.00(%)		0.04	O

[1] 53(Interlock6)~55(Interlock8)' of IN-65~71 are available when Extension IO option is equipped. Refer to Extension IO option manual for more detail information

[2] Quantizing is disabled if '0' is selected.

Output Terminal Block Function Group (OUT)

Code	Comm. No	Name	LCD Display	Set Range		Default	Attribute*
00	-	Jump code	JumpCode	1~99		30	O
01	0h1601	Analog output 1 item	AO1 Mode	0	Frequency	0: Frequency	O
				1	Output Current		
				2	Output Voltage		
				3	DCLink Voltage		
				4	Output Power		
				7	Target Freq		
				8	Ramp Freq		
				9	PID Ref Value		
				10	PID Fdb Value		
				11	PID Output		
				12	Constant		
				13	EPID1 Output		
				14	EPID1 RefVal		
				15	EPID1 FdbVal		
				16	EPID2 Output		
				17	EPID2 RefVal		
				18	EPID2 FdbVal		
02	0h1602	Analog output 1 gain	AO1 Gain	-1000.0~1000.0(%)		100.0	O
03	0h1603	Analog output 1 bias	AO1 Bias	-100.0~100.0(%)		0.0	O
04	0h1604	Analog output 1 filter	AO1 Filter	0-10000(msec)		5	O
05	0h1605	Analog constant output 1	AO1 Const %	0.0~100.0(%)		0.0	O
06	0h1606	Analog output 1 monitor	AO1 Monitor	0.0~1000.0(%)		0.0	X
07	0h1607	Analog output 2 item	AO2 Mode	Same as the selection range of OUT-02 AO1 Mode		0: Frequency	O
08	0h1608	Analog output 2 gain	AO2 Gain	-1000.0~1000.0(%)		100.0	O
09	0h1609	Analog output 2 bias	AO2 Bias	-100.0~100.0(%)		0.0	O
10	0h160A	Analog output 2 filter	AO2 Filter	0-10000(msec)		5	O
11	0h160B	Analog constant output 2	AO2 Const %	0.0~100.0(%)		0.0	O
12	0h160C	Analog output 2 monitor	AO2 Monitor	0.0~1000.0(%)		0.0	X
30	0h161E	Trip output item	Trip Out Mode	Bit	000~111	010	O
				Bit 0	Low voltage trip generated		
				Bit 1	Trip other than low voltage trip		
				Bit 2	Final failure of auto restart		
31	0h161F	Multifunction relay 1 item	Relay 1	0	None	23 : Trip	O
				1	FDT-1		
				2	FDT-2		
				3	FDT-3		
				4	FDT-4		
				5	Over Load		
				6	IOL		
				7	Under Load		
				8	Fan Warning		
				9	Stall		
				10	Over Voltage		
				11	Low Voltage		
				12	Over Heat		
				13	Lost Command		
				14	Run		
				15	Stop		
				16	Steady		
				17	Drive Line		
				18	Comm Line		
				19	Speed Search		
				20	Ready		

AKSA OTOMASYON

Code	Comm. No	Name	LCD Display	Set Range		Default	Attribute*
31	0h161F	Multifunction relay 1 item	Relay 1	21	MMC	23:Trip	O
				22	Timer Out		
				23	Trip		
				24	Lost Keypad		
				25	DB Warn%ED		
				26	On/Off Control		
				27	Fire Mode		
				28	Pipe Broken		
				29	Damper Err		
				30	Lubrication		
				31	Pump Clean		
				32	Level Detect		
				33	Damper Control		
				34	CAP.Warning		
				35	Fan Exchange		
32	0h1620	Multifunction relay 2 item	Relay 2	36	AUTO State	14:RUN	O
33	0h1621	Multifunction relay 3 item	Relay 3	37	Hand State	0: None	O
34	0h1622	Multifunction relay 4 item	Relay 4	38	TO	0: None	O
35	0h1623	Multifunction relay 5 item	Relay 5	39	Except Date	0: None	O
36	0h1621	Multifunction output 1 item	Q1 Define	40	KEB Operating	0: None	O
				41	BrokenBelt		
41	0h1629	Multifunction output monitor	DO Status	DO Status		000000	X
50	0h1632	Multifunction output ON delay	DO On Delay	0.00~100.00(sec)		0.00	O
51	0h1633	Multifunction output OFF delay	DO Off Delay	0.00~100.00(sec)		0.00	O
52	0h1634	Multifunction output, Multifunction relay Contact point selection	DO NC/NO Sel	Q1, Relay5~Relay1		000000	Δ
				0	A Contact Point (NO)		
				1	B Contact Point (NC)		
53	0h1635	Trip output ON delay	TripOut OnDly	0,00-100,00(sec)		0.00	O
54	0h1636	Trip output OFF delay	TripOut OffDly	0,00-100,00(sec)		0.00	O
55	0h1637	Timer ON delay	TimerOn Delay	0,00-100,00(sec)		0.00	O
56	0h1638	Timer OFF delay	TimerOff Delay	0,00-100,00(sec)		0.00	O
57	0h1639	Detection frequency	FDT Frequency	0.00~Max. frequency (Hz)		30.00	O
58	0h163A	Detection frequency bandwidth	FDT Band	0.00~Max. frequency (Hz)		10.00	O
61	0h163D	Pulse output item	TO Mode	0	Frequency	0: Frequency	O
				1	Output Current		
				2	Output Voltage		
				3	DCLink Voltage		
				4	Output Power		
				7	Target Freq		
				8	Ramp Freq		
				9	PID Ref Value		
				10	PID Fdb Value		
				11	PID Output		
				12	Constant		
				13	EPID1 Output		
				14	EPID1 RefVal		
				15	EPID1 FdbVal		
				16	EPID2 Output		
				17	EPID2 RefVal		
				18	EPID2 FdbVal		
62	0h163E	Pulse output gain	TO Gain	-1000.0~1000.0(%)		100.0	O
63	0h163F	Pulse output bias	TO Bias	-100.0~100.0(%)		0.0	O
64	0h1640	Pulse output filter	TO Filter	0-10000(msec)		5	O
65	0h1641	Pulse output constant output 2	TO Const %	0.0~100.0(%)		0.0	O
66	0h1642	Pulse output monitor	TO Monitor	0.0~1000.0(%)		0.0	O

Communication Function Group (COM)

Code	Comm. No	Name	LCD Display	Set Range		Default	Attribute*
00	-	Jump code	Jump Code	1~99		20	O
01	0h1701	Built-in communication drive ID	Int485 St ID	1~250		1	O
02	0h1702	Built-in communication protocol	Int485 Proto	0	ModBus RTU	0: ModBus RTU	O
				2	LS Inv 485		
				4	BACnet RTU		
				5	Metasys-N2		
03	0h1703	Built-in communication speed	Int485 BaudR	0	1200 bps	3: 9600 bps	O
				1	2400 bps		
				2	4800 bps		
				3	9600 bps		
				4	19200 bps		
				5	38400 bps		
				6	56 Kbps		
				7	76.8Kbps		
				8	115.2 Kbps [1]		
04	0h1704	Built-in communication frame setting	Int485 Mode	0	D8/PN/S1	0: D8/PN/S 1	O
				1	D8/PN/S2		
				2	D8/PE/S1		
				3	D8/PO/S1		
05	0h1705	Send delay after receiving	Resp Delay	0-1000(msec)		5	O
06 [2]	0h1706	Communication option S/W version	FBus S/W Ver	-		-	O
07	0h1707	Communication option drive ID	FBus ID	0~255		1	O
08	0h1708	Field bus communication speed	FBUS BaudRate	-		12Mbps	O
09	0h1709	Communication option LED status	FieldBus LED	-		-	O
20	0h1714	BACnet maximum master count	BAC Max Master	1~127		127	O
21	0h1715	BACnet device number 1	BAC Dev Inst1	0~4194		237	O
22	0h1716	BACnet device number 2	BAC Dev Inst2	0~999		0	O
23	0h1717	BACnet password	BAC PassWord	0~32767		0	O
28	0h171C	USB protocol	USB Protocol	0	Modbus RTU	2: LS Inv 485	O
				2	LS Inv 485		
30	0h171E	Output parameter count	ParaStatus Num	0~8		3	O
31	0h171F	Output communication no. 1	Para Stauts-1	0000~FFFF Hex		000A	O
32	0h1720	Output communication no. 2	Para Stauts-2	0000~FFFF Hex		000E	O
33	0h1721	Output communication no. 3	Para Stauts-3	0000~FFFF Hex		000F	O
34	0h1722	Output communication no. 4	Para Stauts-4	0000~FFFF Hex		0000	O
35	0h1723	Output communication no. 5	Para Stauts-5	0000~FFFF Hex		0000	O
36	0h1724	Output communication no. 6	Para Stauts-6	0000~FFFF Hex		0000	O
37	0h1725	Output communication no. 7	Para Stauts-7	0000~FFFF Hex		0000	O
38	0h1726	Output communication no. 8	Para Stauts-8	0000~FFFF Hex		0000	O
50	0h1732	Input parameter count	Para Ctrl Num	0~8		2	O
51	0h1733	Input communication no. 1	Para Control-1	0000~FFFF Hex		0005	O
52	0h1734	Input communication no. 2	Para Control-2	0000~FFFF Hex		0006	O
53	0h1735	Input communication no. 3	Para Control-3	0000~FFFF Hex		0000	O
54	0h1736	Input communication no. 4	Para Control-4	0000~FFFF Hex		0000	O
55	0h1737	Input communication no. 5	Para Control-5	0000~FFFF Hex		0000	O
56	0h1738	Input communication no. 6	Para Control-6	0000~FFFF Hex		0000	O
57	0h1739	Input communication no. 7	Para Control-7	0000~FFFF Hex		0000	O
58	0h173A	Input communication no. 8	Para Control-8	0000~FFFF Hex		0000	O

[1] 115,200 bps
[2] COM-06–09 are displayed only when a communication option card is installed. Please refer to the communication option manual for details.

AKSA OTOMASYON

Code	Comm. No	Name	LCD Display	Set Range		Default	Attribute*
70	0h1746	Communication multifunction input 1	Virtual DI 1	0	None	0: None	O
71	0h1747	Communication multifunction input 2	Virtual DI 2	1	Fx	0: None	O
72	0h1748	Communication multifunction input 3	Virtual DI 3	2	Rx	0: None	O
73	0h1749	Communication multifunction input 4	Virtual DI 4	3	RST	0: None	O
74	0h174A	Communication multifunction input 5	Virtual DI 5	4	External Trip	0: None	O
75	0h174B	Communication multifunction input 6	Virtual DI 6	5	BX	0: None	O
76	0h174C	Communication multifunction input 7	Virtual DI 7	6	JOG	0: None	O
77	0h174D	Communication multifunction input 8	Virtual DI 8	7	Speed-L	0: None	O
				8	Speed-M		
				9	Speed-H		
				11	XCEL-L		
				12	XCEL-M		
				13	XCEL-H		
				14	XCEL-Stop		
				15	Run Enable		
				16	3-wire		
				17	2nd source		
				18	Exchange		
				19	Up		
				20	Down		
				22	U/D Clear		
				23	Analog Hold		
				24	I-Term Clear		
				25	PID Openloop		
				26	PID Grain 2		
				27	PID Ref Change		
				28	2nd Motor		
				29	Interlock1		
				30	Interlock2		
				31	Interlock3		
				32	Interlock4		
				33	Interlock5		
				34	Pre Excite		
				35	Timer In		
				37	Dis Aux Ref		
				38	FWD JOG		
				39	REV JOG		
				40	Fire Mode		
				41	EPID1 Run		
				42	EPID1 ItermClr		
				43	Time Event En		
				44	Pre Heat		
				45	Damper Open		
				46	Pump Clean		
				47	EPID2 Run		
				48	EPID2 ItermClr		
				49	Sleep Wake Chg		
				50	PID Step Ref L		
				51	PID Step Ref M		
				52	PID Step Ref H		
				53[1]	Interlock6		
				54	Interlock7		
				55	Interlock8		
86	0h1756	Communication multifunction input monitor	Virt DI Status	-		0	Δ
96	0h173C	Communica tion operation auto resume	PowerOn Resume	0	No	0 : No	Δ

[1] '53 (Interlock6)~55(Interlock8)' of COM-70~77 are available when Extension IO option is equipped. Refer to Extension IO option manual for more detail information.

Application Function Group (PID)

Code	Comm. No	Name	LCD Display	Set Range		Default	Attribute*
00	-	Jump code	Jump Code	1~99		50	O
01	0h1801	PID function selection	PID Sel	0	No	0: No	Δ
				1	Yes		
02	0h1802	E-PID selection	E-PID Sel	0	No	0: No	O
				1	Yes		
03	0h1803	PID output monitor	PID Output	-		-	X
04	0h1804	PID reference monitor	PID Ref Value	-		-	X
05	0h1805	PID feedback monitor	PID Fdb Value	-		-	X
06	0h1806	PID error monitor value	PID Err Value	-		-	X
10	0h180A	PID reference 1 source selection	PID Ref 1 Src	0	KeyPad	0: Keypad	Δ
				1	V1		
				3	V2		
				4	I2		
				5	Int 485		
				6	Fieldbus		
				8	Pulse		
				9	EPID1 Output		
				10[1]	V3		
				11	I3		
11	0h180B	PID reference 1 keypad value	PID Ref 1 Set	Unit Min~Unit Max		Unit Default	O
12	0h180C	PID reference 1 auxiliary source selection	PID Ref1AuxSrc	0	None	0: None	Δ
				1	V1		
				3	V2		
				4	I2		
				6	Pulse		
				7	Int 485		
				8	FieldBus		
				10	EPID1 Output		
				11	E-PID Fdb Val		
				12[2]	V3		
				13	I3		
13	0h180D	PID reference 1 auxiliary mode selection	PID Ref1AuxMod	0	M/(G*A)	0: M+(G* A)	O
				1	M+(M*(G*A))		
				2	M+G*2*(A-50)		
				3	M*(G*2*(A-50))		
				4	M/(G*2*(A-50))		
				5	M+M*G*2*(A-50)		
				6	M/(G*2*(A-50))		
				7	M+M*G*2*(A-50)		
				8	(M-A)^2		
				9	M^2+A^2		
				10	MAX(M, A)		
				11	MIN(M, A)		
				12	(M + A)/2		
				13	Root(M+A)		
14	0h180E	PID reference 1 auxiliary gain	PID Ref1 Aux G	-200.0~200.0(%)		0.0	O
15	0h180F	PID reference 2 source selection	PID Ref 2 Src	0	Keypad	0: KeyPad	Δ
				1	V1		
				3	V2		
				4	I2		
				5	Int 485		
				6	Fieldbus		
				8	Pulse		
				9	E-PID Output		
				10[3]	V3		
				11	I3		
16	0h1810	PID reference 2 keypad value	PID Ref 2 Set	Unit Min~Unit Max		Unit Default	O
17	0h1811	PID reference 2 auxiliary sourceselection	PID Ref2AuxSrc	0	None	0: None	Δ
				1	V1		

[1] '10(V3)~11(I3)' of PID-10 are available when Extension IO option is equipped. Refer to Extension IO option manual for more detail information.
[2] '12(V3)~13(I3)' of PID-12 are available when Extension IO option is equipped. Refer to Extension IO option manual for more detail information.
[3] '10(V3)~11(I3)' of PID-15 are available when Extension IO option is equipped. Refer to Extension IO option manual for more detail information.

AKSA OTOMASYON

Code	Comm. No	Name	LCD Display	Set Range		Default	Attribute*
17	0h1811	PID reference 2 auxiliary sourceselection	PID Ref2AuxSrc	3	V2	0: None	O
				4	I2		
				6	Pulse		
				7	RS-485		
				8	FieldBus		
				10	EPID1 Output		
				11	EPID1 Fdb Val		
				12[1]	V3		
				13	I3		
18	0h1812	PID reference 2 auxiliary mode selection	PID Ref2AuxMod	0	M+(G*A)	0: M+(G*A)	O
				1	M*(G*A)		
				2	M/(G*A)		
				3	M+(M*(G*A))		
				4	M+G*2*(A-50)		
				5	M*(G*2*(A-50))		
				6	M/(G*2*(A-50))		
				7	M+M*G*2*(A-50)		
				8	(M-A)^2		
				9	M^2+A^2		
				10	MAX(M, A)		
				11	MIN(M, A)		
				12	(M+A)/2		
				13	Root(M+A)		
19	0h1813	PID reference 2 auxiliary gain	PID Ref2 Aux G	-200.0~200.0(%)		0.0	O
20	0h1814	PID feedback selection	PID Fdb Source	0	V1	0: V1	Δ
				2	V2		
				3	I2		
				4	Int 485		
				5	FieldBus		
				7	Pulse		
				8	EPID1 Output		
				9	EPID1 Fdb Val		
				10[2]	V3		
				11	I3		
21	0h1815	PID feedback auxiliary source selection	1 PID Fdb Aux Src	0	None	0: None	Δ
				1	V1		
				3	V2		
				4	I2		
				6	Pulse		
				7	Int 485		
				8	FieldBus		
				10	EPID1 Output		
				11	EPID1 Fdb Val		
				12[3]	V3		
				13	I3		
22	0h1816	PID feedback auxiliary mode selection	PID Fdb AuxMod	0	M+(G*A)	0: M+(G*A)	O
				1	M*(G*A)		
				2	M/(G*A)		
				3	M+(M*(G*A))		
				4	M+G*2*(A-50)		
				5	M*(G*2*(A-50))		
				6	M/(G*2*(A-50))		
				7	M+M*G*2*(A-50)		
				8	(M-A)^2		
				9	M^2+A^2		
				10	MAX(M, A)		
				11	MIN(M, A)		
				12	(M+A)/2		
				13	Root(M+A)		

[1] '12(V3)~13(I3)' of PID-17 are available when Extension IO option is equipped. Refer to Extension IO option manual for more detail information.
[2] '10(V3)~11(I3)' of PID-20 are available when Extension IO option is equipped. Refer to Extension IO option manual for more detail information.
[3] '12(V3)~13(I3)' of PID-21 are available when Extension IO option is equipped. Refer to Extension IO option manual for more detail information.

Application Function Group (PID)

Code	Comm. No	Name	LCD Display	Set Range		Default	Attribute*
23	0h1817	PID feedback auxiliary gain	PID Fdb Aux G	-200.0~200.0(%)		0.0	O
24	0h1818	PID feedback band	PID Fdb Band	0~Unit Band		0.00	O
25	0h1819	PID controller P-Gain 1	PID P-Gain 1	0.00~300.00(%)		50.00	O
26	0h181A	PID controller I-Time 1	PID I-Time 1	0,0-200,0(sec)		10.0	O
27	0h181B	PID controller D-Time 1	PID D-Time 1	0,00-1,00(sec)		0.00	O
28	0h181C	PID controller feedforward compensation gain	PID FFGain	0.0~1000.0(%)		0.0	O
29	0h181D	PID output filter	PID Out LPF	0.00~10.00(s)		0.00	O
30	0h181E	PID output high limit	PID Limit Hi	PID Limit Lo~100.00		100.00	O
31	0h181F	PID output low limit	PID Limit Lo	-100,00-Límite Alto PID		0.00	O
32	0h1820	PID controller P-Gain 2	PID P-Gain 2	0.00~300.00(%)		50.0	O
33	0h1821	PID controller I-Time 2	PID I-Time 2	0,0-200,0(sec)		10.0	O
34	0h1822	PID controller D-Time 2	PID D-Time 2	0,00-1,00(sec)		0.00	O
35	0h1823	PID output mode	PID Out Mode	0	PID Output	0: Salida PID	O
				1	PID+Main Freq		
				2	PID+EPID1 Out		
				3	PID+EPID1+Main		
36	0h1824	PID output inversion	PID Out Inv	0	No	0: No	Δ
				1	Yes		
37	0h1825	PID output scale	PID Out Scale	0.1~1000.0(%)		100.0	Δ
40	0h1828	PID multi-step reference value 1	PID Step Ref 1	Unit Min~Unit Max		Unit Default	O
41	0h1829	PID multi-step reference value 2	PID Step Ref 2	Unit Min~Unit Max		Unit Default	O
42	0h182A	PID multi-step reference value 3	PID Step Ref 3	Unit Min~Unit Max		Unit Default	O
43	0h182B	PID multi-step reference value 4	PID Step Ref 4	Unit Min~Unit Max		Unit Default	O
44	0h182C	PID multi-step reference value 5	PID Step Ref 5	Unit Min~Unit Max		Unit Default	O
45	0h182D	PID multi-step reference value 6	PID Step Ref 6	Unit Min~Unit Max		Unit Default	O
46	0h182E	PID multi-step reference value 7	PID Step Ref 7	Unit Min~Unit Max		Unit Default	O
50	0h1832	PID controller unit selection	PID Unit Sel	Refer to Unit List		1: %	O
				0	CUST		
				1	%		
				2	PSI		
				3	°F		
				4	°C		
				5	inWC		
				6	inM		
				7	mBar		
				8	Bar		
				9	Pa		
				10	kPa		
				11	Hz		
				12	rpm		
				13	V		
				14	A		
				15	kW		
				16	HP		
				17	mpm		
				18	ft		
				19	m/s		
				20	m3/s (m3/Sec)		
				21	m3/m(m3/min)		
				22	m3/h (m3/Hora)		
				23	l/s		
				24	l/m		
				25	l/h		
				26	kg/s		
				27	kg/m		
				28	kg/h		
				29	gl/s		

AKSA OTOMASYON

Code	Comm. No	Name	LCD Display	Set Range		Default	Attribute*
50	0h1832	PID controller unit selection	PID Unit Sel	30	gl/m	1: %	O
				31	gl/h		
				32	ft/s		
				33	f3/s (ft3/Sec)		
				34	f3/m (ft3/Min)		
				35	f3/h (ft3/Hour)		
				36	lb/s		
				37	lb/m		
				38	lb/h		
				39	ppm		
				40	pps		
51	0h1833	PID unit scale	PID Unit Scale	0	x100	2: x 1	O
				1	x10		
				2	x1		
				3	x0.1		
				4	x0.01		
52	0h1834	PID control 0% set value	PID Unit 0%	X100	-30000~Unit Max	Rangevaries accordingto PID50setting	O
				X10	-3000.0~Unit Max		
				X1	-300.00~Unit Max		
				X0.1	-30.000~Unit Max		
				X0.01	-3.0000~Unit Max		
53	0h1835	PID control 100% set value	PID Unit 100%	X100	Unit Min~30000	Rangevaries accordingto PID50setting	O
				X10	Unit Min~3000.0		
				X1	Unit Min~300.00		
				X0.1	Unit Min~30.000		
				X0.01	Unit Min~3.0000		

EPID Function Group (EPID) [1]

Code	Comm. No	Name	LCD Display	Set Range		Default	Attribute*
00	-	Jump code	Jump Code	1~99		1	O
01	0h1901	EPID1 Mode selection	EPID1 Mode	0	None	0: None	O
				1	Always ON		
				2	During Run		
				3	DI dependent		
02 [2]	0h1902	EPID1 output monitor value	EPID1 Output	-100.00~100.00%		0.00	X
03	0h1903	EPID1 reference monitor value	EPID1 Ref Val	-		-	X
04	0h1904	EPID1 feedback monitor value	EPID1 Fdb Val	-		-	X
05	0h1905	EPID1 error monitor value	EPID1 Err Val	-		-	X
06	0h1906	EPID1 command source selection	EPID1 Ref Src	0	Keypad	0: KeyPad	Δ
				1	V1		
				3	V2		
				4	I2		
				5	Int 485		
				6	FieldBus		
				8	Pulse		
				9 [3]	V3		
				10	I3		
07	0h1907	EPID1 keypad command value	EPID1 Ref Set	Unit Min~Unit Max		Unit Min	O
08	0h1908	EPID1 feedback source selection	EPID1 Fdb Src	0	V1	0: V1	O
				2	V2		
				3	I2		
				4	Int485		
				5	FieldBus		
				7	Pulse		
				8 [4]	V3		
				9	I3		
09	0h1909	EPID1 P-Gain	EPID1 P-Gain	0.00~300.00(%)		50.00	O
10	0h190A	EPID1 I-Time	EPID1 I-Time	0.0-200,0(sec)		10.0	O
11	0h190B	EPID1 D-Time	EPID1 D-Time	0,00-1,00(sec)		0.00	O
12	0h190C	EPID1 feedforward compensation gain	EPID1 FF-Gain	0.0~1000.0 (%)		0.0	O
13	0h190D	EPID1 output filter	EPID1 Out LPF	0,00-10,00(sec)		0.00	O
14	0h190E	EPID1 output high limit	EPID1 Limit Hi	EPID1 Limit Lo ~100.00		100.00	O
15	0h190F	EPID1 output low limit	EPID1 Limit Lo	-100.00-Lím Alto EPID2		0.00	O
16	0h1910	EPID1 output inversion	EPID1 Out Inv	0	No	0: No	O
				1	Yes		
17	0h1911	EPID1 unit	EPID1 Unit Sel	Refer to the EPID Unit table		1: %	O
18	0h1912	EPID1 unit scale	EPID1 Unit Scl	0	X100	2: X1	O
				1	X10		
				2	X1		
				3	X0.1		
				4	X0.01		
19	0h1913	EPID1 unit 0%	EPID1 Unit0%	X100	-30000~Unit Max	Varies according to unit setting	O
				X10	-3000.0~Unit Max		
				X1	-300.00~Unit Max		
				X0.1	-30.000~Unit Max		
				X0.01	-3.0000~Unit Max		
20	0h1914	EPID1 unit 100%	EPID1 Unit100%	X100	Unit Min~30000	Varies according to unit setting	O
				X10	Unit Min~3000.0		
				X1	Unit Min~300.00		
				X0.1	Unit Min~30.000		
				X0.01	Unit Min~3.0000		

[1] EPID Group is displayed when PID-02 code is set to 'Yes'.
[2] EPID-02~EPID-20 codes appear when EPID-01 code is not 0(None).
[3] '9(V3)~10(I3)' of EPID-06 are available when Extension IO option is equipped. Refer to Extension IO option manual for more detail information.
[4] '8(V3)~9(I3)' of EPID-08 are available when Extension IO option is equipped. Refer to Extension IO option manual for more detail information.

AKSA OTOMASYON

Code	Comm. No	Name	LCD Display	Set Range		Default	Attribute*
31	0h191F	EPID2 Mode selection	EPID2 Mode	0	None	0: None	O
				1	Always ON		
				2	During Run		
				3	DI dependent		
32[1]	0h1920	EPID2 output monitor value	EPID2 Output	-100.00~100.00%		0.00	X
33	0h1921	EPID2 reference monitor value	EPID2 Ref Val	-		-	X
34	0h1922	EPID2 feedback monitor value	EPID2 Fdb Val	-		-	X
35	0h1923	EPID2 error monitor value	EPID2 Err Val	-		-	X
36	0h1924	EPID2 command source selection	EPID2 Ref Src	0	Keypad	0: KeyPad	Δ
				1	V1		
				2	I1		
				3	V2		
				4	I2		
				5	RS-485		
				6	FieldBus		
				8	Pulse		
				9	V3		
				10[2]	I3		
37	0h1925	EPID2 keypad command value	EPID2 Ref Set	Unit Min~Unit Max		Unit Min	O
38	0h1926	EPID2 feedback source selection	EPID2 Fdb Src	0	V1		
				2	V2		
				3	I2		
				4	RS-485		
				5	FieldBus	0: V1	O
				7	Pulse		
				8	V3		
				9[3]	I3		
39	0h1927	EPID2 P-Gain	EPID2 P-Gain	0.0~300.0 (%)		50.0	O
40	0h1928	EPID2 I-Time	EPID2 I-Time	0.0-200,0(sec)		10.0	O
41	0h1929	EPID2 D-Time	EPID2 D-Time	0,00-1,00(sec)		0.00	O
42	0h192A	EPID2 feedforward compensation gain	EPID2 FF-Gain	0.0~1000.0 (%)		0.0	O
43	0h192B	EPID2 output filter	EPID2 Out LPF	0,00-10,00(sec)		0.00	O
44	0h192C	EPID2 output high limit	EPID2 Limit Hi	EPID2 Limit Lo~100.00		100.00	O
45	0h192D	EPID2 output low limit	EPID2 Limit Lo	-100.00~EPID2 Limit Hi		0.00	O
46	0h192E	EPID2 output inversion	EPID2 Out Inv	0	No	0: No	O
				1	Yes		
47	0h192F	EPID2 unit	EPID2 Unit Sel	Refer to the EPID Unit table		0: CUST	O
48	0h1930	EPID2 unit scale	EPID2 Unit Scl	0	X100	2: X1	O
				1	X10		
				2	X1		
				3	X0.1		
				4	X0.01		
49	0h1931	EPID2 unit 0%	EPID2 Unit0%	X100	-30000~Unit Max	Varies according to unit setting	O
				X10	-3000.0~Unit Max		
				X1	-300.00~Unit Max		
				X0.1	-30.000~Unit Max		
				X0.01	-3.0000~Unit Max		
50	0h1932	EPID2 unit 100%	EPID2 Unit100%	X100	Unit Min~30000	Varies according to unit setting	O
				X10	Unit Min~3000.0		
				X1	Unit Min~300.00		
				X0.1	Unit Min~30.000		
				X0.01	Unit Min~3.0000		

[1] EPID-32~EPID-50 codes appear when EPID-31 code is not 0(None).
[2] '9(V3)~10(I3)' of EPID-36 are available when Extension IO option is equipped. Refer to Extension IO option manual for more detail information.
[3] '8(V3)~9(I3)' of EPID-38 are available when Extension IO option is equipped. Refer to Extension IO option manual for more detail information

Application 1 Function Group

Code	Comm. No.	Name	LCD Display	Set Range		Default	Attribute*
00	-	Jump code	Jump Code	1~99		20	O
05	0h1A05	Sleep boost level	Sleep Bst Set	0.00~Unit Max		0.00	O
06	0h1A06	Sleep boost speed	Sleep Bst Freq	0.00, Low Freq~High Freq		60.00	O
07	0h1A07	PID sleep mode 1 delay time	PID Sleep 1 DT	0.0~6000.0(sec)		20.0	O
08	0h1A08	PID sleep mode 1 frequency	PID Sleep1Freq	0.00, Low Freq~High Freq		0.00	O
09	0h1A09	PID wakeup 1 delay time	PID WakeUp1 DT	0.0~6000.0(sec)		20.0	O
10	0h1A0A	PID wakeup 1 value	PID WakeUp1Dev	0.00~Unit Band		20.00	O
11	0h1A0B	PID sleep mode 2 delay time	PID Sleep 2 DT	0.0~6000.0(sec)		20.0	O
12	0h1A0C	PID sleep mode 2 frequency	PID Sleep2Freq	0.00, Low Freq~High Freq		0.00	O
13	0h1A0D	PID wakeup 2 delay time	PID WakeUp2 DT	0.0~6000.0(sec)		20.0	O
14	0h1A0E	PID wakeup 2 value	PID WakeUp2Dev	0.00~Unit Band		20.00	O
20	0h1A14	Soft Fill function used or not	Soft Fill Sel	0	No	0 : No	O
				1	Yes		
21	0h1A15	Pre-PID run frequency	Pre-PID Freq	Low Freq~High Freq		30.00	O
22	0h1A16	Pre-PID holding time	Pre-PID Delay	0.0~600.0(sec)		60.0	O
23	0h1A17	Soft Fill exit value	Soft Fill Set	Unit Min~Unit Max		20.00	O
24	0h1A18	Soft Fill reference increase level	Fill Step Set	0.00~Unit Band		2.00	O
25	0h1A19	Soft Fill reference increase cycle	Fill Step Time	0~9999(sec)		20	O
26	0h1A1A	Soft Fill difference	Fill Fdb Diff	0.00~Unit Band		0.00	O
30	0h1A1E	Flow Comp function used or not	Flow Comp Sel	0	No	0 : No	O
				1	Yes		
31	0h1A1F	Max Comp value	Max Comp Value	0.00~Unit Band		0.00	O
40[1]	0h1A28	MMC function selection	MMC Sel	0	None	0 : No	Δ
				1	Single Ctrl		
				2	Multi Follower		
				3	Multi Master		
				4	Serve Drv		
41[2]	0h1A29	Bypass selection	Regul Bypass	0	No	0 : No	Δ
				1	Yes		
42	0h1A2A	Selecting number of auxiliary motors	Num of Aux	1~5		5	Δ
43	0h1A2B	Selecting starting auxiliary motors	Starting Aux	1~5		1	Δ
44	0h1A2C	Display number of running auxiliary motors	Aux Motor Run	-		-	X
45	0h1A2D	Display priority of 1~4 auxiliary motor	Aux Priority 1	-		-	X
46	0h1A2E	Display priority of 5~8 auxiliary motor	Aux Priority 2	-		-	X
48	0h1A30	Setting auxiliary motor operation when stopped	Aux All Stop	0	No	1: Yes	O
				1	Yes		
49	0h1A31	Sequence of auxiliary motor stop	FIFO/FILO	0	FILO	0: FILO	Δ
				1	FIFO		
50	0h1A32	Aux. motor operating pressure difference	Actual Pr Diff	0~100(%)		2	O
51	0h1A33	Main motor acceleration time when the number of aux. motors decreases	Aux Acc Time	0.0~600.0(sec)		2.0	O
52	0h1A34	Main motor deceleration time when the number of aux.motors increase	Aux Dec Time	0.0~600.0(sec)		2.0	O
53	0h1A35	Aux. motor start delay time	Aux Start DT	0.0~3600.0(sec)		60.0	O
54	0h1A36	Aux. motor stop delay time	Aux Stop DT	0.0~3600.0(sec)		60.0	O
55	0h1A37	Auto change mode selection	Auto Ch Mode	0	None	1: AUX Exchange	Δ
				1	AUX Exchange		
				2	Main Exchange		
56	0h1A38	Auto change time	Auto Ch Time	00:00~99:00		72:00	O
57	0h1A39	Auto change frequency	Auto Ch Level	Low Freq~High Freq		20.00	O
58	0h1A3A	Auto change operation time	Auto Op Time	-		-	X
61	0h1A3D	First auxiliary motor start frequency	Start Freq 1	Low Freq~High Freq		45.00	O
62	0h1A3E	Second auxiliary motor start frequency	Start Freq 2	Low Freq~High Freq		45.00	O
63	0h1A3F	Third auxiliary motor start frequency	Start Freq 3	Low Freq~High Freq		45.00	O
64	0h1A40	Fourth auxiliary motor start frequency	Start Freq 4	Low Freq~High Freq		45.00	O
65	0h1A41	Fifth auxiliary motor start frequency	Start Freq 5	Low Freq~High Freq		45.00	O
70	0h1A46	First auxiliary motor stop frequency	Stop Freq 1	Low Freq~High Freq		20.00	O
71	0h1A47	Second auxiliary motor stop frequency	Stop Freq 2	Low Freq~High Freq		20.00	O
72	0h1A48	Third auxiliary motor stop frequency	Stop Freq 3	Low Freq~High Freq		20.00	O
73	0h1A49	Fourth auxiliary motor stop frequency	Stop Freq 4	Low Freq~High Freq		20.00	O
74	0h1A4A	Fifth auxiliary motor stop frequency	Stop Freq 5	Low Freq~High Freq		20.00	O

[1] Set PID-1 to 'YES' to configure AP1-40.
[2] Set AP1-40 to 'YES' to configure AP1-41

AKSA OTOMASYON

Code	Comm. No.	Name	LCD Display	Set Range		Default	Attribute*
80	0h1A50	Reference compensation of first aux. motor	Aux1 Ref Comp	0.00~Unit Band		0.00	O
81	0h1A51	Reference compensation of second aux. motor	Aux2 Ref Comp	0.00~Unit Band		0.00	O
82	0h1A52	Reference compensation of third aux. motor	Aux3 Ref Comp	0.00~Unit Band		0.00	O
83	0h1A53	Reference compensation of fourth aux. motor	Aux4 Ref Comp	0.00~Unit Band		0.00	O
84	0h1A54	Reference compensation of fifth aux. motor	Aux5 Ref Comp	0.00~Unit Band		0.00	O
90	0h1A5A	Interlock selection	Interlock	0	No	0: No	O
				1	Yes		
91	0h1A5B	Delay time before running the next main motor when interlock/auto change occurs at the main motor	Interlock DT	0.1~360.0(Sec)		5.0	O
95[1]	0h1A5F	Selection of Auxiliary motor to display [AP1-96] [AP1-97]	AuxRunTime Sel	0: Aux 1		0: Aux 1	O
				1: Aux 2			
				2: Aux 3			
				3: Aux 4			
				4: Aux 5			
96	0h1A60	Operation time(Day) of Auxiliary motor selected in [AP1-95]	AuxRunTime Day	0 ~ 65535		0	O
97	0h1A61	Operation time of Auxiliary motor selected in [AP1-95] (Hour:Minute)	AuxRunTime Min	00:00 ~ 23:59		00:00	O
98	0h1A62	Deleting operation time of Auxiliary motor	AuxRunTime Clr	0	None	0: None	O
				1	All		
				2	Aux 1		
				3	Aux 2		
				4	Aux 3		
				5	Aux 4		
				6	Aux 5		

[1] AP1-95~98 is available when MMC and Master Follower functions are performed.

Application 2 Function Group

Code	Comm. No.	Name	LCD Display	Set Range		Default	Attribute*
00	-	Jump code	Jump Code	1~99		40	O
01[1]	0h1B01	Load curve tuning	Load Tune	0	No	No	Δ
				1	Yes		
02	0h1B02	Load curve: Low Freq	Load Fit Lfreq	Base Freq*15%~Load Fit HFreq		30.00	Δ
03	0h1B03	Current at Low Freq	Load Fit LCurr	0.0~80.0(%)		40.0	Δ
04	0h1B04	Power at Low Freq	Load Fit LPwr	0.0~80.0(%)		30.0	Δ
08	0h1B08	Load curve: High Freq	Load Fit Hfreq	Load Fit LFreq~High Freq		51.00	Δ
09	0h1B09	Current at High Freq	Load Fit HCurr	Load Fit HCurr~200.0(%)		80.0	Δ
10	0h1B0A	Power at High Freq	Load Fit HPwr	Load Fit HPwr~200.0(%)		80.0	Δ
11	0h1B0B	Load curve current	Load Curve Cur	-		-	X
12	0h1B0C	Load curve power	Load Curve Pwr	-		-	X
15	0h1B0F	Pump Clean Setting 1	Pump Clean Mode1	0	None	0: None	O
				1	DI Defendant		
				2	Output Power		
				3	Output Current		
16	0h1B10	Pump Clean Setting 2	Pump Clean Mode2	0	None	0: None	Δ
				1	Start		
				2	Stop		
				3	Start&Stop		
17	0h1B11	Pump clean load setting	PC Curve Rate	0.1~200.0(%)		100.0	O
18	0h1B12	Pump clean reference band	PC Curve Band	0.0~100.0(%)		5.0	O
19	0h1B13	Pump clean operation delay time	PC Curve DT	0.0~6000.0(sec)		60.0	O
20	0h1B14	Pump clean available area holding time	PC Start DT	0.0~6000.0(sec)		10.0	O
21	0h1B15	0operationtimewhenforward/reverseswitching	PC Step DT	0.1~6000.0(sec)		5.0	O
22	0h1B16	Pump clean acceleration time	PC Acc Time	0.0~600.0(sec)		10.0	O
23	0h1B17	Pump clean deceleration time	PC Dec Time	0.0~600.0(sec)		10.0	O
24	0h1B18	Forward step steady time	Fwd SteadyTime	0.0~600.0(sec)		10.0	O
25	0h1B19	Forward step steady frequency	Fwd SteadyFreq	0.00, Low Freq~High Freq		30.00	O
26	0h1B1A	Reverse step steady time	Rev SteadyTime	0.0~600.0(sec)		10.0	O
27	0h1B1B	Reverse step steady frequency	Rev SteadyFreq	0.00, Low Freq~High Freq		30.00	O
28	0h1B1C	Number of forward/ reverse steps during pump cleaning	PC Num of Steps	1~10		2	O
29	0h1B1D	Pump clean cycle monitoring	Repeat Num Mon	-		-	X
30	0h1B1E	Number of repeated pump cleaning	Repeat Num Set	0~10		2	O

[1] Set the operation mode to AUTO to configure AP2-01

Application 2 Function Group

Code	Comm. No.	Name	LCD Display	Set Range		Default	Attribute*
31	0h1B1F	Operation after pump clean completion	PC End Mode	0	Stop	0.Stop	Δ
				1	Run		
32	0h1B20	Continuous Pump Clean limit time	PC Limit Time	6~60(min)		10	O
33	0h1B21	Continuous Pump Clean limit number	PC Limit Num	0~10		3	O
38	0h1B26	Dec Valve operation frequency	Dec Valve Freq	Low Freq~High Freq		40.00	O
39	0h1B27	Dev Valve deceleration time	Dev Valve Time	0.0~6000.0(sec)		0.0	O
40	0h1B28	Start & End Ramp selection	Start&End Ramp	0	No	0 : No	Δ
				1	Yes		
41	0h1B29	Start Ramp acceleration time	Start Ramp Acc	0.0~600.0(sec)		10.0	O
42	0h1B2A	End Ramp deceleration time	End Ramp Dec	0.0~600.0(sec)		10.0	O
45	0h1B2D	Damper check time	Damper DT	0.0~600.0(sec)		5.0	O
46	0h1B2E	Lubrication operation time	Lub Op Time	0.0~600.0(sec)		5.0	O
48[1]	0h1B30	Preheat level	Pre Heat Level	1~100(%)		20	O
49	0h1B31	Preheat duty ratio	Pre Heat Duty	1~100(%)		30	O
50	0h1B32	DC input delay time	DC Inj Delay T	0.0~600.0(sec)		60.0	O
87	0h1B57	1st MOTOR average POWER	M1 AVG PWR	0.1~500.0(kW)		-	O
88	0h1B58	2nd MOTOR average POWER	M2 AVG PWR	0.1~500.0(kW)		-	O
89	0h1B59	Cost per kWh	Cost per kWh	0.0~1000.0		0.0	O
90	0h1B5A	kWh energy saved	Saved kWh	-		0.0	X
91	0h1B5B	MWh energy saved	Saved MWh	-		0	X
92	0h1B5C	Saved cost up to 1000 unit	Saved Cost1	-		0.0	X
93	0h1B5D	Saved cost up to 1000 unit	Saved Cost2	-		0	X
94	0h1B5E	Reduced CO2 conversion Factor	CO2 Factor	0.0~5.0		0.0	O
95	0h1B5F	CO2 reduction (unit: Ton)	Saved CO2 -1	-		0.0	X
96	0h1B60	CO2 reduction (unit: kT on)	Saved CO2 -2	-		0	X
97	0h1B61	Reset of energy saved	Reset Energy	0	No	0.No	Δ
				1	Yes		

[1] AP2-48~AP2-49 codes appear when one of IN-65~71 codes is set as Pre-Heat.

Application 3 Function Group

Code	Comm. No.	Name	LCD Display	Set Range		Default	Attribute*
00	-	Jump code	Jump Code	1~99		70	O
01	0h1C01	Current date	Now Date	01/01/2000~12/31/2099(Date)		01/01/2000	O
02	0h1C02	Current time	Now Time	0:00~23:59(Min)		0:00	O
03	0h1C03	Current weekday	Now Weekday	0000000~1111111(Bit)		0000001	O
04	0h1C04	Summer Time start date	Summer T Start	01/01~Summer T Stop		04/01	O
05	0h1C05	Summer Time end date	Summer T Stop	Summer T Start~12/31(Date)		11/31	O
06[1]	0h1C06	Date format	Date Format	0	YYYY/MM/DD	Date Format	O
				1	MM/DD/YYYY		
				2	DD/MM/YYYY		
10	0h1C0A	Period connection status	Period Status	-		-	X
11	0h1C0B	Time Period 1 start time setting	Period1 Start T	00:00~24:00		24:00	O
12	0h1C0C	Time Period 1 stop time setting	Period1 Stop T	Period1 StartT~24:00(Min)		24:00	O
13	0h1C0D	Time Period 1 day setting	Period1 Day	0000000~1111111(Bit)		0000000	
14	0h1C0E	Time Period 2 start time setting	Period2 Start T	00:00~24:00(Min)		24:00	O
15	0h1C0F	Time Period 2 stop time setting	Period2 Stop T	Period2 StartT~24:00(Min)		24:00	O
16	0h1C10	Time Period 2 day setting	Period2 Day	0000000~1111111(Bit)		00000000	O
17	0h1C11	Time Period 3 start time setting	Period3 Start T	00:00~24:00(Min)		24:00	O
18	0h1C12	Time Period 3 stop time setting	Period3 Stop T	Period3 StartT~24:00(Min)		24:00	O
19	0h1C13	Time Period 3 day setting	Period3 Day	0000000~1111111(Bit)		0000000	O
20	0h1C14	Time Period 4 start time setting	Period4 StartT	00:00~24:00(Min)		24:00	O
21	0h1C15	Time Period 4 stop time setting	Period4 Stop T	Period4 StartT~24:00(Min)		24:00	O
22	0h1C16	Time Period 4 day setting	Period4 Day	0000000~1111111(Bit)		0000000	O
30	0h1C1E	Except1 Date start time setting	Except1 Start T	00:00~24:00(Min)		24:00	O
31	0h1C1F	Except1 Date stop time setting	Except1 Stop T	Except1 StartT~24:00(Min)		24:00	O
32	0h1C20	Except1 Date setting	Except1Date	01/01~12/31(Date)		01/01	O
33	0h1C21	Except2 Date start time setting	Except2 Start T	00:00~24:00(Min)		24:00	O
34	0h1C22	Except2 Date stop time setting	Except2 Stop T	Except2 StartT~24:00(Min)		24:00	O
35	0h1C23	Except2 Date setting	Except2Date	01/01~12/31(Date)		01/01	O
36	0h1C24	Except3 Date start time setting	Except3 StartT	00:00~24:00(Min)		24:00	O
37	0h1C25	Except3 Date stop time setting	Except3 Stop T	Except3 StartT~24:00(Min)		24:00	O
38	0h1C26	Except3Date setting	Except3Date	01/01~12/31(Date)		01/01	O
39	0h1C27	Except4 Date start time setting	Except4 Start T	00:00~24:00(Min)		24:00	O
40	0h1C28	Except4 Date stop time setting	Except4 Stop T	Except4 StartT~24:00(Min)		24:00	O
41	0h1C29	Except4Date setting	Except4Date	01/01~12/31(Date)		01/01	O
42	0h1C2A	Except5 Date start time setting	Except5 Start T	00:00~24:00(Min)		24:00	O
43	0h1C2B	Except5 Date stop time setting	Except5 Stop T	Except5 StartT~24:00(Min)		24:00	O
44	0h1C2C	Except5 Date setting	Except5 Date	01/01~12/31(Date)		01/01	O
45	0h1C2D	Except6 Date start time setting	Except6 Start T	00:00~24:00(Min)		24:00	O
46	0h1C2E	Except6 Date stop time setting	Except6 Stop T	Except6 StartT~24:00(Min)		24:00	O
47	0h1C2F	Except6 Date setting	Except6 Date	01/01~12/31(Date)		01/01	O
48	0h1C30	Except7 Date start time setting	Except7 StartT	00:00~24:00(Min)		24:00	O
49	0h1C31	Except7 Date stop time setting	Except7 Stop T	Except7 StartT~24:00(Min)		24:00	O
50	0h1C32	Except7 Date setting	Except7 Date	01/01~12/31(Date)		01/01	O
51	0h1C33	Except8 Date start time setting	Except8 Start T	00:00~24:00(Min)		24:00	O
52	0h1C34	Except8 Date stop time setting	Except8 Stop T	Except8 StartT~24:00(Min)		24:00	O
53	0h1C35	Except8 Date setting	Except8 Date	01/01~12/31(Date)		01/01	O

[1] The date format can be changed according to the AP3-06 settings.

Code	Comm. No.	Name	LCD Display	Set Range		Default	Attribute*
70	0h1C46	Time Event function setting	Time Event En	0	No	0 : NO	Δ
				1	Yes		
71	0h1C47	Time Event setting status	T-Event Status	-		-	X
72	0h1C48	Time Event 1 connection setting	T-Event1Period	000000000000~111111111111		000000000000	Δ
73	0h1C49	Time Event 1 selection	T-Event1Define	0	None	0: None	Δ
				1	Fx		
				2	Rx		
				3	Speed-L		
				4	Speed-M		
				5	Speed-H		
				7	Xcel-L		
				8	Xcel-M		
				9	Xcel-H		
				10	Xcel Stop		
				11	Run Enable		
				12	2nd Source		
				13	Exchange		
				14	Analog Hold		
				15	I-Term Clear		
				16	PID Openloop		
				17	PID Gain 2		
				18	PID Ref Change		
				19	2nd Motor		
				20	Timer In		
				21	Dias Aux Ref		
				22	EPID1 Run		
				23	EPID1 ITermClr		
				24	Pre Heat		
				25	EPID2 RUn		
				26	EPID2 ITerm Clr		
				27	PID Gain 2		
				28	PID Ref Change		
				29	PID Step Ref M		
				30	PID Step Ref H		
74	0h1C4A	Time Event 2 connection setting	T-Event2Period	000000000000~111111111111		000000000000	Δ
75	0h1C4B	Time Event 2 selection	T-Event2Define	Same as the AP3-73 setting range		0: None	Δ
76	0h1C4C	Time Event 3 connection setting	T-Event2Period	000000000000~111111111111		000000000000	Δ
77	0h1C4D	Time Event 3 selection	T-Event3Define	Same as the AP3-73 setting range		0: None	Δ
78	0h1C4E	Time Event 4 connection setting	T-Event4Period	000000000000~111111111111		000000000000	Δ
79	0h1C4F	Time Event 4 selection	T-Event4Define	Same as the AP3-73 setting range		0: None	Δ
80	0h1C50	Time Event 5 connection setting	T-Event5Period	000000000000~111111111111		000000000000	Δ
81	0h1C51	Time Event 5 selection	T-Event5Define	Same as the AP3-73 setting range		0: None	Δ
82	0h1C52	Time Event 6 connection setting	T-Event6Period	000000000000~111111111111		000000000000	Δ
83	0h1C53	Time Event 6 selection	T-Event6Define	Same as the AP3-73 setting range		0: None	Δ
84	0h1C54	Time Event 7 connection setting	T-Event7Period	000000000000~111111111111		000000000000	Δ
85	0h1C55	Time Event 7 selection	T-Event7Define	Same as the AP3-73 setting range		0: None	Δ
86	0h1C56	Time Event 8 connection setting	T-Event8Period	000000000000~111111111111		000000000000	Δ
87	0h1C57	Time Event 8 selection	T-Event8Define	Same as the AP3-73 setting range		0: None	Δ

AKSA OTOMASYON

Protective Function Group (PRT)

Code	Comm. No.	Name	LCD Display	Set Range		Default		Attribute*
00	-	Jump code	Jump Code	1~99		40		O
05	0h1D05	I/O open phase protection	Phase Loss Chk	Bit	00~11	00		Δ
				Bit 0	Fault trips other than LV trip			
				Bit 1	LV trip			
06	0h1D06	Input open phase voltage band	IPO V Band	1~100(V)		15		O
07	0h1D07	Trip deceleration time	Trip Dec Time	0.0~600.0(sec)		3.0	0.75~90kW	O
						90.0	110~500kW	
08	0h1D08	Start upon trip reset	RST Restart	Bit	00~11	00		O
				Bit 0	Fault trips other than LV trip			
				Bit 1	LV trip			
09	0h1D09	Auto retry number	Retry Number	0~10		0		O
10	0h1D0A	Auto retry delay time	Retry Delay	0.0~600.0(sec)		5.0		O
11	0h1D0B	Operation when keypad command islost	Lost KPD Mode	0	None	0: None		O
				1	Warning			
				2	Free-Run			
				3	Dec			
12	0h1D0C	Operation when speed command is lost	Lost Cmd Mode	0	None	0: None		O
				1	Free-Run			
				2	Dec			
				3	Hold Input			
				4	Hold Output			
				5	Lost Preset			
13[1]	0h1D0D	Time to decide lost speed command	Lost Cmd Time	0.1~120.0(sec)		1.0		O
14	0h1D0E	Operation frequency when speed commandis lost	Lost Preset F	0.00, Low Freq~High Freq		0.00		O
15	0h1D0F	Level to decide lost analog input	AI Lost Level	0	Half ofx1	0: Half of x1		O
				1	Below x 1			
17	0h1D11	Overload warning selection	OL Warn Select	0	No	0: No		O
				1	Yes			
18	0h1D12	Overload warning level	OL Warn Level	30~OL Trip Level(%)		110		O
19	0h1D13	Overload warning time	OL Warn Time	0.0~30.0(sec)		10.0		O
20	0h1D14	Operation at overload trip	OL Trip Select	0	None	1: Free-Run		O
				1	Free-Run			
				2	Dec			
21	0h1D15	Overload trip level	OL Trip Level	30~150(%)		120		O
22	0h1D16	Overload trip time	OL Trip Time	0.0~60.0(sec)		60.0		O
23	0h1D17	Under-load warning source selection	UL Source	0	Output Current	0: Output Current		Δ
				1	Output Power			
24	0h1D18	Under-load warning detection band	UL Band	0.0~100.0(%)		10.0		Δ
25	0h1D19	Under-load warning selection	UL Warn Sel	0	No	0: No		O
				1	Yes			
26	0h1D1A	Under-load warning time	UL Warn Time	0.0~600.0(sec)		10.0		O
27	0h1D1B	Under-load trip selection	UL Trip Sel	0	None	0: None		O
				1	Free-Run			
				2	Dec			
28	0h1D1C	Under-load trip time	UL Trip Time	0.0~600.0(sec)		30.0		O
31	0h1D1F	Operation at No Motor trip	No Motor Trip	0	None	0: None		O
				1	Free-Run			
32	0h1D20	No Motor trip	No Motor Level	1~100(%)		5		O
33	0h1D21	No Motor detection time	No Motor Time	0.1~10.0(sec)		3.0		O
34	0h1D22	Operation after detection by overheat motor sensor	Thermal-T Sel	0	None	0 : None		O
				1	Free-Run			
				2	Dec			
35	0h1D23	Overheat motor sensor input selection	Thermal In Src	0	Thermal In	0: Thermal In		O
				1	V2			
36	0h1D24	Overheat motor sensor failure level	Thermal-T Lev	0.0~100.0(%)		50.0		O

[1] PRT-13~PRT-15 codes appear when PRT-12 code is not set as 0: None.

Protective Function Group (PRT)

Code	Comm. No.	Name	LCD Display	Set Range		Default	Att ribute*
37	0h1D25	Overheat motor sensor failure area	Thermal-T	0	Low	0: Low	O
				1	High		
38[52]	0h1D26	Overheat motor detection sensor	ThermalMonitor	-		-	X
40	0h1D28	Overheat motor trip selection	ETH Trip Sel	0	None	0: None	O
				1	Free-Run		
				2	Dec		
41	0h1D29	Motor cooling fan type	Motor Cooling	0	Self-cool	0: Selfcool	O
				1	Forced-cool		
42	0h1D2A	Overheat prevention: 1 min. rating	ETH 1min	ETH Cont~150(%)		120	O
43	0h1D2B	Overheat prevention: continuous rating	ETH Cont	50~120(%)		100	O
44	0h1D2C	Fire Mode setting password	Fire Mode PW	0~9999		0	O
45[1]	0h1D2D	Fire Mode setting	Fire Mode Sel	0	None	0: None	O
				1	Fire Mode		
				2	Test Mode		
46[2]	0h1D2E	Fire Mode direction setting	Fire Mode Dir	0	Reverse	1: Forward	O
				1	Forward		
47[3]	0h1D2F	Fire Mode speed setting	Fire Mode Freq	0~max Freq		60.00	O
48	0h1D30	Fire Mode operation count	Fire Mode Cnt	-		0	X
50	0h1D32	Stall prevention & flux breaking	Stall Prevent	Bit	0000~1111	0100	Δ
				Bit 0	가속 중		
				Bit 1	정속 중		
				Bit 2	감속 중		
				Bit 3	Fux Braking		
51	0h1D33	Stall frequency 1	Stall Freq 1	Start frequency ~Stall frequency 2(Hz)		60.00	O
52	0h1D34	Stall level 1	Stall Level 1	30~150(%)		130	Δ
53	0h1D35	Stall frequency 2	Stall Freq 2	Start frequency 1 ~Stall frequency 3(Hz)		60.00	O
54	0h1D36	Stall level 2	Stall Level 2	30~150(%)		130	Δ
55	0h1D37	Stall frequency 3	Stall Freq 3	Start frequency2 ~Stall frequency 4(Hz)		60.00	O
56	0h1D38	Stall level 3	Stall Level 3	30~150(%)		130	Δ
57	0h1D39	Stall frequency 4	Stall Freq 4	Stall frequency 3~Max. frequency (Hz)		60.00	O
58	0h1D3A	Stall level 4	Stall Level 4	30~150(%)		130	Δ
59	0h1D3B	Flux Braking voltage gain	Flux Brake Kp	5.5~90kW	0~150(%)	0	O
				110~500kW	0~10(%)		
60	0h1D3C	Pipe broken detection setting	PipeBroken Sel	0	None	0: None	O
				1	Warning		
				2	Free-Run		
				3	Dec		
61	0h1D3D	Pipe broken detection level	PipeBroken Lev	0~100.0(%)		97.5	O
62	0h1D3E	Pipe broken detection time setting	PipeBroken DT	0.0~6000.0(Sec)		10.0	O
66	0h1D42	Damping resistance use rate	DB Warn %ED	0~30(%)		0	O
70	0h1D46	Level detection mode selection	LDT Sel	0	None	0 : None	O
				1	Warning		
				2	Free-Run		
				3	Dec		
71	0h1D47	Setting level detection mode	LDT Area Sel	0	Below Level	0: Below Level	O
				1	Above Level		
72	0h1D48	Level detection source	LDT Source	0	Output Current	0: Output Current	O
				1	DC Link Voltage		
				2	Output Voltage		
				3	kW		
				4	HP		
				5	V1		
				6	V2		
				7	I2		
				8	PID Ref Value		
				9	PID Fdb Value		
				10	PID Output		
				11	EPID1 Fdb Val		
				12	EPID2 Fdb Val		

[1] PRT-38 code appears when PRT-34 code is not 0: None.
[2] PRT-45 can only be set when PRT-44 is in Fire mode. To change the mode in PRT-44, create a new password for PRT-44.
[3] PRT-46–47 are displayed when PRT-45 is not set to '0 (NONE)'.
[4] When Fire mode is set at PRT-45, PRT-46 is automatically set to forward, and the frequency set at PRT-47 cannot be edited. When PRT-45 is set to Test mode, PRT-46 and PRT-47 settings are editable.

AKSA OTOMASYON

Code	Comm. No.	Name	LCD Display	Set Range		Default	Attribute*
73	0h1D49	evel detection delay time	LDT Dly Time	0~9999(sec)		2	O
74	0h1D4A	Level detection reference value	LDT Level	Setting per source		Setting per source	O
75	0h1D4B	Level detection bandwidth	LDT Band width	Setting per source		Setting per source	O
76	0h1D4C	Level detection frequency	LDT Freq	0.00~High Freq(Hz)		20.00	O
77	0h1D4D	Level detection trip restart	LDT Restart DT	0.0~3000.0		60.0	
79	0h1D4F	Cooling fan failure selection	FAN Trip Mode	0	Trip	0: Trip	O
				1	Warning		
80	0h1D50	Operation upon option trip	Opt Trip Mode	0	None	1: Free-Run	O
				1	Free-Run		
				2	Dec		
81	0h1D51	Low voltage delay time	LVT Delay	0.0~60.0(sec)		0.0	Δ
82	0h1D52	Selection of low voltage during operation	LV2 Trip Sel	0	No	1: No	Δ
				1	Yes		
83	0h1D53	CAP. life diagnosis current level	CAP. Diag Perc	10~100(%)		0	O
84[1]	-	CAP. life diagnosis mode	CAP. Diag	0	None	0: None	Δ
				1	Cap.Diag 1		
				2	Cap.Diag 2		
				3	Cap.Init		
85	0h1D55	CAP. life diagnosis level 1	CAP. Level1	50.0~95.0(%)		0.0	Δ
86[2]	0h1D56	CAP. life diagnosis level 2	CAP. Level2	-		0.0	X
87	0h1D57	Fan use accumulation %	Fan Time Perc	-		0	X
88	0h1D58	Fan exchange warning level	Fan Exchange	0.0~100.0(%)		0.0	O
90	0h1D5A	Battery low voltage selection	Low Battery	0	None	0: None	O
				1	Warning		
91	0h1D5B	Setting the function of Broken belt	Broken Belt Sel	0	None	0: None	Δ
				1	Warning		
				2	Free-Run		
92	0h1D5C	Operating the frequency of Broken belt	Broken Belt Freq	15.00~MaxFreq		15.00	Δ
93	0h1D5D	Motor torque current	Current Trq	-		-	X
94	0h1D5E	Torque current of operating Broken belt	Broken Belt Trq	0.0~100.0(%)		10.0	Δ
95	0h1D5F	Delay of operating Broken belt	Broken Belt Dly	0~600.0(sec)		10.0	Δ

[1] PRT-84 is displayed when PRT-83 is set to more than '0(%)'. PRT- 84 can only be set in Auto-State.
[2] PRT-86 is read only.

Motor 2 (2nd Motor) Function Group (M2)[1]

Code	Comm. No.	Name	LCD Display	Set Range		Default		Attribute*
00	-	Jump Code	Jump Code	1~99		14		O
04	0h1E04	Acceleration time	M2-Acc Time	20.0	0.75~90kW	-		O
				60.0	110~250kW			
				100.0	315~500kW			
05	0h1E05	Deceleration time	M2-Dec Time	30.0	0.75~90kW	-		O
				90.0	110~250kW			
				150.0	315~500kW			
06	0h1E06	Motor capacity	M2-Capacity	7	3.7 kW(5.0HP)	-		Δ
				8	4.0 kW(5.5HP)			
				9	5.5 kW(7.5HP)			
				10	7.5 kW(10.0HP)			
				11	11.0 kW(15.0HP)			
				12	15.0 kW(20.0HP)			
				13	18.5 kW(25.0HP)			
				14	22.0 kW(30.0HP)			
				15	30.0 kW(40.0HP)			
				16	37.0 kW(50.0HP)			
				17	45.0 kW(60.0HP)			
				18	55.0 kW(75.0HP)			
				19	75.0 kW(100.0HP)			
				20	90.0 kW(125.0HP)			
				21	110.0 kW(150.0HP)			
				22	132.0 kW(200.0HP)			
				23	160.0 kW(250.0HP)			
				24	185.0 kW(300.0HP)			
				25	220.0 kW(350.0HP)			
				26	250.0 kW(400.0HP)			
				27	315.0 kW(500.0HP)			
				28	355.0 kW(550.0HP)			
				29	400.0 kW(650.0HP)			
				30	500.0 kW(800.0HP)			
07	0h1E07	Base frequency	M2-Base Freq	30.00~400.00(Hz)		60.00		Δ
08	0h1E08	Control mode	M2-Ctrl Mode	0	V/F	0:V/F		Δ
				2	Slip Compen			
10	0h1E0A	Number of motor poles	M2-Pole Num	2~48		Varies according to the motor type		Δ
11	0h1E0B	Rated slip speed	M2-Rated Slip	0~3000(Rpm)				
12	0h1E0C	Motor: rated current	M2-Rated Curr	1.0~1000.0(A)				
13	0h1E0D	Motor: no load current	M2-Noload Curr	0.0~1000.0(A)				
14	0h1E0E	Motor: rated voltage	M2-Rated Volt	0[2], 170~480(V)				
15	0h1E0F	Motor efficiency	M2-Efficiency	70~100(%)				
17	-	Stator resistance	M2-Rs	0.000~9.999(Ω)				
18	0h1E12	Leakage inductance	M2-Lsigma	0.00~99.99(mH)				
25	0h1E19	V/F pattern	M2-V/F Patt	0	Linear	0: Linear		Δ
				1	Square			
				2	User V/F			
26	0h1E1A	Forward torque boost	M2-Fwd Boost	0.0~15.0(%)		2.0	0.75~90kW	Δ
				0.0~15.0(%)		1.0	110~500kW	
27	0h1E1B	Reverse torque boost	M2-Rev Boost	0.0~15.0(%)		2.0	0.75~90kW	Δ
				0.0~15.0(%)		1.0	110~500kW	
28	0h1E1C	Stall prevention level	M2-Stall Lev	30~150(%)		130		Δ
29	0h1E1D	Overheat prevention: 1 min rating	M2-ETH 1min	100~150(%)		120		Δ
30	0h1C1E	Overheat prevention: continuous rating	M2-ETH Cont	50~120(%)		100		Δ

[1] Motor 2 Function Group appears when one ofl N-65~71 codes is set as 26(2nd MOTOR).
[2] Refer to the 4.15-motor output voltage adjustment

AKSA OTOMASYON

Trip & Configuration Mode

TripMode(TRPLast-x)

Code	Name	LCD Display	Set Range		Default	Reference
00	Fault (Failure) type display	Trip Name(x)	-		-	-
01	Operation frequency under failure	Output Freq	-		-	-
02	Output current under failure	Output Current	-		-	-
03	Acceleration/Deceleration status under failure	Inverter State	-		-	-
04	DC part voltage	DCLink Voltage	-		-	-
05	NTC temperature	Temperature	-		-	-
06	Input terminal block status	DI State	-		0000 0000	-
07	Output terminal block status	DO State	-		000	-
08	Failure time after power input	Trip On Time	-		00/00/00 00:00	-
09	Failure time after operation start	Trip Run Time	-		00/00/00 00:00	-
10	Deletion of failure history	Trip Delete?	0	No	-	
			1	Yes		

Configuration (Config.) Mode (CNF)

Code	Name	LCD Display	Set Range		Default	Reference
00	Jump code	Jump Code	1~99		42	
01	Keypad language selection	Language Sel	0 : English		0 : English	
02	LCD contrast adjustment	LCD Contrast	-		-	
10	Drive S/W version	Inv S/W Ver	-		-	
11	LCD loader S/W version	KeypadS/W Ver	-		-	
12	LCD loader title version	KPD Title Ver	-		-	
20	Status window display items	Anytime Para	0	Frequency	0: Frequency	
21	Monitor mode display	Monitor Line-1	1	Speed	0: Frequency	
22	Monitor mode display item 2	Monitor Line-2	2	Output Current	2: Output Current	
23	Monitor mode display item 3	Monitor Line-3	3	Output Voltage	3: Output Voltage	
			4	Output Power		
			5	WHour Counter		
			6	DCLink Voltage		
			7	DI State		
			8	DO State		
			9	V1 Monitor(V)		
			10	V1 Monitor(%)		
			13	V2 Monitor(V)		
			14	V2 Monitor(%)		
			15	I2 Monitor(mA)		
			16	I2 Monitor(%)		
			17	PID Output		
			18	PID Ref Value		
			19	PID Fdb Value		
			20	EPID1 Out		
			21	EPID1 Ref Val		
			22	EPID1 Fdb Val		
			23	EPID2 Out		
			24	EPID2 Ref Val		
			25	EPID2 Fdb Val		
24	Monitor mode initialization	Mon Mode Init	0	No	0: No	
			1	Yes		
30[1]	Option slot 1 type	Option-1 Type	-	-	-	
31[1]	Option slot 2 type	Option-2 Type	-	-	-	
32[1]	Option slot 3 type	Option-3 Type	-	-	-	
40	Parameter initialization	Parameter Init	0	No	0: No	
			1	All Grp		
			2	DRV Grp		
			3	BAS Grp		
			4	ADV Grp		

[1] For details,refer to option manual.

Code	Name	LCD Display	Set Range		Default	Reference
40	Parameter initialization	Parameter Init	5	CON Grp	0: No	
			6	IN Grp		
			7	OUT Grp		
			8	COM Grp		
			9	PID Grp		
			10	EPI Grp		
			11	AP1 Grp		
			12	AP2 Grp		
			13	AP3 Grp		
			14	PRT Grp		
			15	M2 Grp		
41	Changed parameter display	Changed Para	0	View All	0: View All	
			1	View Changed		
42	Multifunction key items	Multi Key Sel	0	None	0: None	
			1	UserGrp Selkey		
43	Macro function items	Macro Select	0	Basic	0: Basic	
			1	Compressor		
			2	Supply Fan		
			3	Exhaust Fan		
			4	Cooling Tower		
			5	Circul. Pump		
			6	Vacuum Pump		
			7	Constant Torque		
44	Deletion of trip history	Erase All Trip	0	0~9999	0: No	
			1	0~9999		
45	Deletion of user registration code	UserGrp AllDel	0	0~9999	0: No	
			1	0~9999		
46	Read parameter	Parameter Read	0	Date Format	0: No	
			1	Date Format		
47	Write parameter	Parameter Write	0	Date Format	0: No	
			1	Date Format		
48	Save parameter	Parameter Save	0	No	0: No	
			1	Yes		
50	Hide parameter mode	View Lock Set	0~9999		Un-locked	
51	Parameter mode hide password	View Lock Pw	0~9999		Password	
52	Lock parameter change	Key Lock Set	0~9999		Un-locked	
53	Parameter change lock password	Key Lock Pw	0~9999		Password	
60	Additional title update	Add Title Up	0	No	0: No	
			1	Yes		
61	Easy parameter setting	Easy Start On	0	No	1: Yes	
			1	Yes		
62	Reset of power consumption	WHCount Reset	0	No	0: No	
			1	Yes		
70[1]	Accumulated time of drive ON	On-time	Date Format		-	
71[2]	Accumulated time of driver run	Run-time	Date Format		-	
72	Reset of accumulated drive run time	Time Reset	0	No	0: No	
			1	Yes		
73[3]	Real Time	Real Time	Date Format		-	
74[4]	Accumulated cooling fan run time	Fan Time	Date Format		-	
75	Reset of cooling fan run time	Fan Time Rst	0	No	0: No	
			1	Yes		

[1] Date format is changed depending on the setting of 46: P3-06 (CNF-70 Default Date Format)
[2] Date format is changed depending on the setting of 46: P3-06 (CNF-71 Default Date Format)
[3] Date format is changed depending on the setting of 46: P3-06 (CNF-73 Default Date Format)
[4] Date format is changed depending on the setting of 46: P3-06 (CNF-74 Default Date Format)

AKSA OTOMASYON

Macro Group

Compressor(MC1) Group

Macro Code	Code	LCD Display	Default	
0	-	Jump Code	1 : CODE	
1	DRV 3	Acc Time	0.75~90kW	10.0
			110~250kW	30.0
			315~500kW	50.0
2	DRV 4	Dec Time	0.75~90kW	20.0
			110~250kW	60.0
			315~500kW	100.0
3	DRV 7	Freq Ref Src	1: Keypad-2	
4	DRV 9	Control Mode	1: Slip Compen	
5	DRV 11	JOG Frequency	20.00	
6	DRV 12	JOG Acc Time	20.00	
7	DRV 13	JOG Dec Time	13.0	
8	DRV 15	Torque Boost	20.0	
9	BAS 70	Acc Time-1	1: Auto1 10.0	
10	BAS 71	Dec Time-1	20.0	
11	ADV 10	Power-on Run	1: Yes	
12	ADV 65	U/D Save Mode	1: Yes	
13	CON 4	Carrier Freq	3.0	
14	CON 70	SS Mode	0: Flying Start-1	
15	CON 77	KEB Select	1: Yes	
16	OUT 32	Relay 2	14: Run	
17	PID 1	PID Sel	1: Yes	
18	PID 3	PID Output	0.00	
19	PID 4	PID Ref Value	-	
20	PID 5	PID Fdb Value	-	
21	PID 10	PID Ref 1 Src	4: I2	
22	PID 11	PID Ref 1 Set	0.5000	

• The table shows parameters shown in a macro group for each macro type.

Macro Code	Code	LCD Display	Default
23	PID 25	PID P-Gain 1	70.00
24	PID 26	PID I-Time 1	5.0
25	PID 50	PID Unit Sel	5: inWC
26	PID 51	PID Unit Scale	4: x 0.01
27	AP1 8	PID Sleep1Freq	5.00
28	AP1 21	Pre-PID Freq	30.00
29	AP1 22	Pre-PID Delay	120.0
30	PRT 8	RST Restart	11
31	PRT 9	Retry Number	3
32	PRT 10	Retry Delay	4.0
33	PRT 11	Lost KPD Mode	3: Dec
34	PRT 12	Lost Cmd Mode	2: Dec
35	PRT 13	Lost Cmd Time	4.0
36	PRT 40	ETH Trip Sel	1: Free Run
37	PRT 42	ETH 1min	120
38	PRT 52	Stall Level 1	130
39	PRT 66	DB Warn %ED	10
40	PRT 70	LDT Sel	1: Warning
41	PRT 72	LDT Source	0: Output Current
42	PRT 75	LDT Band Width	10% of max. value of LDT source
43	PRT 76	LDT Freq	20.00
44	M2 4	M2-Acc Time	10.0
45	M2 5	M2-Dec Time	20.0
46	M2 8	M2-Ctrl Mode	1: Slip Compen
47	M2 28	M2-Stall Lev	125
48	M2 29	M2-ETH 1min	120

Supply Fan(MC2) Group

Macro Code	Code	LCD Display	Default	
0	-	Jump Code	1 : CODE	
1	DRV 3	Acc Time	0.75~90kW	20.0
			110~250kW	60.0
			315~500kW	100.0
2	DRV 4	Dec Time	0.75~90kW	30.0
			110~250kW	90.0
			315~500kW	150.0
3	DRV 7	Freq Ref Src	1: Keypad-2	
4	DRV 11	JOG Frequency	15.00	
5	BAS 7	V/F Pattern	0: Linear	
6	BAS 70	Acc Time-1	20.0	
7	BAS 71	Dec Time-1	30.0	
8	ADV 10	Power-on Run	1: Yes	
9	ADV 50	E-Save Mode	2: Auto	
10	ADV 64	FAN Control	2: Temp Control	
11	ADV 65	U/D Save Mode	1: Yes	
12	CON 4	Carrier Freq	3.0	
13	CON 70	SS Mode	1: Flying Start-2	
14	CON 77	KEB Select	1: Yes	
15	OUT 32	Relay 2	10: Over Voltage	
16	PID 1	PID Sel	1: Yes	
17	PID 3	PID Output	-	
18	PID 4	PID Ref Value	-	
19	PID 5	PID Fdb Value	-	
20	PID 10	PID Ref 1 Src	4: I2	

Macro Code	Code	LCD Display	Default
21	PID 11	PID Ref 1 Set	0.5000
22	PID 25	PID P-Gain 1	40.00
23	PID 26	PID I-Time 1	20.0
24	PID 36	PID Out Inv	1: Yes
25	PID 50	PID Unit Sel	5: inWC
26	PID 51	PID Unit Scale	4: x 0.01
27	AP1 21	Pre-PID Freq	30.00
28	AP1 22	Pre-PID Delay	120.0
29	PRT 8	RST Restart	11
30	PRT 9	Retry Number	0
31	PRT 10	Retry Delay	20.0
32	PRT 11	Lost KPD Mode	3: Dec
33	PRT 12	Lost Cmd Mode	3: Hold Input
34	PRT 40	ETH Trip Sel	1: Free Run
35	PRT 42	ETH 1min	120
36	PRT 52	Stall Level 1	130
37	PRT 70	LDT Sel	1: Warning
38	PRT 72	LDT Source	0: Output Current
39	PRT 75	LDT Band Width	10% of max. value of LDT source
40	PRT 76	LDT Freq	10.00
41	PRT 77	LDT Restart DT	500.0
42	M2 25	M2-V/F Patt	1: Square
43	M2 28	M2-Stall Lev	110
44	M2 29	M2-ETH 1min	110

Macro Group

Exhaust Fan(MC3) Group

Macro Code	Code	LCD Display	Default	
0	-	Jump Code	1 : CODE	
1	DRV 3	Acc Time	0.75~90kW	20.0
			110~250kW	60.0
			315~500kW	100.0
2	DRV 4	Dec Time	0.75~90kW	30.0
			110~250kW	90.0
			315~500kW	150.0
3	DRV 7	Freq Ref Src	1: Keypad-2	
4	DRV 11	JOG Frequency	15.00	
5	BAS 7	V/F Pattern	1: Square	
6	BAS 70	Acc Time-1	20.0	
7	BAS 71	Dec Time-1	30.0	
8	BAS 72	Acc Time-2	22.5	
9	BAS 73	Dec Time-2	32.5	
10	BAS 74	Acc Time-3	25.0	
11	BAS 75	Dec Time-3	35.0	
12	BAS 76	Acc Time-4	27.5	
13	BAS 77	Dec Time-4	37.5	
14	BAS 78	Acc Time-5	30.0	
15	BAS 80	Acc Time-6	32.5	
16	BAS 81	Dec Time-6	42.5	
17	BAS 82	Acc Time-7	35.0	
18	BAS 83	Dec Time-7	45.0	
19	ADV 10	Power-on Run	1: Yes	
20	ADV 50	E-Save Mode	2: Auto	
21	ADV 64	FAN Control	2: Temp Control	
22	ADV 65	U/D Save Mode	1: Yes	
23	CON 4	Carrier Freq	3.0	
24	CON 70	SS Mode	1: Flying Start-2	
25	CON 77	KEB Select	1: Yes	
26	OUT 32	Relay 2	10: Over Voltage	

Macro Code	Code	LCD Display	Default
27	PID 1	PID Sel	1: Yes
28	PID 3	PID Output	-
29	PID 4	PID Ref Value	-
30	PID 5	PID Fdb Value	-
31	PID 10	PID Ref 1 Src	4: I2
32	PID 11	PID Ref 1 Set	0.5000
33	PID 25	PID P-Gain 1	35.00
34	PID 26	PID I-Time 1	15.0
35	PID 36	PID Out Inv	1: Yes
36	PID 50	PID Unit Sel	5: inWC
37	PID 51	PID Unit Scale	4: x0.01
38	AP1 21	Pre-PID Freq	30.00
39	PRT 8	RST Restart	11
40	PRT 9	Retry Number	0
41	PRT 10	Retry Delay	10.0
42	PRT 11	Lost KPD Mode	3: Dec
43	PRT 12	Lost Cmd Mode	3: Hold Input
44	PRT 40	ETH Trip Sel	1: Free Run
45	PRT 42	ETH 1min	120
46	PRT 52	Stall Level 1	130
47	PRT 70	LDT Sel	1: Warning
48	PRT 72	LDT Area Sel	0: Output Current
49	PRT 75	LDT Band Width	10% of max. value of LDT source
50	PRT 76	LDT Freq	10.00
51	PRT 77	LDT Restart DT	300.0
52	M2 4	M2-Acc Time	10.0
53	M2 5	M2-Dec Time	20.0
54	M2 25	M2-V/F Patt	1: Square
55	M2 28	M2-Stall Lev	110
56	M2 29	M2-ETH 1min	110

Cooling Tower(MC4) Group

Macro Code	Code	LCD Display	Default	
0	-	Jump Code	1 : CODE	
1	DRV 3	Acc Time	0.75~90kW	20.0
			110~250kW	60.0
			315~500kW	100.0
2	DRV 4	Dec Time	0.75~90kW	30.0
			110~250kW	90.0
			315~500kW	150.0
3	DRV 7	Freq Ref Src	1: Keypad-2	
4	DRV 11	JOG Frequency	15.00	
5	BAS 7	V/F Pattern	1: Square	
6	BAS 70	Acc Time-1	20.0	
7	BAS 71	Dec Time-1	30.0	
8	BAS 72	Acc Time-2	22.5	
9	BAS 73	Dec Time-2	32.5	
10	BAS 74	Acc Time-3	25.0	
11	BAS 75	Dec Time-3	35.0	
12	BAS 76	Acc Time-4	27.5	
13	BAS 77	Dec Time-4	37.5	
14	BAS 78	Acc Time-5	30.0	
15	BAS 80	Acc Time-6	32.5	
16	BAS 81	Dec Time-6	42.5	
17	BAS 82	Acc Time-7	42.5	
18	BAS 83	Dec Time-7	45.0	
19	ADV 10	Power-on Run	1: Yes	
20	ADV 50	E-Save Mode	2: Auto	
21	ADV 64	FAN Control	2: Temp Control	
22	ADV 65	U/D Save Mode	1: Yes	
23	CON 4	Carrier Freq	3.0	
24	CON 70	SS Mode	1: Flying Start-2	
25	CON 77	KEB Select	1: Yes	

Macro Code	Code	LCD Display	Default
26	OUT 32	Relay 2	10: Over Voltage
27	PID 1	PID Sel	1: Yes
28	PID 3	PID Output	-
29	PID 4	PID Ref Value	-
30	PID 5	PID Fdb Value	-
31	PID 10	PID Ref 1 Src	4: I2
32	PID 11	PID Ref 1 Set	50.00
33	PID 25	PID P-Gain 1	40.00
34	PID 26	PID I-Time 1	15.0
35	PID 36	PID Out Inv	1: Yes
36	PID 50	PID Unit Sel	3: °F
37	PID 51	PID Unit Scale	2: x1
38	AP1 21	Pre-PID Freq	30.00
39	AP1 22	Pre-PID Delay	120.0
40	PRT 8	RST Restart	11
41	PRT 9	Retry Number	0
42	PRT 10	Retry Delay	10.0
43	PRT 11	Lost KPD Mode	3: Dec
44	PRT 12	Lost Cmd Mode	3: Hold Input
45	PRT 40	ETH Trip Sel	1: Free Run
46	PRT 42	ETH 1min	120
47	PRT 52	Stall Level 1	130
48	PRT 70	LDT Sel	1: Warning
49	PRT 72	LDT Source	0: Output Current
50	PRT 75	LDT Band Width	10% of max. value of LDT source
51	PRT 76	LDT Freq	10.00
52	PRT 77	LDT Restart DT	300.0
53	M2 25	M2-V/F Patt	1: Square
54	M2 28	M2-Stall Lev	110
55	M2 29	M2-ETH 1min	110

AKSA OTOMASYON

Circular Pump (MC5) Group

Macro Code	Code	LCD Display	Default	
0	-	Jump Code	1 : CODE	
1	DRV 3	Acc Time	0.75~90kW 110~250kW 315~500kW	30.0 90.0 150.0
2	DRV 4	Dec Time	0.75~90kW 110~250kW 315~500kW	50.0 150.0 250.0
3	DRV 7	Freq Ref Src	1: Keypad-2	
4	DRV 9	Control Mode	1: Slip Compen	
5	DRV 11	JOG Frequency	15.00	
6	DRV 12	JOG Acc Time	30.0	
7	DRV 13	JOG Dec Time	50.0	
8	DRV 15	Torque Boost	1: Auto1	
9	BAS 7	V/F Pattern	1: Square	
10	BAS 70	Acc Time-1	30.0	
11	BAS 71	Dec Time-1	50.0	
12	BAS 72	Acc Time-2	32.0	
13	BAS 73	Dec Time-2	52.0	
14	BAS 74	Acc Time-3	34.0	
15	BAS 75	Dec Time-3	54.0	
16	BAS 76	Acc Time-4	36.0	
17	BAS 77	Dec Time-4	56.0	
18	BAS 78	Acc Time-5	38.0	
19	BAS 79	Dec Time-5	58.0	
20	BAS 80	Acc Time-6	40.0	
21	BAS 81	Dec Time-6	59.0	
22	BAS 82	Acc Time-7	42.0	
23	BAS 83	Dec Time-7	60.0	
24	ADV 10	Power-on Run	1: Yes	
25	ADV 25	Freq Limit Lo	20.00	
26	ADV 50	E-Save Mode	2: Auto	
27	ADV 64	FAN Control	2: Temp Control	
28	ADV 65	U/D Save Mode	1: Yes	
29	CON 4	Carrier Freq	3.0	
30	CON 70	SS Mode	0: Flying Start-1	
31	CON 77	KEB Select	1: Yes	

Macro Code	Code	LCD Display	Default
32	OUT 32	Relay 2	14: Run
33	PID 1	PID Sel	1: Yes
34	PID 3	PID Output	-
35	PID 4	PID Ref Value	-
36	PID 5	PID Fdb Value	-
37	PID 10	PID Ref 1 Src	4: I2
38	PID 11	PID Ref 1 Set	50.00
39	PID 25	PID P-Gain 1	50.00
40	PID 26	PID I-Time 1	5.0
41	PID 50	PID Unit Sel	2: PSI
42	PID 51	PID Unit Scale	3: x0.1
43	AP1 8	PID Sleep1Freq	10.00
44	AP1 21	Pre-PID Freq	30.00
45	AP1 22	Pre-PID Delay	120.0
46	PRT 8	RST Restart	11
47	PRT 9	Retry Number	3
48	PRT 10	Retry Delay	5.0
49	PRT 11	Lost KPD Mode	3: Dec
50	PRT 12	Lost Cmd Mode	2: Dec
51	PRT 40	ETH Trip Sel	1: Free Run
52	PRT 42	ETH 1min	120
53	PRT 52	Stall Level 1	130
54	PRT 60	PipeBroken Sel	1: Warning
55	PRT 61	PipeBroken Lev	90.0
56	PRT 62	Pipe Broken DT	22.0
57	PRT 70	LDT Sel	1: Warning
58	PRT 72	LDT Source	0: Output Current
59	PRT 75	LDT Band Width	10% of max. value of LDT source
60	PRT 76	LDT Freq	10.00
61	PRT 77	LDT Restart DT	100.0
62	M2 4	M2-Acc Time	10.0
63	M2 5	M2-Dec Time	20.0
64	M2 25	M2-V/F Patt	1: Square
65	M2 28	M2-Stall Lev	125
66	M2 29	M2-ETH 1min	120

Macro Group

Vacuum Pump (MC6) Group

Macro Code	Code	LCD Display	Default	
0	-	Jump Code	1 : CODE	
1	DRV 3	Acc Time	0.75~90kW	30.0
			110~250kW	90.0
			315~500kW	150.0
2	DRV 4	Dec Time	0.75~90kW	60.0
			110~250kW	180.0
			315~500kW	300.0
3	DRV 7	Freq Ref Src	1: Keypad-2	
4	DRV 9	Control Mode	1: Slip Compen	
5	DRV 11	JOG Frequency	20.00	
6	DRV 12	JOG Acc Time	30.0	
7	DRV 13	JOG Dec Time	60.0	
8	DRV 15	Torque Boost	1: Auto1	
9	BAS 7	V/F Pattern	1: Square	
10	BAS 70	Acc Time-1	30.0	
11	BAS 71	Dec Time-1	50.0	
12	BAS 72	Acc Time-2	32.0	
13	BAS 73	Dec Time-2	52.0	
14	BAS 74	Acc Time-3	34.0	
15	BAS 75	Dec Time-3	54.0	
16	BAS 76	Acc Time-4	36.0	
17	BAS 77	Dec Time-4	56.0	
18	BAS 78	Acc Time-5	38.0	
19	BAS 79	Dec Time-5	58.0	
20	BAS 80	Acc Time-6	40.0	
21	BAS 81	Dec Time-6	59.0	
22	BAS 82	Acc Time-7	42.0	
23	BAS 83	Dec Time-7	60.0	
24	ADV 10	Power-on Run	1: Yes	
25	ADV 25	Freq Limit Lo	40.00	
26	ADV 64	FAN Control	2: Temp Control	
27	ADV 65	U/D Save Mode	1: Yes	
28	CON 4	Carrier Freq	3.0	
29	CON 70	SS Mode	0: Flying Start-1	
30	CON 77	KEB Select	1 : Yes	

Macro Code	Code	LCD Display	Default
31	OUT 32	Relay 2	14: Run
32	PID 1	PID Sel	1 : Yes
33	PID 3	PID Output	-
34	PID 4	PID Ref Value	-
35	PID 5	PID Fdb Value	-
36	PID 10	PID Ref 1 Src	4: I2
37	PID 11	PID Ref 1 Set	5.000
38	PID 25	PID P-Gain 1	50.00
39	PID 26	PID I-Time 1	2.5
40	PID 50	PID Unit Sel	5: inWC
41	PID 51	PID Unit Scale	3: x0.1
42	AP1 21	Pre-PID Freq	30.00
43	PRT 8	RST Restart	11
44	PRT 9	Retry Number	3
45	PRT 10	Retry Delay	4.0
46	PRT 11	Lost KPD Mode	3: Dec
47	PRT 12	Lost Cmd Mode	3:Hold npvt
48	PRT 40	ETH Trip Sel	1: Free Run
49	PRT 42	ETH 1min	120
50	PRT 52	Stall Level 1	130
51	PRT 60	PipeBroken Sel	1: Warning
52	PRT 61	PipeBroken Lev	90.0
53	PRT 62	Pipe Broken DT	22.0
54	PRT 66	DB Warn %ED	10
55	PRT 70	LDT Sel	1: Warning
56	PRT 72	LDT Source	0: Output Input
57	PRT 75	LDT Band Width	10% of max. value of LDT source
58	PRT 76	LDT Freq	15.00
59	PRT 77	LDT Restart DT	100.0
60	M2 4	M2-Acc Time	10.0
61	M2 5	M2-Dec Time	20.0
62	M2 8	M2-Ctrl Mode	1: Slip Compen
63	M2 25	M2-V/F Patt	1: Square
64	M2 28	M2-Stall Lev	125
65	M2 29	M2-ETH 1min	120

Constant Torque(MC7) Group

Macro Code	Code	LCD Display	Default	
0	-	Jump Code	1 : CODE	
1	DRV 3	Acc Time	0.75~90kW	30.0
			110~250kW	90.0
			315~500kW	150.0
2	DRV 4	Dec Time	0.75~90kW	20.0
			110~250kW	60.0
			315~500kW	100.0
3	DRV 7	Freq Ref Src	1: Keypad-2	
4	DRV 9	Control Mode	1: Slip Compen	
5	DRV 12	JOG Acc Time	10.0	
6	DRV 13	JOG Dec Time	20.0	
7	DRV 15	Torque Boost	1: Auto1	
8	BAS 70	Acc Time-1	10.0	
9	BAS 71	Dec Time-1	20.0	
10	BAS 72	Acc Time-2	12.5	
11	BAS 73	Dec Time-2	22.5	
12	BAS 74	Acc Time-3	15.0	
13	BAS 75	Dec Time-3	25.0	
14	BAS 76	Acc Time-4	17.5	
15	BAS 77	Dec Time-4	27.5	
16	BAS 78	Acc Time-5	20.0	
17	BAS 79	Dec Time-5	30.0	
18	BAS 80	Acc Time-6	22.5	
19	BAS 81	Dec Time-6	32.5	

Macro Code	Code	LCD Display	Default
20	BAS 82	Acc Time-7	25.0
21	BAS 83	Dec Time-7	35.0
22	ADV 1	Acc Pattern	1: S-curve
23	ADV 2	Dec Pattern	1: S-curve
24	ADV 25	Freq Linit Lo	20.00
25	ADV 74	RegenAvd Sel	1: Yes
26	CON 4	Carrier Freq	3.0
27	CON 70	SS Mode	0: Flying Start-1
28	CON 77	KEB Select	1: Yes
29	OUT 32	Relay 2	14: Run
30	API 21	Pre-PID Freq	30.00
31	API 22	Pre-PID Delay	120.0
32	PRT 12	Lost Cmd Mode	2: Dec
33	PRT 40	ETH Trip Sel	2: Dec
34	PRT 66	DB Warn %ED	10
35	PRT 70	LDT Sel	1: Warning
36	PRT 72	LDT Source	0: Output Current
37	PRT 75	LDT Band Width	10% of max. value of LDT source
38	PRT 76	LDT Freq	5.00
39	PRT 77	LDT Restart DT	250.0
40	M2 4	M2-Acc Time	10.0
41	M2 5	M2-Dec Time	20.0
42	M2 8	M2-Ctrl Mode	1: Slip Compen

Memo

Dimensions

IP 20 Type

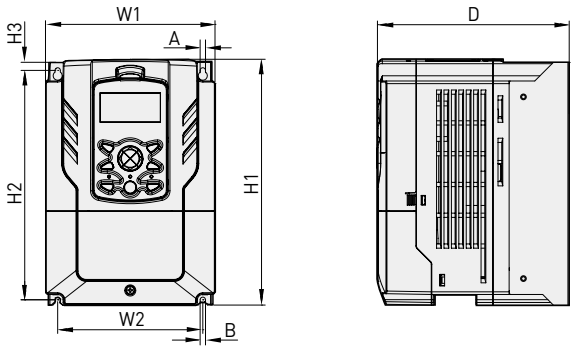

Unit: mm(inches)

Product (Model)		W1	W2	H1	H2	H3	D	A	B	kg
3-Phase 200V	LSLV0008H100-2	160(6.30)	137(5.39)	232(9.13)	216.5(8.52)	10.5(0.41)	181(7.13)	5(0.20)	5(0.20)	3.3
	LSLV0015H100-2	160(6.30)	137(5.39)	232(9.13)	216.5(8.52)	10.5(0.41)	181(7.13)	5(0.20)	5(0.20)	3.3
	LSLV0022H100-2	160(6.30)	137(5.39)	232(9.13)	216.5(8.52)	10.5(0.41)	181(7.13)	5(0.20)	5(0.20)	3.3
	LSLV0037H100-2	160(6.30)	137(5.39)	232(9.13)	216.5(8.52)	10.5(0.41)	181(7.13)	5(0.20)	5(0.20)	3.3
	LSLV0055H100-2	160(6.30)	137(5.39)	232(9.13)	216.5(8.52)	10.5(0.41)	181(7.13)	5(0.20)	5(0.20)	3.3
	LSLV0075H100-2	160(6.30)	137(5.39)	232(9.13)	216.5(8.52)	10.5(0.41)	181(7.13)	5(0.20)	5(0.20)	3.3
	LSLV0110H100-2	160(6.30)	137(5.39)	232(9.13)	216.5(8.52)	10.5(0.41)	181(7.13)	5(0.20)	5(0.20)	3.3
3-Phase 400V	LSLV0008H100-2	160(6.30)	137(5.39)	232(9.13)	216.5(8.52)	10.5(0.41)	181(7.13)	5(0.20)	5(0.20)	3.3
	LSLV0015H100-2	160(6.30)	137(5.39)	232(9.13)	216.5(8.52)	10.5(0.41)	181(7.13)	5(0.20)	5(0.20)	3.3
	LSLV0022H100-2	160(6.30)	137(5.39)	232(9.13)	216.5(8.52)	10.5(0.41)	181(7.13)	5(0.20)	5(0.20)	3.3
	LSLV0037H100-2	160(6.30)	137(5.39)	232(9.13)	216.5(8.52)	10.5(0.41)	181(7.13)	5(0.20)	5(0.20)	3.3
	LSLV0055H100-4	160(6.30)	137(5.39)	232(9.13)	216.5(8.52)	10.5(0.41)	181(7.13)	5(0.20)	5(0.20)	3.3
	LSLV0075H100-4	160(6.30)	137(5.39)	232(9.13)	216.5(8.52)	10.5(0.41)	181(7.13)	5(0.20)	5(0.20)	3.3
	LSLV0110H100-4	160(6.30)	137(5.39)	232(9.13)	216.5(8.52)	10.5(0.41)	181(7.13)	5(0.20)	5(0.20)	3.3

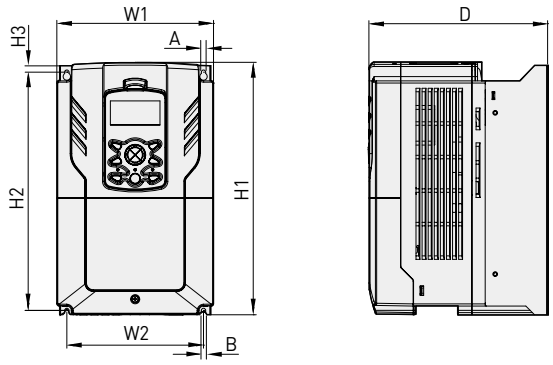

Unit: mm(inches)

Product (Model)		W1	W2	H1	H2	H3	D	A	B	kg
3-Phase 200V	LSLV0150H100-2	180(7.09)	157(6.18)	290(44.42)	273.7(10.78)	11.3(0.45)	205.3(8.08)	5(0.20)	5(0.20)	4.6
3-Phase 400V	LSLV0150H100-4	180(7.09)	157(6.18)	290(44.42)	273.7(10.78)	11.3(0.45)	205.3(8.08)	5(0.20)	5(0.20)	4.6
	LSLV0185H100-4	180(7.09)	157(6.18)	290(44.42)	273.7(10.78)	11.3(0.45)	205.3(8.08)	5(0.20)	5(0.20)	4.8

AKSA OTOMASYON

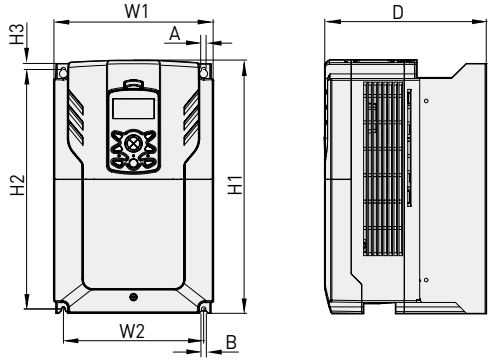

Unit: mm(inches)

Product (Model)		W1	W2	H1	H2	H3	D	A	B	kg
3-Phase 200V	LSLV0185H100-2	220(8.66)	193.8(7.63)	350(13.78)	331(13.03)	13(0.51)	223.2(8.79)	6(0.24)	6(0.24)	7.1
3-Phase 400V	LSLV0220H100-4	220(8.66)	193.8(7.63)	350(13.78)	331(13.03)	13(0.51)	223.2(8.79)	6(0.24)	6(0.24)	7.5
	LSLV0300H100-4	220(8.66)	193.8(7.63)	350(13.78)	331(13.03)	13(0.51)	223.2(8.79)	6(0.24)	6(0.24)	7.5

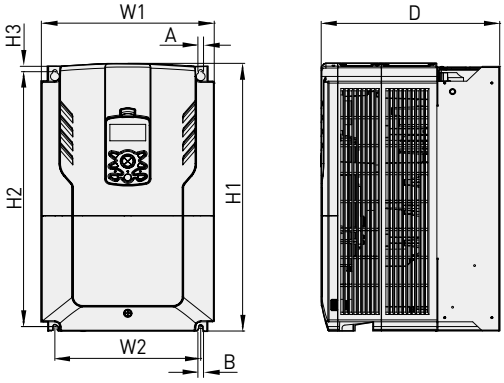

Unit: mm(inches)

Product (Model)		W1	W2	H1	H2	H3	D	A	B	kg
3-Phase 400V	LSLV0370H100-4	275(10.83)	232(9.13)	450(17.72)	428.5(16.87)	14(0.55)	284(11.18)	7(0.28)	7(0.28)	26

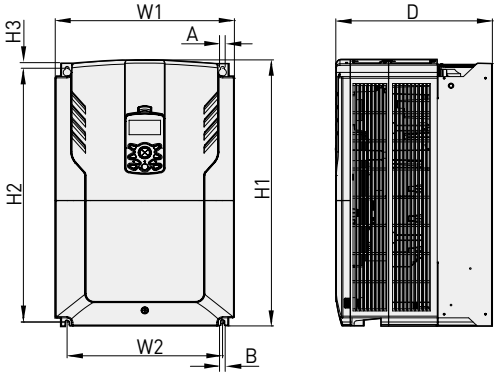

Unit: mm(inches)

Product (Model)		W1	W2	H1	H2	H3	D	A	B	kg
3-Phase 400V	LSLV0450H100-4	325(12.08)	282(11.10)	510(20.08)	486.5(19.15)	16(0.63)	284(11.18)	7(0.28)	7(0.28)	35
	LSLV0550H100-4	325(12.08)	282(11.10)	510(20.08)	486.5(19.15)	16(0.63)	284(11.18)	7(0.28)	7(0.28)	35

Dimensions

IP 20 Type

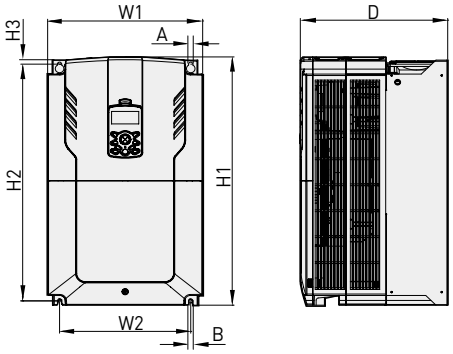

Unit: mm(inches)

Product (Model)		W1	W2	H1	H2	H3	D	A	B	kg
3-Phase 400V	LSLV0750H100-4	325(12.08)	275(10.83)	550(21.65)	524.5(20.65)	16(0.63)	309(12.80)	9(0.35)	9(0.35)	43
	LSLV0900H100-4	325(12.08)	275(10.83)	550(21.65)	524.5(20.65)	16(0.63)	309(12.80)	9(0.35)	9(0.35)	43

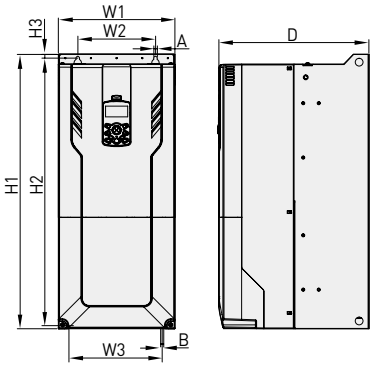

Unit: mm(inches)

Product (Model)		W1	W2	H1	H2	H3	D	A	B	kg
3-Phase 400V	LSLV1100H100-4	300(11.81)	240(9.45)	706(27.80)	688.5(27.11)	9.5(0.37)	386(15.20)	9(0.35)	8(0.31)	55.8
	LSLV1320H100-4	300(11.81)	240(9.45)	706(27.80)	688.5(27.11)	9.5(0.37)	386(15.20)	9(0.35)	8(0.31)	55.8
	LSLV1600H100-4	380(14.96)	300(11.81)	705(27.76)	685.5(26.99)	9.5(0.37)	396(15.59)	9(0.35)	9(0.35)	74.7
	LSLV1850H100-4	380(14.96)	300(11.81)	705(27.76)	685.5(26.99)	9.5(0.37)	396(15.59)	9(0.35)	9(0.35)	74.7

IP 00 Type

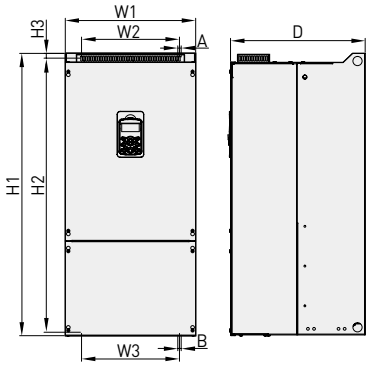

Unit: mm(inches)

Product (Model)		W1	W2	H1	H2	H3	D	A	B	kg
3-Phase 400V	LSLV2200H100-4	440(17.32)	320(12.60)	922.3(36.31)	895.5(35.26)	15.5(0.61)	440(17.32)	11(0.43)	11(0.43)	120
	LSLV2500H100-4	440(17.32)	320(12.60)	922.3(36.31)	895.5(35.26)	15.5(0.61)	440(17.32)	11(0.43)	11(0.43)	120
	LSLV3150H100-4	600(23.62)	420(16.54)	1000(39.37)	972(38.27)	15(0.59)	500(19.69)	14(0.55)	14(0.55)	185.5
	LSLV3550H100-4	600(23.62)	420(16.54)	1000(39.37)	972(38.27)	15(0.59)	500(19.69)	14(0.55)	14(0.55)	185.5
	LSLV4000H100-4	600(23.62)	420(16.54)	1000(39.37)	972(38.27)	15(0.59)	500(19.69)	14(0.55)	14(0.55)	185.5
	LSLV5000H100-4	776(30.55)	500(19.69)	1054(41.50)	1021(40.20)	20(0.79)	500(19.69)	14(0.55)	14(0.55)	265

AKSA OTOMASYON

Flange

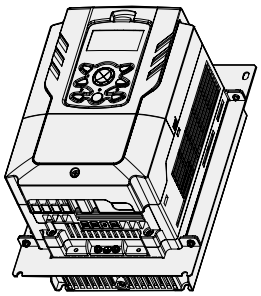

Drive + Flange

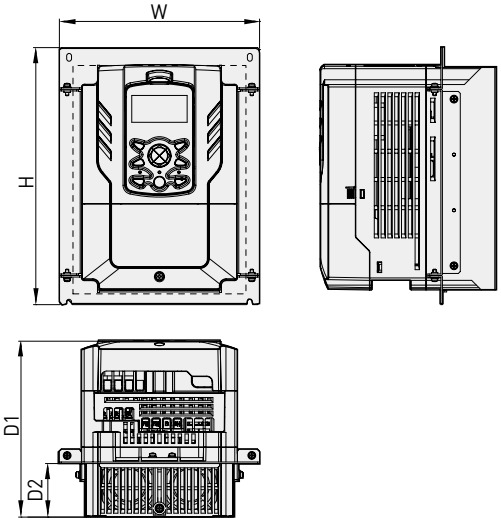

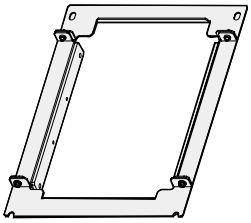

Flange

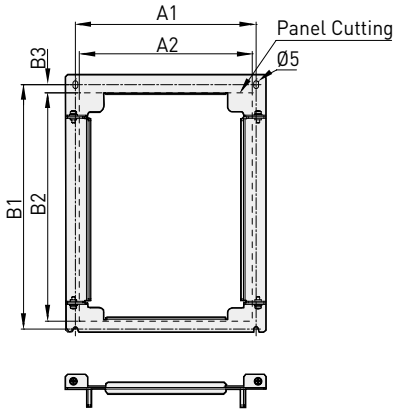

Unit: mm(inches)

Product (Model)		W	H	D1	D2	A1	A2	B1	B2	B3	kg
3-Phase 200V	LSLV0008H100-2	206(8.11)	264.5(10.41)	181(7.13)	55.1(2.17)	186(7.32)	178(7.01)	251.5(9.90)	235(9.25)	8.4(0.33)	3.7
	LSLV0015H100-2	206(8.11)	264.5(10.41)	181(7.13)	55.1(2.17)	186(7.32)	178(7.01)	251.5(9.90)	235(9.25)	8.4(0.33)	3.7
	LSLV0022H100-2	206(8.11)	264.5(10.41)	181(7.13)	55.1(2.17)	186(7.32)	178(7.01)	251.5(9.90)	235(9.25)	8.4(0.33)	3.7
	LSLV0037H100-2	206(8.11)	264.5(10.41)	181(7.13)	55.1(2.17)	186(7.32)	178(7.01)	251.5(9.90)	235(9.25)	8.4(0.33)	3.7
	LSLV0055H100-2	206(8.11)	264.5(10.41)	181(7.13)	55.1(2.17)	186(7.32)	178(7.01)	251.5(9.90)	235(9.25)	8.4(0.33)	3.7
	LSLV0075H100-2	206(8.11)	264.5(10.41)	181(7.13)	55.1(2.17)	186(7.32)	178(7.01)	251.5(9.90)	235(9.25)	8.4(0.33)	3.7
	LSLV0110H100-2	206(8.11)	264.5(10.41)	181(7.13)	55.1(2.17)	186(7.32)	178(7.01)	251.5(9.90)	235(9.25)	8.4(0.33)	3.7
3-Phase 400V	LSLV0008H100-4	206(8.11)	264.5(10.41)	181(7.13)	55.1(2.17)	186(7.32)	178(7.01)	251.5(9.90)	235(9.25)	8.4(0.33)	3.7
	LSLV0015H100-4	206(8.11)	264.5(10.41)	181(7.13)	55.1(2.17)	186(7.32)	178(7.01)	251.5(9.90)	235(9.25)	8.4(0.33)	3.7
	LSLV0022H100-4	206(8.11)	264.5(10.41)	181(7.13)	55.1(2.17)	186(7.32)	178(7.01)	251.5(9.90)	235(9.25)	8.4(0.33)	3.7
	LSLV0037H100-4	206(8.11)	264.5(10.41)	181(7.13)	55.1(2.17)	186(7.32)	178(7.01)	251.5(9.90)	235(9.25)	8.4(0.33)	3.7
	LSLV0055H100-4	206(8.11)	264.5(10.41)	181(7.13)	55.1(2.17)	186(7.32)	178(7.01)	251.5(9.90)	235(9.25)	8.4(0.33)	3.7
	LSLV0075H100-4	206(8.11)	264.5(10.41)	181(7.13)	55.1(2.17)	186(7.32)	178(7.01)	251.5(9.90)	235(9.25)	8.4(0.33)	3.7
	LSLV0110H100-4	206(8.11)	264.5(10.41)	181(7.13)	55.1(2.17)	186(7.32)	178(7.01)	251.5(9.90)	235(9.25)	8.4(0.33)	3.7

Dimensions

Flange

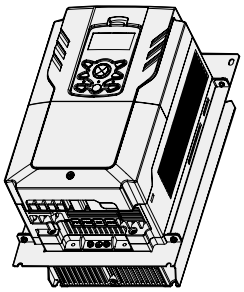

Drive + Flange

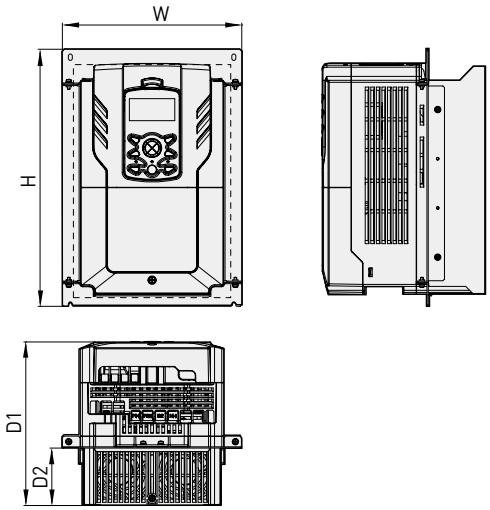

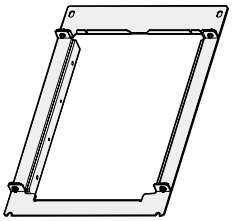

Flange

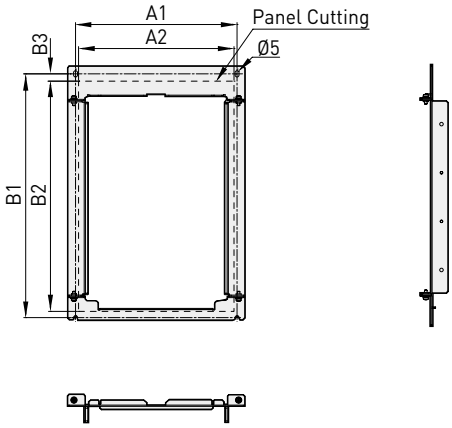

Unit: mm(inches)

Product (Model)		W	H	D1	D2	A1	A2	B1	B2	B3	kg
3-Phase 200V	LSLV0150H100-2	225.2(8.87)	322.7(12.70)	205.3(8.08)	72.1(2.84)	205.2(8.08)	197.5(7.78)	309.7(12.19)	292.5(11.52)	9.3(0.34)	4.6
3-Phase 400V	LSLV0150H100-4	225.2(8.87)	322.7(12.70)	205.3(8.08)	72.1(2.84)	205.2(8.08)	197.5(7.78)	309.7(12.19)	292.5(11.52)	9.3(0.34)	4.6
	LSLV0185H100-4	225.2(8.87)	322.7(12.70)	205.3(8.08)	72.1(2.84)	205.2(8.08)	197.5(7.78)	309.7(12.19)	292.5(11.52)	9.3(0.34)	4.8

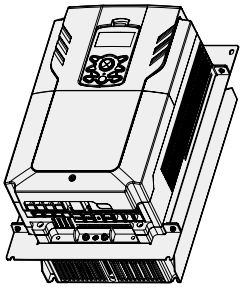

Drive + Flange

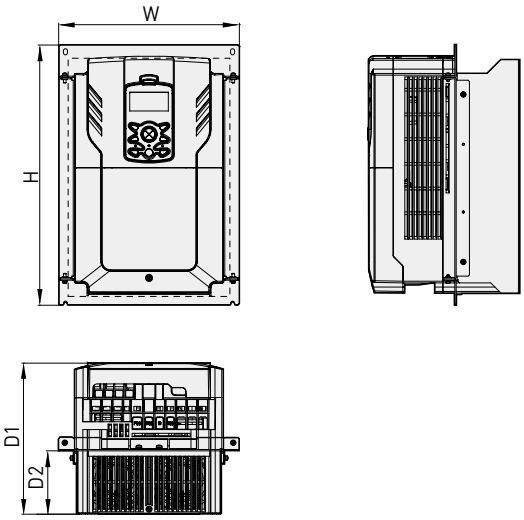

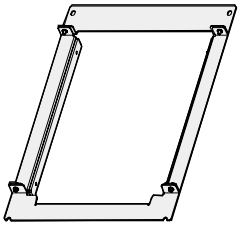

Flange

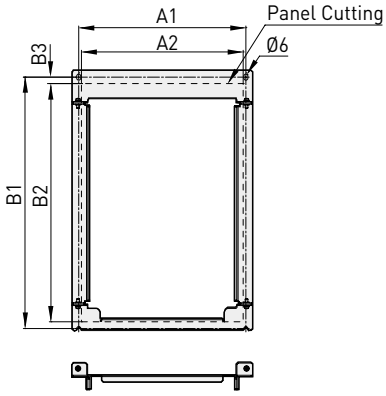

Unit: mm(inches)

Product (Model)		W	H	D1	D2	A1	A2	B1	B2	B3	kg
3-Phase 200V	LSLV0185H100-2	267(10.51)	384.5(15.14)	223.2(8.79)	93.6(3.69)	247(9.72)	239(9.41)	371.5(14.63)	352(13.86)	9.5(0.37)	8.3
3-Phase 400V	LSLV0220H100-4	267(10.51)	384.5(15.14)	223.2(8.79)	93.6(3.69)	247(9.72)	239(9.41)	371.5(14.63)	352(13.86)	9.5(0.37)	8.3
	LSLV0300H100-4	267(10.51)	384.5(15.14)	223.2(8.79)	93.6(3.69)	247(9.72)	239(9.41)	371.5(14.63)	352(13.86)	9.5(0.37)	8.3

Dimensions

Flange

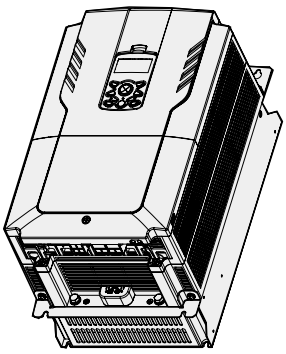

Drive + Flange

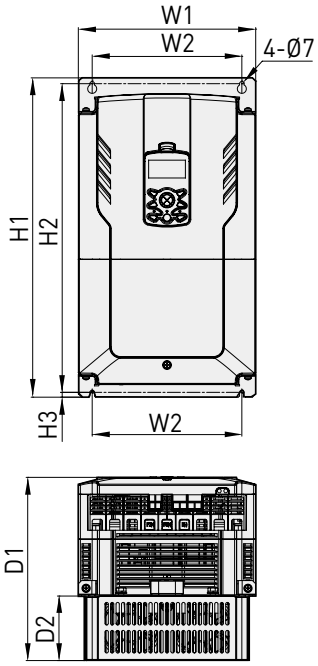

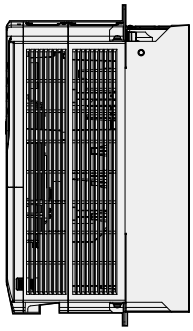

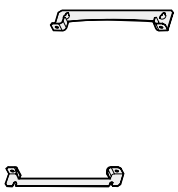

Flange

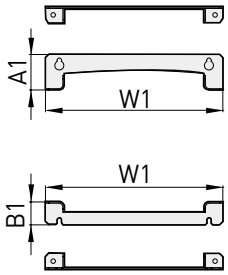

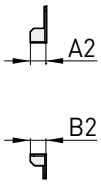

Unit: mm(inches)

Product (Model)		W1	W2	H1	H2	H3	D1	D2	A1	A2	B1	B2	kg
3-Phase 400V	LSLV0370H100-4	275 (10.83)	232 (9.13)	495 (19.49)	478.5 (18.84)	7.5 (0.30)	284 (11.18)	100 (3.94)	55 (2.17)	24 (0.98)	35.5 (1.40)	24 (0.98)	26.4

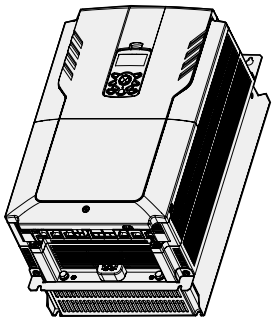

Drive + Flange

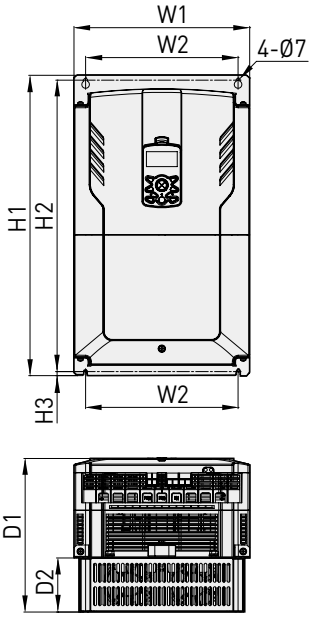

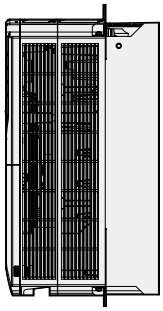

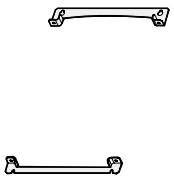

Flange

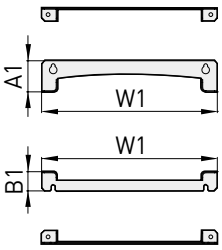

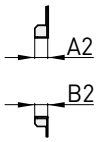

Unit: mm(inches)

Product (Model)		W1	W2	H1	H2	H3	D1	D2	A1	A2	B1	B2	kg
3-Phase 400V	LSLV0450H100-4	325 (12.80)	282 (11.10)	55.5 (21.87)	539 (21.22)	7.5 (0.30)	284 (11.18)	100 (3.94)	57.5 (2.26)	24 (0.94)	35.5 (1.40)	24 (0.94)	35.4
	LSLV0550H100-4	325 (12.80)	282 (11.10)	55.5 (21.87)	539 (21.22)	7.5 (0.30)	284 (11.18)	100 (3.94)	57.5 (2.26)	24 (0.94)	35.5 (1.40)	24 (0.94)	35.4

Dimensions

Flange

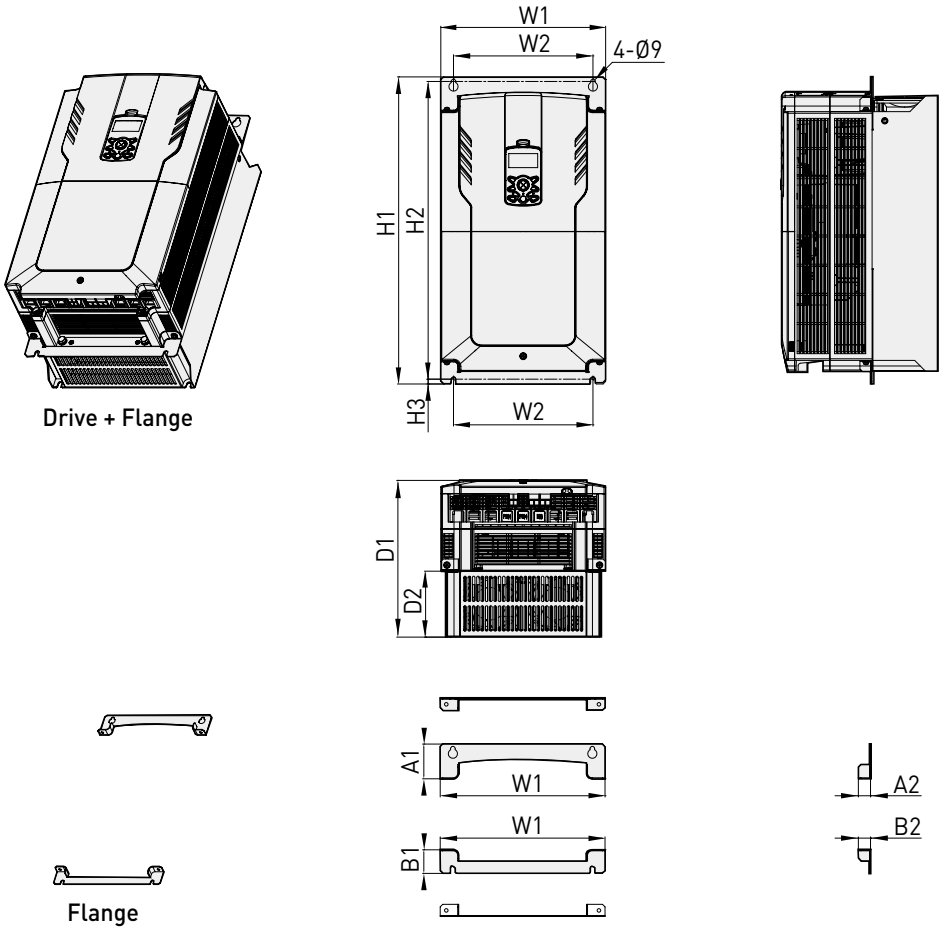

Unit: mm(inches)

Product (Model)		W1	W2	H1	H2	H3	D1	D2	A1	A2	B1	B2	kg
3-Phase 400V	LSLV0750H100-4	325 (12.80)	275 (10.83)	605.5 (23.84)	587 (23.11)	9.5 (0.37)	309 (12.17)	130 (5.12)	57.5 (2.26)	24 (0.94)	46.5 (1.83)	24 (0.94)	35.4
	LSLV0900H100-4	325 (12.80)	275 (10.83)	605.5 (23.84)	587 (23.11)	9.5 (0.37)	309 (12.17)	130 (5.12)	57.5 (2.26)	24 (0.94)	46.5 (1.83)	24 (0.94)	35.4

Conduit

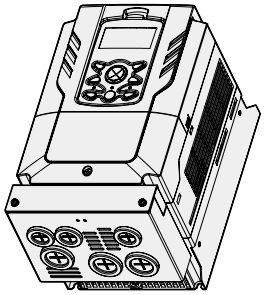

Drive + Conduit

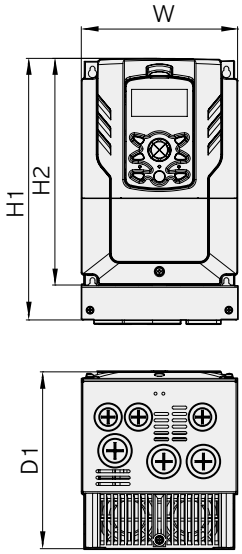

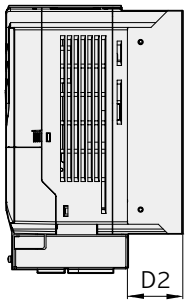

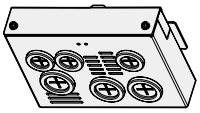

Conduit

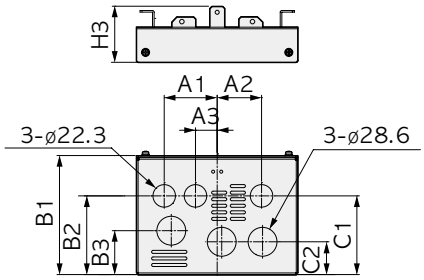

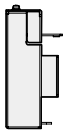

*Without rubber packing

Unit: mm(inches)

Product (Model)		W	H1	H2	H3	D1	D2	A1	A2	A3	B1	B2	B3	C1	C2	kg
3-Phase 200V	LSLV0008H100-2	160(6.30)	267.8(10.54)	232(9.13)	55.6(2.19)	181(7.13)	56.7(2.23)	52.5(2.07)	44(1.73)	21.5(0.85)	117.6(4.63)	78(3.07)	43.5(1.71)	78(3.07)	32.5(1.28)	3.9
	LSLV0015H100-2	160(6.30)	267.8(10.54)	232(9.13)	55.6(2.19)	181(7.13)	56.7(2.23)	52.5(2.07)	44(1.73)	21.5(0.85)	117.6(4.63)	78(3.07)	43.5(1.71)	78(3.07)	32.5(1.28)	3.9
	LSLV0022H100-2	160(6.30)	267.8(10.54)	232(9.13)	55.6(2.19)	181(7.13)	56.7(2.23)	52.5(2.07)	44(1.73)	21.5(0.85)	117.6(4.63)	78(3.07)	43.5(1.71)	78(3.07)	32.5(1.28)	3.9
	LSLV0037H100-2	160(6.30)	267.8(10.54)	232(9.13)	55.6(2.19)	181(7.13)	56.7(2.23)	52.5(2.07)	44(1.73)	21.5(0.85)	117.6(4.63)	78(3.07)	43.5(1.71)	78(3.07)	32.5(1.28)	3.9
	LSLV0055H100-2	160(6.30)	267.8(10.54)	232(9.13)	55.6(2.19)	181(7.13)	56.7(2.23)	52.5(2.07)	44(1.73)	21.5(0.85)	117.6(4.63)	78(3.07)	43.5(1.71)	78(3.07)	32.5(1.28)	3.9
	LSLV0075H100-2	160(6.30)	267.8(10.54)	232(9.13)	55.6(2.19)	181(7.13)	56.7(2.23)	52.5(2.07)	44(1.73)	21.5(0.85)	117.6(4.63)	78(3.07)	43.5(1.71)	78(3.07)	32.5(1.28)	3.9
	LSLV0110H100-2	160(6.30)	267.8(10.54)	232(9.13)	55.6(2.19)	181(7.13)	56.7(2.23)	52.5(2.07)	44(1.73)	21.5(0.85)	117.6(4.63)	78(3.07)	43.5(1.71)	78(3.07)	32.5(1.28)	3.9
3-Phase 400V	LSLV0008H100-4	160(6.30)	267.8(10.54)	232(9.13)	55.6(2.19)	181(7.13)	56.7(2.23)	52.5(2.07)	44(1.73)	21.5(0.85)	117.6(4.63)	78(3.07)	43.5(1.71)	78(3.07)	32.5(1.28)	3.9
	LSLV0015H100-4	160(6.30)	267.8(10.54)	232(9.13)	55.6(2.19)	181(7.13)	56.7(2.23)	52.5(2.07)	44(1.73)	21.5(0.85)	117.6(4.63)	78(3.07)	43.5(1.71)	78(3.07)	32.5(1.28)	3.9
	LSLV0022H100-4	160(6.30)	267.8(10.54)	232(9.13)	55.6(2.19)	181(7.13)	56.7(2.23)	52.5(2.07)	44(1.73)	21.5(0.85)	117.6(4.63)	78(3.07)	43.5(1.71)	78(3.07)	32.5(1.28)	3.9
	LSLV0037H100-4	160(6.30)	267.8(10.54)	232(9.13)	55.6(2.19)	181(7.13)	56.7(2.23)	52.5(2.07)	44(1.73)	21.5(0.85)	117.6(4.63)	78(3.07)	43.5(1.71)	78(3.07)	32.5(1.28)	3.9
	LSLV0055H100-4	160(6.30)	267.8(10.54)	232(9.13)	55.6(2.19)	181(7.13)	56.7(2.23)	52.5(2.07)	44(1.73)	21.5(0.85)	117.6(4.63)	78(3.07)	43.5(1.71)	78(3.07)	32.5(1.28)	3.9
	LSLV0075H100-4	160(6.30)	267.8(10.54)	232(9.13)	55.6(2.19)	181(7.13)	56.7(2.23)	52.5(2.07)	44(1.73)	21.5(0.85)	117.6(4.63)	78(3.07)	43.5(1.71)	78(3.07)	32.5(1.28)	3.9
	LSLV0110H100-4	160(6.30)	267.8(10.54)	232(9.13)	55.6(2.19)	181(7.13)	56.7(2.23)	52.5(2.07)	44(1.73)	21.5(0.85)	117.6(4.63)	78(3.07)	43.5(1.71)	78(3.07)	32.5(1.28)	4.0

Dimensions

Conduit

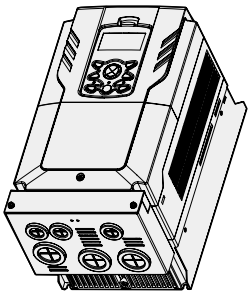

Drive + Conduit

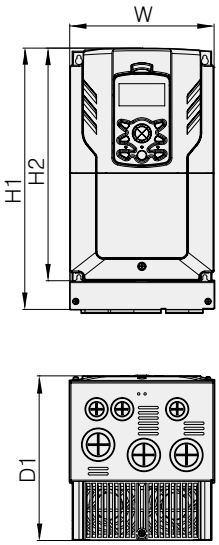

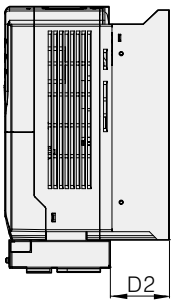

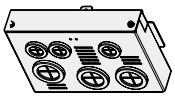

Conduit

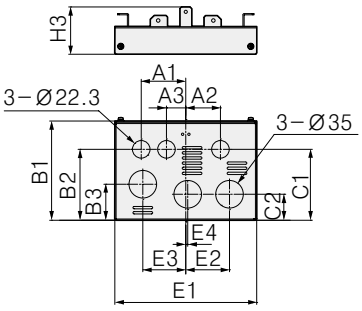

*Without rubber packing

Unit: mm(inches)

Product (Model)		W	H1	H2	H3	D1	D2	A1	A2	A3	B1	B2	B3	C1	C2	E1	E2	E3	E4	kg
3-Phase 200V	LSLV0150H100-2	180 (7.09)	325.8 (12.83)	290 (11.42)	60 (2.36)	205.3 (8.08)	73.7 (2.90)	56.5 (2.22)	44 (1.73)	24.5 (0.96)	125.9 (4.96)	90 (3.54)	45.7 (1.80)	90 (3.54)	33 (1.30)	180 (7.09)	55.5 (2.19)	54.5 (2.15)	2.5 (0.10)	5.2
3-Phase 400V	LSLV0150H100-4	180 (7.09)	325.8 (12.83)	290 (11.42)	60 (2.36)	205.3 (8.08)	73.7 (2.90)	56.5 (2.22)	44 (1.73)	24.5 (0.96)	125.9 (4.96)	90 (3.54)	45.7 (1.80)	90 (3.54)	33 (1.30)	180 (7.09)	55.5 (2.19)	54.5 (2.15)	2.5 (0.10)	5.2
	LSLV0185H100-4	180 (7.09)	325.8 (12.83)	290 (11.42)	60 (2.36)	205.3 (8.08)	73.7 (2.90)	56.5 (2.22)	44 (1.73)	24.5 (0.96)	125.9 (4.96)	90 (3.54)	45.7 (1.80)	90 (3.54)	33 (1.30)	180 (7.09)	55.5 (2.19)	54.5 (2.15)	2.5 (0.10)	5.4

AKSA OTOMASYON

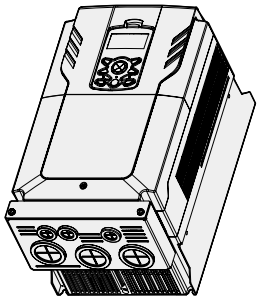

Drive + Conduit

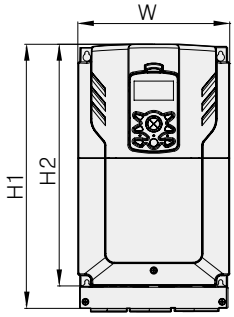

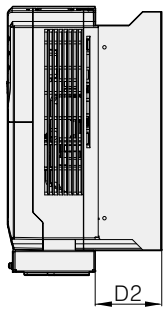

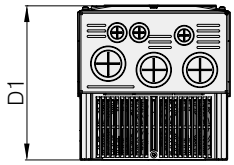

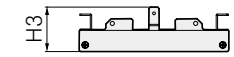

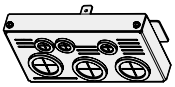

Conduit

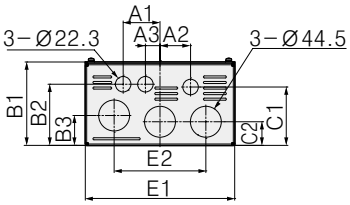

*Without rubber packing

Unit: mm(inches)

Product (Model)		W	H1	H2	H3	D1	D2	A1	A2	A3	B1	B2	B3	C1	C2	E1	E2	kg
3-Phase 200V	LSLV0185H100-2	220 (8.66)	382.5 (15.06)	350 (13.78)	64 (2.52)	223.2 (8.79)	96.4 (3.80)	53 (2.09)	44 (1.73)	21 (0.83)	120 (4.72)	88 (3.46)	43 (1.69)	84 (3.31)	34 (1.34)	215 (8.46)	132 (5.20)	5.2
3-Phase 400V	LSLV0220H100-4	220 (8.66)	382.5 (15.06)	350 (13.78)	64 (2.52)	223.2 (8.79)	96.4 (3.80)	53 (2.09)	44 (1.73)	21 (0.83)	120 (4.72)	88 (3.46)	43 (1.69)	84 (3.31)	34 (1.34)	215 (8.46)	132 (5.20)	5.2
	LSLV0300H100-4	220 (8.66)	382.5 (15.06)	350 (13.78)	64 (2.52)	223.2 (8.79)	96.4 (3.80)	53 (2.09)	44 (1.73)	21 (0.83)	120 (4.72)	88 (3.46)	43 (1.69)	84 (3.31)	34 (1.34)	215 (8.46)	132 (5.20)	5.4

Dimensions

Conduit

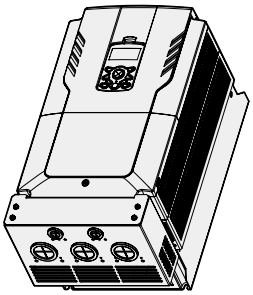

Drive + Conduit

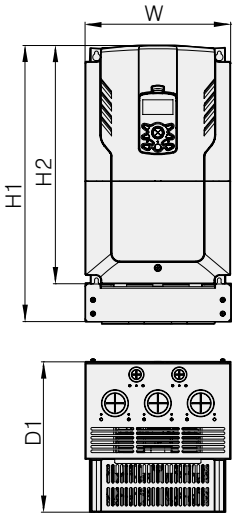

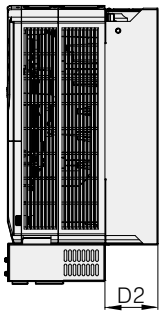

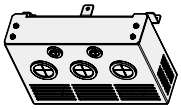

Conduit

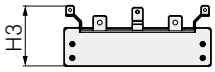

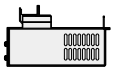

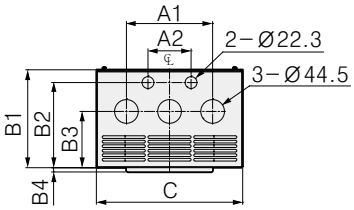

*Without rubber packing

Unit: mm(inches)

Product (Model)		W	H1	H2	H3	D1	D2	A1	A2	B1	B2	B3	B4	C	kg
3-Phase 400V	LSLV0370H100-4	275 (10.83)	521.5 (20.53)	450 (17.72)	112.5 (4.43)	284 (11.18)	100 (3.94)	162 (6.38)	81 (3.19)	184 (7.24)	160 (6.30)	105.8 (4.17)	8 (0.31)	275 (10.83)	28.7

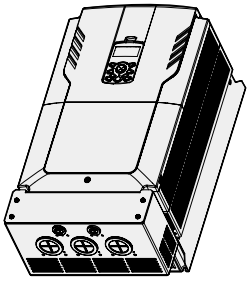

Drive + Conduit

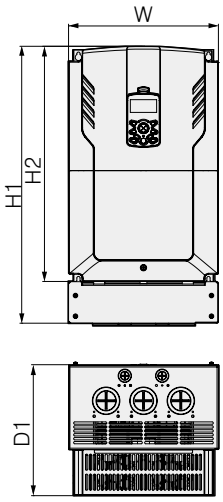

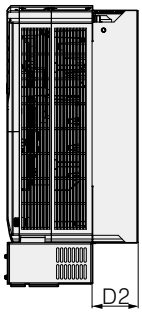

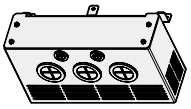

Conduit

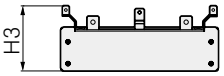

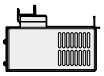

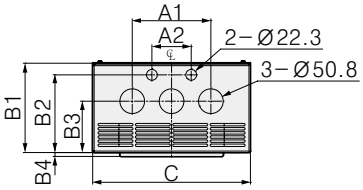

*Without rubber packing

Unit: mm(inches)

Product (Model)		W	H1	H2	H3	D1	D2	A1	A2	B1	B2	B3	B4	C	kg
3-Phase 400V	LSLV0450H100-4	325 (12.80)	600.5 (23.64)	510 (20.08)	134 (5.28)	284 (11.18)	100 (3.94)	162 (6.38)	81 (3.19)	184 (7.24)	160 (6.30)	105.8 (4.17)	8 (0.31)	325 (12.80)	38.4
	LSLV0550H100-4	325 (12.80)	600.5 (23.64)	510 (20.08)	134 (5.28)	284 (11.18)	100 (3.94)	162 (6.38)	81 (3.19)	184 (7.24)	160 (6.30)	105.8 (4.17)	8 (0.31)	325 (12.80)	38.4

Dimensions

Conduit

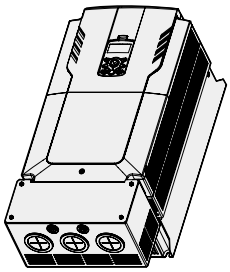

Drive + Conduit

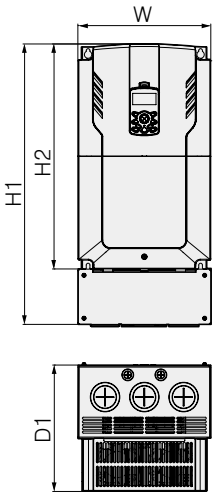

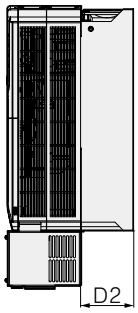

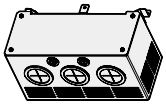

Conduit

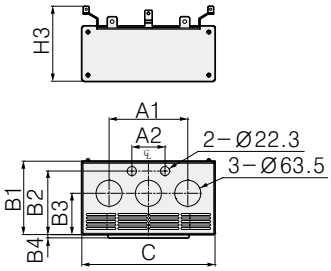

*Without rubber packing

Unit: mm(inches)

Product (Model)		W	H1	H2	H3	D1	D2	A1	A2	B1	B2	B3	B4	C	kg
3-Phase 400V	LSLV0750H100-4	325 (12.80)	685.5 (26.99)	550 (21.65)	183 (7.20)	309 (12.17)	130 (5.12)	192 (7.56)	81 (3.19)	179 (7.05)	155 (6.10)	100.75 (3.97)	8 (0.31)	325 (12.80)	47.2
	LSLV0900H100-4	325 (12.80)	685.5 (26.99)	550 (21.65)	183 (7.20)	309 (12.17)	130 (5.12)	192 (7.56)	81 (3.19)	179 (7.05)	155 (6.10)	100.75 (3.97)	8 (0.31)	325 (12.80)	47.2

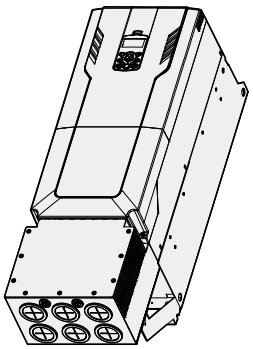

Drive + Conduit

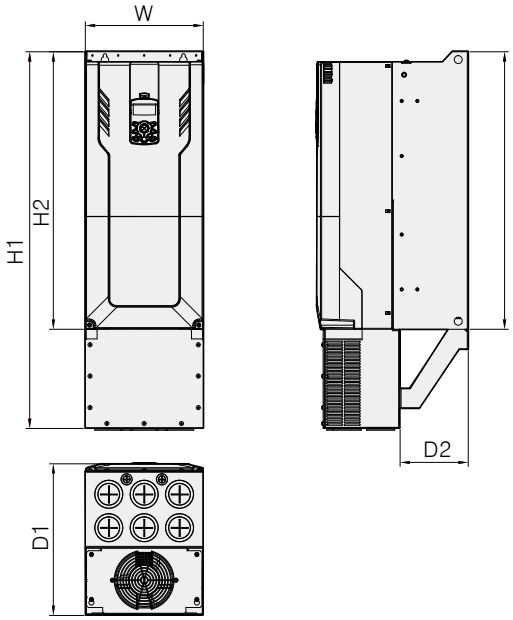

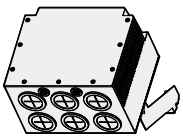

Conduit

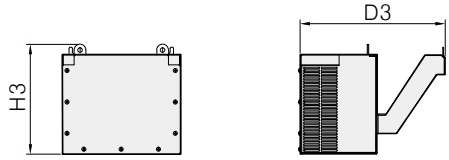

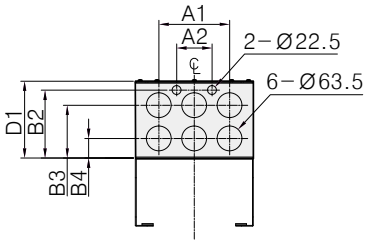

*Without rubber packing

Unit: mm(inches)

Product (Model)		W	H1	H2	H3	D1	D2	D3	A1	A2	B1	B2	B3	B4	kg
3-Phase 400V	LSLV1100H100-4	300 (11.81)	958.5 (37.74)	706 (27.80)	279.5 (11.00)	386 (15.20)	173 (6.81)	369 (14.53)	180 (7.09)	90 (3.54)	196 (7.72)	172.25 (6.78)	134.75 (5.31)	49.75 (1.96)	62.31
	LSLV1320H100-4	300 (11.81)	958.5 (37.74)	706 (27.80)	279.5 (11.00)	386 (15.20)	173 (6.81)	369 (14.53)	180 (7.09)	90 (3.54)	196 (7.72)	172.25 (6.78)	134.75 (5.31)	49.75 (1.96)	62.31

Dimensions

Conduit

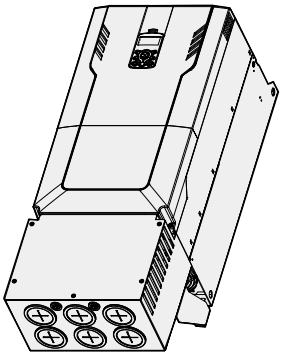

Drive + Conduit

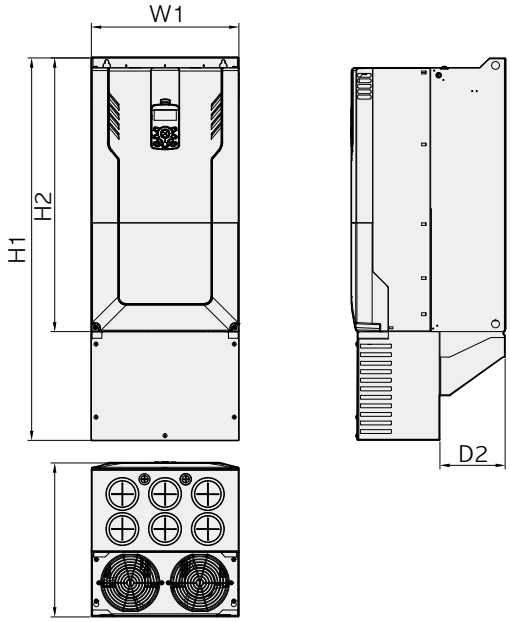

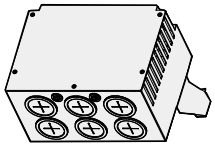

Conduit

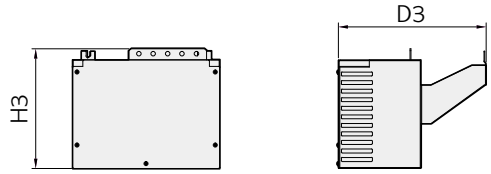

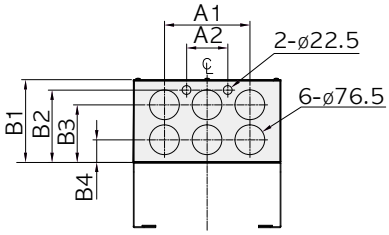

*Without rubber packing

Unit: mm(inches)

Product (Model)		W	H1	H2	H3	D1	D2	D3	A1	A2	B1	B2	B3	B4	kg
3-Phase 400V	LSLV1600H100-4	380 (14.96)	985 (38.78)	705 (27.76)	308 (12.13)	396 (15.59)	168 (6.61)	381 (15.00)	220 (8.66)	106 (4.17)	213 (8.39)	186 (7.32)	148 (5.83)	58 (2.28)	81.24
	LSLV1850H100-4	380 (14.96)	985 (38.78)	705 (27.76)	308 (12.13)	396 (15.59)	168 (6.61)	381 (15.00)	220 (8.66)	106 (4.17)	213 (8.39)	186 (7.32)	148 (5.83)	58 (2.28)	81.24

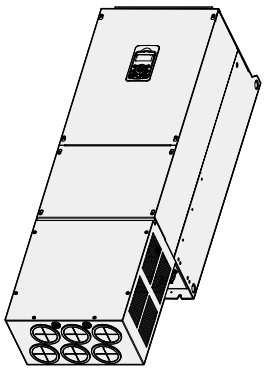

Drive + Conduit

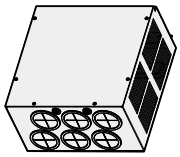

Conduit

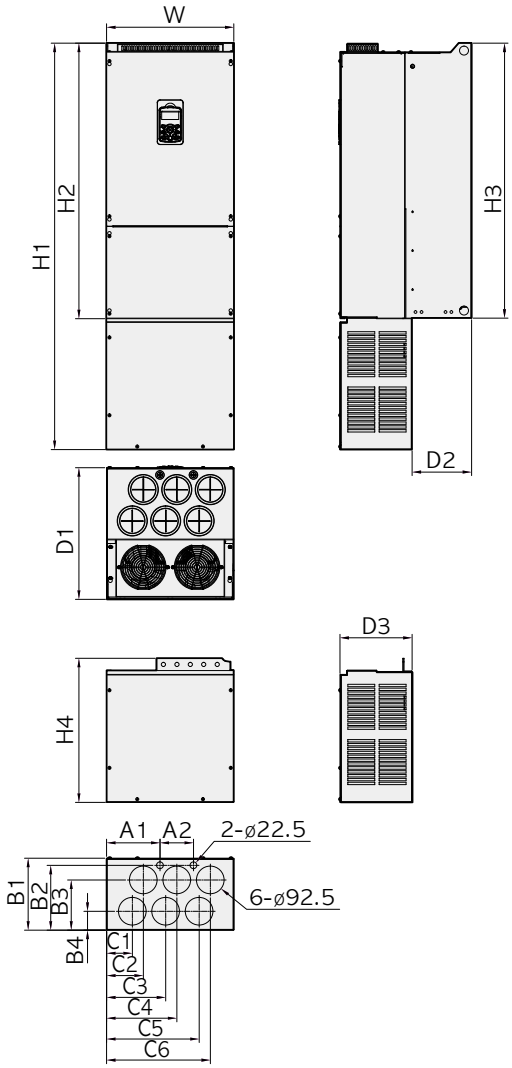

*Without rubber packing

Unit: mm(inches)

Product (Model)		W	H1	H2	H3	H4	D1	D2	D3	A1	A2
3-Phase 400V	LSLV2200H100-4	426 (16.77)	1360.3 (53.56)	922.3 (36.31)	920 (36.22)	482 (18.98)	440 (17.32)	199 (7.83)	241 (9.49)	179 (7.05)	112 (4.41)
	LSLV2500H100-4	426 (16.77)	1360.3 (53.56)	922.3 (36.31)	920 (36.22)	482 (18.98)	440 (17.32)	199 (7.83)	241 (9.49)	179 (7.05)	112 (4.41)

Product (Model)		B1	B2	B3	B4	C1	C2	C3	C4	C5	C6	kg
3-Phase 400V	LSLV2200H100-4	241 (9.49)	217 (8.54)	168 (6.61)	63 (2.48)	86 (3.39)	123 (4.84)	198 (7.80)	235 (9.25)	310 (12.20)	347 (13.66)	130.54
	LSLV2500H100-4	241 (9.49)	217 (8.54)	168 (6.61)	63 (2.48)	86 (3.39)	123 (4.84)	198 (7.80)	235 (9.25)	310 (12.20)	347 (13.66)	130.54

Dimensions

Conduit

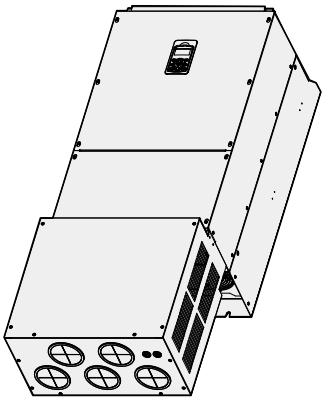

Drive + Conduit

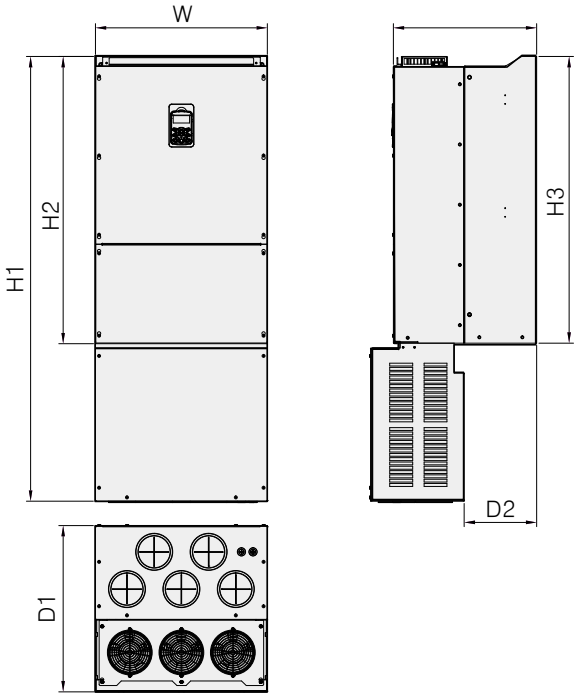

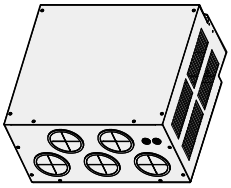

Conduit

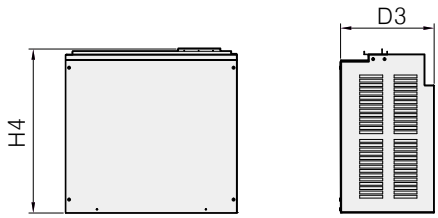

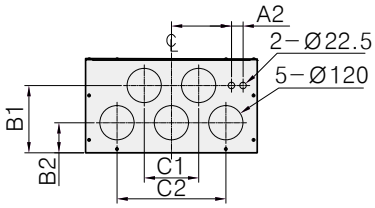

*Without rubber packing

Unit: mm(inches)

Product (Model)		W	H1	H2	H3	H4	D1	D2	D3	A1	A2	B1	B2	C1	C2	kg
3-Phase 400V	LSLV3150H100-4	600 (23.62)	1552 (61.10)	1002 (39.45)	1000 (39.37)	572.5 (22.54)	580 (22.83)	253 (9.96)	327 (12.87)	210 (8.27)	40 (1.57)	235 (9.25)	105 (4.13)	190 (7.48)	380 (14.96)	205.72
	LSLV3550H100-4	600 (23.62)	1552 (61.10)	1002 (39.45)	1000 (39.37)	572.5 (22.54)	580 (22.83)	253 (9.96)	327 (12.87)	210 (8.27)	40 (1.57)	235 (9.25)	105 (4.13)	190 (7.48)	380 (14.96)	205.72
	LSLV4000H100-4	600 (23.62)	1552 (61.10)	1002 (39.45)	1000 (39.37)	572.5 (22.54)	580 (22.83)	253 (9.96)	327 (12.87)	210 (8.27)	40 (1.57)	235 (9.25)	105 (4.13)	190 (7.48)	380 (14.96)	205.72

AKSA OTOMASYON

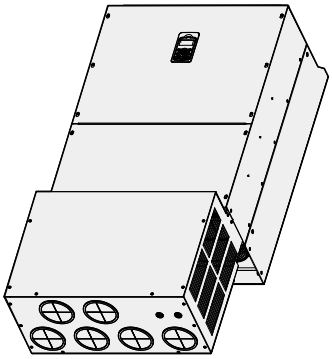

Drive + Conduit

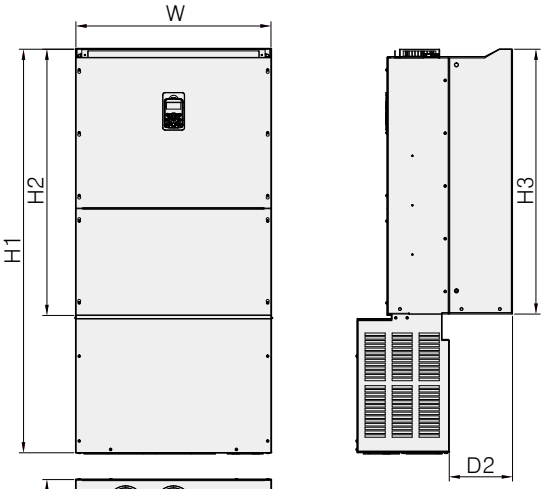

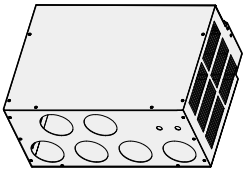

Conduit

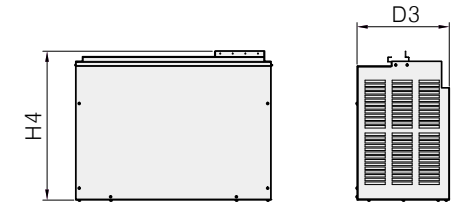

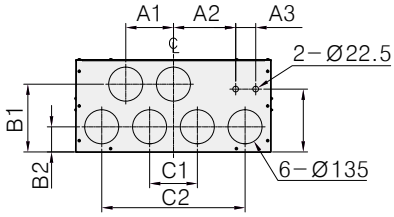

*Without rubber packing

Unit: mm(inches)

Product (Model)		W	H1	H2	H3	H4	D1	D2	D3	A1	A2	A3	B1	B2	B3	C1	C2	kg
3-Phase 400V	LSLV5000H100-4	776 (30.55)	1606 (63.23)	1059.5 (41.71)	1054 (41.50)	592.4 (23.32)	618.5 (24.35)	251.5 (9.90)	367 (14.45)	190 (7.48)	247.5 (9.74)	80 (3.15)	270 (10.63)	100 (3.94)	250 (9.84)	190 (7.48)	570 (22.44)	290.91

DB Resistance

Dynamic Braking Resistors Specification

Product (kW)		Torque 100%			Torque 150%		
		Resistor (Ω)	Wattage [W] (%ED=5%)	Wattage [W] (%ED=10%)	Resistor (Ω)	Wattage [W] (%ED=5%)	Wattage [W] (%ED=10%)
3-Phase 200V	0.75	200	100	200	150	150	300
	1.5	100	200	400	60	300	600
	2.2	60	300	600	50	400	800
	3.7	40	500	1000	33	600	1200
	5.5	33	600	1200	20	800	1600
	7.5	20	800	1600	15	1200	2400
	11	15	1200	2400	10	2400	4800
	15	10	2400	4800	8	2400	4800
	18.5	8	2400	4800	6	2600	5200
3-Phase 400V	0.75	900	100	200	600	150	300
	1.5	450	200	400	300	300	600
	2.2	300	300	600	200	400	800
	3.7	200	400	800	130	600	1200
	5.5	120	700	1400	85	1000	2000
	7.5	90	1000	2000	60	1200	2400
	11	60	1200	2400	40	2000	4000
	15	45	2000	4000	32	2400	4800
	18.5	35	2400	4800	20	3600	7200
	22	30	2400	4800	20	3600	7200
	30	20	3600	7200	16	5000	10000
	37	16.9	3.2	6.4	-	-	-
		16.9	3.2	6.4	12	5	10
		16.9	3.2	6.4	12	5	10
	45	11.4	4.8	9.6	-	-	-
		11.4	4.8	9.6	10	6.4	12.8
		11.4	4.8	9.6	10	6.4	12.8
	55	11.4	4.8	9.6	-	-	-
		11.4	4.8	9.6	8.4	7.2	14.4
		11.4	4.8	9.6	8.4	7.2	14.4
	75	8.4	6.4	12.8	-	-	-
		8.4	6.4	12.8	6	10	20
		8.4	6.4	12.8	6	10	20
	90	6	10	20	5	13	26
	110	5	13	26	4	16	32
	132	4	16	32	3.4	20	40
	160	3.4	20	40	2.8	24	48
	185	2.8	24	48	2.4	26	52
	220	2.4	26	52	2	30	60
	250	132kW DB Unit and Resistor * 2 Set (Parallel)					
	315	160kW DB Unit and Resistor * 2 Set (Parallel)					
	355	185kW DB Unit and Resistor * 2 Set (Parallel)					
	400	220kW DB Unit and Resistor * 2 Set (Parallel)					
	500	185kW DB Unit and Resistor * 3 Set (Parallel)					

It is not necessary to use option type dynamic braking unit for H100 0.75~18.5kW(200V) and 0.75~30kW(400V) because basically the dynamic braking unit is built in.
If the values of ED (%) are doubled, the rated capacity of braking resistance should be doubled for calculation

AKSA OTOMASYON

Peripheral Devices

Voltage	Capacity (kW)	Circuit Breaker(MCCB)				Leakage Breaker(ELCB)		Magnetic Contactor(MC)	
		Model	Rated Current(A)	Model	Rated Current(A)	Model	Rated Current(A)	Model	Rated Current(A)
3-Phase 200V	0.75	ABS33c	15	UTE100	15	EBS33c	15	MC-9a	11
	1.5		15		15		15	MC-18a	18
	2.2		30		15		30	MC-32a	32
	3.7		30		15		30	MC-32a	32
	5.5	ABS53c	50	UTE100	50	EBS53c	50	MC-50a	55
	7.5	ABS63c	60	UTE100	60	EBS63c	60	MC-65a	65
	11	ABS103c	100	UTE100	100	EBS103c	100	MC-85a	85
	15		100	UTE100	100		100	MC-130a	130
	18.5	ABS203c	150	UTE150	150	EBS203c	200	MC-150a	150
3-Phase 400V	0.75	ABS33c	10	UTE100	15	EBS33c	10	MC-6a	9
	1.5		10		15		10	MC-6a	9
	2.2		15		15		15	MC-9a	11
	3.7		15		15		15	MC-12a	13
	5.5	ABS53c	50	UTE100	50	EBS33c	30	MC-22b	22
	7.5		50	UTE100	50		30	MC-32a	32
	11	ABS63c	60	UTE100	60	EBS53c	50	MC-50a	50
	15	ABS63c	80	UTE100	80	EBS63c	60	MC-65a	65
	18.5	ABS103c	100	UTE100	100	EBS103c	100	MC-85a	85
	22	ABS103c	125	UTE150	125		125	MC-100a	105
	30	ABS103c	125	UTE150	125		125	MC-130a	130
	37	ABS203c	175	UTE250	175	EBS203c	200	MC-150a	150
	45	ABS203c	225	UTE250	225		225	MC-185a	185
	55	ABS203c	250	UTE250	250		250	MC-185a	185
	75	ABS403c	300	UTE400	300	EBS403c	300	MC-225a	225
	90	ABS403c	350	UTE400	350		350	MC-330a	330
3-Phase 400V	110	ABS603c	500	UTS600	500	EBS603c	500	MC-400a	400
	132	ABS603c	600		600		630		
	160	ABS603c	630		600		630	MC-630a	630
	185	ABS803c	800	UTS800	800	EBS803c	800		
	220	ABS803c	800		800		800	MC-800a	800
	250	ABS1003c	1000		1000	EBS1003b	1000		
	315	ABS1203b	1200	UTS1200	1200		1200	MC-1200a	1200
	355	ABS1203b	1200		1200	EBS1203b	1200		
	400	-	1600	-	1600	-	-	-	-
	500	-	1600	-	1600	-	-	-	-
3-Phase 500V	110	ABS603c	500	UTS600	500	EBS603c	500	MC-400a	400
	132	ABS603c	600		600	EBS603c	630	MC-400a	400
	160	ABS603c	630		600	EBS603c	630	MC-630a	630
	185	ABS803c	800	UTS800	800	EBS803c	800	MC-630a	630
	220	ABS803c	800		800	EBS803c	800	MC-800a	800
	250	ABS803c	800		800	EBS803c	800	MC-800a	800
	315	ABS1203b	1200	UTS1200	1200	EBS1203c	1200	MC-1200a	1200
	355	ABS1203b	1200		1200	EBS1203c	1200	MC-1200a	1200
	400	-	1600	-	1600	-	-	-	-
	500	-	1600	-	1600	-	-	-	-

In accordance with the IEC 60439-1 regulation, symmetrical high current at the maximumrated voltage of the product.
Fuse/Reactor Specifications short-circuit current of the code applicable to the power input part is 100kA. H100 Drive is designed to endure rated 100kA

DB Resistance

Fuse/Reactor Specifications

Producto (kW)		AC Input Fuse		AC Reactor		DC Reactor	
		Current (A)	Voltage (V)	Inductance (mH)	Current (A)	Inductance (mH)	Current (A)
3-Phase 200V	0.75	10	600	2.02	5	4.04	5
	1.5	10		1.26	8	2.53	8
	2.2	15		0.78	12	1.68	12
	3.7	20		0.59	16	1.26	16
	5.5	50		0.43	24	0.93	25
	7.5	63		0.31	33	0.73	32
	11	80		0.22	46	0.53	50
	15	100		0.16	62	0.32	62
	18.5	125		0.13	77	0.29	80
3-Phase 400V	0.75	10	600	8.09	2.5	16.17	3
	1.5	10		5.05	4	10.11	4
	2.2	15		3.37	6	6.74	6
	3.7	20		2.25	9	5.05	8
	5.5	32		1.56	13	3.56	13
	7.5	35		1.16	17	2.53	18
	11	50		0.76	27	1.64	26
	15	63		0.61	33	1.42	33
	18.5	70		0.48	43	0.98	42
	22	100		0.40	51	0.88	50
	30	125		0.29	69	0.59	68
	37			0.29	69	Built In	
	45	160		0.24	85		
	55	200		0.20	100		
	75	250		0.15	134		
	90	350		0.13	160		
	110	350		0.1	217		
	132	400		0.08	257		
	160	450		0.07	318		
	185	550		0.06	362		
	220	630		0.05	423		
	250	700		0.05	474		
	315	800		0.04	604		
	355	1000		0.03	673		
	400	1100		0.03	759		
	500	1250		0.03	948		

AKSA OTOMASYON

Dynamic Braking Unit

UL form	Type	Voltage	Capacity of Applied motor	Braking Unit	Terminal Arrangement & Dimensions
UL Type	Type A (Resistance of DB Resistor refer to the table of "11.7.6 DB Resistors")	200V	30 ~ 37 kW	SV370DBU-2U	Refer to the appearance of Group 1.
			45 ~ 55 kW	SV550DBU-2U	
			75 kW	SV370DBU-2U, 2Set	
		200V	30 ~ 37 kW	SV370DBU-4U	
			45 ~ 55 kW	SV550DBU-4U	
			75 kW	SV750DBU-4U	
			90 kW	SV550DBU-4U, 2Set	
			110~132 kW	SV750DBU-4U, 2Set	
			160 kW	SV750DBU-4U, 3Set	
Non UL Type	Type B (Resistance of DB Resistor refer to the manual of DB Unit)	200V	30 ~ 37 kW	SV037DBH-2	Refer to the appearance of Group 2.
		400V	30 ~ 37 kW	SV037DBH-4	
			45 ~ 55 kW, 75 kW	SV075DBH-4	
				SV075DB-4	Refer to the appearance of Group 3.
			185~220 kW	SV2200DB-4 Note1)	Refer to the appearance of Group 4.
			280~375 kW	SV2200DB-4, 2Set	
	Type C (Resistance of DB Resistor refer to the manual of DB Unit)	200V	30 ~ 37 kW	LSLV0370DBU-2LN	Refer to the appearance of Group 5.
				LSLV0370DBU-2HN	Refer to the appearance of Group 6.
			45 ~ 55 kW, 75 kW	LSLV0750DBU-2LN	Refer to the appearance of Group 5.
				LSLV0750DBU-2HN	Refer to the appearance of Group 6.
		400V	30 ~ 37 kW	LSLV0370DBU-4LN	Refer to the appearance of Group 5.
				LSLV0370DBU-4HN	Refer to the appearance of Group 6.
			45 ~ 55 kW, 75 kW	LSLV0750DBU-4LN	efer to the appearance of Group 5.
			90 kW	LSLV0900DBU-4HN	Refer to the appearance of Group 6.
			110~132 kW	LSLV1320DBU-4HN	
			160 kW	LSLV1600DBU-4HN	
			185~220 kW	LSLV2200DBU-4HN	
			280~375 kW	LSLV2200DBU-4HN, 2Set	
			400~500 kW	LSLV2200DBU-4HN, 3Set	

- It is not necessary to use option type dynamic braking unit for H100 0.75~18.5kW(200V) and 0.75~30kW(400V) because basically the dynamic braking unit is built in.
- You must refer to dynamic braking unit manual for usage recommended dynamic braking unit in the table above due to changeable table.
- Resistance/watt/breaking torque/%ED of DB Resistor for Type A DBU nit refer to the table of "11.7.6 DB Resistors"

Terminal Arrangement

Group 1 :

P	N	G	B1	B2

Group 2 :

G	N	B2	P/B1

Terminal	Functions
G	Ground Terminal
B2	Terminal for connection with B2 of DBU
B1	Terminal for connection with B1 of DBU
N	Terminal for connection with N of Inverter
P	Terminal for connection with P1 of Inverter

Group 3 :

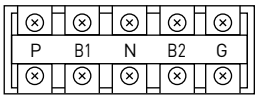

75kW DB Terminal

Group 4 :

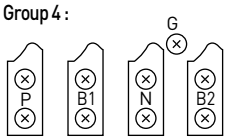

220kW DB Terminal

Terminal	Functions
G	Ground Terminal
B2	Terminal for connection with B2 of DBU
B1	Terminal for connection with B1 of DBU
N	Terminal for connection with N of Inverter
P	Terminal for connection with P of Inverter

Group 5 :

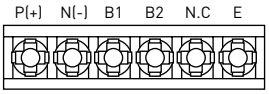

Terminal	Functions
P(+)	Terminal for connection with P of Inverter
N(-)	Terminal for connection with N of Inverter
B1	Terminal for connection with B1 of DBU
B2	Terminal for connection with B2 of DBU
N.C	Unused
E	Ground Terminal

Group 6 :

A Frame(37kW, 75kW-4)

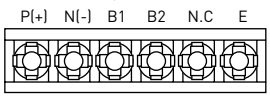

B/C Frame(75kW-2, 90~500kW)

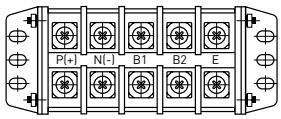

Terminal	Functions
P(+)	Terminal for connection with P of Inverter
N(-)	Terminal for connection with N of Inverter
B1	Terminal for connection with B1 of DBU
B2	Terminal for connection with B2 of DBU
E	Unused

Dynamic Braking Unit

Dynamic Breaking (DB) Unit & DB Resistor Basic Wiring

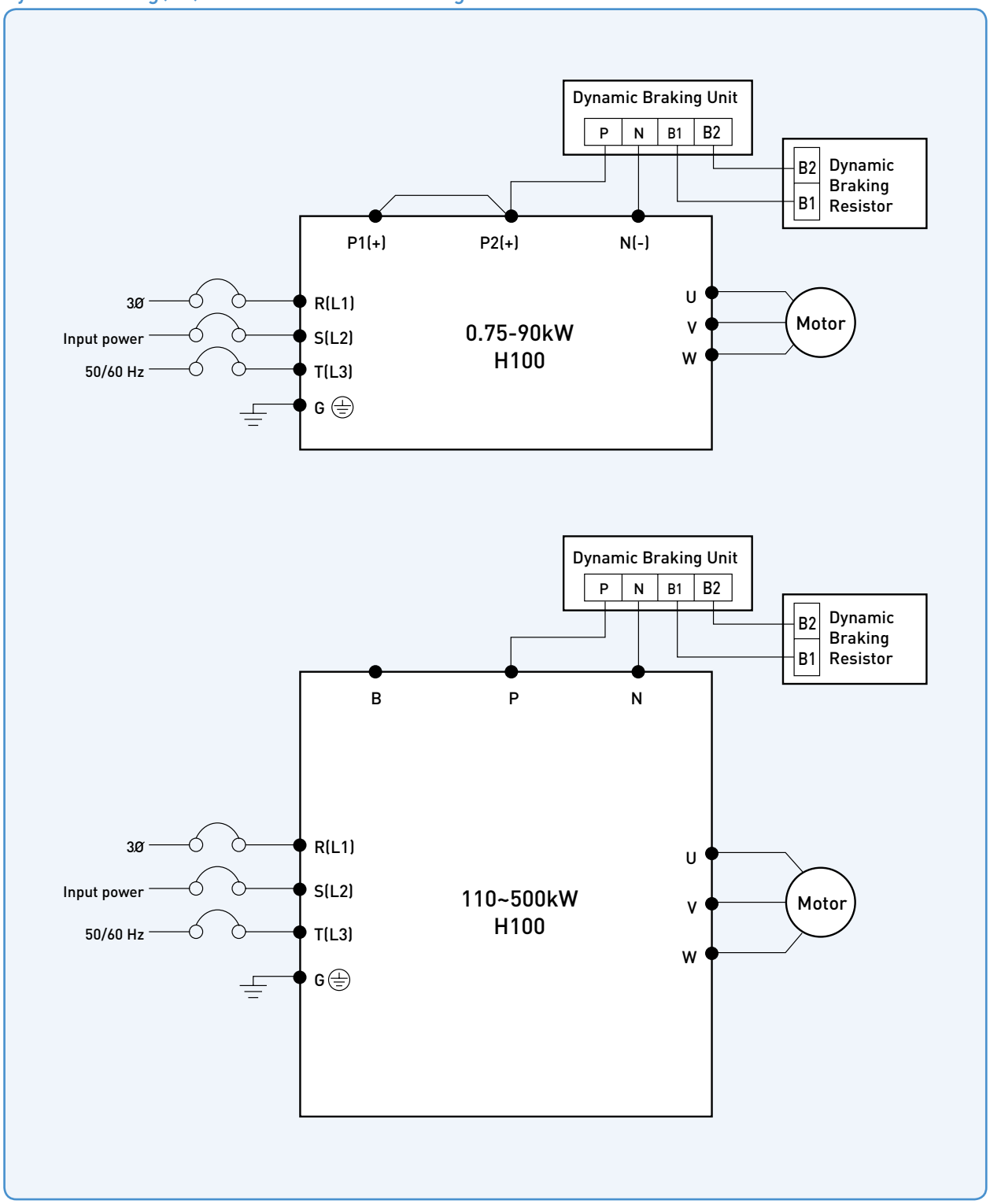

Bornes de la DBU	Description
B1, B2	Wire correctly referring to wiring diagram. DB Resistors connect with B1, B2 of DB Unit.

Memo

Memo

FUTURING SMART ENERGY

We open up a brighter future through
efficient and convenient energy solutions.

AKSA OTOMASYON

Safety Instructions

- For your safety, please read user's manual thoroughly before operating.
- Contact the nearest authorized service facility for examination, repair, or adjustment.
- Please contact qualified service technician when you need maintenance.
  Do not disassemble or repair by yourself!
- Any maintenance and inspection shall be performed by the personnel having expertise concerned.

LS IS

www.lsis.com

■ Head Quarter

LS-ro 127(Hogye-dong) Dongan-gu, Anyang-si, Gyeonggi-Do, 14119, Korea
Tel: 82-2-2034-4620 mswoo@lsis.com
Tel: 82-2-2034-4907 hjchoid@lsis.com

■ Overseas Subsidiaries

•LSIS(Dalian) Co., Ltd. (Dalian, China)
Tel: 86-411-8730-7510 Fax: 86-411-8730-7560 E-Mail: dskim@lsis.com

•LSIS(Wuxi) Co., Ltd. (Wuxi, China)
Tel: 86-510-8534-6666-8005 Fax: 86-510-8534-4078 E-Mail: sojin@lsis.com

•LS VINA Industrial Systems Co., Ltd. (Hanoi, Vietnam)
Tel: 84-4-6275-8055 Fax: 84-4-3882-0220 E-Mail: hjchoid@lsis.com

•LSIS Middle East FZE (Dubai, U.A.E.)
Tel: 971-4-886-5360 Fax: 971-4-886-5361 E-Mail: shunlee@lsis.com

•LSIS Europe B.V. (Amsterdam, Netherlands)
Tel: 31-20-654-1420 Fax: 31-20-654-1429 E-Mail: europartner@lsis.com

•LSIS Japan Co., Ltd. (Tokyo, Japan)
Tel: 81-3-6268-8241 Fax: 81-3-6268-8240 E-Mail: jschuna@lsis.com

•LSIS USA Inc. (Chicago, U.S.A.)
Tel: 1-800-891-2941 Fax: 1-847-383-6543 E-Mail: sales.us@lsis.com

■ Overseas Branches

•LSIS Shanghai Office (China)
Tel: 86-21-5237-9977(609) Fax: 86-21-5237-7189 E-Mail: ygeo@lsis.com

•LSIS Beijing Office (China)
Tel: 86-10-5761-3127 Fax: 86-10-5761-3128 E-Mail: htroh@lsis.com

•LSIS Guangzhou Office (China)
Tel: 86-20-8326-6784 Fax: 86-20-8326-6287 E-Mail: sojhtroh@lsis.com

•LSIS Qingdao Office (China)
Tel: 86-532-8501-6058 Fax: 86-532-8501-6057 E-Mail: htroh@lsis.com

•LSIS Chengdu Office (China)
Tel: 86-28-8670-3200 Fax: 86-28-8670-3203 E-Mail: yangcf@lsis.com

•LSIS ShenYang Office (China)
Tel:86-24-2321-9050 Fax: 86-24-8386-7210 E-Mail: yangcf@lsis.com

•LSIS Jinan Office (China)
Tel: 86-531-8699-7826 Fax: 86-531-8697-7628 E-Mail: yangcf@lsis.com

•LSIS Co., Ltd. Tokyo Office (Japan)
Tel: 81-3-6268-8241 Fax: 81-3-6268-8240 E-Mail: jschuna@lsis.com

•LSIS Co., Ltd. Rep. Office (Vietnam)
Tel: 84-8-3823-7890 E-Mail: sjbaik@lsis.com

•LSIS Moscow Office (Russia)
Tel: 7-499 682 6130 E-Mail: info@lsis-ru.com

•LSIS Jakarta Office (Indonesia)
Tel: 62-21-293-7614 E-Mail: dioh@lsis.com

2017. 10

Specifications in this catalog are subject to change without notice due to continuous product development and improvement.

© 2017.08 LSIS Co.,Ltd. All rights reserved. / (11) 2017. 10 Human Power