Green Innovators of Innovation

www.lsis.com

Variable Frequency Drive iC5

0.4-2.2kW 1 Phase 200-230Volts

AKSA OTOMASYON

LS IS

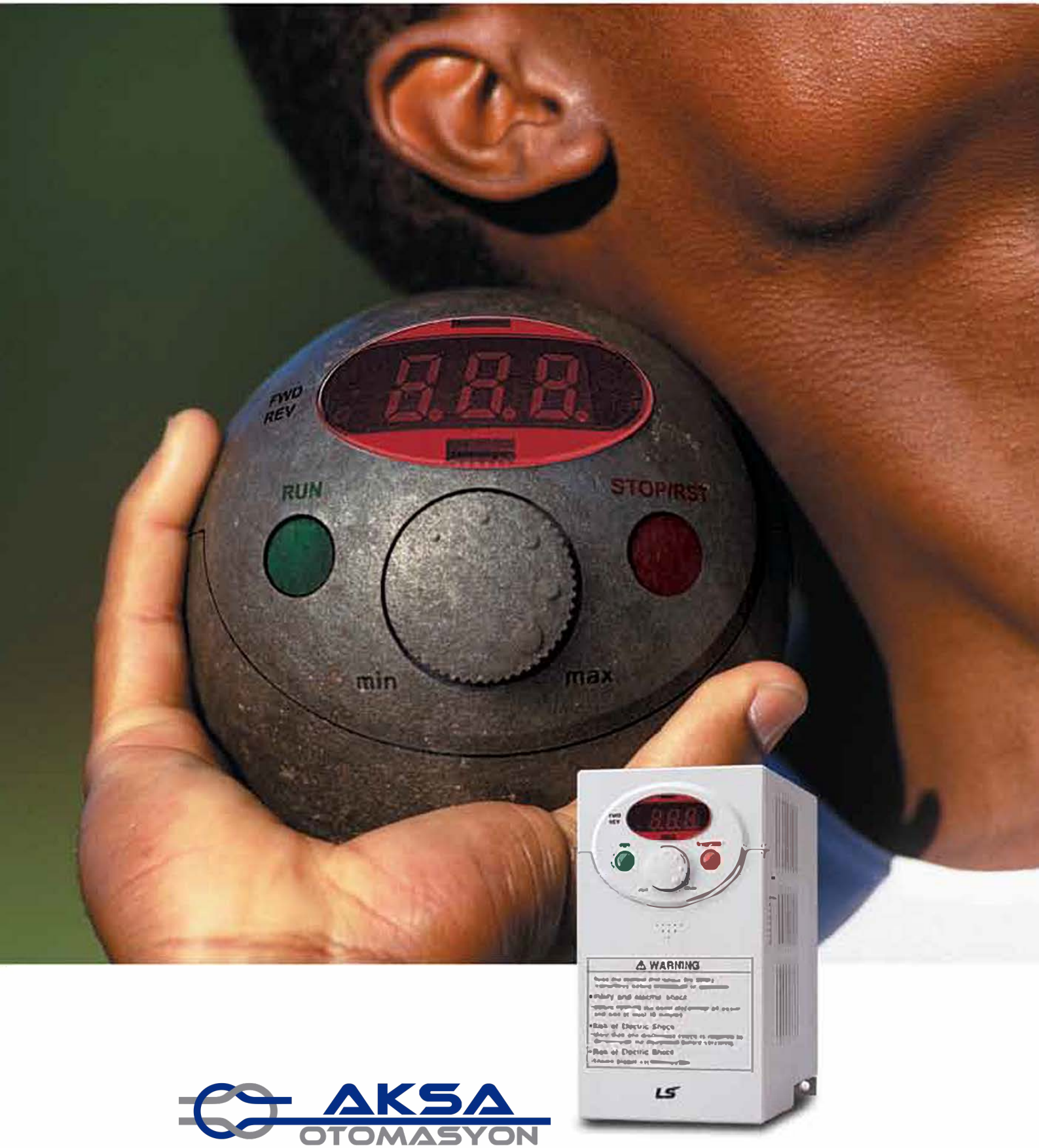

AKSA
OTOMASYON

AKSA OTOMASYON

Starvert iC5

" Global standard iC5, serves a wide variety of applications to meet the majority of user needs. "

- Modbus communication (Option)
- PID control
- Sensorless vector control
- Motor parameter auto tuning

CE c UL us ISO9001 ISO14000

04 Features
06 Specifications
08 Terminal configuration
09 Program Parameters
16 Checking & Troubleshooting
Models 05
Wiring 07
Keypad 08
Program parameters descriptions 11
Tips on Installation 18

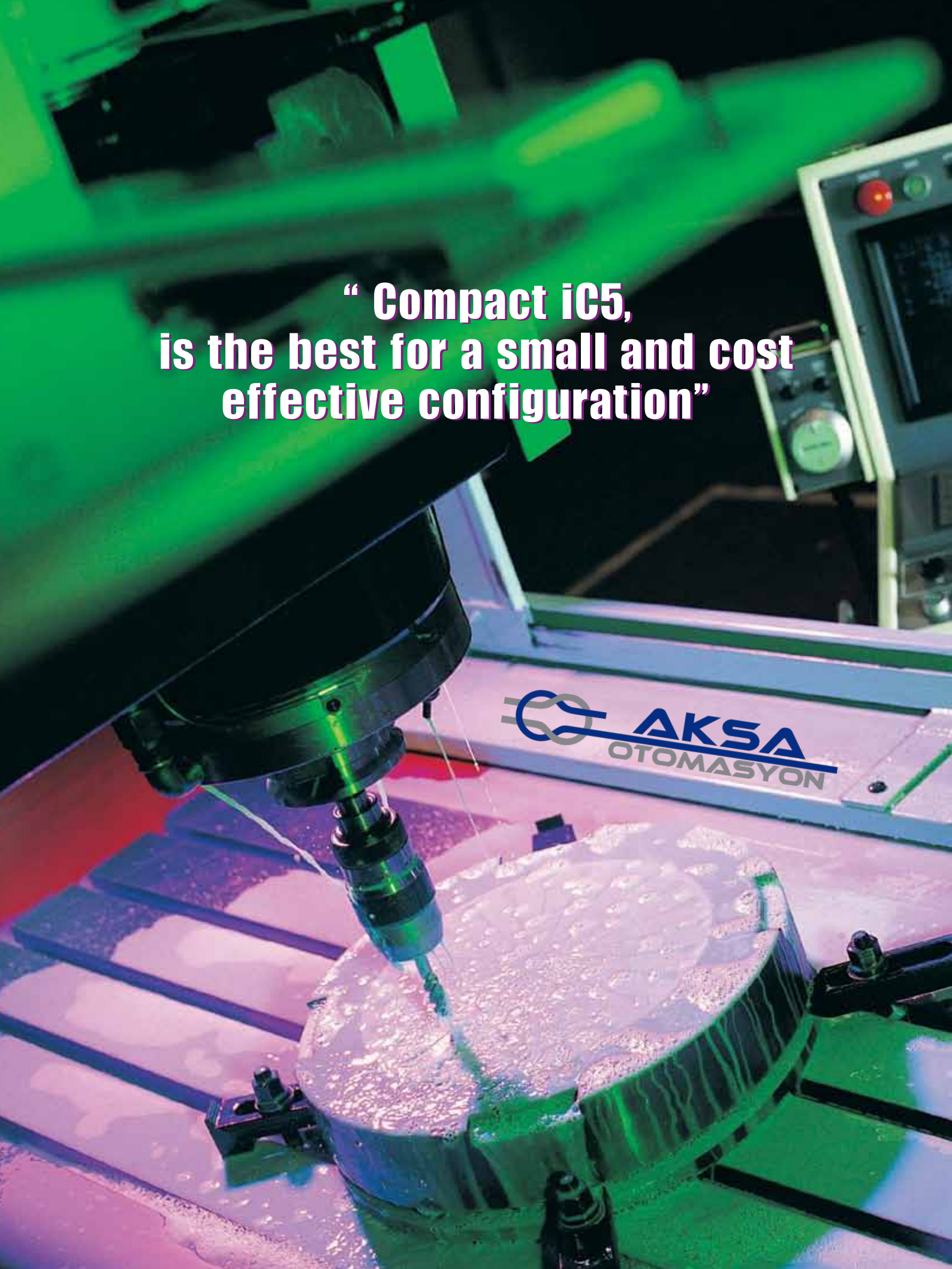
" Compact iC5,
is the best for a small and cost
effective configuration"
AKSA
OTOMASYON

LS Drive iC5 Series

Sensorless vector control

The iC5 adopts sensorless vector control algorithm, and it improves not only the torque control characteristics, but the speed controlability in an uncertain condition caused by the load variation as well.

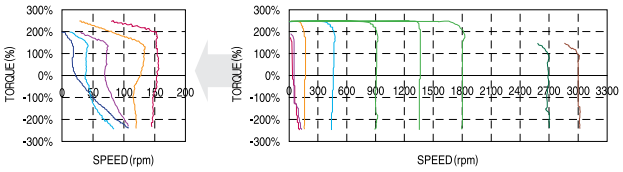

Auto tuning

The auto tuning algorithm in the iC5 sets the motor factors automatically that brings the traditional commissioning difficulties mainly in low speed by the load variation and the low torque generation to a settlement.

• Difficulty of measuring the motor constant • Input errors by an user
• Low torque in low speed • Low speed by the load variation • Setup by an expert

characteristic

• Setup by an user • mproving torque in low speed
• Auto tuning of the motor characteristics • Optimized motor control

PNP and NPN switchable dual signals

The iC5 provides PNP and NPN signals for outside controllers.
It works with 24Vdc regardless of the type of PLC or control signals.

Communication interface, ModBus-RTU

The iC5 provides the most popular communication interface, ModBus-RTU for remote control by PLC or other devices.

Programmable PID process control

PID process control is used in iC5 to make speed corrections quickly with a minimal amount of overshoot and oscillation for the control of flow, temperature, pressure and etc.

Models

Applicable motor	220V, single phase
0.4kW (0.5HP)	SV004iC5-1
0.75kW (1HP)	SV008iC5-1
1.5kW (2HP)	SV015iC5-1
2.2kW (3HP)	SV022iC5-1

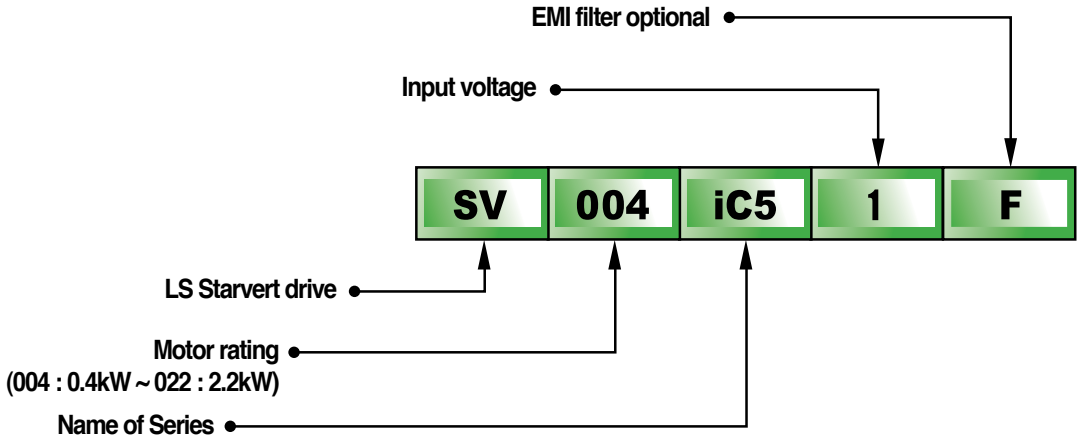

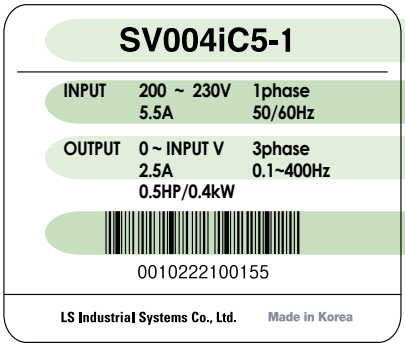

Model no. of LS Starvert drive

Input : voltage, current, frequency and phase

Output : voltage, current, capacity(FLA), frequency and phase

Barcode and Serial no.

AKSA OTOMASYON

Specifications

Specifications (200-230V class)

Model		SV004iC5-1	SV008iC5-1	SV015iC5-1	SV022iC5-1
Motor rating	[HP]	0.5	1	2	3
	[kW]	0.4	0.75	1.5	2.2
Output ratings	Capacity[kVA]	0.95	1.9	3	4.5
	FLA[A]	2.5	5	8	12
	Voltage	Three phase, 200 to 230V			
	Frequency	0 to 400Hz			
Input ratings	Voltage	Single phase, 200 to 230V (±10%)			
	Frequency	50 to 60Hz (±5%)			

Control

Control method	V/F control, Sensorless vector control
Frequency setting resolution	• Digital reference : 0.01Hz • Analog reference : 0.06Hz/60Hz
Frequency setting accuracy	• Digital : 0.01% of Maximum output frequency • Analog : 0.1% of Maximum output frequency
V/F ratio	Linear, Squar pattern, User V/F
Overload capacity	1min. at 150%, 30sec. at 200% (with inverse characteristic)
Torque boost	Manual(0 to 15% adjustable), Auto

Operation

Input signal	Operator control	Keypad / Terminal / Communications
	Frequency setting	• Analog : 0~10V/4~20mA • Digital : Keypad • Communication : RS485
	Start signal	Forward / Reverse
	Multi-step	Setting up to 8 speeds (use multi-function terminal)
	Multi-step accel /decel time	0.1~6000 sec. Max. 8 types available by multi-function terminal Selectable accel/decel patterns : Linear, U and S
	Emergency stop	Interrupting the output of the drive
	Jog	Jog operation
	Fault reset	Reset the fault when protective function is active
Output signal	Operation status & Fault output	Frequency detection, Overload alarm, Stalling, Overvoltage, Undervoltage, Drive overheating, Run, Stop, Constant speed, Speed searching, Fault output (Relay and Open collector output)
	Indicator	Choose one from output frequency, current, voltage and DC voltage.(Output voltage : 0~10V)
Operation function		DC braking, Frequency limit, Frequency jump, Second function, Slip compensation, Reversing prevention, Auto restart, PID control

Protection functions

Drive trip	Overvoltage, Undervoltage, Overcurrent, Drive overtemperature, Motor overtemperature, I/O phase loss, I/O mis-wiring, Overload , External device fault 1.2, Loss of speed command, Hardware fault, Communication error, CPU error
Drive alarm	Stall prevention, Overload alarm
Momentary power less	• Less than 15 msec : keeping operation • More than 15 msec : auto restart available

Display keypad

Operation information	Output frequency, current and voltage, Set frequency value, Operation speed, DC voltage
Trip information	Display the trip cause when the protection function activates. Recent 5 faults records stored

Environment

Operating ambient temp.	-10℃ ~ 50℃
Storage temperature	-20℃ ~ 65℃
Humidity	90%Rh max.(non condensing)
Altitude & Vibration	1000m max, 5.9m/sec^2(0.6g) max.
Atmosphere	No corrosive gas, flammable gas, oil mist or dust
Pressure	70~106k Pa

Wiring

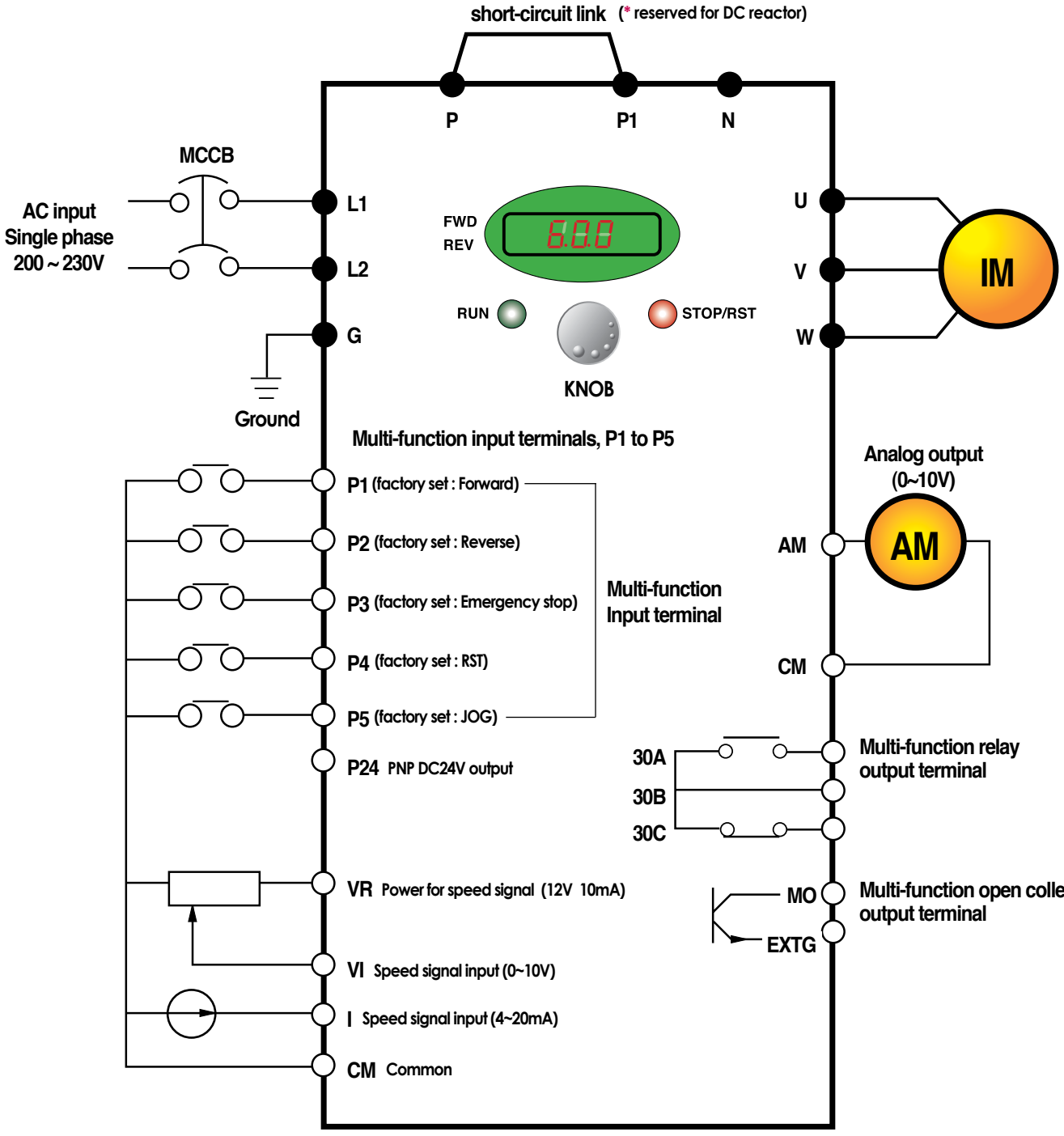

Note : 1. ● = Main circuit terminal ○ = Control circuit terminal
2. Analog output voltage is adjustable upto 12V.
3. Speed command can be set by Voltage, Current, Voltage+Current, Keypad, Keypad knob+Voltage , and Keypad knob+current.

Terminal configuration

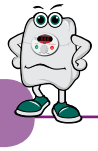

L1	L2	P	P1	N	U	V	W	G

Terminal	Signal	Description
L1, L2	AC line input	Single phase AC line input
U, V, W	Drive output	3 phase output terminals to motor
P, P1	DC reactor	Connecting DC reactor
G	Ground	Chassis ground

P4	P5	VR	V1	CM	I	AM

30A	30B	30C	MO	EXTG	P24	P1	P2	CM	P3

Terminal		Signal	Description
Input	P1, P2 P3, P4, P5	Multi-function input	Used for multi-function input. Factory default settings are as follows. P1 = FX, Forward P2 = RX, Reverse P3 = BX, Emergency stop P4=RST, Fault reset P5=JOG, Jog Operation Command
	P24	PNP DC24V output	DC24V power supply in case of PNP mode
	VR	Frequency setting power	Power for Analog frequency setting, Maximum output is +12V 10mA
	VI	Frequency setting(Voltage)	Input DC 0 to 10V to set frequency. Input resistance is 20k□□
	I	Frequency setting(Current)	Input DC 4 to 20mA to set frequency. Input resistance is 250□□
	CM	Common	Common terminal for the analog frequency setting signal and the FM(for monitoring)
Output	AM-CM	For monitoring	Output one out of Output frequency, Output current, Output voltage and DC voltage. Factory default set is to Output frequency. Maximum output voltage = 0 to 12V, output current = 10mA
	330A, 30C 30B MO-EXTG	Multi-function relay and Open collector output Terminal	To interrupt the output when the protection function activates or output multi-function signal. Multi-function relay terminal : Max. AC250V/1A, DC30V/1A Open collector output terminal : Max. DC24V 50mA

Keypad

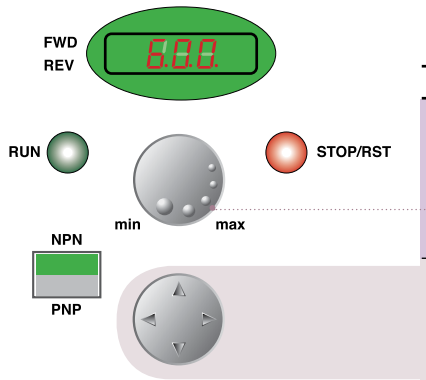

Key	Function	Description
RUN	Run key	To operate the drive
STOP/RESET	Stop/Reset key	To stop operating or reset in case of fault
●	Program/Enter	To change parameters and save them
KNOB(Volume)	Frequency	To change the frequency
NPN/PNP	Selection	Mode selection between NPN and PNP
▲	Up	To increase the parameter values
▼	Down	To decrease the parameter values
◀	Left	To move the cursor left
▶	Right	To move the cursor right

Parameter group

There are 4 parameter groups to set parameters properly for the operation.

Group	Description
Drive group	Basic parameters such as Command frequency, Accel/Decel time, etc.
Function 1 group	Basic functional parameters such as Max. frequency, Torque boost, etc.
Function 2 group	Application parameters such as Frequency jump, Max./Min. of limit of frequency, etc.
Input/Output group	Parameters to construct the sequence such as Multi-function terminal setting, Auto operation, etc.

Parameter group navigation

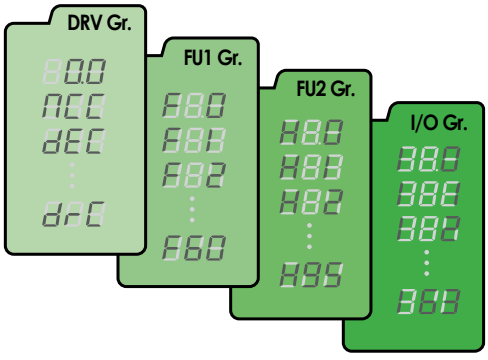

Drive group	Basic operation parameters such as Command frequency, Accel/Decel time, etc.
Function 1 group	Basic functional parameters for adjusting Output frequency, Voltage, etc.
Function 2 group	Application parameters of PID operation, The 2nd motor setting, etc.
Input/Output group	Parameters to construct the sequence such as Multi-function terminal setting, etc

● Shifting between groups is possible only in the first code of each group.

Shift by using Right shift key (▶)	Shift by using Left shift key (◀)
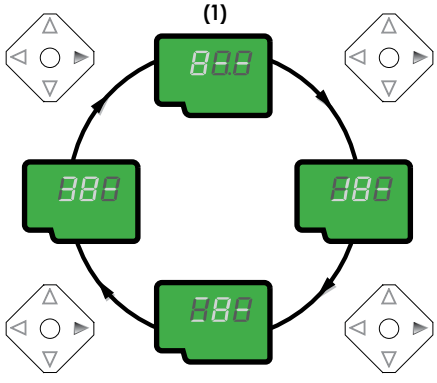	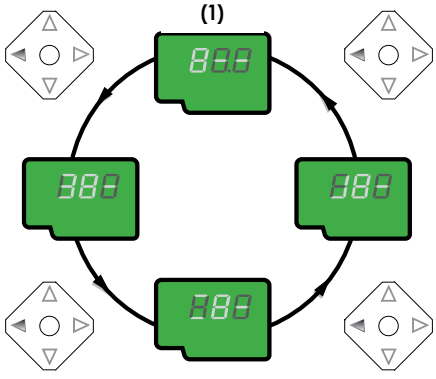

(1) The value of the Command frequency will be displayed in the first code of the Drive group.
It will show the value set by the operator. The factory set value is 0.0.

Parameter navigation in Drive group

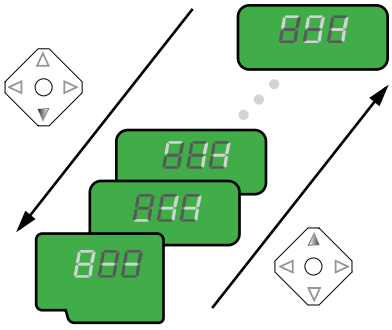

1	0.0	• The first code "0.0" displayed. • Press up(▲) key once to move to next code.
2	0.0	• The second code "ACC" appears. • Press up(▲) key once to move to next code.
3	0.00	• The third code "dEC" is shown. • Press up(▲) key to move to next code.
4	0.05	• To move to the last code press up(▲) key until "drC" appears. • Press up(▲) key once more to return to the first code.
5	0.0	• To move in reverse order use down(▼) key.

Procedure to set command frequency in Drive group

To input new command frequency 30.05[Hz] from 0.0 set in the factory

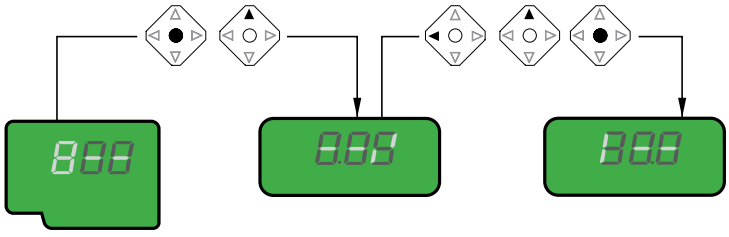

1	0.0	• The first code "0.0" displayed. • Press pro/ent(●) key.
2	0.0	• The digit of the first decimal place can be changed. • Press right (▶) key.
3	0.00	• The digit of the second decimal place can be changed. • Press up(▲) key until the digit becomes 5.
4	0.05	• Press left(◀) key.
5	0.05	• The left digit can be set. • Press left(◀) key.
6	0.05	• Press left(◀) key.
7	00.0	• Though 00.0 is displayed, the actual value remains at 0.05. • Make 3 by pressing up(▲) key.
8	30.0	• Press pro/ent(●) key. • 30.0 is flickering. • Press pro/ent(●) key to stop the flickering.
9	30.0	• Command frequency 30.0 is stored.

Note : (1) The LCD on the keypad of Drive iC5 displays only 3 digits.
Use the shift keys (◀ ▶) to monitor and set the parameters.
(2) To cancel the parameter setting press the shift keys
(◀ or ▶) while 30.0 is flickering in the procedure no. 8 .

Program parameters descriptions

Drive group	Keypad display	Description	Setting range	Factory default	Adjustable during run
	0.00	Output frequency : during run Reference frequency : during stop	0 to Max. frequency[Hz]	0.00	Yes
	ACC	Acceleration time	0 to 6000 [sec]	5	Yes
	DEC	Deceleration time	0 to 6000 [sec]	10	Yes
	Drv	Drive mode	0(Keypad) 1(Fx/Rx-1) 2(Fx/Rx-2) 3(ModBus)	1	No
	Frq	Frequency mode	0(Keypad-1) 1(Keypad-2) 2(Volume) 3(V1) 4(I) 5(Volume+1) 6(V1+I) 7(Volume+V1) 8(ModBus)	0	No
	St1	Step frequency 1	0 to Max. frequency[Hz]	10.00	Yes
	St2	Step frequency 2	0 to Max. frequency[Hz]	20.00	Yes
	St3	Step frequency 3	0 to Max. frequency[Hz]	30.00	Yes
	Cur	Output current	*[A]	*	*
	RPM	Motor speed	*[rpm]	*	*
	DCL	DC voltage	*[V]	*	*
	v0L/P0r/t0r	User display selection	*	*	*
	n0n	Fault display	*	*	*
	drC	Motor direction set	F(Forward) R(Reverse)	F	Yes
FU1 group	FU1	Function Group 1 selection		*	Yes
	FU2	Function Group 2 selection		*	Yes
	I/O	I/O Group selection		*	Yes
	F0	Jump to desired code #	1 to 60	1	Yes
	F3	Run prevention	0(None) 1(Forward disable) 2(Reverse disable)	0	No
	F5	Acceleration pattern	0(Linear) 1(S-curve)	0	No
	F6	Deceleration pattern	0(Linear) 1(S-curve)	0	No
	F7	Stop mode	0(Decel) 1(Dc-brake) 2(Free-run)	0	No
	F8	DC injection braking frequency	F23 to 60[Hz]	5	No
	F9	DC injection braking ON-delay	0 to 60 [sec]	0.1	No
	F10	DC injection braking voltage	0 to 200[%]	50	No
	F11	DC injection braking time	0 to 60 [sec]	1	No
	F12	Starting DC injection braking voltage	0 to 200[%]	50	No
	F13	Starting DC injection braking time	0 to 60 [sec]	0	No
	F14	Motor exciting time	0 to 60 [sec]	1	No
	F20	Jog frequency	0 to 400 [Hz]	10	No
	F21	Maximum frequency	40 to 400 [Hz]	60	No
	F22	Base frequency	30 to Max. frequency[Hz]	60	No
	F23	Starting frequency	0 to 10 [Hz]	0.5	No
	F24	Frequency limit selection	0(No), 1(Yes)	0	No
	F25	Frequency limit - high	0 to High limit [Hz]	60	No
	F26	Frequency limit - low	Low limit to Max. frequency[Hz]	0.5	No
	F27	Manual/Auto torque boost selection	0(Manual), 1(Auto)	0	No
	F28	Torque boost in forward direction	0.0 to 15.0[%]	5	No
	F29	Torque boost in reverse direction	0.0 to 15.0[%]	5	No
	F30	Volts/Hz pattern	0(Linear) 1(Square) 2(User V/F)	0	No

FU1 group	Keypad display	Description	Setting range	Factory default	Adjustable during run
	F31	User V/F - frequency 1	0 to F33[Hz]	15	No
	F32	User V/F - voltage 1	0 to 100[%]	25	No
	F33	User V/F - frequency 2	F31 to F35[Hz]	30	No
	F34	User V/F - voltage 2	0 to 100[%]	50	No
	F35	User V/F - frequency 3	F33 to F37[Hz]	45	No
	F36	User V/F - voltage 3	0 to 100[%]	75	No
	F37	User V/F - frequency 4	F35 to Maximum frequency[Hz]	60	No
	F38	User V/F - voltage 4	0 to 100[%]	100	No
	F39	Output voltage adjustment	40.0 to 110.0[%]	100	No
	F40	Energy save	0 to 30[%]	0	Yes
	F50	Electronic thermal selection	0(No), 1(Yes)	0	Yes
	F51	Electronic thermal level -1 min.	F52 to 200[%]	150	Yes
	F52	Electronic thermal level -continuous	50 to F51[%]	100	Yes
	F53	Motor cooling system	0(self cool) 1(forced cool)	0	Yes
	F54	Overload alarm level	30 to 150[%]	150	Yes
	F55	Overload alarm hold time	0 to 30[sec]	10	Yes
	F56	Overload trip selection	0(No), 1(Yes)	1	Yes
	F57	Overload trip level	30 to 200[%]	180	Yes
	F58	Overload trip delay time	0 to 60[sec]	60	Yes
	F59	Stall prevention mode selection	000 to 111(bit set) Bit 0 : During accel. Bit 1 : During steady speed Bit 2 : During decel.	000	No
	F60	Stall prevention level	30 to 150[%]	150	No
FU2 group	H0	Jump to desired code #	1 to 95	1	Yes
	H1	Previous fault history 1		nOn	*
	H2	Previous fault history 2		nOn	*
	H3	Previous fault history 3		nOn	*
	H4	Previous fault history 4		nOn	*
	H5	Previous fault history 5		nOn	*
	H6	Delete fault history	0(No), 1(Yes)	0	Yes
	H7	Dwell frequency	0 to Max. frequency[Hz]	5	No
	H8	Dwell time	0 to 10[sec]	0	No
	H10	Selection of jump frequency	0(No), 1(Yes)	0	No
	H11	Jump frequency 1, low	0 to H12[Hz]	10	No
	H12	Jump frequency 1, high	H11 to Maximum frequency[Hz]	15	No
	H13	Jump frequency 2, low	0 to H14[Hz]	20	No
	H14	Jump frequency 2, high	H13 to Maximum frequency[Hz]	25	No
	H15	Jump frequency 3, low	0 to H16[Hz]	30	No
	H16	Jump frequency 3, high	H15 to Maximum frequency[Hz]	35	No
	H17	Inclination at the beginning of S curve	1 to 100[%]	40	No
	H18	Inclination at the end of S curve	1 to 100[%]	40	No
	H19	Output phase loss protection	0(No), 1(Yes)	0	Yes
	H20	Power ON start selection	0(No), 1(Yes)	0	Yes
	H21	Restart after fault reset	0(No), 1(Yes)	0	Yes
	H22	Speed search selection	0000 to 1111(bit set) Bit 0 : During accel. Bit 1 : After fault reset Bit 2 : Restarted after instant power failure Bit 3 : When H20 is set to 1(Yes)	0	No
	H23	Speed search current limitation level	8 to 200[%]	100	Yes
	H24	Speed search P gain	0 to 9999	100	Yes
	H25	Speed search I gain	0 to 9999	1000	Yes
	H26	Number of auto restart attempt	0 to 10	0	Yes
	H27	Delay time before auto restart	0 to 60[sec]	1	Yes
	H30	Motor power rating selection	0.2, 0.75, 1.5, 2.2[kW]	*	No
	H31	Number of motor poles	2 to 12	4	No
	H32	Rated motor slip	0 to 10[Hz]	*	No
	H33	Rated motor current in RMS	0 to 20[A]	*	No
	H34	No load motor current in RMS	0.1 to 20[A]	*	No
	H36	Motor efficiency	70 to 100[%]	*	No

FU2 group	Keypad display	Description	Setting range	Factory default	Adjustable during run
	H37	Load inertia	0 to 2	0	No
	H39	Carrier frequency	1 to 15[kHz]	3.0	Yes
	H40	Control mode selection	0(V/F) 1(Slip compen) 2(PID) 3(Sensorless vector control)	0	No
	H41	Auto tuning	0 to 1	0	Yes
	H42	Stator reristance	0 to 5 [ßŸ]	0	Yes
	H44	Leakage inductance	0 to 300[mH]	0	Yes
	H45	Sensorless P gain	0 to 32767	1000	Yes
	H46	Sensorless I gain	0 to 32767	100	Yes
	H50	PID feedback signal selection	0(I) 1(V1)	0	No
	H51	P gain for PID control	0 to 999.9[%]	300	Yes
	H52	I gain for PID control	0.1 to 32.0[sec]	1	Yes
	H53	D gain for PID control	0.1 to 30.0[sec]	0	Yes
	H54	F gain for PID control	0 to 999.9[%]	0	Yes
	H55	Limit frequency for PID control	0 to Max. frequency[Hz]	60	Yes
	H70	Reference frequency for Accel/Decel	0(Max. freq.) 1(Delta freq.)	0	Yes
	H71	Accel/Decel time scale	0(0.001sec) 1(0.01sec) 2(1sec)	1	No
	H72	Power On display	0(Command frequency) 1(Accel. Time) 2(Decel. Time) 3(Drive mode) 4(Frequency mode) 5(Step frequency 1) 6(Step frequency 2) 7(Step frequency 3) 8(Current) 9(Speed) 10(DC link voltage) 11(User display) 12(Fault display) 13(Motor direction)	0	Yes
	H73	User display selection	0(Voltage) 1(Watt) 2(Torque)	0	Yes
	H74	Gain for motor speed display	1 to 1000[%]	100	Yes
	H79	Software version	x.xx	x.xx	*
	H81	2nd acceleration time	0 to 6000 [sec]	5	Yes
	H82	2nd deceleration time	0 to 6000 [sec]	10	Yes
	H83	2nd acceleration time	30 to Max. frequency[Hz]	60	No
	H84	2nd V/F pattern	0(Linear) 1(Square) 2(User V/F)	0	No
	H85	2nd forward torque boost	0.0 to 15.0[%]	5	No
	H86	2nd reverse torque boost	0.0 to 15.0[%]	5	No
	H87	2nd stall prevention level	30 to 150[%]	150	No
	H88	2nd electronic thermal level -1 min.	H89 to 200[%]	150	Yes
	H89	2nd electronic thermal level -continuous	50 to H88[%]	100	Yes
	H90	2nd motor rated current	0.1 to 20[A]	*	No
	H93	Parameter initializing	0(No) 1(All groups) 2(Drive) 3(Function 1) 4(Function 2) 5(I/O)	0	No
	H94	Parameter writing protection	0 to FFF	0	Yes
	H95	Parameter change protection	0 to FFF	0	Yes

I/O group	Keypad display	Description	Setting range	Factory default	Adjustable during run
	I0	Jump to desired code #	0 to 63	1	Yes
	I1	Filtering time constant for V0 signal input	0 to 9,999[msec]	10	Yes
	I2	V0 input minimum voltage	0 to 10V	0	Yes
	I3	Frequency corresponding to I2	0 to 400 [Hz]	0.0	Yes
	I4	V0 input maximum voltage	0 to 10V	10	Yes
	I5	Frequency corresponding to I4	0 to 400 [Hz]	60.0	Yes
	I6	Filtering time constant for V1 signal input	0 to 9,999[msec]	10	Yes
	I7	V1 input minimum voltage	0 to 10V	0	Yes
	I8	Frequency corresponding to I7	0 to Max. frequency[Hz]	0.0	Yes
	I9	V1 input maximum voltage	0 to 10V	10	Yes
	I10	Frequency corresponding to I9	0 to Max. frequency[Hz]	60	Yes
	I11	Filtering time constant for I signal input	0 to 9,999[msec]	10	Yes
	I12	I input minimum current	0 to 20[mA]	4	Yes
	I13	Frequency corresponding to I12	0 to Max. frequency[Hz]	0	Yes
	I14	I input maximum current	I12 to 20[mA]	20	Yes
	I15	Frequency corresponding to I14	0 to Max. frequency[Hz]	60.0	Yes
	I16	Criteria for analog speed signal loss	0(None) 1(Half of x1) 2(Below x1)	0	Yes
	I20	Definition of multifunction input terminal P18, 9, 15, 20, 21, 22, 23, 24, 25, 26 (- reserved -)	0(FX) 1(RX) 2(BX) 3(RST) 4(JOG) 5(Speed-L) 6(Speed-M) 7(Speed-H) 8(XCEL-L) 9(XCEL-M) 10(XCEL-H) 11(DC-Brake) 12(2nd function) 15(Up) 16(Down) 17(3 wire) 18(EXT-A) 19(EXT-B) 21(Open-loop) 22(Main drive) 23(Analog hold) 24(XCEL-stop)	0(FX)	Yes
	I21	Definition of multifunction input terminal P2	Same as above I20	1(RX)	Yes
	I22	Definition of multifunction input terminal P3	Same as above I20	2(EST)	Yes
	I23	Definition of multifunction input terminal P4	Same as above I20	3(RST)	Yes
	I24	Definition of multifunction input terminal P5	Same as above I20	4(JOG)	Yes
	I25	Terminal input status	00000-11111[bit]	*	*
	I26	Terminal output status	00-11[bit]	*	*
	I27	Filtering time constant for multifunction input terminal	0 to Max. frequency[Hz]	15	Yes
	I30	Step frequency 4	0 to Max. frequency[Hz]	30	Yes
	I31	Step frequency 5	0 to Max. frequency[Hz]	25	Yes
	I32	Step frequency 6	0 to Max. frequency[Hz]	20	Yes
	I33	Step frequency 7	0 to Max. frequency[Hz]	15	Yes
	I34	Acceleration time 1	0 to 600 [sec]	3	Yes
	I35	Deceleration time 1	0 to 600 [sec]	3	Yes
	I36	Acceleration time 2	0 to 600 [sec]	4	Yes
	I37	Deceleration time 2	0 to 600 [sec]	4	Yes
	I38	Acceleration time 3	0 to 600 [sec]	5	Yes
	I39	Deceleration time 3	0 to 600 [sec]	5	Yes
	I40	Acceleration time 4	0 to 600 [sec]	6	Yes
	I41	Deceleration time 4	0 to 600 [sec]	6	Yes
	I42	Acceleration time 5	0 to 600 [sec]	7	Yes

I/O group	Keypad display	Description	Setting range	Factory default	Adjustable during run
	I43	Deceleration time 5	0 to 600 [sec]	7	Yes
	I44	Acceleration time 6	0 to 600 [sec]	8	Yes
	I45	Deceleration time 6	0 to 600 [sec]	8	Yes
	I46	Acceleration time 7	0 to 600 [sec]	9	Yes
	I47	Deceleration time 7	0 to 600 [sec]	9	Yes
	I50	AM output	0(Frequency) 1(Current) 2(Voltage) 3(DC link voltage)	0	Yes
	I51	AM output adjustment	100 to 200[%]	100	Yes
	I52	Frequency detection level	0 to Max. frequency[Hz]	30	Yes
	I53	Frequency detection bandwidth	0 to Max. frequency[Hz]	10	Yes
	I54	Definition of multifunction output terminal MO	0(FDT-1) 1(FDT-2) 2(FDT-3) 3(FDT-4) 4(FDT-5) 5(OL) 6(IOL) 7(Stall) 8(OV) 9(LV) 10(OH) 11(Lost command) 12(Run) 13(Stop) 14(Steady) 15(Search) 16(Ready) 17(Fault select)	12	Yes
	I55	Definition of relay functions	Same as above I54	17	Yes
	I56	Fault relay setting (30A, 30B, 30C)	000 to 111(bit set) Bit 0 : Low voltage Bit 1 : Trip Bit 2 : Number of auto retry	010	Yes
	I60	Drive number	1 to 32	1	Yes
	I61	Baud rate	0(1200bps) 1(2400bps) 2(4800bps) 3(9600bps) 4(19200bps)	3	Yes
	I62	Operating selection at loss of freq. reference	0(None) 1(Free run) 2(Stop)	0	Yes
	I63	Waiting time after loss of freq. reference	0.1 to 12[sec]	1.0	Yes

Peripheral Device

MCCB (Molded Case Circuit Breaker) and MC (Magnetic Contactor)

Voltage	Capacity [kW]	Circuit Breaker (MCCB)				Leakage Breaker (ELCB)		Magnetic Contactor (MC)	
		Model	Rated Current[A]	Model	Rated Current[A]	Model	Rated Current[A]	Model	Rated Current[A]
1-Phase 200V	0.4	ABS33c	0.4	UTE100	5	EBS33c	5	MC-6a	9
	0.75		0.75		10		10	MC-9a, MC-9b	11
	1.5		1.5		15		15	MC-18a, MC-18b	18
	2.2		2.2		20		20	MC-22b	22
3-Phase 200V	0.4	ABS33c	0.4	UTE100	15	EBS33c	15	MC-6a	9
	0.75		0.75		15		15	MC-9a, MC-9b	11

Warning :

If protection function activates due to error/fault in the drive, corresponding alarm is displayed on the keypad as shown below.
Correct the error/fault before restarting or it may decrease the drive's life expectancy.

Display	Fault/Error	Description
OCt	Overcurrent	Output current has been greater than 200% of the rated current. The drive output is interrupted.
GFt	Ground fault	Ground fault has been occurred at the load side of the drive. The drive output is interrupted.
IOL	Drive overload	Output current greater than 150% of the rated current has been flowed over 1 min. The drive output is interrupted.
OLt	Overload trip	Output current has been greater than the set value (F57) of the rated current. The drive output is interrupted.
OHt	Coolingpin overheat	Cooling pin has been overheated due to high ambient temperature. The drive output is interrupted.
COL	DC link condenser overload	If the DC condenser of Drive is in need of replacement the drive output is interrupted.
POt	Output phase loss	One or more of output line U, V and W lost. The drive output is interrupted.
OUt	Overvoltage	The drive main voltage has been risen above the permissible limit 400V. Check if deceleration time has been set too short or line input voltage is too high.
LUt	Undervoltage	The drive output is interrupted.
EtH	Electronic thermal	The drive output is interrupted according to the set time-inverse curve to prevent the overtemperature of the motor due to overloads.
EEP	Parameter store error	Error has been occurred on the storing of the changed parameters. It is displayed when power is on.
HWt	Hardware error	It is displayed in case of software error. It is not possible to reset by STOP/RST key on the keypad or reset terminals. Open the drive power and make sure the keypad power is off and close the power again.
Err	Communication error	Communication error between controller and keypad. It is not possible to reset by STOP/RST key on the keypad or reset terminals. Open the drive power and make sure the keypad power is off and close the power again.
FAn	Coolingfan error	Error has been occurred on the coolingfan.
EST	Output instant interrupting	The drive output is interrupted in the case that BX terminal is ON. **Warning** : To restart the drive make BX terminal OFF during the FX /RX is ON.
StA	A contact fault signal input	If I20/21/22/23/24 set to 18 is ON, the drive output is interrupted.
StB	B contact fault signal input	If I20/21/22/23/24 set to 19 is ON, the drive output is interrupted.
LOL	Frequency command loss	If signal input is failed for the driving by using analog input or option(RS485), try to drive according to the setting at I62.

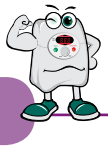

Fault/Error	Possibsle cause	Solution
BCE Overcurrent	● Accel/Decel time is not enough for the load inertia (GD^2) Increase the Accel/Decel time ● The load is greater than the rating of the drive. ● Drive output is assigned during the free run of the motor. ● The motor brake operates too fast.	▶ Replace the drive with a higher rating ▶ Operate after the motor stops or use speed search(H22) in FU2 in the output terminals. ▶ Verify the output wiring ▶ Verify the mechanical brake.
GFE Ground fault	● Ground fault at the load side of the drive. ● Insulation of the motor is broken.	▶ Check to see if there is something wrong with output wiring. ▶ Replace a motor.
IOE Drive overload OLE Overload trip	● The load is greater than the rating of the drive. ● Power rating is set to the lower value than the load ● Torque boost is too great.	▶ Increase the ratings of a motor and an drive. ▶ Check to see if the setting is correct. ▶ Reduce the torque boost.
OHE Cooling fan overheat	● Fault in the cooling system. ● The cooling fan is used beyond the life expectancy. ● High ambient temperature	▶ Check to see if there is any alien substance in the ventilation system. ▶ Replace the cooling fan. ▶ Keep the ambient temperature below 40°….
POE Output phase loss	● Fault in the load side contactor ● Wiring problem	▶ Replace the contactor. ▶ Verify the output wirin
FAN Coolingfan error	● Alien substances are in the ventilator. ● The cooling fan is used beyond the expectancy.	▶ Check to see if there is any alien substance in the ventilation system. ▶ Replace the cooling fan.
OUE Overvoltage	● Decel time is not enough for the load inertia(GD^2) ● There is a survived load in the load side. ● Higher voltage than rating is supplied.	▶ Increase the Decel time ▶ Uase DB unit. ▶ Verify the power voltage.
LUE Undervoltage	● Lower voltage than rating is supplied. ● Power capacity is not enough for the additional loads like welders and direct-on-line starting motors. ● Fault in the line side contactor	▶ Verify the power voltage. ▶ Increase the power capacity. ▶ Replace the contactor.
ETH Electronic thermal	● Overtemperature of the motor ● The load is greater than the rating of the drive. ● Electronic thermal level is set lower than rating. ● Drive power rating is set to the lower value than the load ● Long operation at low speed.	▶ Reduce the load or operation times. ▶ Increase the ratings of the drive. ▶ Adjust the electronic thermal properly. ▶ Adjust the drive rating properly. ▶ Replace the motor with the separated power cable for the cooling fan.
STA A contact fault signal input STB B contact fault signal input	● The terminal I20/21/22/23/24 set to18/19 is ON	▶ Verify the circuits connected to the external fault terminals.
LOE Frequency command loss	● Frequency command loss at terminals V1 and I	▶ Verify the wiring connected to V1 and I terminals.
EEP Parameter store error HWE Output instant interrupting ERR Communication error	● Refer to LS or distributors	

Warning :

Carefully read the instruction for installation and wiring of drives and relevant devices. Normal operation is impossible in case of the improper system design and wiring. These can shorten the life of the drive and damage it at the worst.

INDUCTORS FOR VARIABLE SPEED DRIVES

The inductors manufactured with special magneticcores are advisable for location: BETWEEN MAINS AND VARIABLE SPEED DRIVE, in order to protect the equipment from overvoltages, voltage surges and also to limit the line current and the harmonics generated by VSD. BETWEEN VARIBLE SPEED DRIVE AND MOTOR, to absorb the voltage peaks in the motor terminals, when the connection cables are long or there are more than one motor in parallel, for having a better efficiency and to eliminate the humming noise of the motor.

POWER LINE FILTERS

The family of filters manufactured by LIFASA has been specially developed and approved for its application with variable speed drives, to assure the compliance of the EMC (Electro Magnetic Compatibility) and the LV safety European Directives, in both industrial and domestic environments.

VARIABLE SPEED DRIVES

- Powers from 0.37 to 375 kW
- Sngle/three phase voltages 220/230 Vac
- Three phase voltages 380/460 Vac
- Sensorless vector control, V/F closed loop
- Removable console with copy function
- RS485 communication facilities as standard
- Autotuning
- Special parameters for special applications

OUTPUT LC FILTERS

The commutation of the IGBT's at high frequency (PWM) provokes an output voltage with peaks up to 1300 V The LC filter - low pass - reduce the dV/dt converting the voltage in a sinus waveform, eliminating all the isolation problems in the motor and the emission of interference from the cables.

※ **Filter for use of LS Drives :**

Vector Motor Control Ib'erica (VMC)
C/Mar del Carib, 10 - Pol. Ind. La Torre del Rector 08130 - Santa Perp`etua de Mogoda (Barcelona) - SPAIN
Tel: (+34) 935 748 206 - Fax: (+34) 935 748 248 e-mail: info@vmc.es - www.vmc.es

AKSA OTOMASYON

Green Innovators of Innovation

Safety Instructions

- For your safety, please read user's manual thoroughly before operating.
- Contact the nearest authorized service facility for examination, repair, or adjustment.
- Please contact a qualified service technician when you need maintenance.
  Do not disassemble or repair by yourself!
- Any maintenance and inspection shall be performed by the personnel having expertise concerned.