Thank you for purchasing LS Modbus/TCP Option board.

Safety Instruction

- To prevent injury and danger in advance for safe and correct use of the product, be sure to follow the Safety Instructions.

- The instructions are divided as 'WARNING' and 'CAUTION' which mean as follow.

⚠	**WARNING**	This symbol indicates the possibility of death or serious injury.
⚠	**CAUTION**	**This symbol indicates the possibility of injury or damage to property.**

- The meaning of each symbol in this manual and on your equipment is as follows.

⚠	This is the safety alert symbol.
⚠	This is the dangerous voltage alert symbol.

- After reading the manual, keep it in the place that the user always can Contact easily.
- Read carefully this manual to use the communication option function of SV-iP5A Series Inverter safely and correctly.

⚠ WARNING

- **Be cautious about dealing with CMOS elements of option board.**
  It can cause malfunction by static electricity.
- **Connection changing like communication wire change must be Done with power off.**
  It can cause communication faulty or malfunction.
- **Be sure to connect exactly between Inverter and option board.**
  It can cause communication faulty or malfunction.
- **Check parameter unit when setting parameter.**
  It can cause communication faulty

www.aksaotomasyon.com
AKSA OTOMASYON

1. Introduction

Modbus/TCP communication board make SV-iP5A inverter be connected to Ethernet network. Controlling and monitoring inverter can be done by PLC sequence program or any Master Module. Since Ethernet which constitutes Internet has been used and IPV4 has been supported, wherever Internet can be done, controlling and monitoring is possible. But, Ethernet network of the factory has to be connected to Internet through Gateway.
With simple wiring, installation time can be reduced and maintenance becomes easier.

2. Modbus/TCP Technical features

Transmission Speed	10Mbps, 100Mbps
Transmission method	Baseband
Max. extended distance between nodes.	100m (Node-Hub)
Max. node number	Hub connection
Auto Negotiation	Supported
Max. Frame size	1500 byte
Communication zone access method	CSMA/CD
Frame error checking method	CRC32
Recommended connecting channel	3 channel

3. Product Constituents

-. Modbus TCP communication board : 1 ea
-. Supporting pole : 3 ea
-. The manual : 1 ea

www.aksaotomasyon.com
AKSA OTOMASYON

4. Modbus/TCP Appearance and Installation

Installing communication card to iP5A inverter

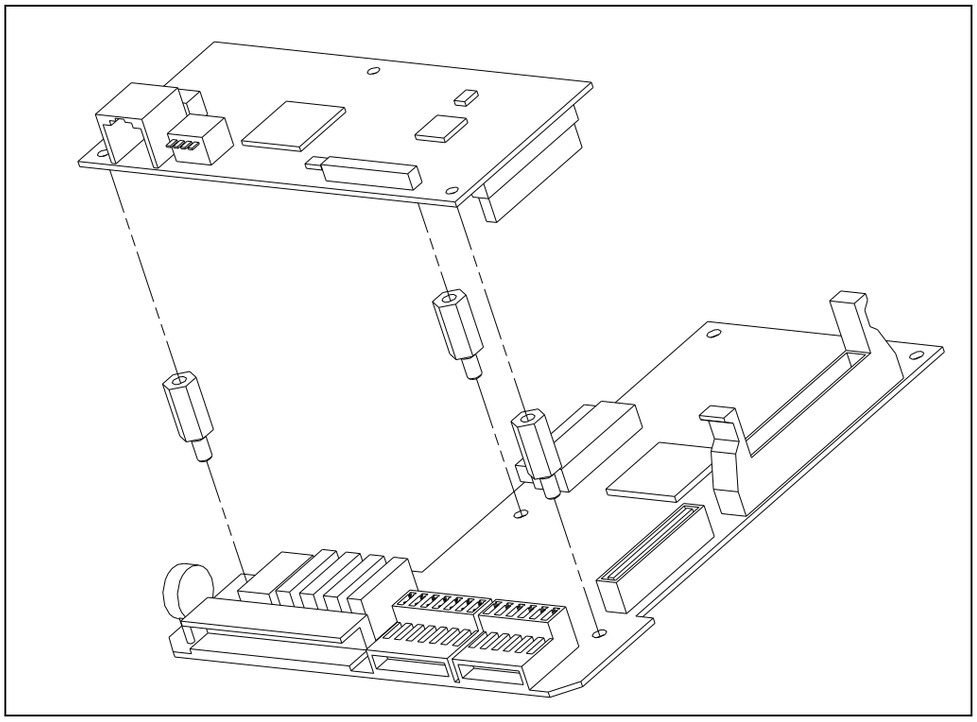

www.aksaotomasyon.com
AKSA OTOMASYON

5. Network Connection

Communication cable connecting terminal

Pin No.	Signal	Description	Cable color
1	TX+	Transmitting data Plus	White / Yellow
2	TX-	Transmitting data Minus	Yellow
3	RX+	Receiving data Plus	White / Green
4	NONE	Not used	Blue
5	NONE	Not used	White / Blue
6	RX-	Receiving data Minus	Green
7	NONE	Not used	White / Brown
8	NONE	Not used	Brown

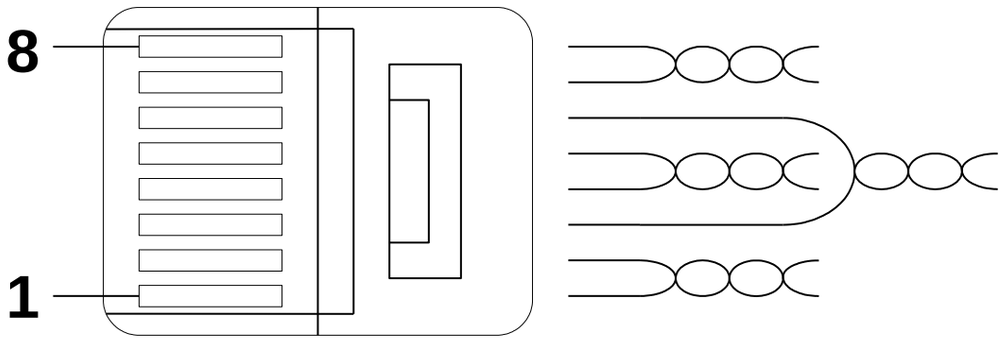

※ Make sure that cables connected to Pin1 and 2 are twisted together.
※ Make sure that cables connected to Pin3 and 6 are twisted together.

www.aksaotomasyon.com
AKSA OTOMASYON

6. Network Cable Standard

(1) Used Frequency band

Category 5 is used. Transmitting speed of category 5 is 100MHz and possible up to 100Mbps.

(2) Twisted Pair cable type

Classification	Detail	Used
UTP (U.UTP)	High speed signal cable with no cover	Maximum 200MHz Voice + Information(Data)+ Low-grade Video signal
FTP (S.UTP)	Cable core covered only	Maximum 100MHz Electromagnetic interruption (EMI) or electric stability considered Voice+ Information (Data) + Low-grade Video signal
STP (S.STP)	Double-covered, separately covered Pair with cable core covered	Maximum 500MHz Voice +Information(Data)+ Video signal 75Ω coaxial cable replacement

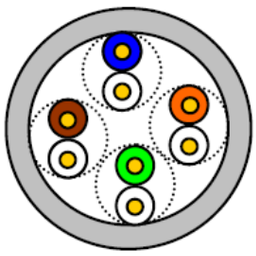

UTP

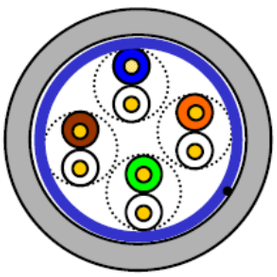

FTP

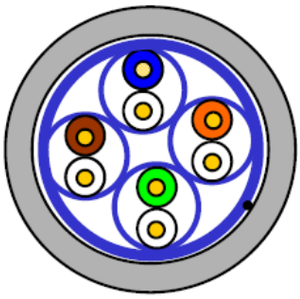

STP

www.aksaotomasyon.com
AKSA OTOMASYON

7. Modbus/TCP related Keypad parameter

Inverter parameters below display Modbus/TCP related information.

iP5A Modbus/TCP related Keypad parameter				
Code number	Parameter name	Initial value	Setting value	Description
COM-01	Opt B/D	-	-	Communication card installed in inverter is displayed. (If Modbus/TCP comm. Card is installed, "Modbus/TCP" is displayed)
COM-02	Opt mode	None	None Command Freq Cmd +Freq	set method for drive and freq. command of communication card
COM-03	Opt Version	-	-	The version of Communication card installed in inverter is displayed.
COM-61	IP Addr Hi	C0:A8 HEX	00:00 HEX ~ FF:FF HEX	Set IP Address.
COM-62	IP Addr Lo	64:0A HEX	00:00 HEX ~ FF:FF HEX	
COM-63	Subnet Hi	FF:FF HEX	00:00 HEX ~ FF:FF HEX	Set Subnet Mask.
COM-64	Subnet Lo	FF:00 HEX	00:00 HEX ~ FF:FF HEX	
COM-65	Gateway Hi	C0:A8 HEX	00:00 HEX ~ FF:FF HEX	Set Gateway Address.
COM-66	Gateway Lo	64:01 HEX	00:00 HEX ~ FF:FF HEX	
COM-67	Comm Update			Communication related Keypad parameter is Updated.

www.aksaotomasyon.com
AKSA OTOMASYON

(1) Opt B/D (Option card information, COM-01)

The type of communication card installed in inverter is displayed automatically. If iP5A Modbus/TCP communication card is installed, "Modbus/TCP" message is displayed automatically.

(2) Opt mode (drive and freq. command setting mode, COM-02)

Set the method for drive and freq. setting command of communication card.

(3) Opt Version (Option version information, COM-03)

Version of communication card installed in inverter is displayed automatically.

(4) Modbus/TCP IP, Subnet Mask, Gateway Address (COM-61~66)

IP version that Modbus/TCP option supports is v4.

All the addresses and masks are expressed as decimal number. decimal number. decimal number. decimal number and a number between 0 and 255 is input for each decimal number.

In Modbus/TCP option, all decimal number is supposed to changed into hexadecimal number. Also input dividing 2 higher hexadecimal numbers and 2 lower numbers

EX) For setting IP Address 196.168.10.131
Change 196.168.10.131 into hexadecimal numbers. C0.A8.0A.83
For COM-61 IP Addr Hi, input C0:A8 HEX.
ForCOM-62 IP Addr Lo, input 0A:83 HEX.

(5) Comm UpDate (COM-67)

For COM-61 ~ 66 parameters, when power inputs for the first time, the values set in Option are expressed. But if you set, the setting is not reflected at once. If Comm Update is set as Yes, the value is reflected to Modbus/TCP communication card and only Modbus/TCP communication card operates again. In the case of Parameter initialization, the values of COM-61 ~ 66 are changed into initial values even though they aren't reflected to actual option board. So also in this case, Comm. UpDate has to be done.

www.aksaotomasyon.com
AKSA OTOMASYON

8. Inverter communication address

Refer to iP5A manual appendix C - built-in comm. Parameter list

9. Modbus/TCP Frame

(1) Modbus/TCP Frame structure

MBAP Header(7 bytes)	PDU (5 bytes ~)

Generally, Ethernet uses Ethernet II Frame.

MODBUS Application Protocol Header (MBAP Header)

MBAP Header structure is as below.

Region	Length	Description
Transaction Identifier	2 Bytes	As an identified transmitting number, is increased by 1 each time Data Frame is send to Server from Client.
Protocol Identifier	2 Bytes	Fixed as 0.
Length	2 Bytes	Modbus Data Frame length. From MBAP Header to Unit Identifier, Byte-unit length can be expressed.
Unit Identifier	1 Bytes	When Modbus TCP and Modbus RTU are connected with Gate, Slave number is written. When Modbus TCP is only used, it is fixed as 0xFF.

Protocol Data Unit (PDU)

AS an actual Data of Modbus TCP, consists of Function Code and Data.
Detail information will be given at “(2) Function Code Description.”

www.aksaotomasyon.com
AKSA OTOMASYON

(2) Function Code Description

Modbus TCP can be divided into Client and Server. Client gives the command and Server responds to the command. Generally, as Client, there are PLC, HMI, PC so on, and Server means inverter.

① Read Multiple Registers

It is a function for reading Data from Inverter (Server).

Frame Constitution that Client requires Server

Required Frame	Length	Value
Function Code	1 Bytes	0x03
Comm. Address	2 Bytes	0x0000 ~ 0xFFFF
Required Data number	2 Bytes	1~16 (by LSIS Inverter standard)

Frame Constitution that Server responds to Master

Responded Frame	Length	Value
Function Code	1 Bytes	0x03
Comm. Address	1 Bytes	2 x Data required number
Required Data number	Data required number x 2 Bytes	Required number of Data from comm. address

② Write Single Register

The function is used when modifying 1 Data of Inverter (Server).

Frame Constitution that Client requires Server

Required Frame	Length	Value
Function Code	1 Bytes	0x06
Comm. Address	2 Bytes	0x0000 ~ 0xFFFF
Data Value	2 Bytes	0x0000 ~ 0xFFFF

www.aksaotomasyon.com
AKSA OTOMASYON

Frame Constitution that Server responds to Master

Responded Frame	Length	Value
Function Code	1 Bytes	0x06
Comm. Address	2 Bytes	0x0000 ~ 0xFFFF
Data Value	2 Bytes	0x0000 ~ 0xFFFF

③ Write Multiple Register

The function is used when modifying consecutive Data from 1 up to 16 of inverter (Server).

Frame Constitution that Client requires Server

Required Frame	Length	Value
Function Code	1bytes	0x10
Comm. Address	2bytes	0x0000 ~ 0xFFFF
Modifying Data number	2byte	1~16 (by LSIS inverter standard)
Byte Count	1byte	2 X Data number
Data value to be modified	Data number x 2 bytes	Data for modifying

Frame Constitution that Server responds to Master

Responded Frame	Length	Value
Function Code	1 Bytes	0x10
Comm. Address	2 Bytes	0x0000 ~ 0xFFFF
Modifying Data number	2 Bytes	1~16 (by LSIS inverter standard)

www.aksaotomasyon.com
AKSA OTOMASYON

(3) Except Frame

Except Frame is for responding from Server if Error happens performing the required Frame when Client sends required Frame to Server.

Exception Frame Structure

Error Frame	Length	Value
Error Code	1bytes	0x80 + Function Code that Client requires
Exception Code	1bytes	0x0000 ~ 0xFFFF

Exception Code Type

www.aksaotomasyon.com
AKSA OTOMASYON

Type	Code	Description
ILLEGAL FUNCTION	0x01	If non-supported Function is Required, this massage is displayed.
ILLEGAL DATA ADDRESS	0x02	If Data of not used address is required or to be modified, this massage is displayed.
ILLEGAL DATA VALUE	0x03	If you try to modify Data with the Value that is against the permitted Data range, this massage is displayed.
SLAVE DEVICE FAILURE	0x04	If there is error in Server (CAN Comm. ERROR with inverter, Option initialization ERROR, failure of DATA comm. with inverter), this massage is displayed.
SLAVE DEVICE BUSY	0x06	If Server can't respond due to other process (such as Inverter parameter initialization or option initialization setting), this massage is displayed.
READ ONLY ADDRESS	0X14	If you try to save address that is only for reading value, this massage is displayed.
WRITE PERMITION ERROR	0x20	This Code only exists at LS inverter. If you try to modify modifying prohibited parameter value this massage is displayed.

10. LED Information

In Modbus/TCP communication card, 4 LEDs which indicate the Modbus/TCP state to the user are installed. In iP5A Modbus/TCP communication card, LEDs are displayed as below.

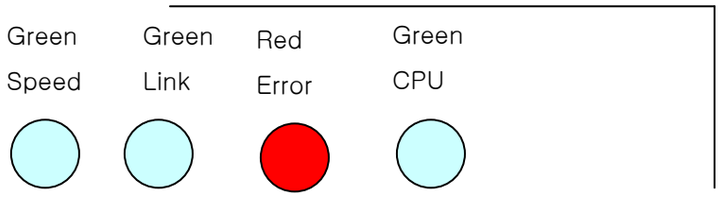

www.aksaotomasyon.com
AKSA OTOMASYON

LED name	Color	Function
CPU	Green	**BLINK** – It means Modbus/TCP communication card CPU is operating normally when the power is well supplied to iP5A Modbus/TCP.
ERROR	Red	**OFF** – It means Modbus/TCP communication card is normal without Error. **CPU, ERROR Flashing by turns** **–** If IP Address is set as 0x00.0x00.0x00.0x00 or 0xFF.0xFF.0xFF.0xFF. Using special IP like 0.0.0.0 or 255.255.255.255 is not recommended **Twice of CPU Blinking period time Flashing** **–** It means IP Address Setting is being tried. If you set Com update as Yes, LED is off as IP Address set in keypad is reflected to option board. **CPU, ERROR Flashing at the same time–** It means Comm. Option board can not recognize inverter. Replace the board. **ON –** It means Modbus/TCP option EEPRom is faulty. Replace the board.
Speed	Green	**ON –** means Comm. Speed is 100Mbps. **OFF –** means Comm. Speed is 10Mbps.
Link	Green	**ON –** means it is ready to do communication. **OFF –** If communication cable wiring is incorrect, Link LED becomes OFF. Check communication Cable.

www.aksaotomasyon.com
AKSA OTOMASYON