The Best Choice for the Most Benefit!

LSIS always tries its best to bring the greatest benefit to its customers.

AC SERVO DRIVE

XGT Servo

XDL-L7S Series User Manual

Safety Precautions

- Read all safety precautions before using this product.
- After reading this manual, store it in a readily accessible location for future reference.

www.lsis.com

Introduction

Hello. Thank you for choosing LSIS XDL-L7 Series.

This user manual describes how to use the product and what precautions to take.

Failure to comply with guidelines may cause injury or product damage. Be sure to read this user manual before you use the product and follow all guidelines.

- The contents of this manual are subject to change without prior notice depending on software versions.
- No reproduction of part or all of the contents of this manual in any form, by any means or for any purpose, shall be permitted without the explicit written consent of LSIS.
- The patent, trademark, copyright and other intellectual property rights in this user manual are reserved by LSIS. No use for purposes other than those related to the product of LSIS shall be authorized.

Safety Precautions

Safety precautions are categorized as either Danger or Caution, depending on the seriousness of the precaution.

Precautions	Definition
Danger	Failure to comply with guidelines may cause death or serious injury.
Caution	Failure to comply with guidelines may cause injury or property damage.

- Certain conditions that are listed as Caution may also result in serious injury.

■ Electric Shock Precautions

Danger

- Before wiring or inspection tasks, turn off the power. Wait 15 minutes until the charge lamp goes off, and then check the voltage.
- Be sure to ground both the servo drive and the servo motor.
- Only specifically trained professional engineers are permitted to perform wiring tasks.
- Perform wiring tasks after you install both the servo drive and the servo motor.
- Do not operate the device with wet hands.
- Do not open the servo drive cover while in operation.
- Do not operate the device with the servo drive cover removed.
- Even if the power is off, do not remove the servo drive cover.

■ Fire Prevention Precautions

Caution

- Install the servo drive, the servo motor, and the regenerative resistance on non-combustible material.
- In case of servo drive malfunction, disconnect the input power.

■ Installation Precautions

Store and use the product in an environment as follows:

Environment	Conditions	
	Servo Drive	Servo Motor
Usage temp.	0 ~ 50 ℃	0 ~ 40 ℃
Storage temp.	-20 ~ 65 ℃	-20 ~ 60 ℃
Usage humidity	Below 90% RH (non-condensing)	Below 80% RH
Storage humidity		Below 90% RH
Altitude	Below 1000 m	
Spacing	▪ When installing 1 unit: • More than 40 mm space at the top and bottom of the control panel • More than 10 mm space at the left and right sides of the control panel ▪ When installing 2 or more units: • More than 100 mm space at the top of the control panel • More than 40 mm space at the bottom of the control panel • More than 30 mm space at the left and right sides of the control panel • More than 2 mm between units • Refer to "2.2.2 Installation Inside the Control Panel."	
Others	▪ Install in a location free from iron, corrosive gas, and combustible gas. ▪ Install in a location free from vibration or shock.	

⚠ Caution

- Make sure that the installation orientation is correct.
- Do not drop the product or expose it to excessive shock.
- Install in a location that is free from water, corrosive gas, combustible gas, or flammable material.
- Install in a location that can support the weight of the product.
- Do not stand on the product or place heavy objects on top of it.
- Be sure to maintain the specified spacing when you install the servo drive.
- Be sure not to get conductive or flammable debris inside either the servo drive or the servo motor.
- Firmly fix the servo motor onto the machine.
- Be sure to install a servo motor with a gearbox in the specified direction.
- Do not touch the rotating unit of the servo motor while you operate the machine.
- Do not apply excessive shock when you connect a coupling to the servo motor shaft.
- Do not place a load on the servo motor shaft that is heavier than specified.

■ Wiring Precautions

⚠ Caution
▪ Be sure to use AC 200-230 V for the input power of the servo drive. ▪ Be sure to connect the servo drive ground terminal. ▪ Do not connect commercial power directly to the servo motor. ▪ Do not connect commercial power directly to the U, V, and W output terminal of the servo drive. ▪ Directly connect U, V, W output terminals of the servo drive and U, V, W input terminals of the servo motor, but do not install a magnetic contactor between the wiring. ▪ Be sure to use a pressurized terminal with an insulation tube when you connect the power terminal for the servo drive. ▪ When wiring, be sure to separate the U, V, and W cables for the servo motor power and encoder cable. ▪ Be sure to use robotic cable if the motor requires movement. ▪ Before you perform power line wiring, turn off the input power of the servo drive, and then wait until the charge lamp goes off completely. ▪ Be sure to use shielded twisted-pair wire for the pulse command signal (PF+, PF-, PR+, PR-), speed command signal (SPDCOM), and torque command signal (TRQCOM).

■ Precautions for Initial Operation

⚠ Caution
▪ Check the input voltage (AC 200-230 V) and power unit wiring before you turn on the power. ▪ The servo must be in the OFF mode when you turn on the power. ▪ Before you turn on the power, check the motor's ID and the encoder pulse for XDL-L7 □A □□□A. ▪ Set the motor ID ([P0-00]) and the encoder pulse ([P0-02]) for XDL-L7 □A □□□A first after you turn on the power. ▪ After you complete the above settings, set the drive mode for the servo drive that is connected to the upper level controller to [P0-03]. ▪ Refer to Chapter 1.2 "System Configuration" to perform CN1 wiring for the servo drive according to each drive mode. ▪ You can check the ON/OFF state for each input terminal of CN1 at [St-14].

■ Precautions for Handling and Operation

⚠ Caution
▪ Check and adjust each parameter before operation. ▪ Do not touch the rotating unit of the motor during operation. ▪ Do not touch the heat sink during operation. ▪ Be sure to attach or remove the CN1 and CN2 connectors when the power is off. ▪ Extreme change of parameters may cause system instability.

■ Precautions for Use

⚠ Caution
▪ Install an emergency stop circuit on the outside to immediately stop operation if necessary. ▪ Reset the alarm when the servo is off. Be warned that the system restarts immediately if the alarm is reset while the servo is on. ▪ Minimize electromagnetic interference by using a noise filter or DC reactor. Otherwise, adjacent electrical devices may malfunction because of the interference. ▪ Use only the specified combinations of servo drive and servo motor. ▪ The electric brake on the servo motor keeps the motor at a standstill. Do not use it for ordinary braking. ▪ The electric brake may not function properly depending on the brake lifespan and mechanical structure (for example, if the ball screw and servo motor are combined via the timing belt). Install an emergency stop device to ensure mechanical safety.

■ Malfunction Precautions

⚠ Caution
▪ For potentially dangerous situations that may occur during emergency stop or device malfunction, use a servo motor with an electric brake, or separately install a brake system on the outside. ▪ In case of an alarm, solve the source of the problem. After you solve the problem and ensure safety, deactivate the alarm and start operation again. ▪ Do not get close to the machine until the problem is solved.

■ Precautions for Repair/Inspection

⚠ Caution
▪ Before performing servicing tasks, turn off the power. Wait 15 minutes until the charge lamp goes off, and then check the voltage. Voltage may remain in the condenser even after you turn off power and may cause an electric shock. ▪ Only authorized personnel are permitted to perform repair, inspection or replacement of parts. ▪ Do not modify the product.

■ General Precautions

⚠ Caution
▪ This user manual is subject to change upon product modification or standards changes. In case of such changes, the user manual will be issued with a new product number.

■ Product Application

⚠ Caution
▪ This product is not designed or manufactured for machines or systems that are used in situations related to human life. ▪ This product is manufactured under strict quality control. However, be sure to install safety devices when applying the product to a facility where a malfunction in the product might cause a major accident or significant loss.

■ EEPROM Lifespan

⚠ Caution
▪ EEPROM is rewritable up to 1 million times for the purpose of, among others, recording parameter settings. The servo drive may malfunction depending on the lifespan of EEPROM when the total counts of the following tasks exceed 1 million. • EEPROM recording as a result of parameter changes • EEPROM recording as a result of alarm trigger

■ Responding to international regulations

XDL-L7 Series responds to international regulations with standard models.

Model(Note1)	Low Voltage Directive	EMC Directive
XDL-L7SA001X XDL-L7SA002X XDL-L7SA004X XDL-L7SA008X XDL-L7SA010X XDL-L7SA020X XDL-L7SA035X XDL-L7SA050X	EN61800-5-1	EN61800-3

Note1) X = A or B: A = Quadrature Encoder Type, B = Serial Encoder Type.

※1: For more information, please feel free to ask LSIS.

※2: Please follow the regulations of destination when exporting.

Table of Contents

Introduction iii

Safety Precautions iv

Table of Contents ix

1. Product Components and Signals 2-1

1.1 Product Components 2-1

1.1.1 Product Verification 2-1

1.1.2 Part Names 2-3

1.2 System Configuration 2-8

1.2.1 Overview 2-8

1.2.2 Wiring Diagram of the Entire CN1 Connector 2-10

1.2.3 Example of Position Operation Mode Wiring 2-11

1.2.4 Example of Speed Operation Mode Wiring 2-12

1.2.5 Example of Torque Operation Mode Wiring 2-13

1.2.6 Examples of Speed / Position Operation Mode Wiring 2-14

1.3 Signal 2-17

1.3.1 Digital Input Contact Signal 2-17

1.3.2 Analog Input Contact Signal 2-18

1.3.3 Digital Output Contact Signal 2-18

1.3.4 Monitor Output Signal and Output Power 2-19

1.3.5 Pulse Train Input Signal 2-19

1.3.6 Encoder Output Signal 2-20

2 Installation 2-1

2.1 Servo Motor 2-1

2.1.1 Usage Environment 2-1

2.1.2 Prevention of Excessive Impact 2-1

2.1.3 Motor Connection 2-1

2.1.4 Load Device Connection 2-2

2.1.5 Cable Installation 2-2

2.2 Servo Drive 2-3

2.2.1 Usage Environment 2-3

2.2.2 Installation Inside the Control Panel 2-4

2.2.3 Power Wiring 2-5

3 Wiring Method 3-1

3.1 Internal Block Diagram 3-1

3.1.1 XDL-L7 Drive Block Diagram [XDL-L7SA001□ - XDL-L7SA004□] 3-1

3.1.2 XDL-L7 Drive Block Diagram [XDL-L7SA008□ - XDL-L7SA035□] 3-2

3.1.3 XDL-L7 Drive Block Diagram [XDL-L7SA050□] 3-3

3.2 Power Wiring 3-4

3.2.1 XDL-L7 Drive Wiring Diagram [XDL-L7SA001□ - XDL-L7SA035□] 3-4

3.2.2 XDL-L7 Drive Wiring Diagram [XDL-L7SA050□] 3-5

3.2.3 Dimensions for Power Circuit Electrical Parts 3-6

3.3 Example of connecting to PLC 3-10

3.4 Timing Diagram 3-17

3.4.1 Timing Diagram During Power Input 3-17
3.4.2 Timing Diagram at the Time of Alarm Trigger 3-18

3.5 Control Signal Wiring 3-19
3.5.1 Contact Input Signal 3-19
3.5.2 Contact Output Signal 3-20
3.5.3 Analog Input/Output Signals 3-21
3.5.4 Pulse Train Input Signal 3-22
3.5.5 Encoder Output Signal 3-23

3.6 Quadrature Encoder Signaling Unit (CN2) Wiring 3-24
3.6.1 XLCS-E□□□AS Cable 3-24
3.6.2 XLCS-E□□□BS Cable 3-24

3.7 Serial Encoder Signaling Unit (CN2) Wiring 3-25
3.7.1 XLCS-E□□□CS Cable 3-25

3.8 Multi Turn Encoder signal unit(CN2) wiring 3-27
3.8.1 XLCS-E□□□CS1 Cable 3-27
3.8.2 XLCS-E□□□DS1 Cable 3-27
3.8.3 XLCS-E□□□ES1 Cable 3-28

3.9 Transmission of Absolute Encoder Data 3-29
3.9.1 Transmission of Absolute Encoder Data 3-29

4 Parameters 4-1

4.1 How to Use the Loader 4-1
4.1.1 Names and Functions of Each Parts 4-1
4.1.2 Status Summary Display 4-2
4.1.3 Parameter Handling 4-4
4.1.4 Data Display 4-8
4.1.5 External Input Contact Signal Display [St-14] 4-10
4.1.6 External Input Signal and Logic Definition 4-11
4.1.7 External Output Contact Signal Display [St-15] 4-19
4.1.8 External Output Signal and Logic Definition 4-20

4.2 Parameter Description 4-26
4.2.1 Parameter System 4-26
4.2.2 Operation Status Display Parameter 4-27
4.2.3 System Setting Parameter 4-30
4.2.4 Control Setting Parameter 4-34
4.2.5 Input/Output Setting Parameter 4-38
4.2.6 Speed Operation Setting Parameter 4-41
4.2.7 Position Operation Setting Parameter 4-43
4.2.8 Operation Handling Parameter 4-46

4.3 Operation Status Display 4-50
4.3.1 Status Display [St-00] 4-50
4.3.2 Speed Display 4-50
4.3.3 Position Display 4-50
4.3.4 Torque and Load Display 4-50
4.3.5 I/O Status Display 4-51
4.3.6 Miscellaneous Status and Data Display 4-51
4.3.7 Version Display 4-52

4.4 Parameter Setting 4-53
4.4.1 System Parameter Setting 4-53

4.4.2 Control Parameter Setting....4-56
4.4.3 Analog Input/Output Parameter Setting....4-61
4.4.4 Input/Output Contact Point Parameter Setting....4-62
4.4.5 Speed Operation Parameter Setting....4-65
4.4.6 Position Operation Parameter Setting....4-66

4.5 Alarms and Warnings....4-68
4.5.1 Servo Alarm Status Summary Display List....4-68
4.5.2 Servo Warning Status Summary Display List....4-70

4.6 Motor Type and ID (to be continued on the next page)....4-71

5 Handling and Operation....5-1

5.1 What to Check Before Operation....5-1
5.1.1 Wiring Check....5-1
5.1.2 Drive Signal (CN1) Wiring Check....5-1
5.1.3 Surrounding Environment Check....5-1
5.1.4 Machine Status Check....5-1
5.1.5 System Parameter Check....5-2

5.2 Handling....5-3
5.2.1 Manual JOG Operation [Cn-00]....5-3
5.2.2 Program JOG Operation [Cn-01]....5-5
5.2.3 Alarm Reset [Cn-02]....5-6
5.2.4 Reading Alarm History [Cn-03]....5-7
5.2.5 Alarm History Reset [Cn-04]....5-8
5.2.6 Auto Gain Tuning [Cn-05]....5-9
5.2.7 Phase Z Search Operation [Cn-06]....5-10
5.2.8 Input Contact Forced ON/OFF [Cn-07]....5-11
5.2.9 Output Contact Forced ON/OFF [Cn-08]....5-13
5.2.10 Parameter Reset [Cn-09]....5-15
5.2.11 Automatic Speed Command Offset Correction [Cn-10]....5-16
5.2.12 Automatic Torque Command Offset Correction [Cn-11]....5-17
5.2.13 Manual Speed Command Offset Correction [Cn-12]....5-18
5.2.14 Manual Torque Command Offset Correction [Cn-13]....5-19
5.2.15 Absolute Encoder Reset [Cn-14]....5-20
5.2.16 Instantaneous Maximum Load Factor Initialization [Cn-15]....5-21
5.2.17 Parameter Lock [Cn-16]....5-22
5.2.18 Current Offset[Cn-17]....5-23

6 Communication Protocol....6-1

6.1 Overview and Communication Specifications....6-1
6.1.1 Overview....6-1
6.1.2 Communication Specifications and Cable Access Rate....6-2

6.2 Communication Protocol Base Structure....6-3
6.2.1 Sending/Receiving Packet Structure....6-3
6.2.2 Protocol Command Codes....6-5

6.3 XDL-L7 Servo Drive Communication Address Table....6-10
6.3.1 Operation Status Parameter Communication Address Table....6-10
6.3.2 System Parameter Communication Address Table....6-12
6.3.3 Control Parameter Communication Address Table....6-14
6.3.4 Input/Output Parameter Communication Address Table....6-16
6.3.5 Speed Operation Parameter Communication Address Table....6-17

6.3.6 Position Operation Parameter Communication Address Table 6-18

7 Product Specifications 7-1

7.1 Servo Motor 7-1

7.1.1 Product Features 7-2

7.1.2 Outline Drawing 7-33

7.2 Servo Drive 7-50

7.2.1 Product Features 7-50

7.2.2 Outline Drawing 7-52

7.3 Options and Peripheral Devices 7-54

8 Maintenance and Inspection 8-1

8.1 Maintenance and Inspection 8-1

8.1.1 Precautions 8-1

8.1.2 What to Inspect 8-1

8.1.3 Parts Replacement Cycle 8-2

8.2 Diagnosis of Abnormality and Troubleshooting 8-3

8.2.1 Servo Motor 8-3

8.2.2 Servo Drive 8-4

9 Appendix 9-17

9.1 Motor Type and ID (to be continued on the next page) 9-17

9.2 Test Drive Procedure 9-20

User Manual Revision History 9-24

1. Product Components and Signals

1.1 Product Components

1.1.1 Product Verification

1. Check the name tag to verify that the product received matches the model ordered.
   - Does the format of the servo drive's name tag match?
   - Does the format of the servo motor's name tag match?
2. Check the product and options.
   - Are the type and length of the cables correct?
   - Does the regenerative resistance conform to the required standard?
     - Is the shape of the shaft end correct?
     - Is there any abnormality when the oil seal or brake is mounted?
     - Are the gearbox and the gear ratios correct?
     - Is the encoder format correct?
3. Check the exterior of the device.
   - Is there any foreign substance or humidity?
   - Is there any discoloring, contamination, damage or disconnection of wires?
   - Are the bolts at joints fastened sufficiently?
   - Is there any abnormal sound or excessive friction during rotation?

■ **Servo Drive Product Format**

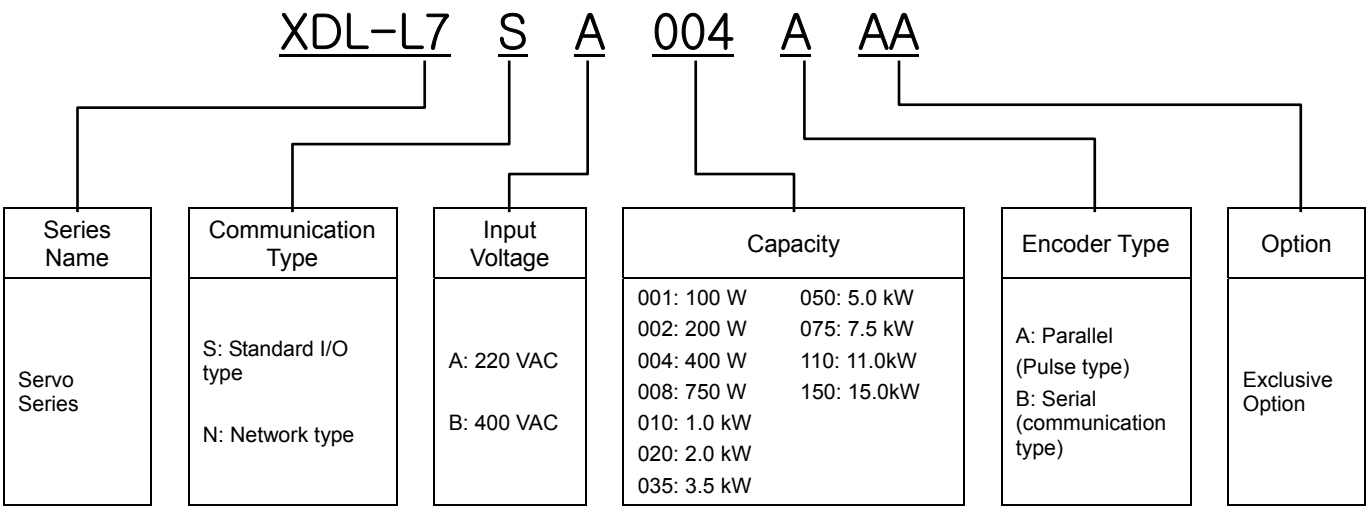

■ Servo Motor Product Format

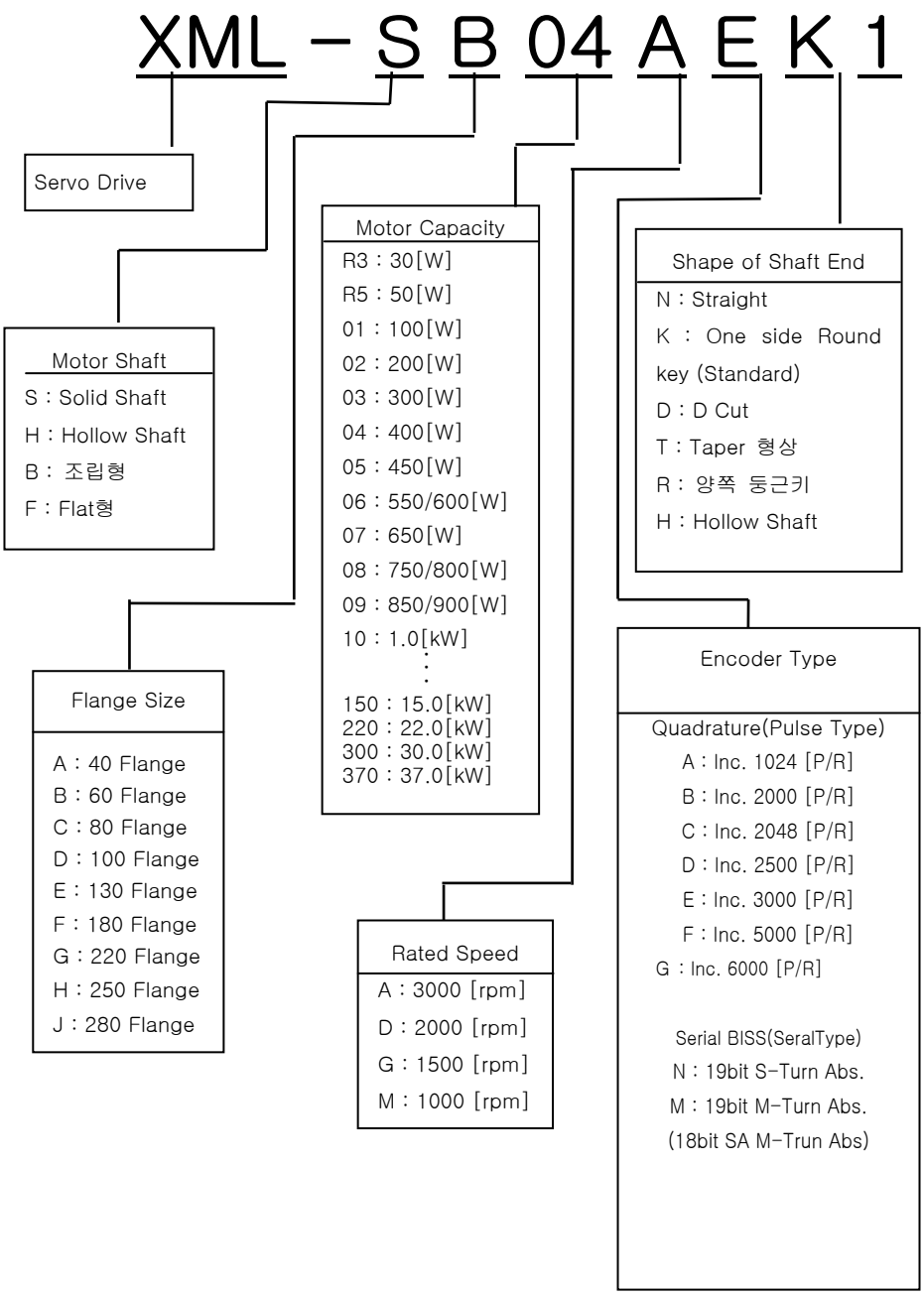

1.1.2 Part Names

■ Servo Motor

- 80 Flange or below

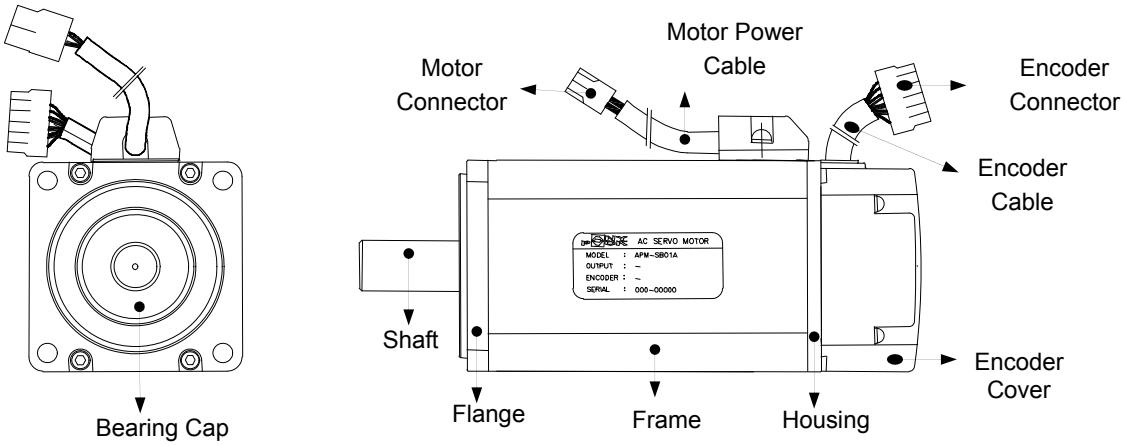

- 80 Flange or below(Flat Type)

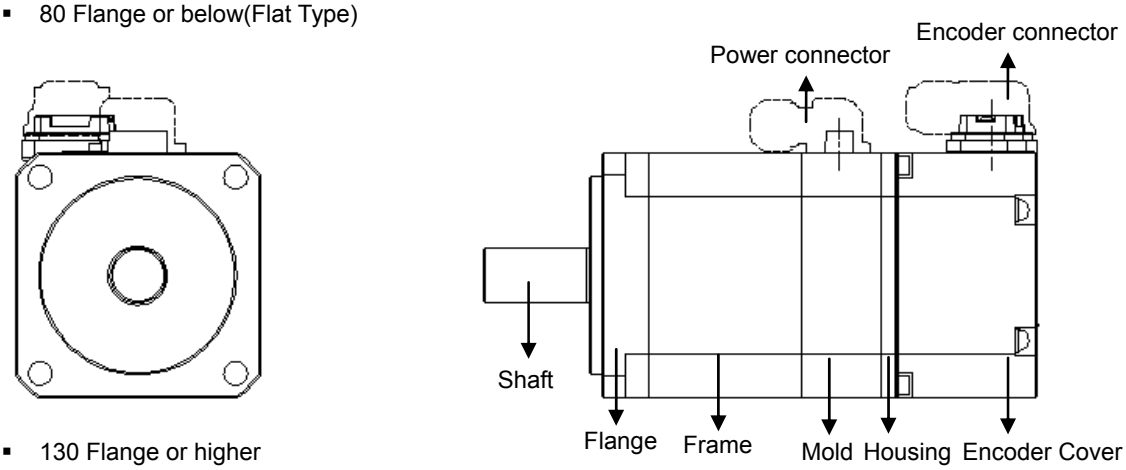

- 130 Flange or higher

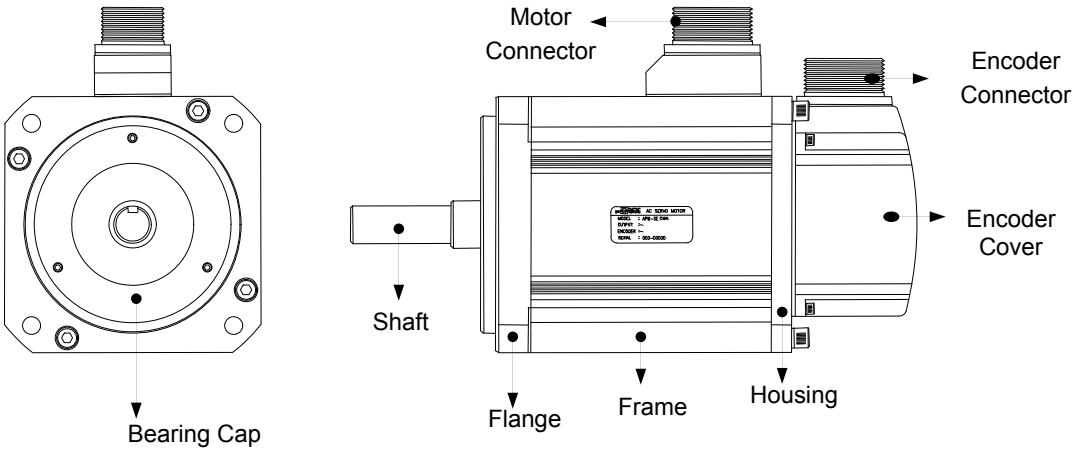

■ Servo Drive

- XDL-L7SA 001□, XDL-L7SA 002□, XDL-L7SA 004□

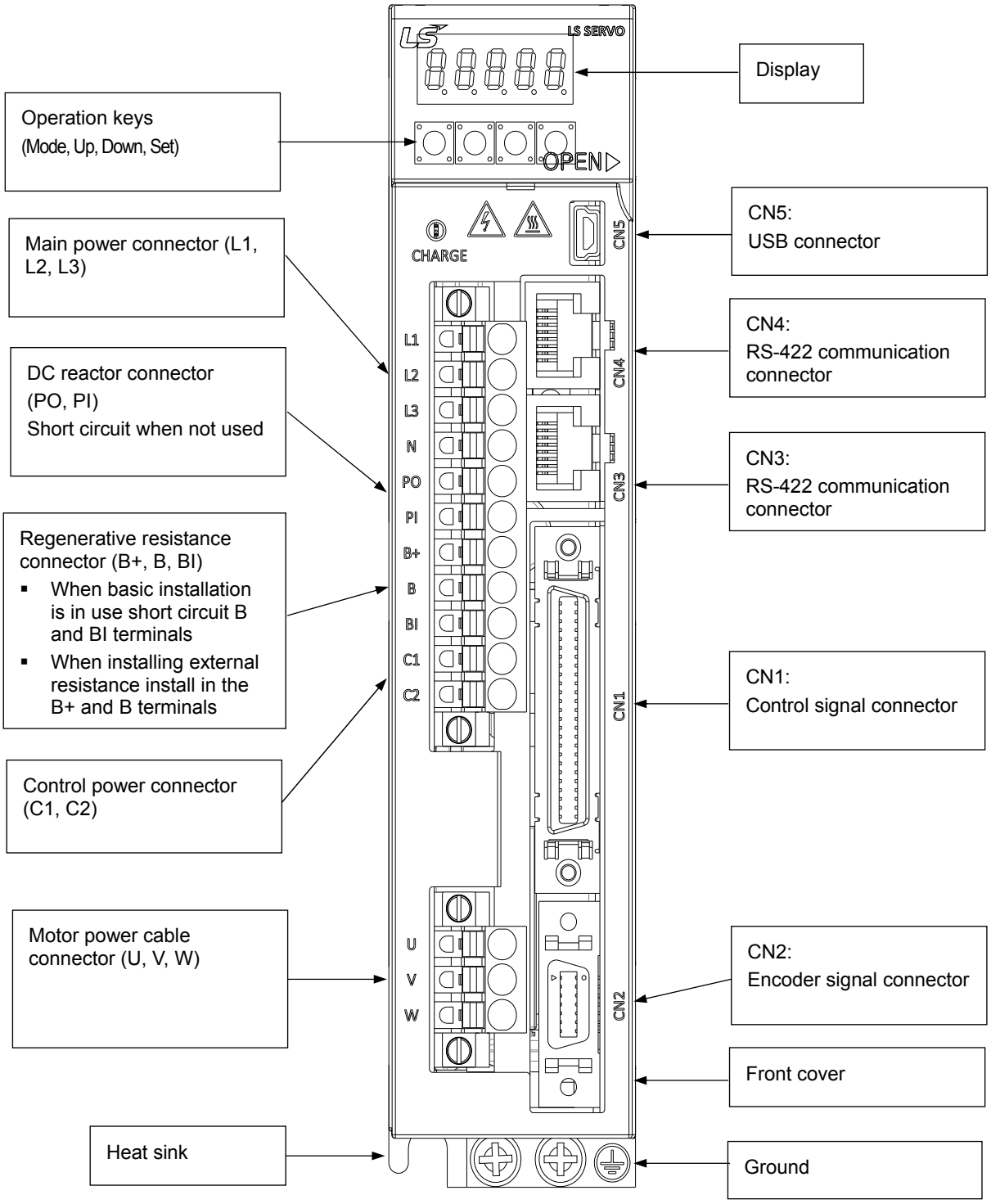

- XDL-L7SA 008□, XDL-L7SA 010□

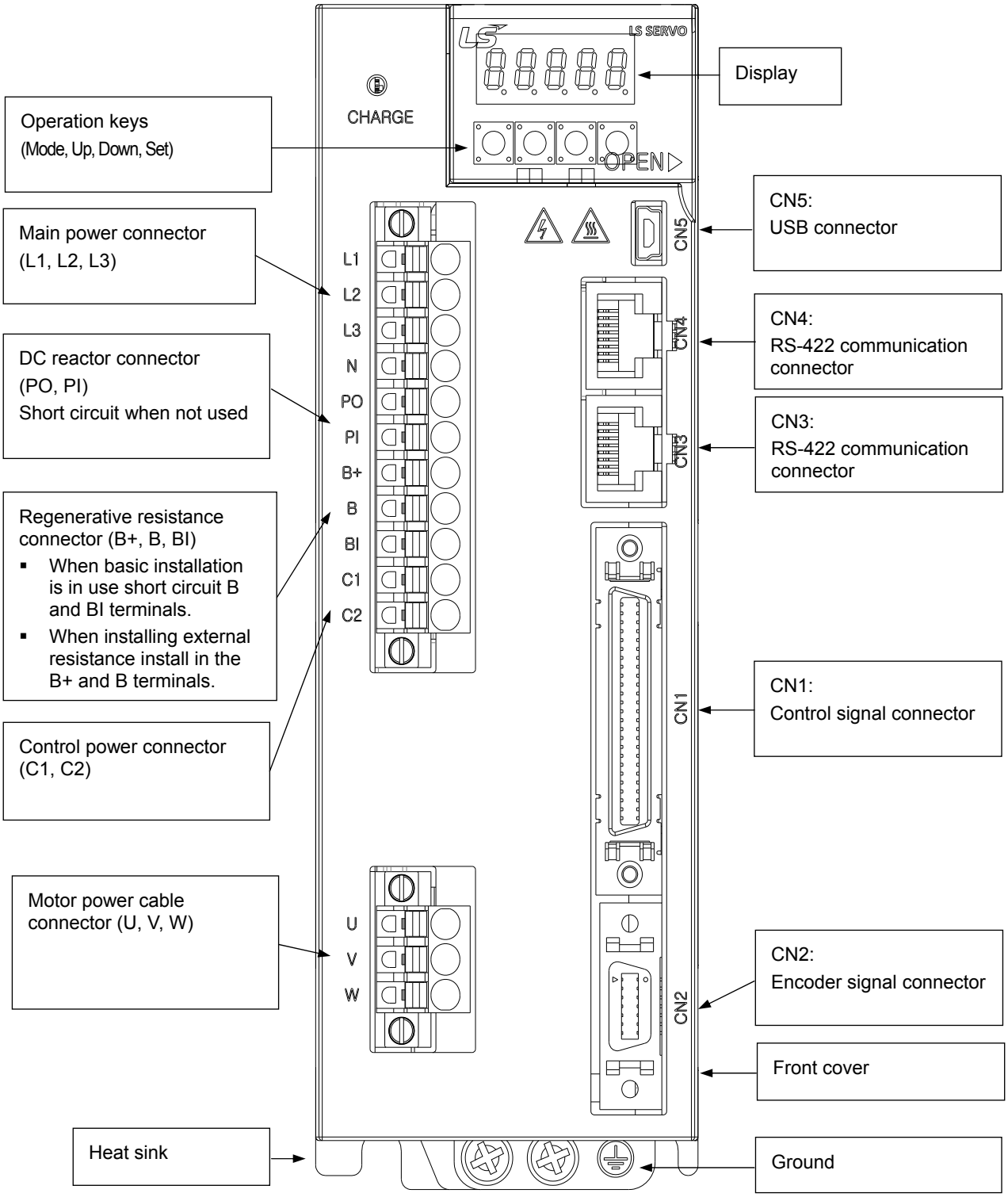

- XDL-L7SA 020□, XDL-L7SA 035□

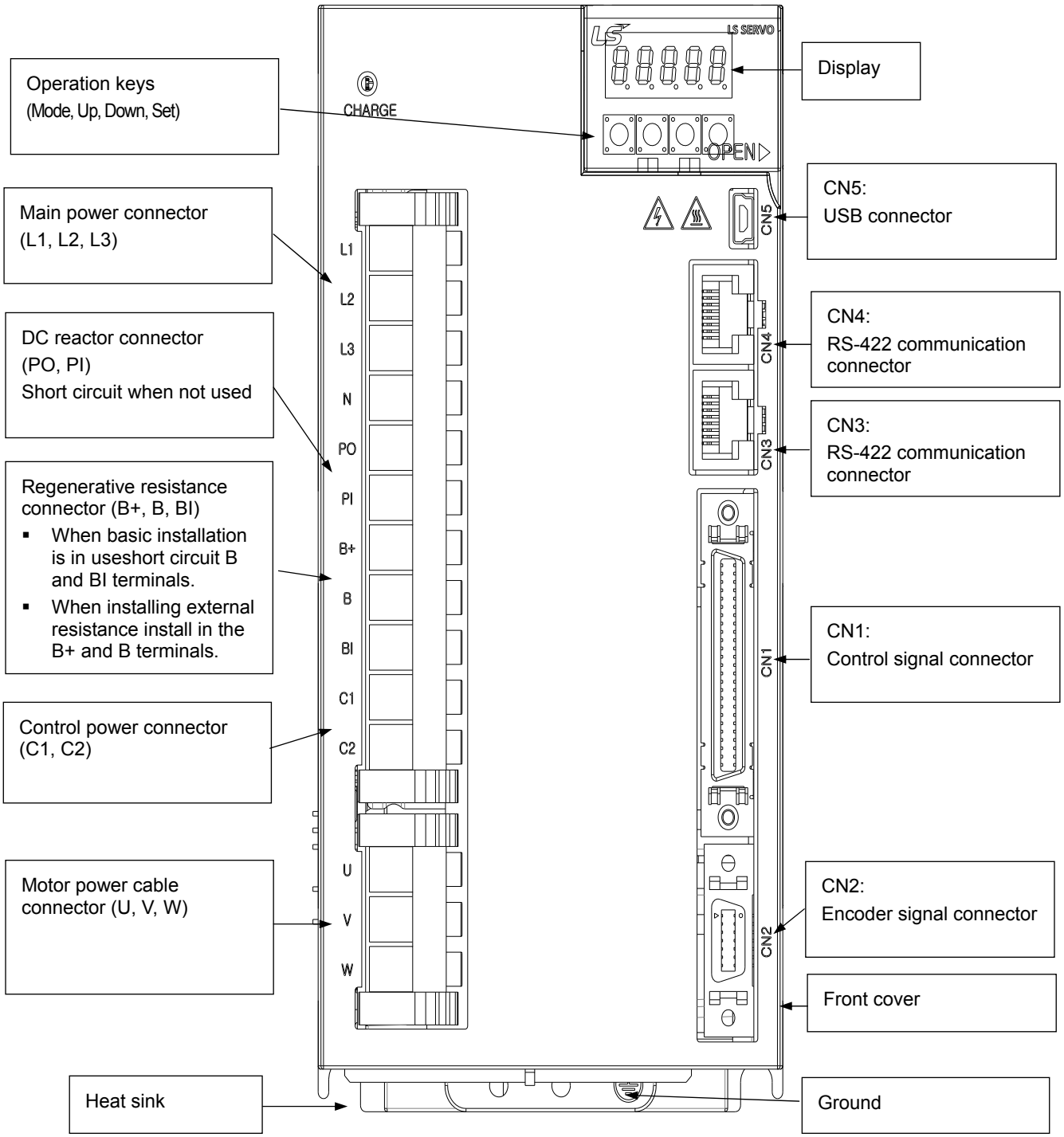

- XDL-L7SA 050□

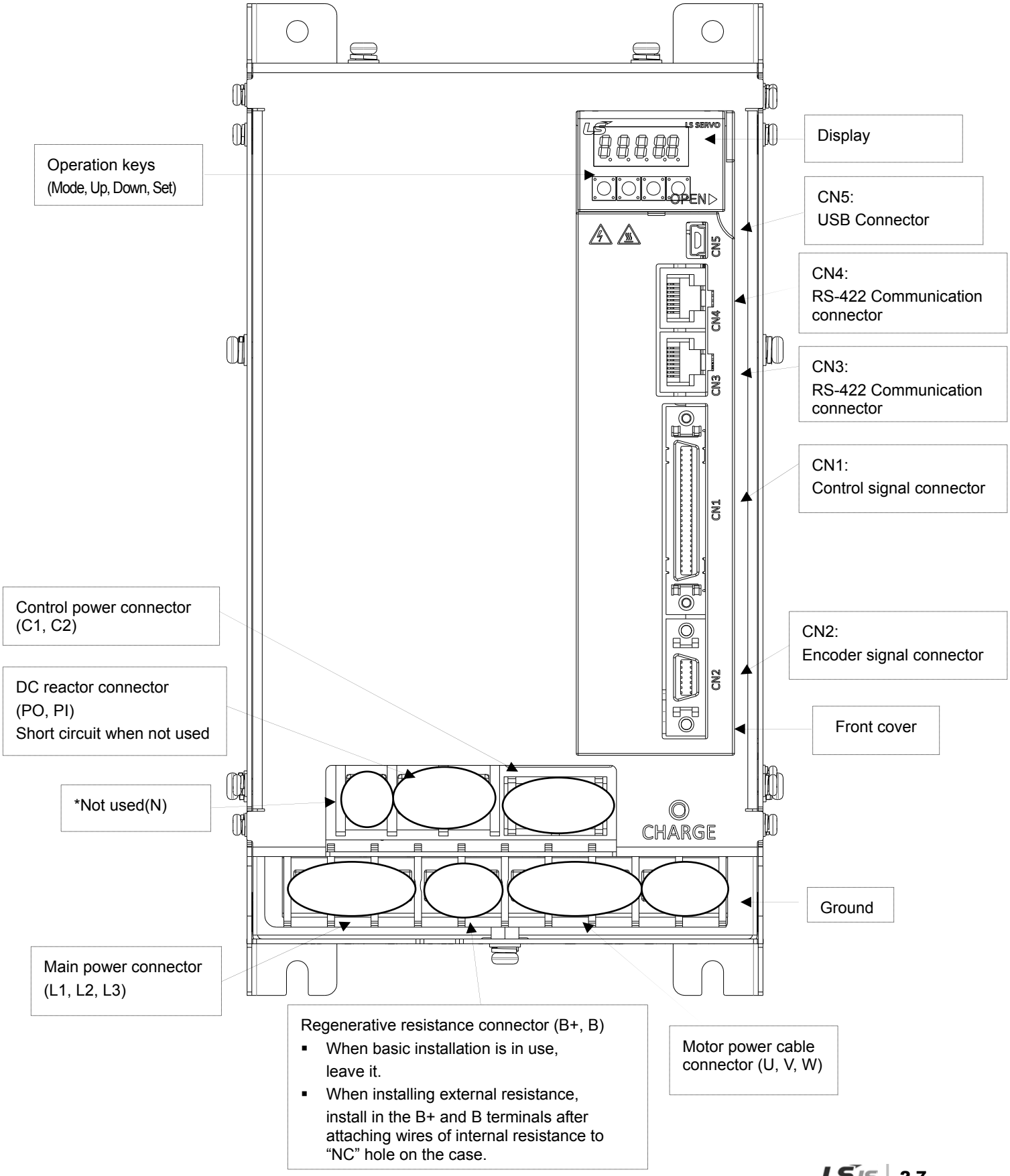
Display
Operation keys
(Mode, Up, Down, Set)
CN5:
USB Connector
CN4:
RS-422 Communication connector
CN3:
RS-422 Communication connector
CN1:
Control signal connector
Control power connector
(C1, C2)
CN2:
Encoder signal connector
DC reactor connector
(PO, PI)
Short circuit when not used
Front cover
*Not used(N)
Ground
Main power connector
(L1, L2, L3)
Regenerative resistance connector (B+, B)
When basic installation is in use, leave it.
When installing external resistance, install in the B+ and B terminals after attaching wires of internal resistance to "NC" hole on the case.
Motor power cable connector (U, V, W)
LS SERVO
OPEN
CN5
CN4
CN3
CN1
CN2
CHARGE

1.2 System Configuration

1.2.1 Overview

The XDL-L7 servo system can be configured in various ways depending on its interface with the upper level controller.

(1) Position Operation System

The servo is run by pulse commands. You can change the location of the servo motor by changing command pulses based on a certain transfer unit.

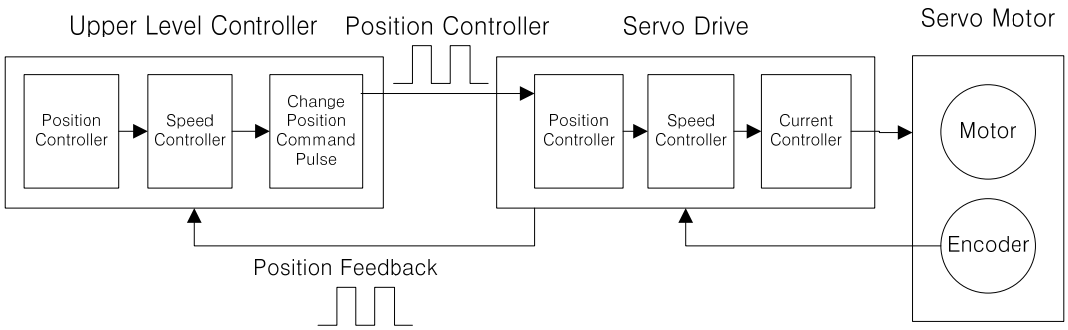

- Advantage: The structure of the upper level controller is simple because pulse input is linked to transfer units.
- Disadvantages:
  - Fast rotation is compromised when a precise transfer unit is used.
  - Response is low because multiple levels of controllers are used.

(2) Speed Operation System

The servo is run by speed commands. There are two types of speed commands: analog voltage command and digital speed command.

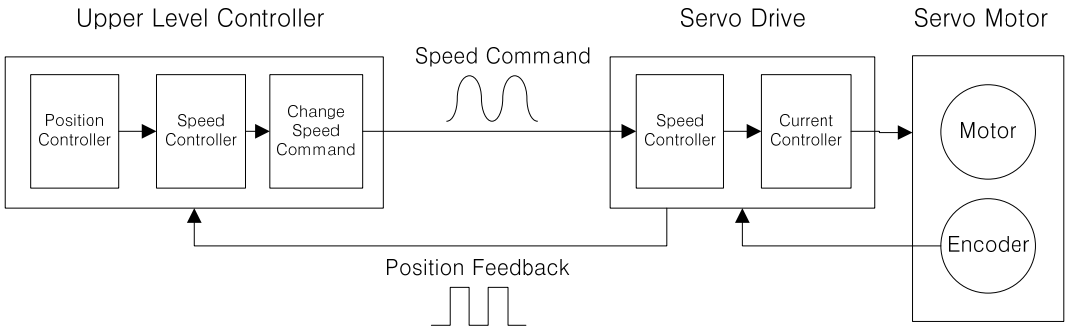

- Advantages:
  - The servo responds quickly.
  - Precision control is easy.
- Disadvantage: The upper level controller is complex.

(3) Torque Operation System

The servo is run by torque commands. Analog voltage-based commands are used.

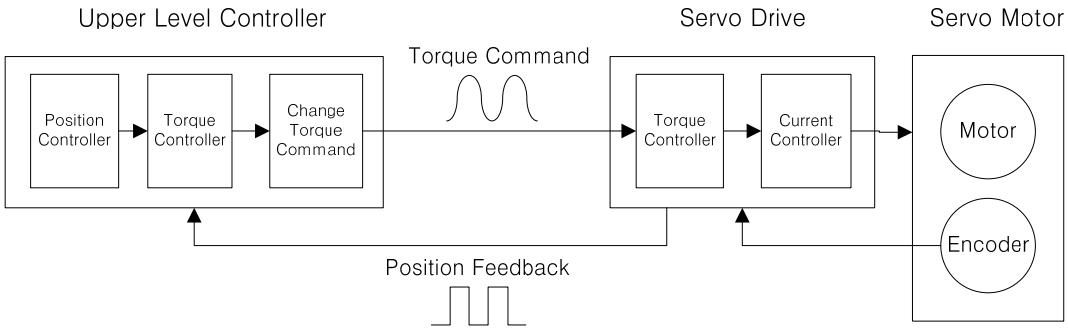

- Advantages:
  - The servo responds quickly.
  - Precise control is easy.
- Disadvantage: The upper level controller is complex.

(4) Operation Mode

The XDL-L7 servo drive can be run in torque, speed and position modes, depending on its interface with the upper level controller. The operation modes can be switched by parameters or digital input contact point.

Operation Mode	System Configuration
0	The servo is run on the torque operation system.
1	The servo is run on the speed operation system.
2	The servo is run on the position operation system.
3	The servo is run with the speed and position operation systems as points of contact.
4	The servo is run with the speed and torque operation systems as points of contact.
5	The servo is run with the position and torque operation systems as points of contact.

1.2.2 Wiring Diagram of the Entire CN1 Connector

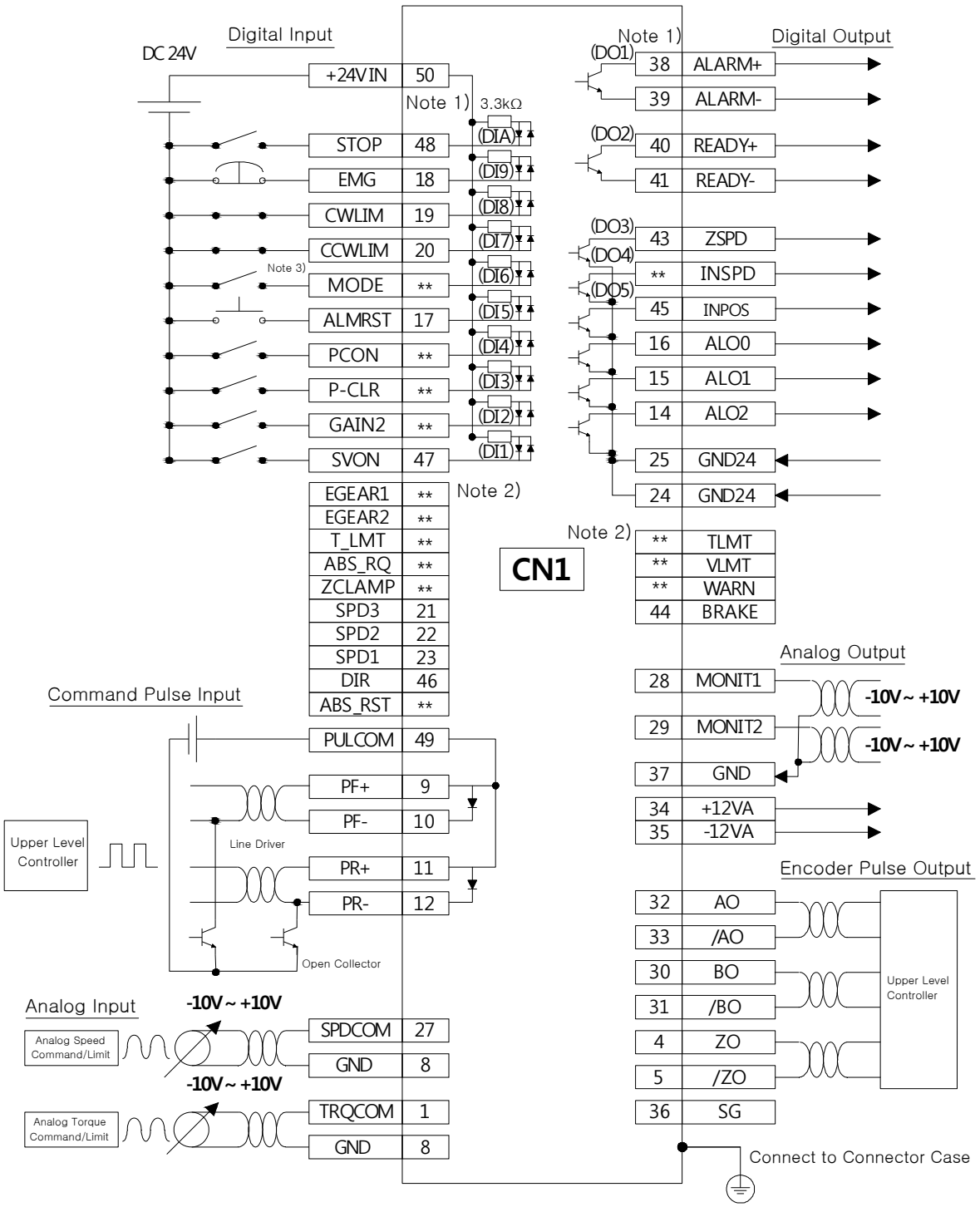

Note 1) Input signals DI1 to DIA and output signals DO1 to DO5 are default signals allocated by the factory.
Note 2) **These are non-allocated signals. You can change their allocation by setting parameters. For information, refer to "4.1.6 External Input Signal and Logic Definition" and "4.1.8 External Output Signal and Logic Definition."
Note 3) Input Contact Mode = ON : Speed Control Mode, Mode = OFF : Position Operation Mode

1.2.3 Example of Position Operation Mode Wiring

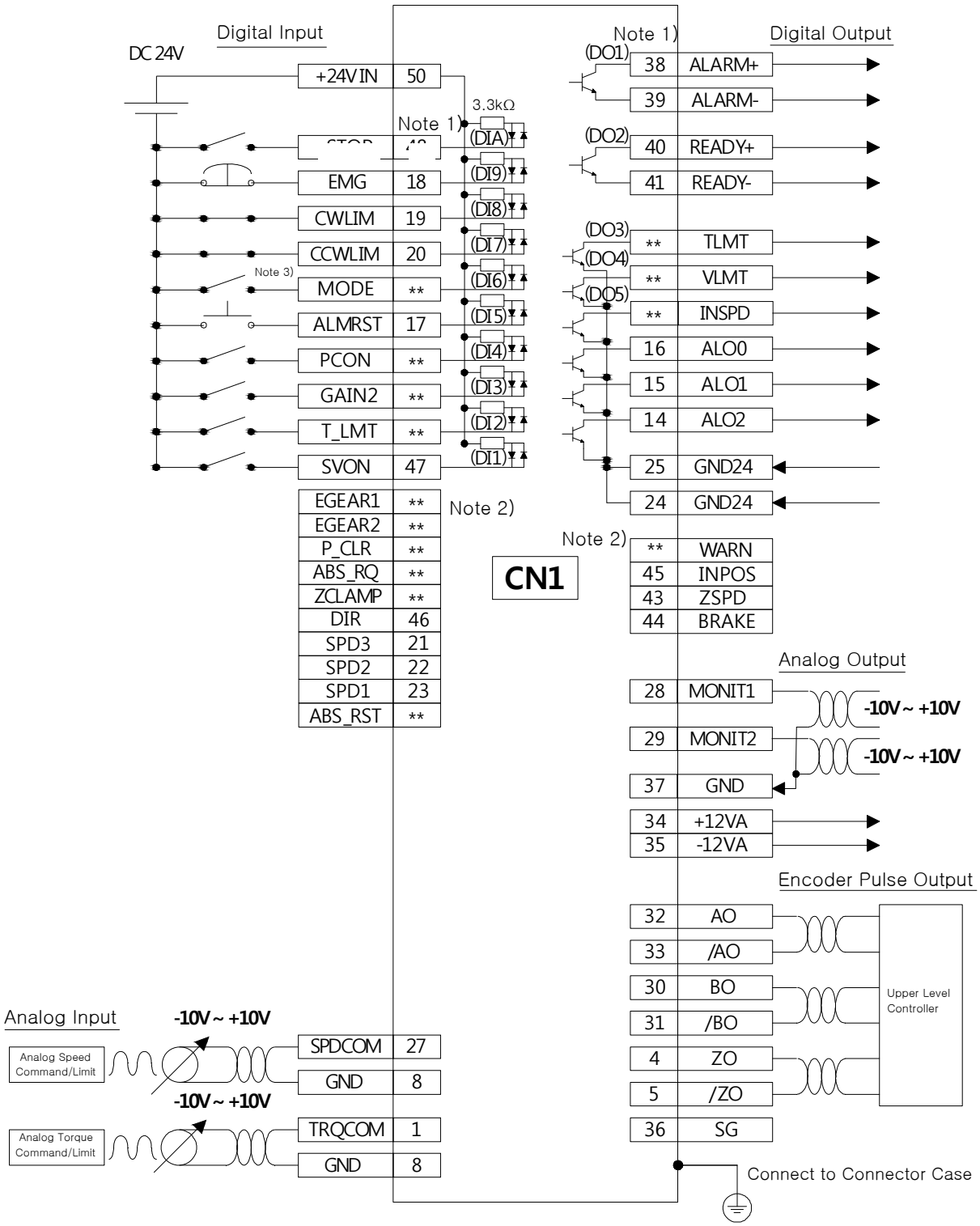

Note 1) Input signals DI1 to DIA and output signals DO1 to DO5 are default signals allocated by the factory.
Note 2) **These are non-allocated signals. You can change their allocation by setting parameters. For information, refer to "4.1.6 External Input Signal and Logic Definition" and "4.1.8 External Output Signal and Logic Definition."
Note 3) Input Contact Mode = ON : Speed Control Mode, Mode = OFF : Torque Operation Mode

1.2.4 Example of Speed Operation Mode Wiring

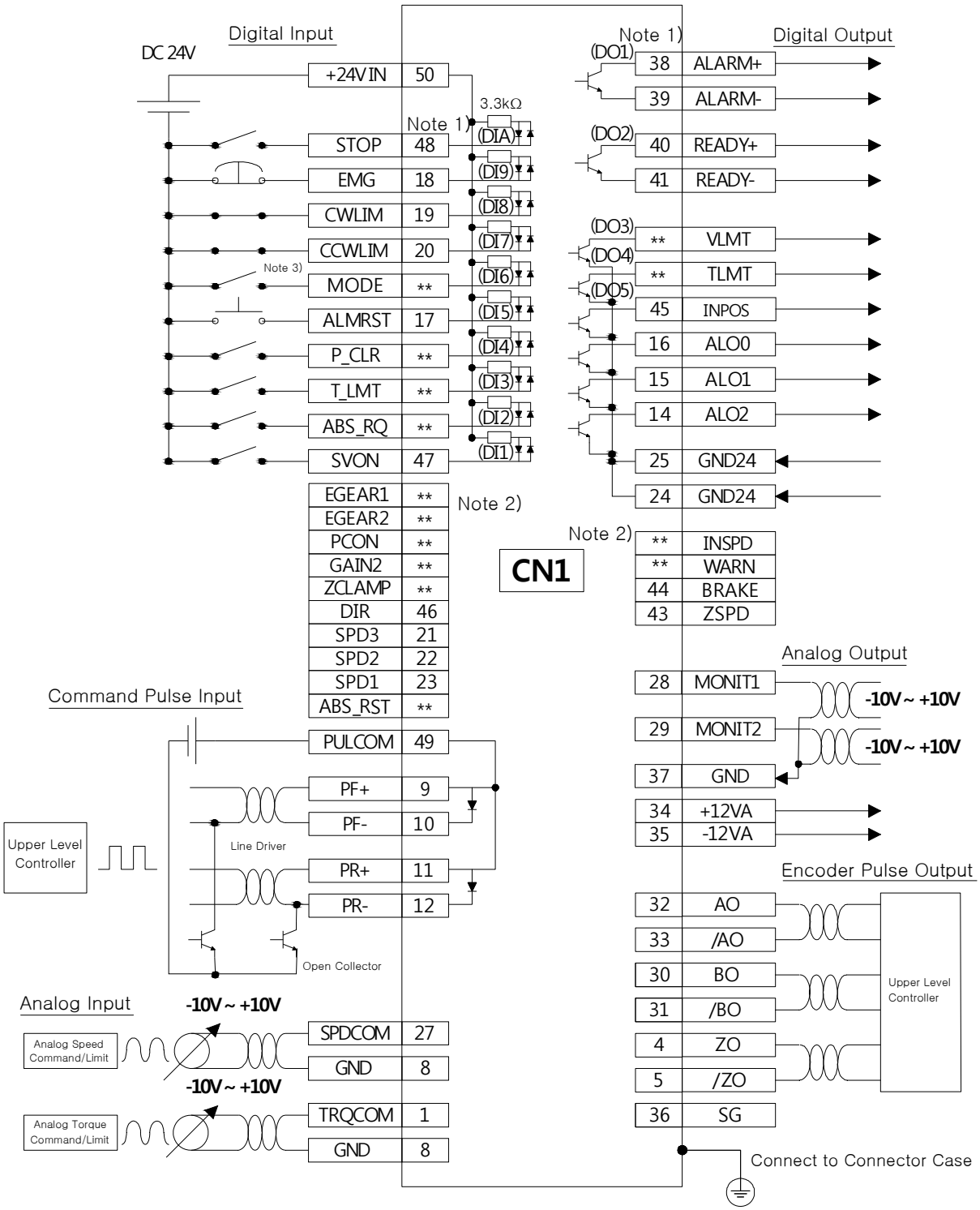

Note 1) Input signals DI1 to DIA and output signals DO1 to DO5 are default signals allocated by the factory.
Note 2) **These are non-allocated signals. You can change their allocation by setting parameters. For information, refer to "4.1.6 External Input Signal and Logic Definition" and "4.1.8 External Output Signal and Logic Definition."
Note 3) Input Contact Mode = ON : Position Control Mode, Mode = OFF : Torque Operation Mode

1.2.5 Example of Torque Operation Mode Wiring

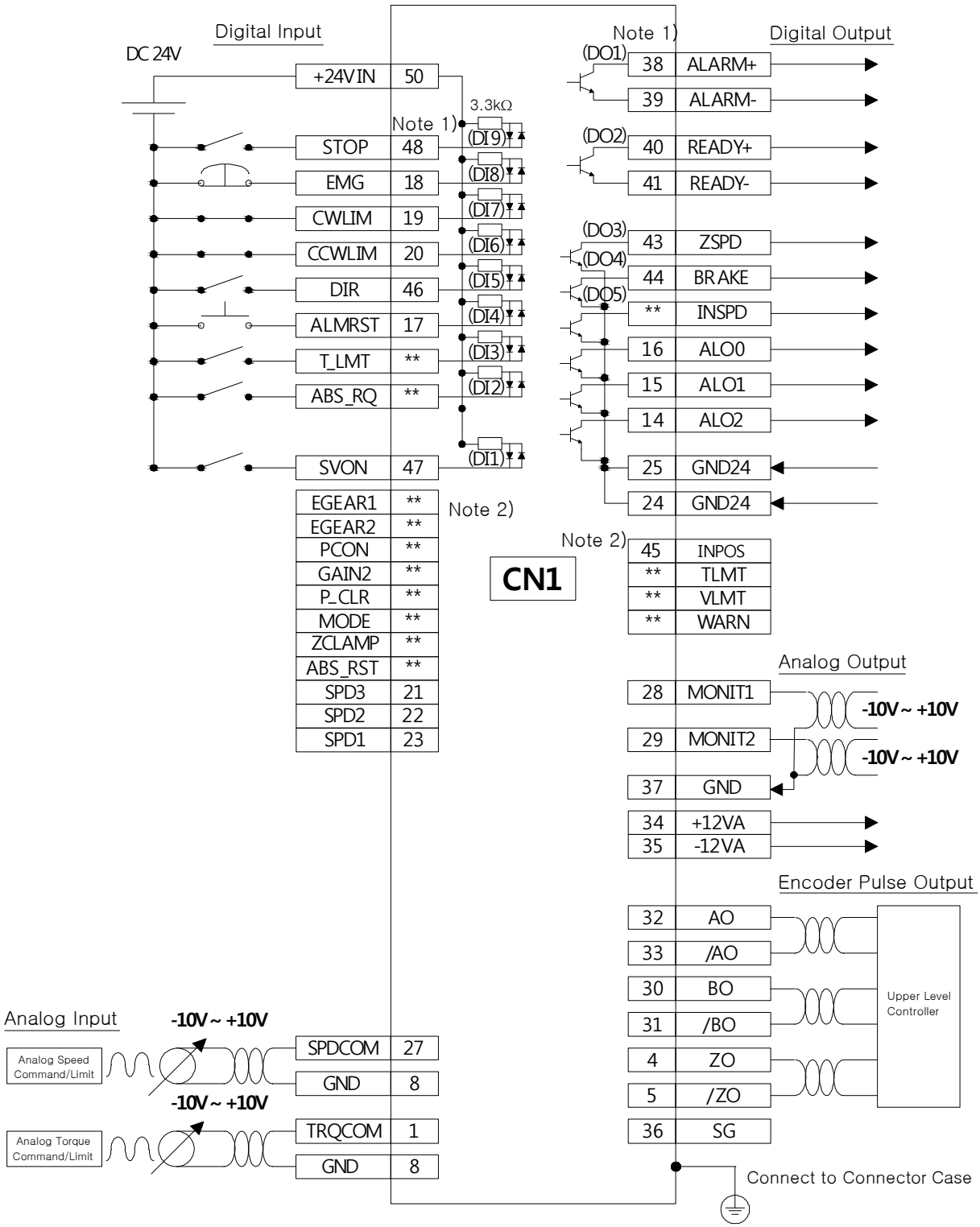

Note 1) Input signals DI1 to DIA and output signals DO1 to DO5 are default signals allocated by the factory.
Note 2) **These are non-allocated signals. You can change their allocation by setting parameters. For information, refer to "4.1.6 External Input Signal and Logic Definition" and "4.1.8 External Output Signal and Logic Definition."

1.2.6 Examples of Speed / Position Operation Mode Wiring

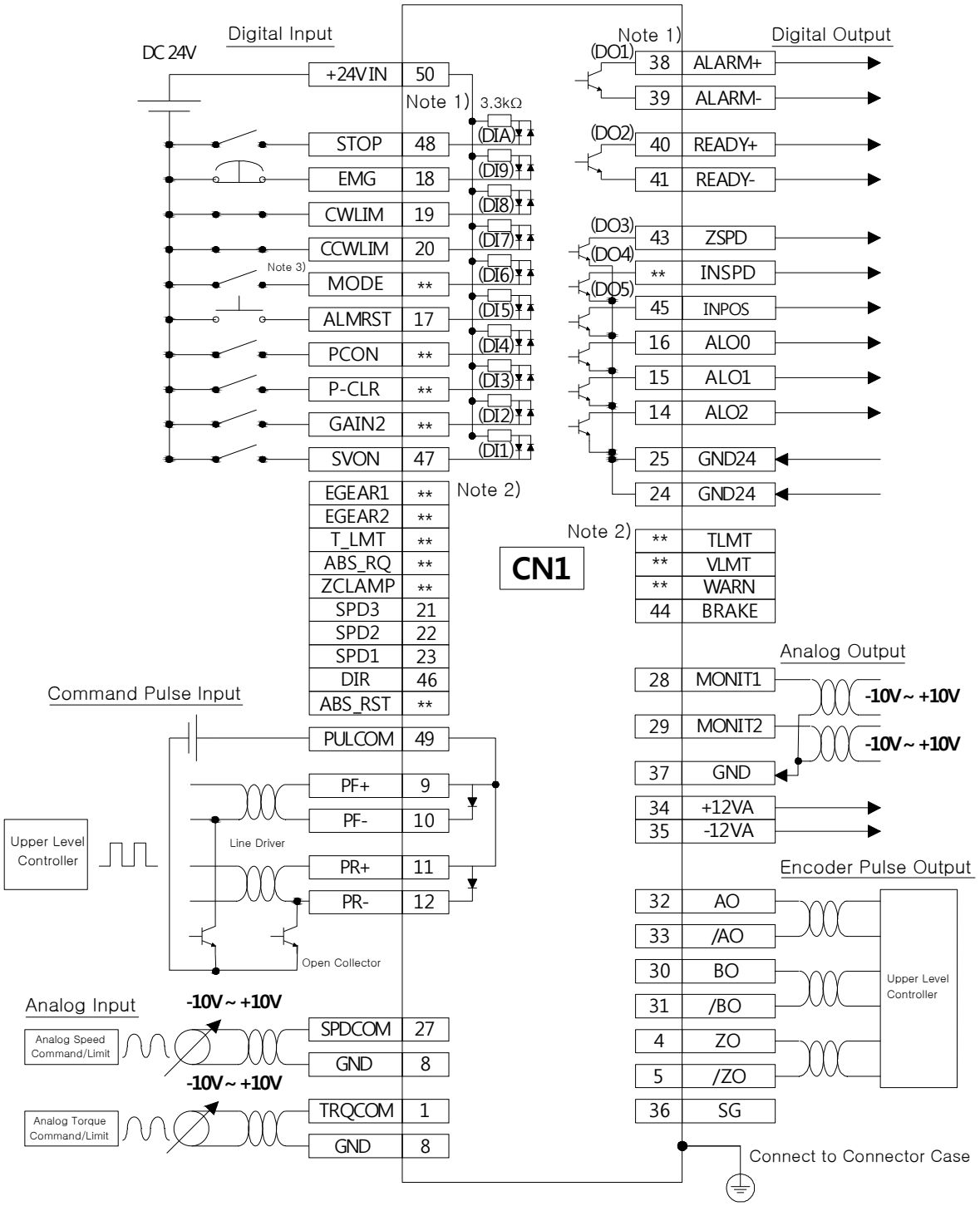

Note 1) Input signals DI1 to DIA and output signals DO1 to DO5 are default signals allocated by the factory.
Note 2) **These are non-allocated signals. You can change their allocation by setting parameters. For information, refer to "4.1.6 External Input Signal and Logic Definition" and "4.1.8 External Output Signal and Logic Definition."
Note 3) Input Contact Mode = ON : Speed Control Mode, Mode = OFF : Position Operation Mode

1.2.7 Example of Speed/Torque Operation Mode Wiring

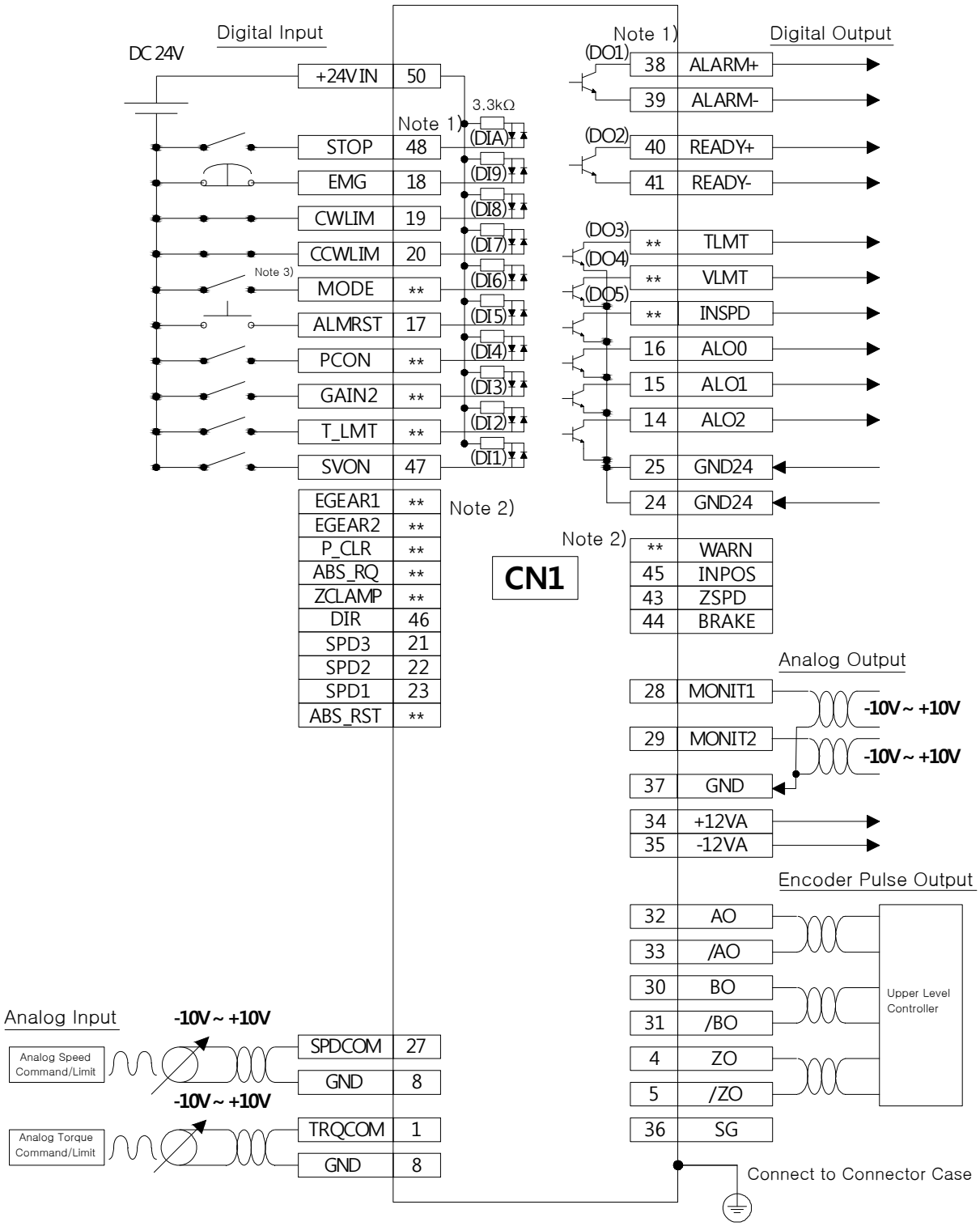

Note 1) Input signals DI1 to DIA and output signals DO1 to DO5 are default signals allocated by the factory.
Note 2) **These are non-allocated signals. You can change their allocation by setting parameters. For information, refer to "4.1.6 External Input Signal and Logic Definition" and "4.1.8 External Output Signal and Logic Definition."
Note 3) Input Contact Mode = ON : Speed Control Mode, Mode = OFF : Torque Operation Mode

1.2.8 Example of Position/Torque Operation Mode Wiring

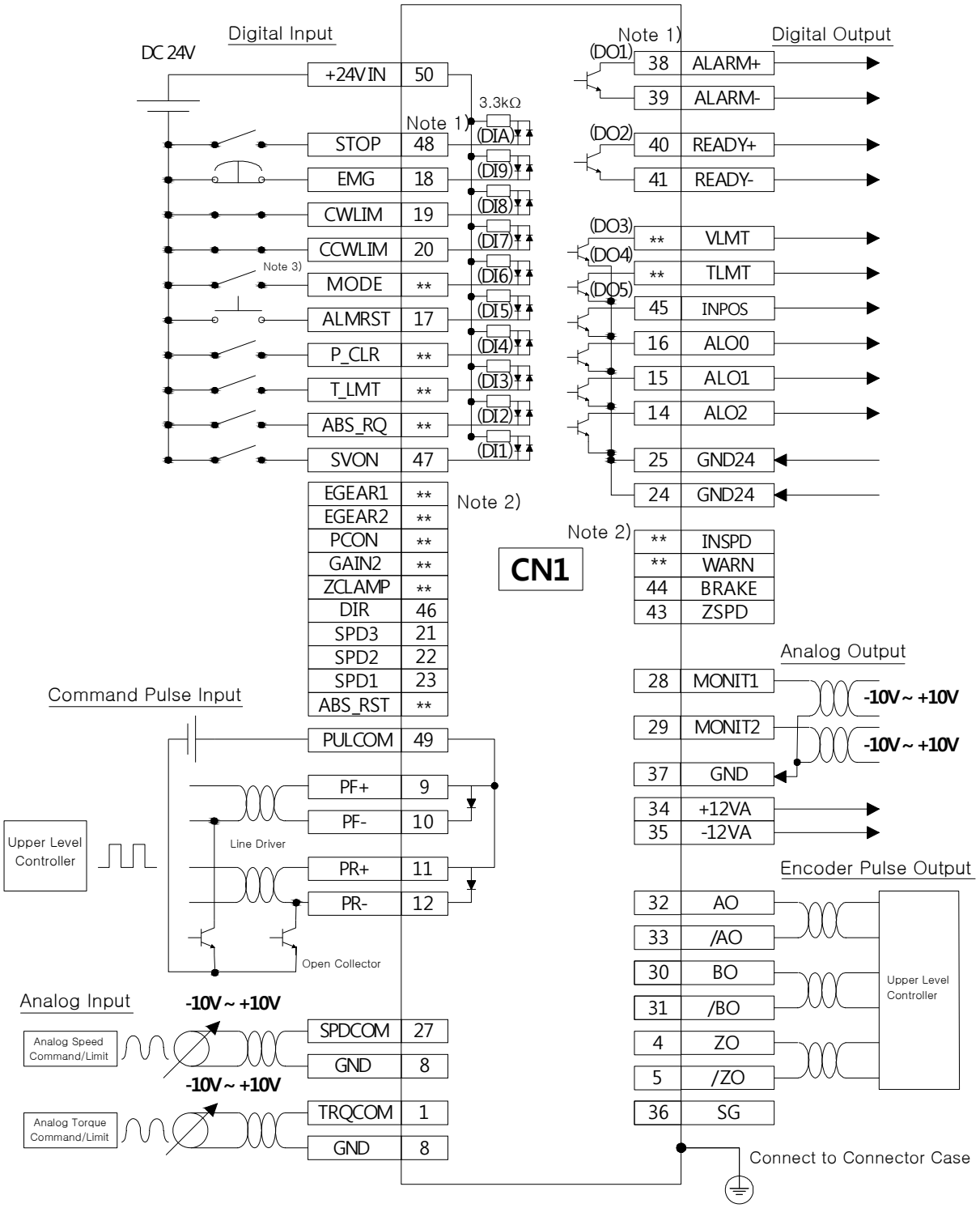

Note 1) Input signals DI1 to DIA and output signals DO1 to DO5 are default signals allocated by the factory.
Note 2) **These are non-allocated signals. You can change their allocation by setting parameters. For information, refer to "4.1.6 External Input Signal and Logic Definition" and "4.1.8 External Output Signal and Logic Definition."
Note 3) Input Contact Mode = ON : Position Control Mode, Mode = OFF : Torque Operation Mode

1.3 Signal

1.3.1 Digital Input Contact Signal

Pin Number of Factory Setting	Name	Details	Applicable Modes					
			Position	Speed	Torque	Speed /Position	Speed /Torque	Position /Torque
50	+24 V IN	Input contact +24 [V] power	O	O	O	O	O	O
47	SVON	Servo ON	O	O	O	O	O	O
23	SPD1	Multi-speed 1	X	O	X	O/X	O/X	X
22	SPD2	Multi-speed 2	X	O	X	O/X	O/X	X
21	SPD3	Multi-speed 3	X	O	X	O/X	O/X	X
17	ALMRST	Reset upon alarm	O	O	O	O	O	O
46	DIR	Select rotation direction	O	O	O	O	O	O
20	CCWLMT	Counter-clockwise limit	O	O	O	O	O	O
19	CWLMT	Clockwise limit	O	O	O	O	O	O
18	EMG	Emergency stop	O	O	O	O	O	O
48	STOP	Stop	X	O	O	O/X	O	X/O
Allocate	EGEAR1	Electronic gear ratio 1	O	X	X	X/O	X	O/X
Allocate	EGEAR2	Electronic gear ratio 2	O	X	X	X/O	X	O/X
Allocate	PCON	P control action	O	O	X	O	O/X	O/X
Allocate	GAIN2	Select gain 2	O	O	X	O	O/X	O/X
Allocate	P_CLR	Clear error pulse	O	X	X	X/O	X	O/X
Allocate	T_LMT	Control torque with TRQCOM	O	O	O	O	O	O
Allocate	MODE	Change operation modes	X	X	X	O	O	O
Allocate	ABS_RQ	Request absolute position data	O	O	O	O	O	O
Allocate	ZCLAMP	Zero clamp	X	O	X	O/X	O/X	O
Allocate	ABS_RST	Reset absolute encoder data	O	O	O	O	O	O

* ABS_RST is applied from OS Ver 1.24

1.3.2 Analog Input Contact Signal

Pin Number	Name	Description	Applicable Modes					
			Position	Speed	Torque	Speed /Position	Speed /Torque	Position /Torque
27	SPDCOM	Analog speed command (-10-+10 [V])	X	O	X	O/X	O/X	X
		Analog Speed Limit (-10-+10 [V])	X	X	O	X	X/O	X/O
1	TRQCOM	Analog Torque Command (-10-+10 [V])	X	X	O	X	X/O	X/O
		Analog torque limit (-10-+10 [V])	O	O	X	O	O/X	O/X
8 37	GND	Grounding for analog signals	O	O	O	O	O	O

1.3.3 Digital Output Contact Signal

Pin Number of Factory Setting	Name	Description	Applicable Modes					
			Position	Speed	Torque	Speed /Position	Speed /Torque	Position /Torque
16	ALO0	Alarm group contact output 1	O	O	O	O	O	O
15	ALO1	Alarm group contact output 2	O	O	O	O	O	O
14	ALO2	Alarm group contact output 3	O	O	O	O	O	O
38 / 39	ALARM +/-	Alarm	O	O	O	O	O	O
40 / 41	READY +/-	Ready for operation	O	O	O	O	O	O
43	ZSPD	Zero speed reached	O	O	O	O	O	O
44	BRAKE	Brake	O	O	O	O	O	O
45	INPOS	Position reached	O	X	X	X/O	X	O/X
Allocate	TLMT	Torque limit	O	O	O	O	O	O
Allocate	VLMT	Speed limit	O	O	O	O	O	O
Allocate	INSPD	Speed reached	X	O	X	O/X	O/X	X
Allocate	WARN	Warning	O	O	O	O	O	O
24 25	GND24	Input/output contact Grounding of drive power (24 [V])	O	O	O	O	O	O

1.3.4 Monitor Output Signal and Output Power

Pin Number	Name	Description	Applicable Modes					
			Position	Speed	Torque	Speed /Position	Speed /Torque	Position /Torque
28	MONIT1	Analog monitor output 1 (-10-+10 [V])	O	O	O	O	O	O
29	MONIT2	Analog monitor output 2 (-10-+10 [V])	O	O	O	O	O	O
8 37	GND	Grounding for analog signals	O	O	O	O	O	O
34	+12 V	Terminal for +12 [V] power output	O	O	O	O	O	O
35	-12 V	Terminal for -12 [V] power output	O	O	O	O	O	O

1.3.5 Pulse Train Input Signal

■ Line Driver (5 V)

Pin Number	Name	Description	Applicable Modes					
			Position	Speed	Torque	Speed /Position	Speed /Torque	Position /Torque
9	PF+	F+ pulse input	O	X	X	X/O	X	O/X
10	PF-	F- pulse input	O	X	X	X/O	X	O/X
11	PR+	R+ pulse input	O	X	X	X/O	X	O/X
12	PR-	R- pulse input	O	X	X	X/O	X	O/X
49	PULCOM	Not for use	X	X	X	X	X	X

■ Open Collector (24 V)

Pin Number	Name	Description	Applicable Modes					
			Position	Speed	Torque	Speed /Position	Speed /Torque	Position /Torque
9	PF+	Not for use	X	X	X	X	X	X
10	PF-	F pulse input	O	X	X	X/O	X	O/X
11	PR+	Not for use	X	X	X	X	X	X
12	PR-	R pulse input	O	X	X	X/O	X	O/X
49	PULCOM	+24 V power input	O	X	X	X/O	X	O/X

1.3.6 Encoder Output Signal

Pin Number	Name	Description	Applicable Modes					
			Position	Speed	Torque	Speed /Position	Speed /Torque	Position /Torque
32 33 30 31	AO /AO BO /BO	Outputs encoder signals received from the motor as signals pre-scaled according to the ratio defined by [P0-14]. (5 [V] line driver method)	O	O	O	O	O	O
4 5	ZO /ZO	Outputs encoder Z signals received from the motor. (5 [V] line driver method)	O	O	O	O	O	O

2 Installation

2.1 Servo Motor

2.1.1 Usage Environment

Item	Requirements	Notes
Ambient temperature	0 ~ 40[℃]	Consult with our technical support team to customize the product if the temperature in the installation environment is over the given temperature.
Ambient humidity	80[%] RH or lower	Use the product in steam-free places.
External vibration	Vibration acceleration 19.6 [㎧] or below in the X and Y directions	Excessive vibration reduces the lifespan of bearings.

2.1.2 Prevention of Excessive Impact

Excessive impact to the motor shaft during installation, or the motor falling during handling, may damage the encoder.

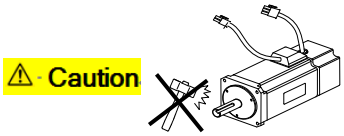

2.1.3 Motor Connection

- The motor might burn out when commercial power is directly connected to it.
  Be sure to connect via the specified drive.
- Connect the ground terminal of the motor to either of the two ground terminals inside the drive, and the remaining terminal to the type-3 grounding.

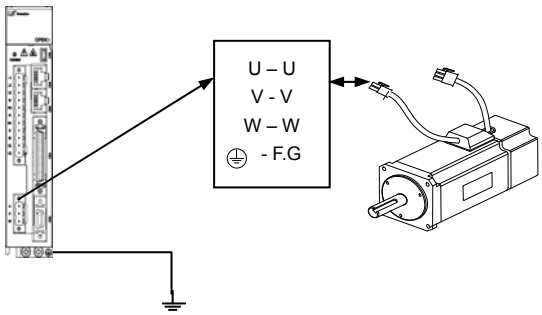

- Connect the U, V, and W terminals of the motor, just as the U, V, and W terminals of the drive.
- Make sure that the pins on the motor connector are securely connected.
- In case of moisture or condensation on the motor, make sure that insulation resistance is 10 [㏁] (500 [V]) or higher before you start installation.

2.1.4 Load Device Connection

For coupling connection: Make sure that the motor shaft and the load shaft are aligned within the tolerance.

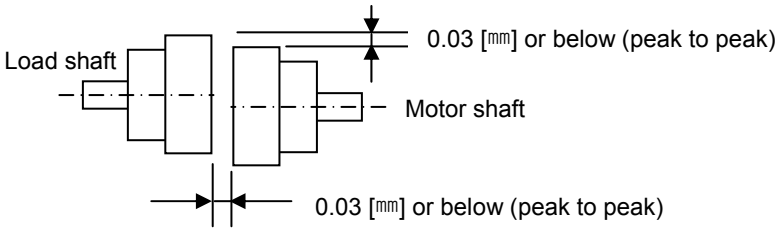

■ For pulley connection:

Flange	Lateral Load		Axial Load		Notes
	N	kgf	N	kgf	
40	148	15	39	4	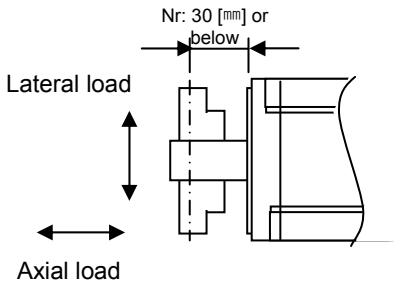
60	206	21	69	7	
80	255	26	98	10	
130	725	74	362	37	
180	1548	158	519	53	
220	1850	189	781	90	

2.1.5 Cable Installation

- In case of vertical installation, make sure that no oil or water flows into connection parts.

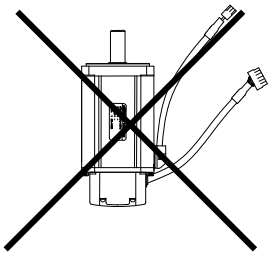

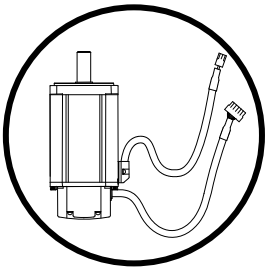

- Do not apply pressure or scratch, to cables.

  In case of moving the motor, be sure to use robotic cables to prevent sway.

2.2 Servo Drive

2.2.1 Usage Environment

Item	Requirements	Notes
Ambient temperature	0～50[℃]	⚠ **Caution** Install a cooling fan on the control panel in to keep the surrounding temperature within the required range.
Ambient humidity	90[%] RH or lower	⚠ **Caution** Condensation or freezing of moisture inside the drive during prolonged periods of inactivity may damage it. Remove any moisture completely before you operate the drive after a prolonged period of inactivity.
External vibration	Vibration acceleration 4.9 [㎧] or lower	Excessive vibration reduces the lifespan of the machine and causes malfunction.
Surrounding conditions	▪ No exposure to direct sunlight. ▪ No corrosive gas or combustible gas. ▪ No oil or dust. ▪ Sufficient ventilation for closed areas.	

2.2.2 Installation Inside the Control Panel

Comply with the spaces specified in the following images for installation inside the control panel.

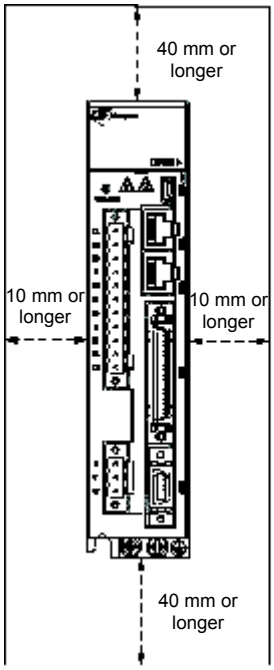

When installing 1 unit:

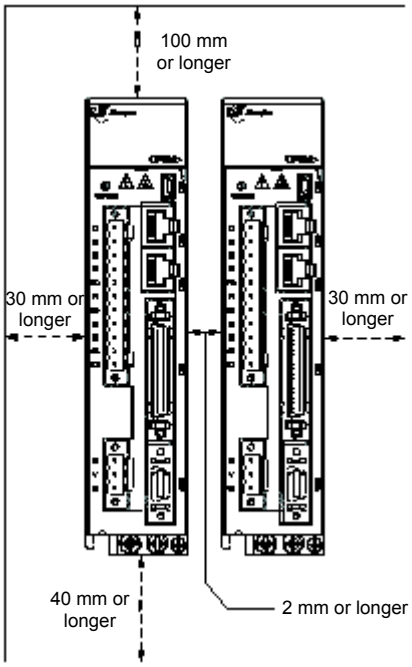

When installing 2 or more units:

⚠ Caution

- Make sure that heat does not affect the drive during the installation of external regenerative resistance.
- When assembling the control panel of the servo drive, make sure that it is sufficiently close to the wall.
- When assembling the control panel, make sure that metal powder caused by drilling does not enter the drive.
- Make sure that oil, water, and metal dust do not enter the drive through gaps or the ceiling.
- Protect the control panel with air purge in places where there is a lot of harmful gas or dust.

2.2.3 Power Wiring

- Make sure that the input power voltage is within the allowed range.

⚠ Caution
Overvoltage can damage the drive.

- Connecting commercial power to the U, V and W terminals of the drive may cause damage.
  Be sure to supply power via L1, L2 and L3 terminals.

- Connect short-circuit pins to the B and BI terminals. For external regenerative resistance, use standard resistance for the B+ and B terminals after removing the short-circuit pins.

Model	Resistance Value	Standard Capacity	* Notes
XDL-L7□A001□	100 [Ω]	Built-in 50 [W]	⚠ **Caution** For more information about resistance for expanding regenerative capacity, refer to “7.3 Option and Peripheral Device.”
XDL-L7□A002□			
XDL-L7□A004□			
XDL-L7□A08□	40 [Ω]	Built-in 100 [W]	
XDL-L7□A010□			
XDL-L7□A020□	13 [Ω]	Built-in 150 [W]	
XDL-L7□A035□			
XDL-L7□A050□	6.8[Ω]	Built-in 120[W]	

- Configure the system in a way that main power (L1, L2, L3) is supplied only after control power (C1, C2). (Refer to “Chapter 3 Wiring.”)

- High voltage remains for a while, even after the main power is disconnected.

⚠ Danger
After disconnecting the main power, make sure that the charge lamp is off before you start wiring. There is a risk of electric shock.

- Grounding must be done over the shortest distance.
  A long ground wire is susceptible to noise which may cause malfunction.

3 Wiring Method

3.1 Internal Block Diagram

3.1.1 XDL-L7 Drive Block Diagram [XDL-L7SA001□ - XDL-L7SA004□]

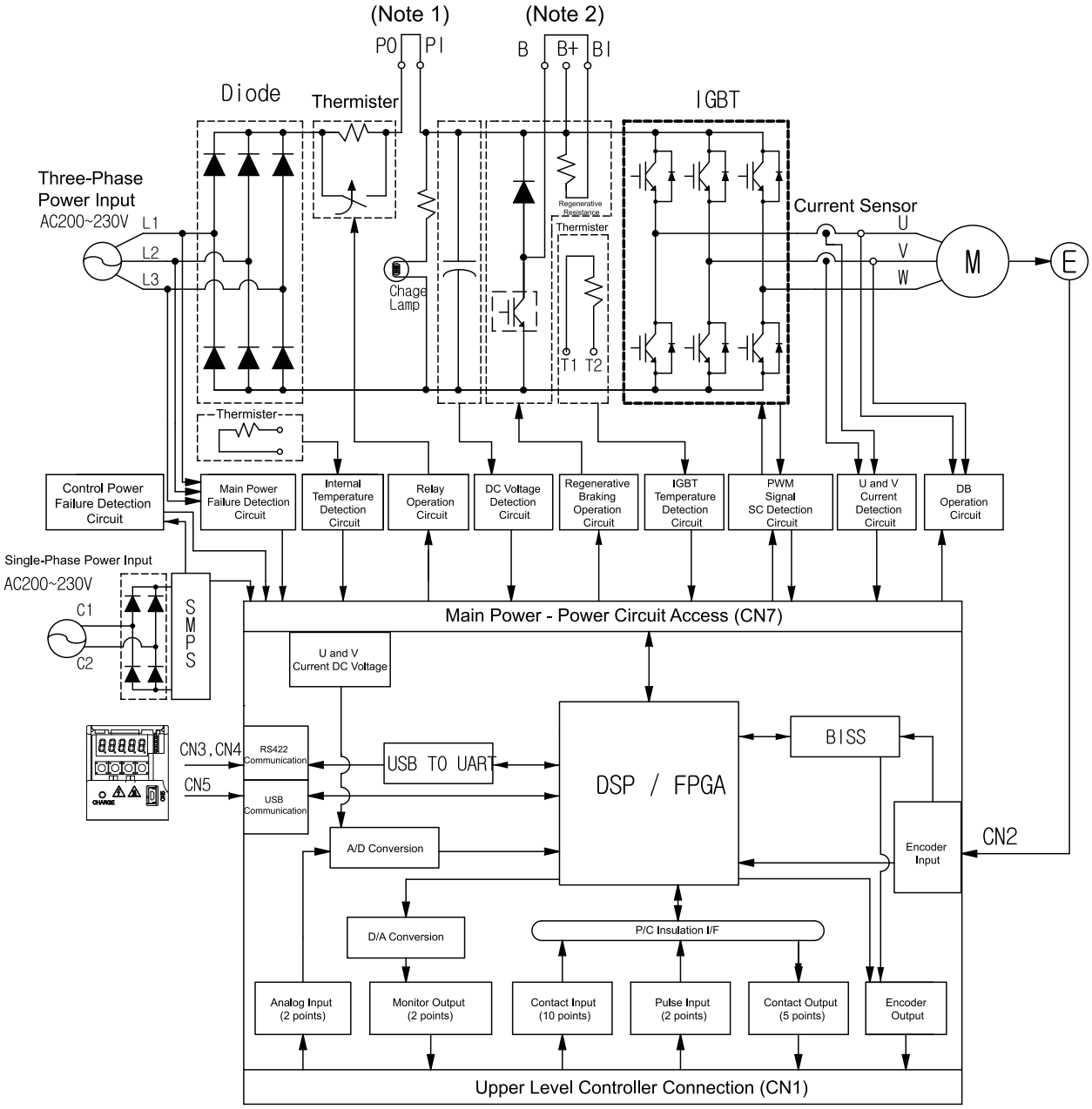

If you use a DC reactor, connect to the PO and PI pins.

If you use external regenerative resistance, connect to the B+ and B pins after removing the B and BI short-circuit pins.

3.1.2 XDL-L7 Drive Block Diagram [XDL-L7SA008□ - XDL-L7SA035□]

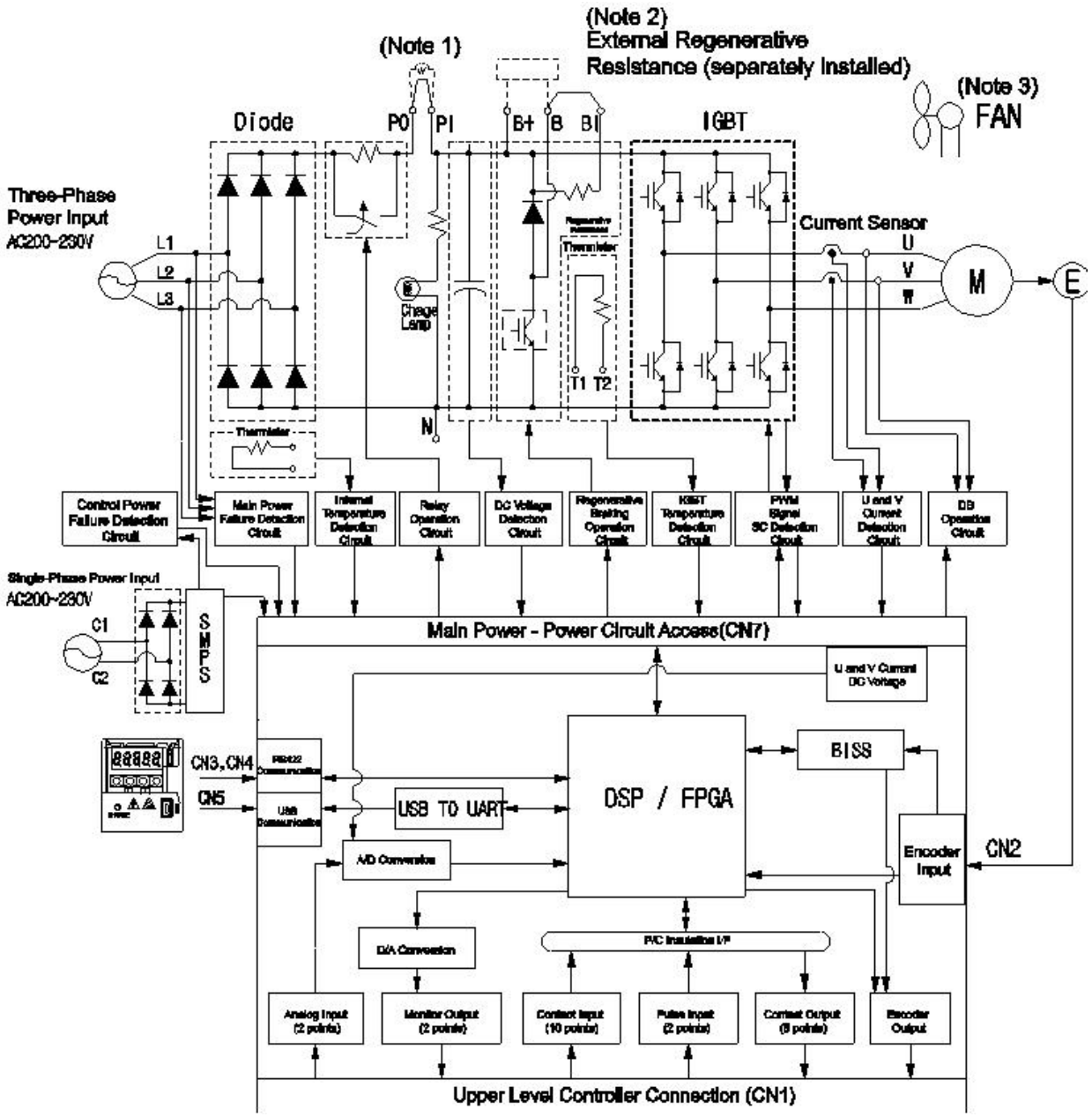

NOTE 1) If you use a DC reactor, connect to the PO and PI pins.

If you use external regenerative resistance, connect to the B+ and B pins after you remove the B and BI short-circuit pins.

The XDL-L7SA008□ and XDL-L7SA035□ models are cooled by a DC 24 [V] cooling fan.

3.1.3 XDL-L7 Drive Block Diagram [XDL-L7SA050□]

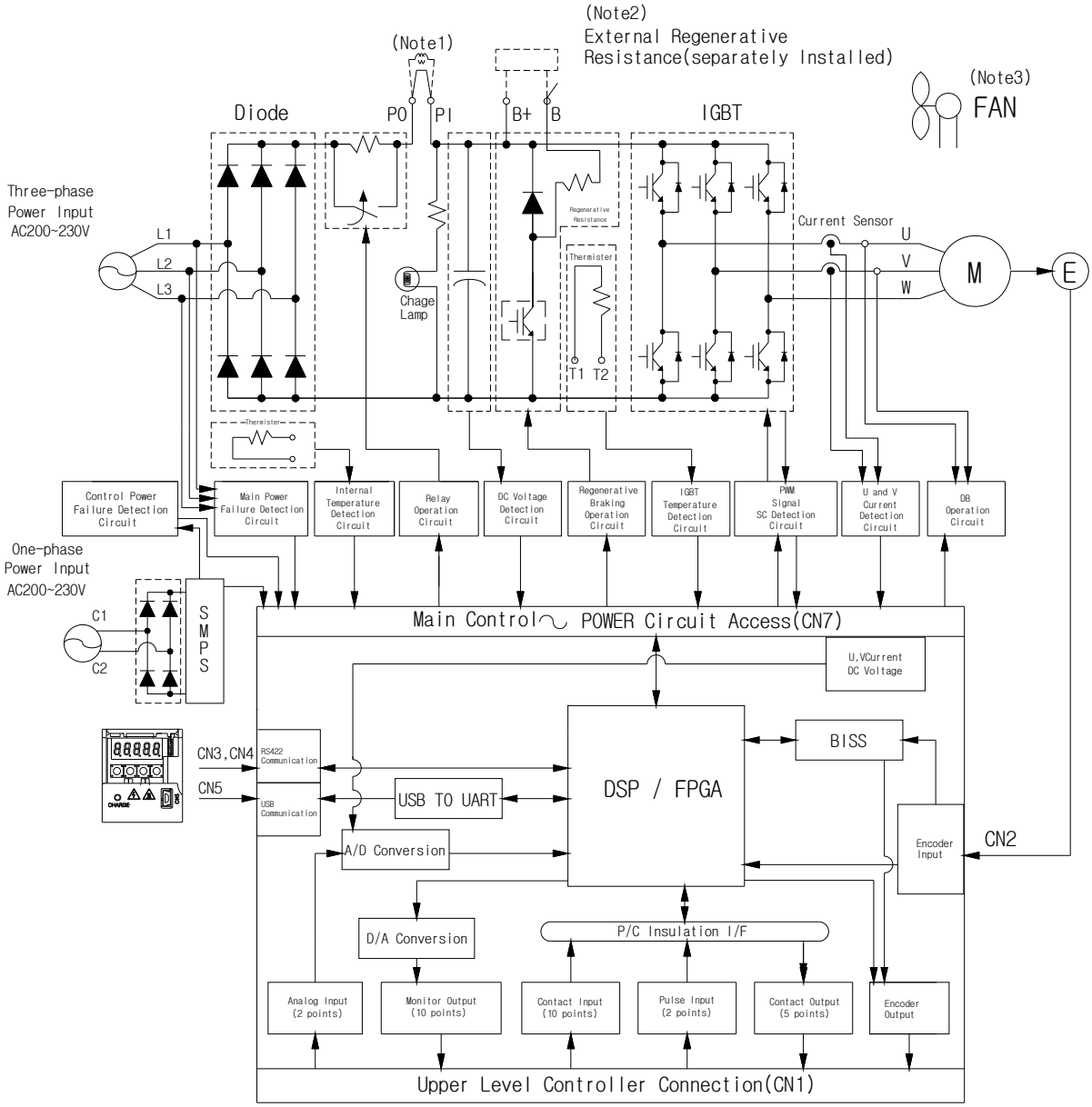

NOTE 1) If you use a DC reactor, connect to the PO and PI pins.

If you use external regenerative resistance, connect to the B+ and B pins after attaching wires of internal regenerative resistance to “NC” hole on the case.

The XDL-L7SA050□ models are cooled by a DC 24 [V] cooling fan.

3.2 Power Wiring

3.2.1 XDL-L7 Drive Wiring Diagram [XDL-L7SA001□ - XDL-L7SA035□]

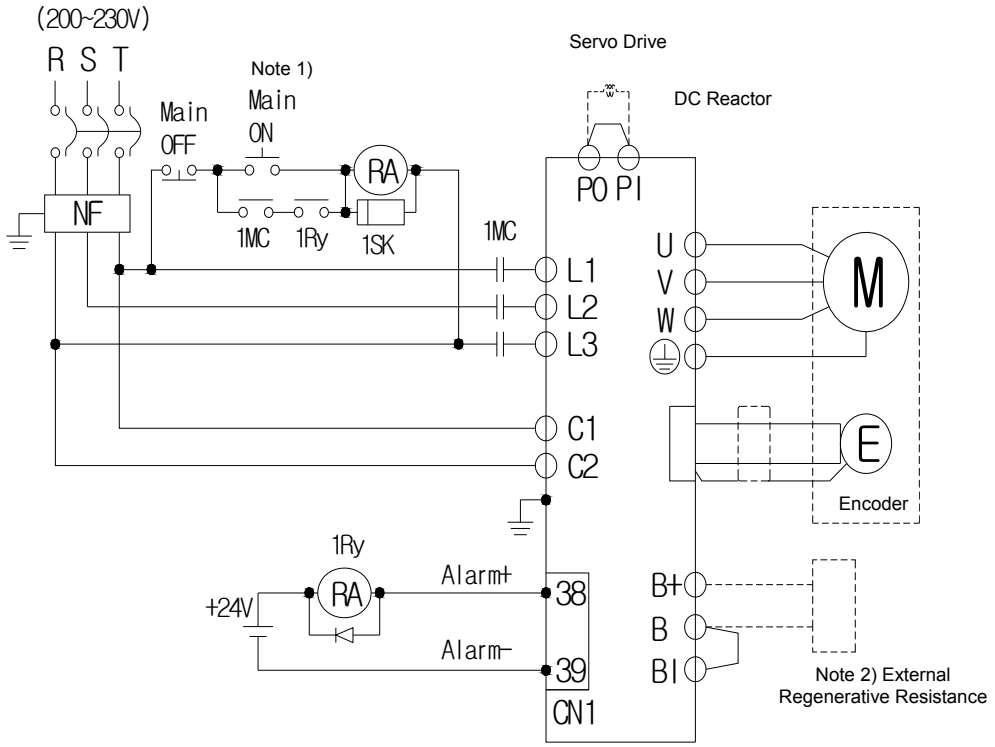

NOTE 1) It takes approximately one to two seconds until alarm signal is output after you turn on the main power. Accordingly, push and hold the main power ON switch for at least two seconds.

Short-circuit B and BI terminals before use. Regenerative resistance of XDL-L7SA001□-XDL-L7SA004□ (50 [W], 100 [Ω]), XDL-L7SA010□ (100 [W], 40 [Ω]), and XDL-L7SA035□ (150 [W], 13 [Ω]) exist inside. If regenerative capacity is high because of frequent acceleration and deceleration, open the short-circuit pins (B, BI) and connect external regenerative resistance to B and B+.

Remove approximately 7-10 [mm] of the sheath from the cables for the main circuit power and attach crimp terminals. (Refer to “3.2.2 Power Circuit Electric Sub Assembly Standards.”)

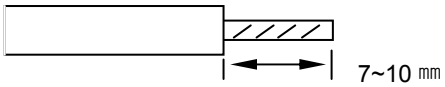

Connect or remove the main circuit power unit wiring after pushing the button of the XDL-L7SA001□ – XDL-L7SA010□ drive terminal. For XDL-L7SA035□ drive, use a (-) slot screwdriver for connection and removal.

3.2.2 XDL-L7 Drive Wiring Diagram [XDL-L7SA050□]

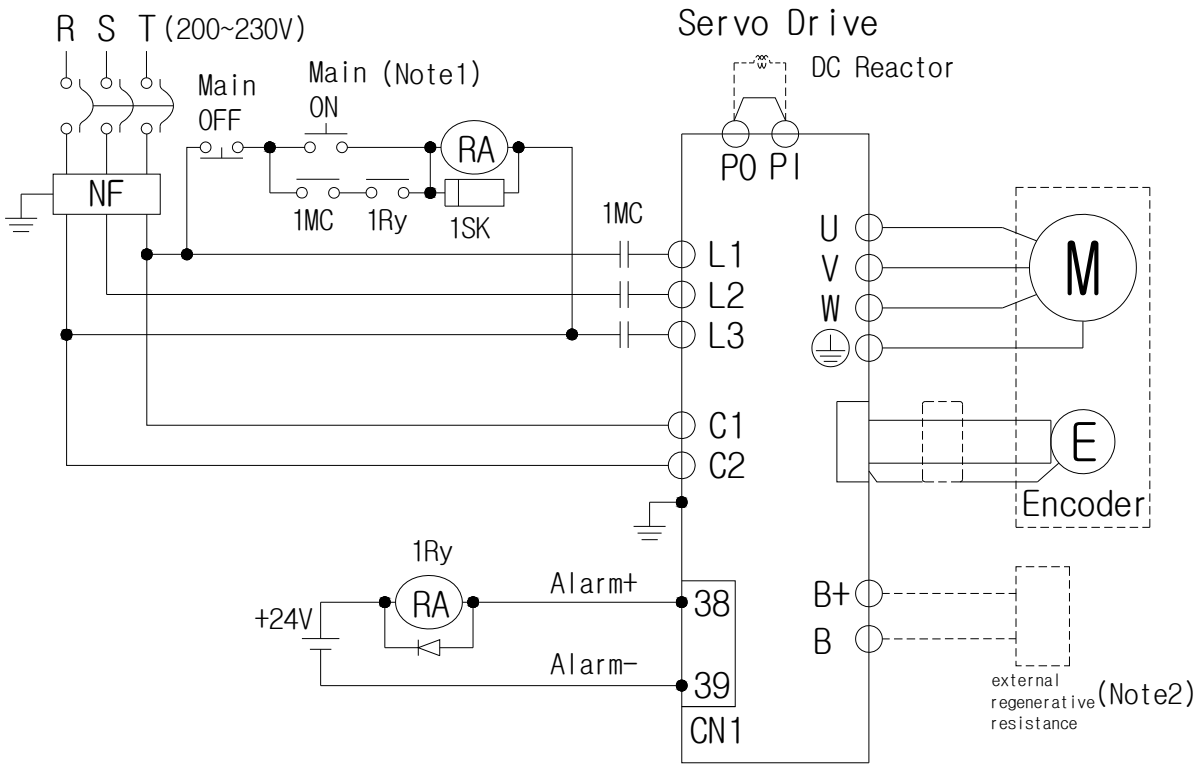

NOTE 1) It takes approximately one to two seconds until alarm signal is output after you turn on the main power. Accordingly, push and hold the main power ON switch for at least two seconds.

NOTE 2) Check status of connection of internal regenerative resistance (B+, B) before using because XDL-L7SA050□ (120[W], 6.8[Ω]) has internal regenerative resistance. If the value of regenerative voltage is too high by frequent deceleration and acceleration, install external regenerative resistance on B, B+ terminal after attaching internal regenerative resistance connected B+, B to “NC” hole on the case.

3.2.3 Dimensions for Power Circuit Electrical Parts

Name		XDL-L7SA001□	XDL-L7SA002□	XDL-L7SA004□	XDL-L7SA008□	XDL-L7SA010□	XDL-L7SA020□	XDL-L7SA035□	XDL-L7SA050□
MCCB(NFB)		30A Frame 5A (ABE33b/5)		30A Frame 10A (ABE33b/10)	30A Frame 15A (ABE33b/15)		30A Frame 30A (ABE33b/30)		50A Frame 40A(ABE53b /40)
Noise Filter (NF)		TB6-B010LBEI(10A)					TB6-B030NBDC(30A)		TB6-B040A(40A)
DC reactor		HFN-10 (10 A)			HFN-15 (15 A)		HFN-30 (30 A)		HFN-40(40A)
MC		11A / 240V (GM□-9)			18A / 240V (GM□-18)		32A / 240V (GM□-32)		50A / 240V (GM□-50)
Wire	L1,L2,L3 PO,PI,N, B+,B,BI U,V,W	AWG16 (1.5 ㎟)			AWG14 (2.5 ㎟)		AWG12 (4.0 ㎟)		AWG10 (6.0 ㎟)
	C1 C2	AWG16(1.5 ㎟)			AWG16(1.5 ㎟)		AWG16(1.5 ㎟)		AWG16(1.5 ㎟)
Crimp terminal		UA-F1510, SEOIL (10 mm Strip & Twist)			UA-F2010, SEOIL (10 mm Strip & Twist)		UA-F4010, SEOIL(10 mm Strip & Twist)		GP110028 KET
Regenerative resistance (Provided by default)		50 [W] 100 Ω			100 [W] 40 Ω		150 [W] 13 Ω		120[W] 6.8Ω
Connector (L1,L2...U,V,W)		• BLF 5.08/03/180F SN BK BX • BLF 5.08/11/180F SN BK BX					• BLZ7.62HP/03/180LR SN BK BX SO BLZ7.62HP/11/180LR SN BK BX SO		

Note1) Use 600V-PVC Insulated wire for wiring.

Use approved UL wire (Temp. 60℃ or above) for UL (CSA) Regulation.

Use approved wire for any other regulations.

Use equivalent or advanced components compare to components above for any special applications.

(XDL-L7SA004□ or below)

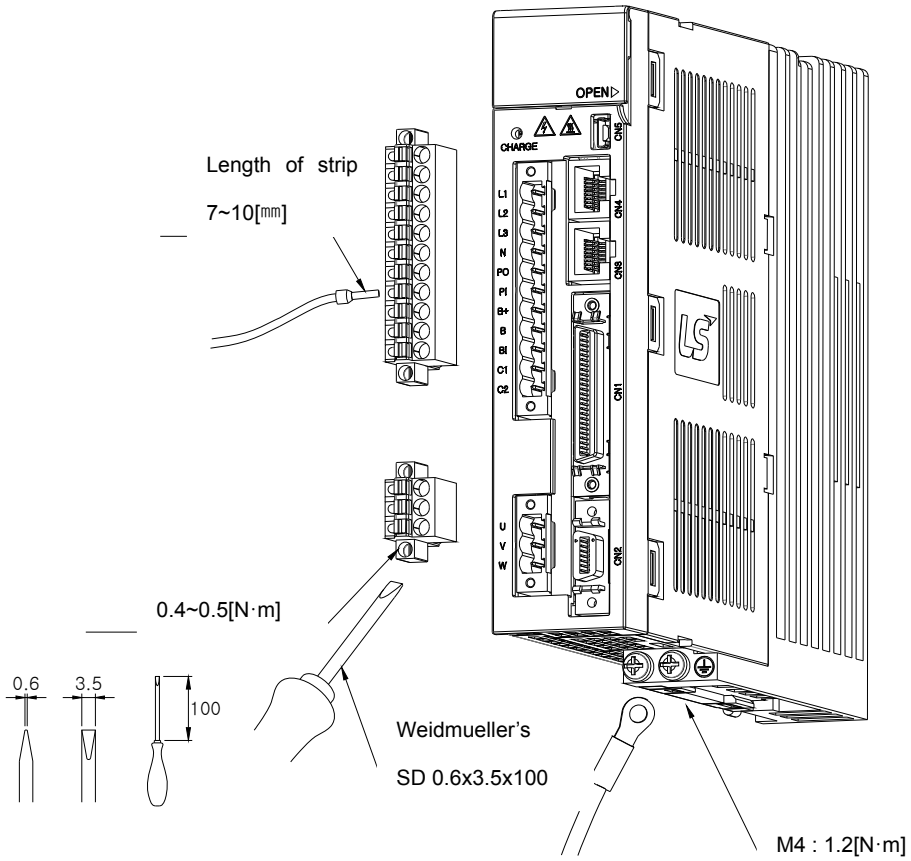

(XDL-L7SA008□ ~ XDL-L7SA010□)

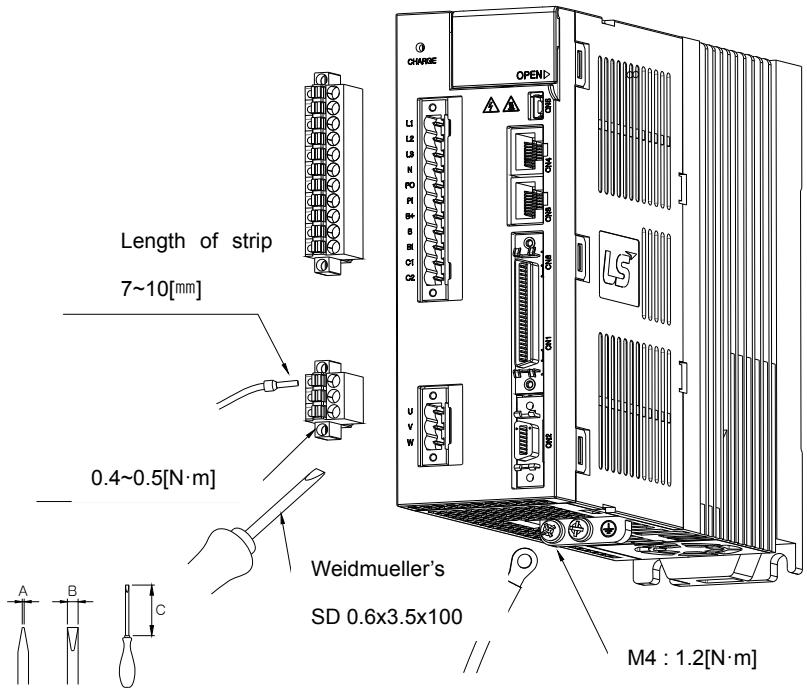

(XDL-L7SA020□ ~ XDL-L7SA035□)

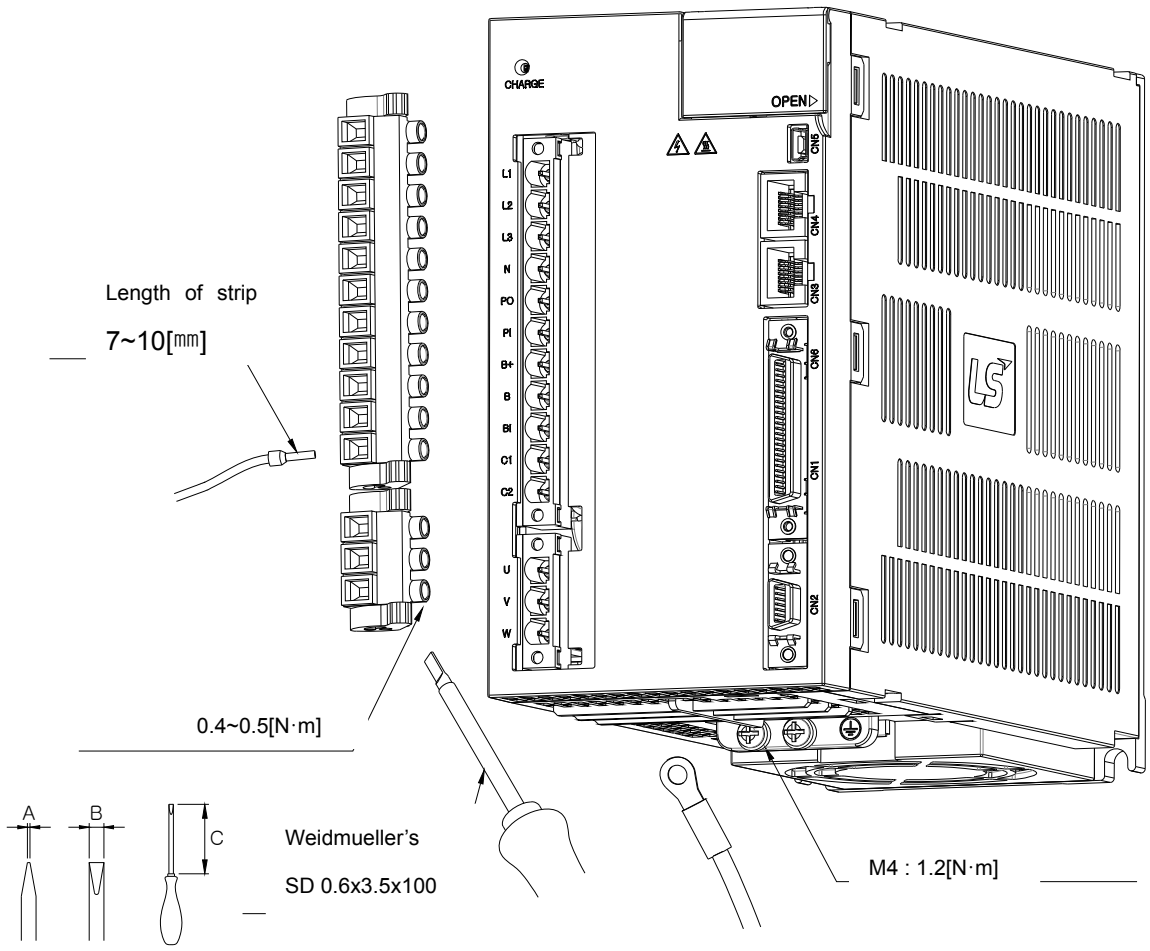

1) Refer to the drawings above for wiring with BLF 5.08 or BLZ 7.62HP Series connector.

2) Insert wire into wire-hole when upper screw is untightened and then, use appropriate (-) shaped screwdriver with 0.4 ~ 0.5[N.m] torque to make tight completely.

3) Cut by vibration, malfunction or fire by contact could be occurred if torque of screwing was not enough.

4) After wiring, tight completely by using hooks to both side when connectors are attached to servo drive.

5) FG screw, which is located on the bottom of servo drive, has to be M4 and put on the FG screw with 1.2[N.m] torque.

6) Malfunction of drive could be occurred if torque of screwing was not enough.

7) Recommended (-) shaped screwdriver: Weidmueller's SD 0.6x3.5x100.

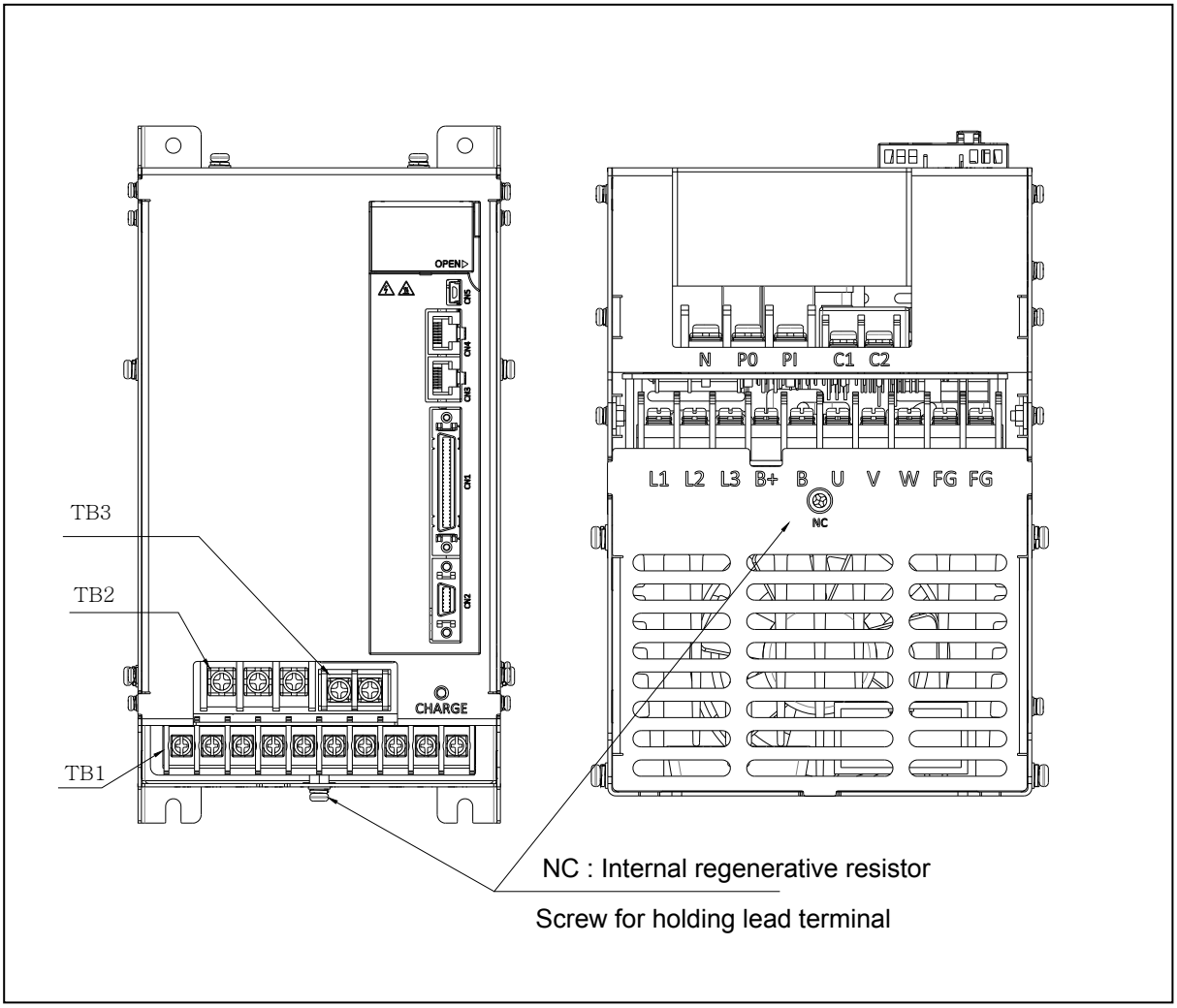

(XDL-L7SA050□)

Terminal Block Signals

TB1

L1	L2	L3	B+	B	U	V	W	FG	FG

Screw : M4

Screwing torque : 1.2[N·m]

TB2

N	PO	P1

Screw : M4

Screwing torque : 1.2[N·m]

TB3

C1	C2

Screw : M4

Screwing torque : 1.2[N·m]

1) Cut by vibration, malfunction or fire by contact could be occurred if torque of screwing was not enough.

3.3 Example of connecting to PLC

3.3.1 XGT PLC

1. XGF-PO1/2/3A (Open Collector)

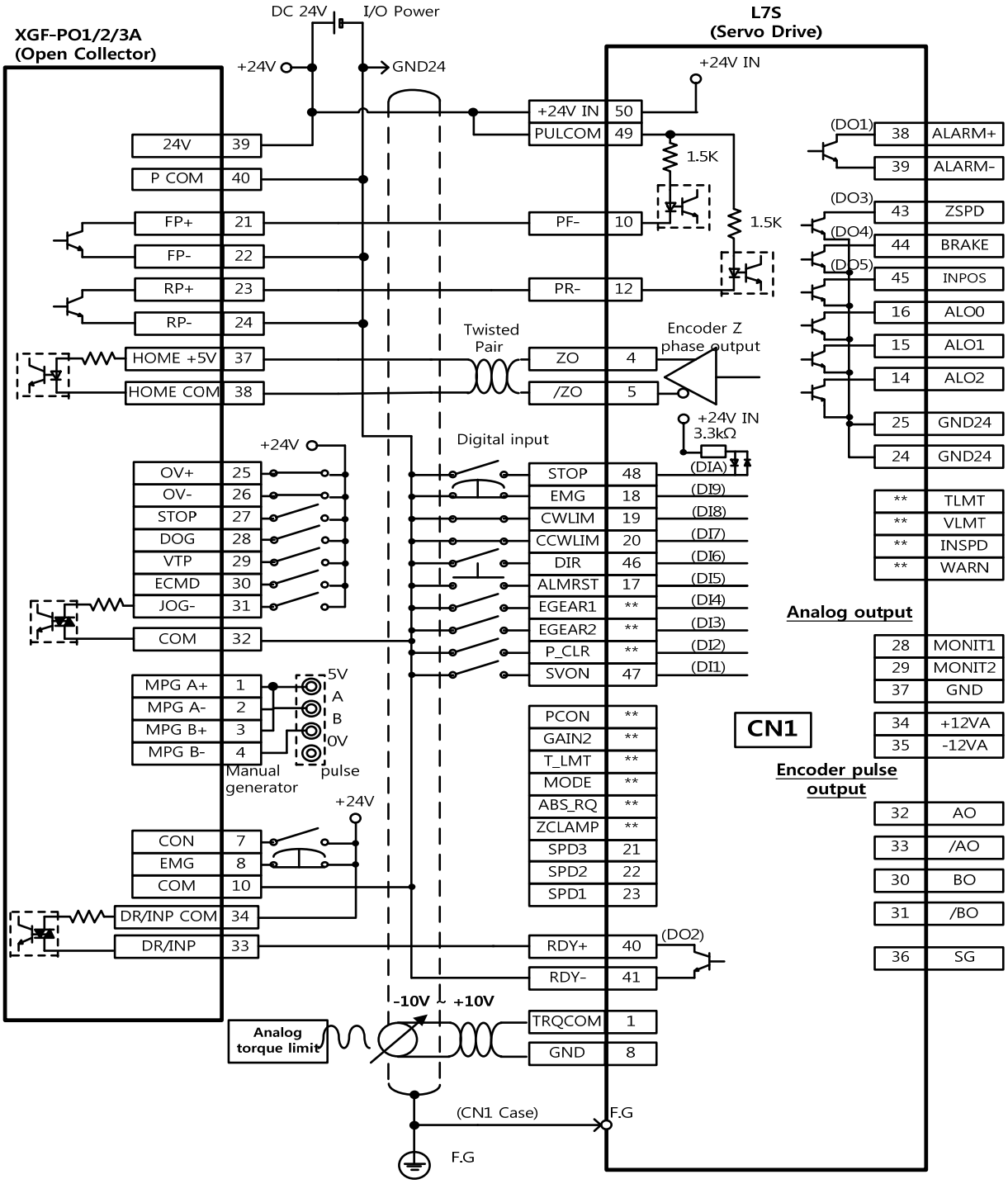

※This is an example for the standard of 1 axis. To use 2, 3 axis, refer to the pin diagram of positioning module.

2. XGF-PD1/2/3A (Line Driver)

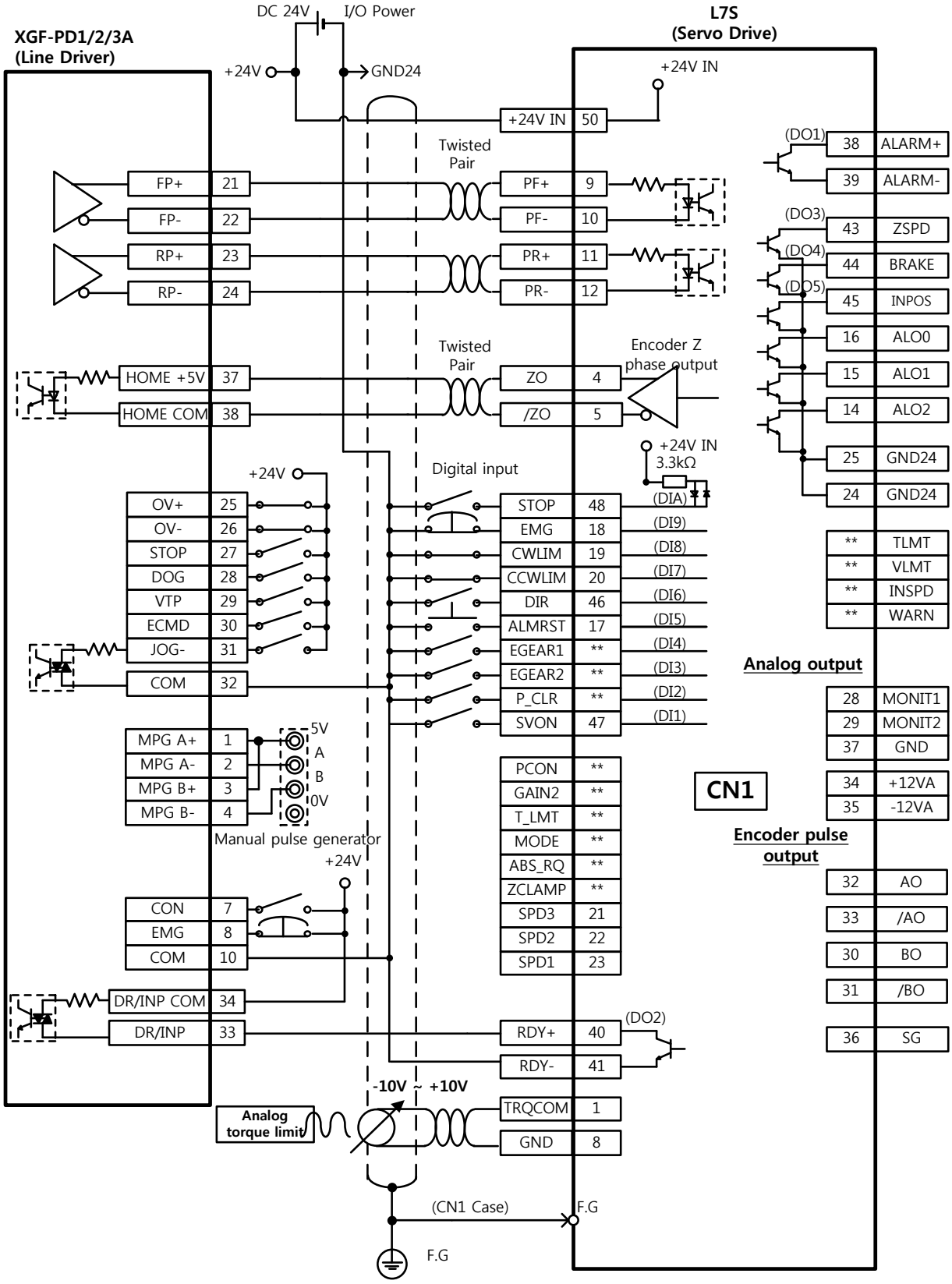

※ This is an example for the standard of 1 axis. To use 2, 3 axis, refer to the pin diagram of positioning module.

3. XGF-PO1/2/3/4H (Open Collector)

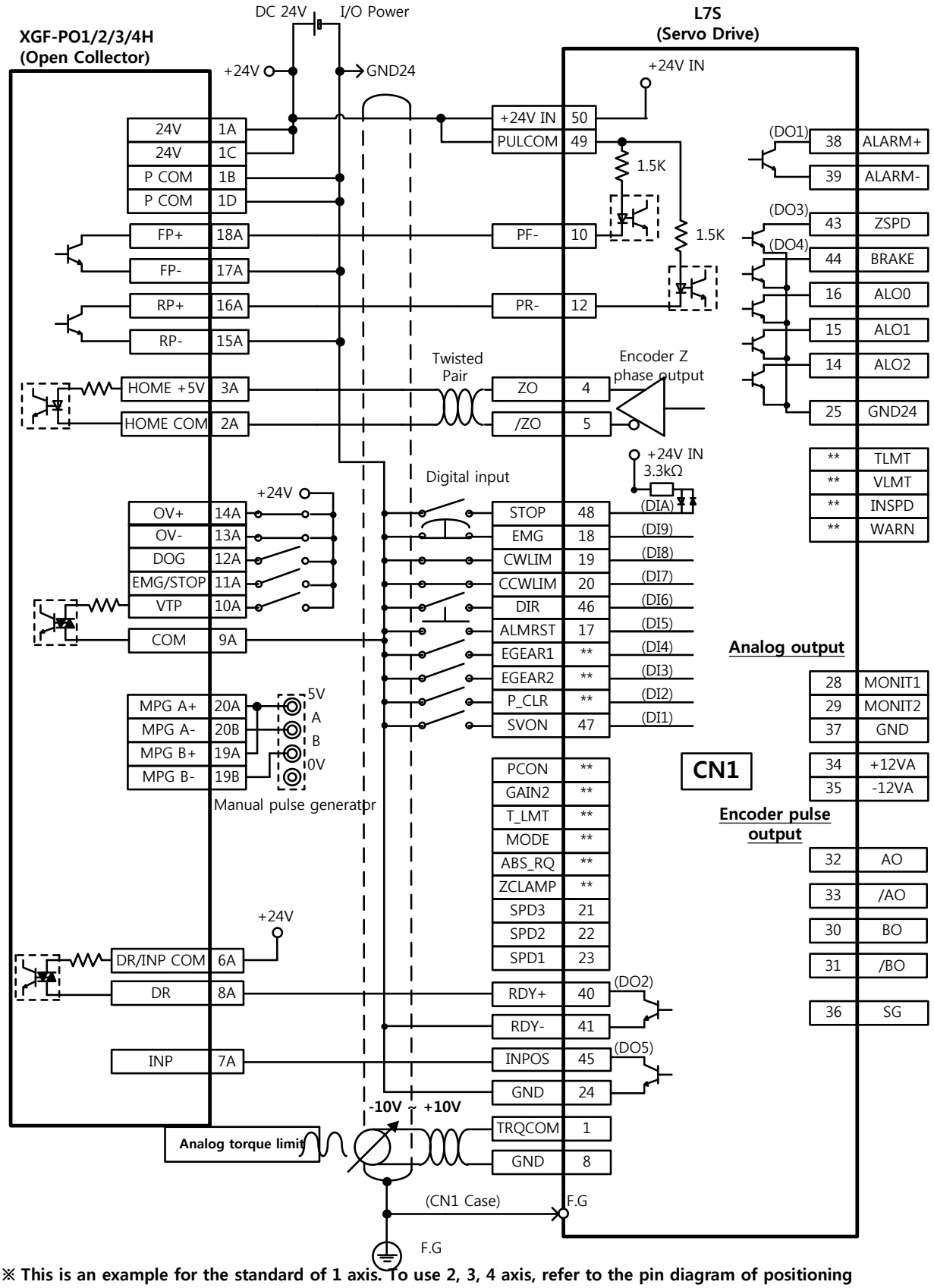

※ This is an example for the standard of 1 axis. To use 2, 3, 4 axis, refer to the pin diagram of positioning module.

4. XGF-PD1/2/3/4H (Line Driver)

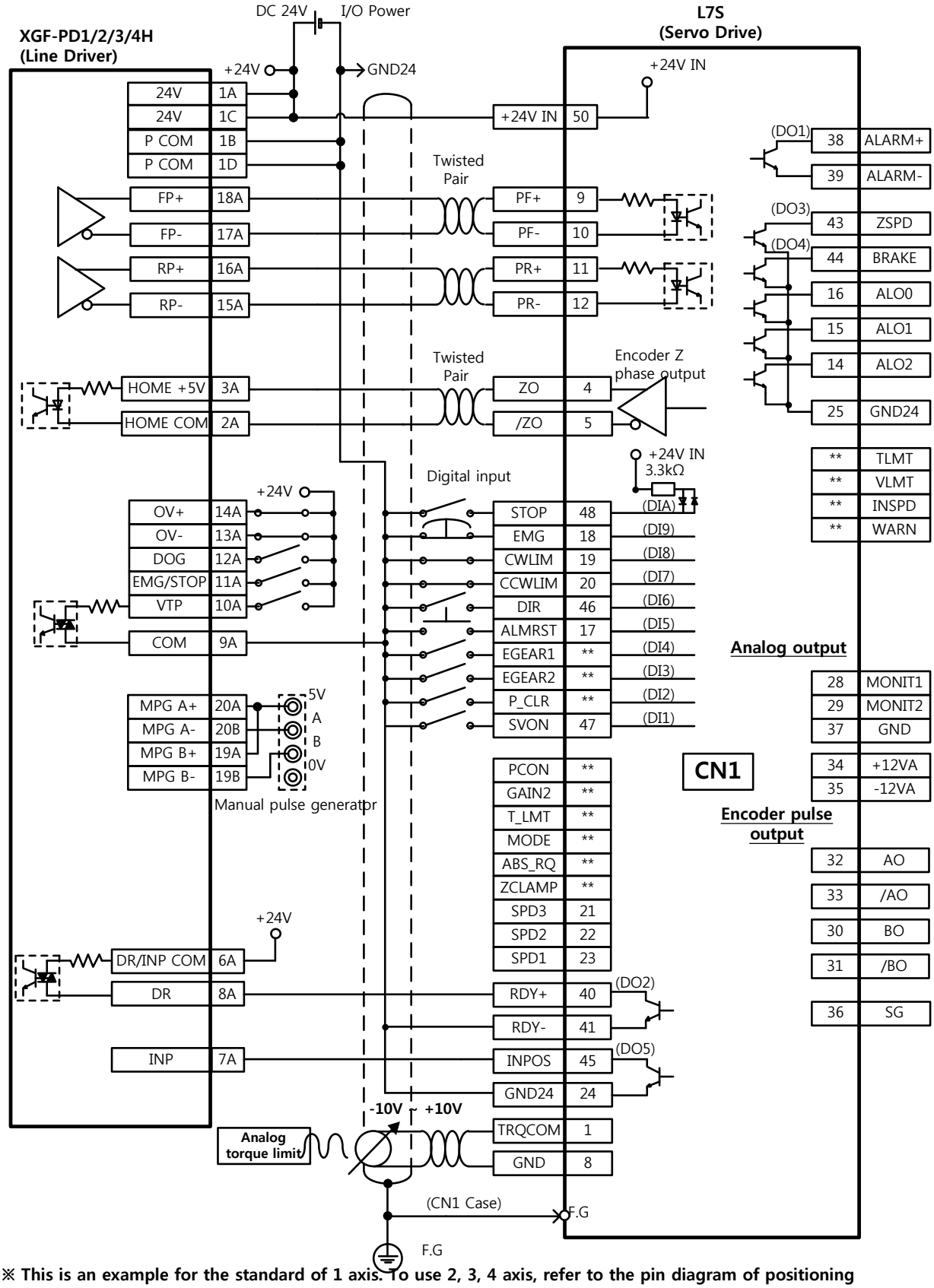

※ This is an example for the standard of 1 axis. To use 2, 3, 4 axis, refer to the pin diagram of positioning module.

5. XBF-PD02A (Line Driver)

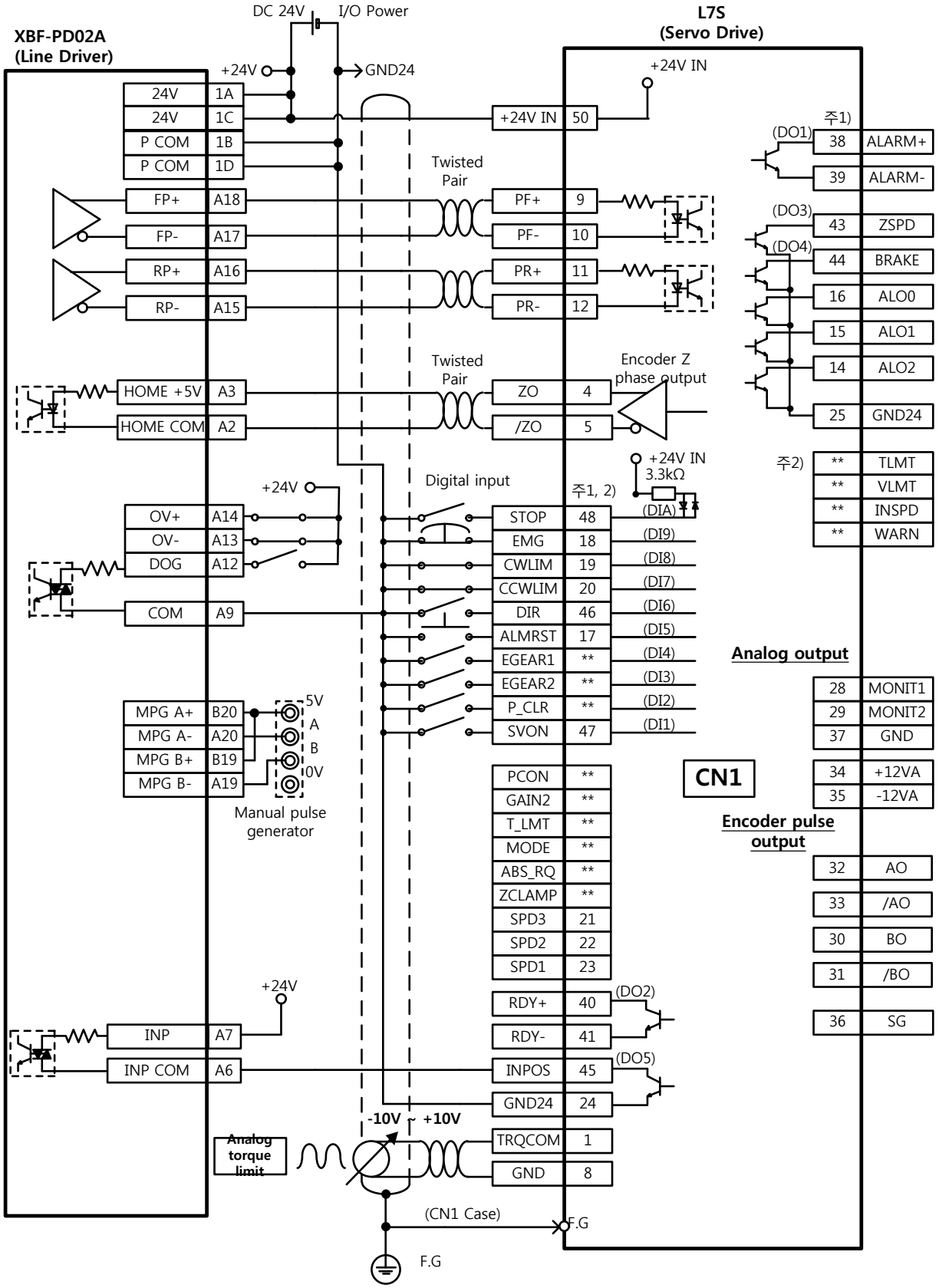

※ This is an example for the standard of 1 axis. To use 2 axis, refer to the pin diagram of positioning module.

6. XBM-DN**S (Open Collector)

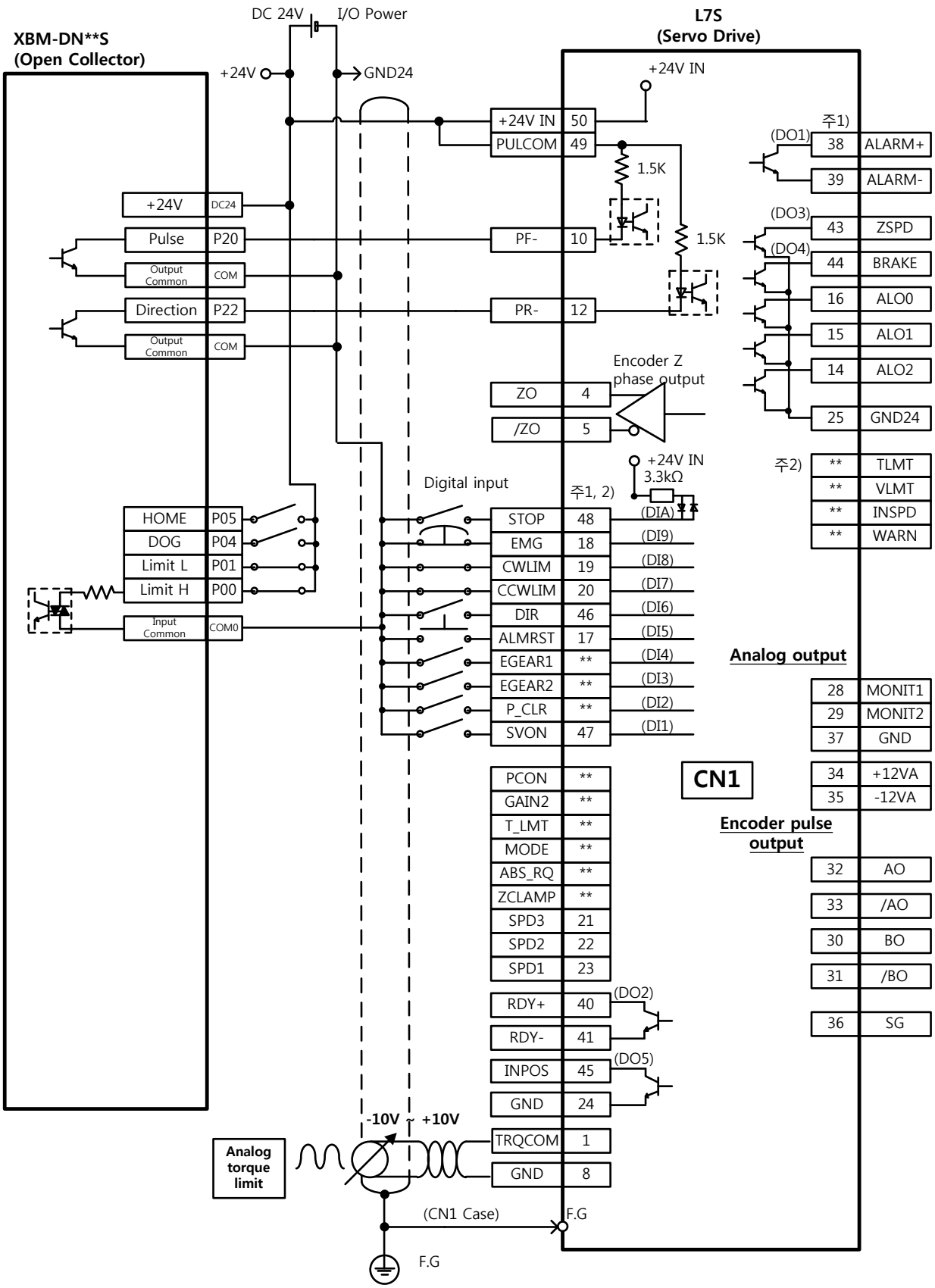

This is an example for the standard of 1 axis. To use 2 axis, refer to the pin diagram of positioning module.

7. XBC/XEC-DNxxH (Open Collector)

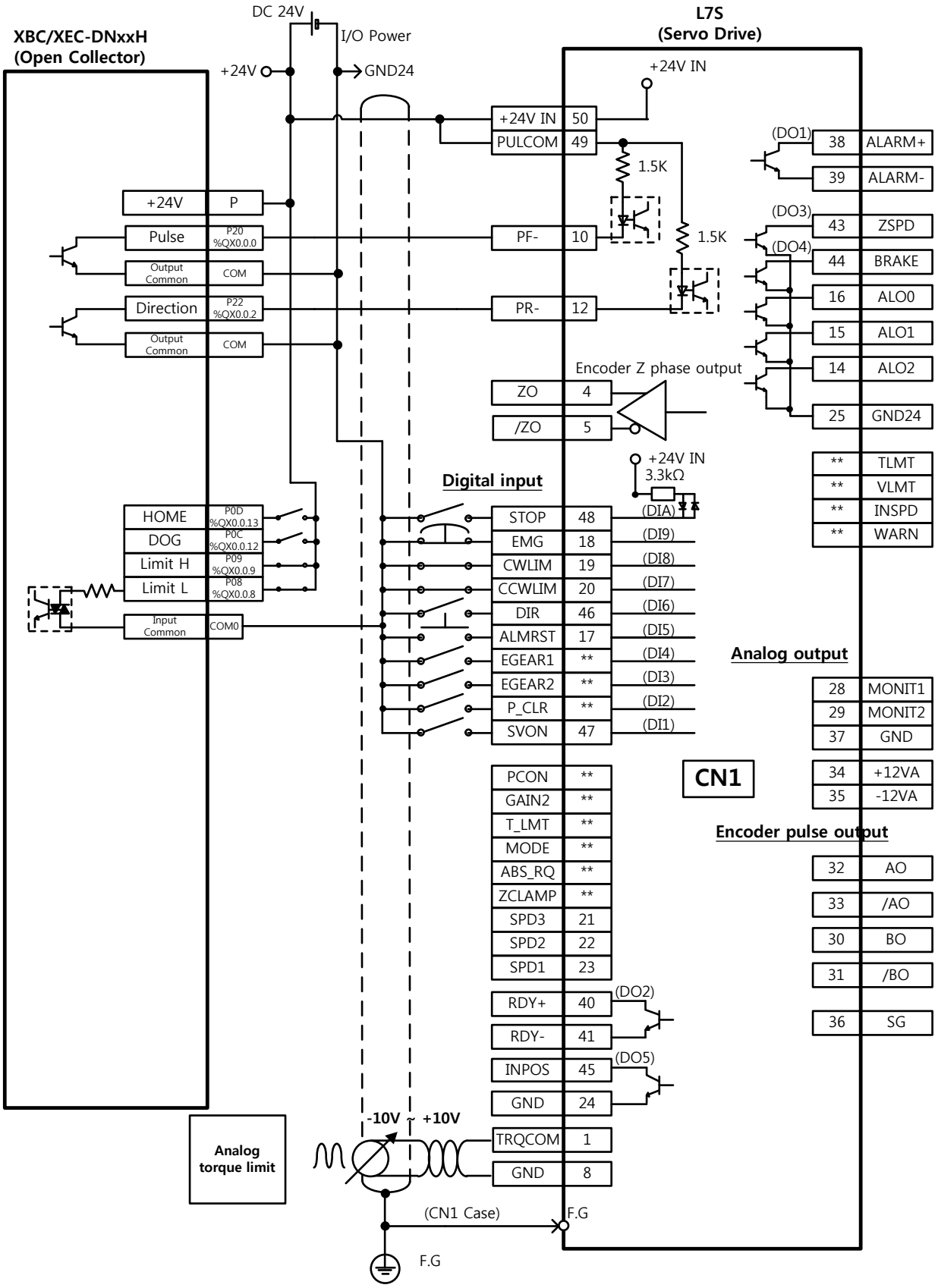

※ This is an example for the standard of 1 axis. To use 2 axis, refer to the pin diagram of positioning module .

3.4 Timing Diagram

3.4.1 Timing Diagram During Power Input

For XDL-L7 Series, connect single-phase power to the C1 and C2 terminals to supply power to the control circuit, and three-phase power to L1, L2, and L3 to supply power to the main circuit.

The servo signal becomes Ready after the maximum time of 120 [ms] that is required to reset the inside of the device. If you change the signal to ON, the servo operates in 40 [ms].

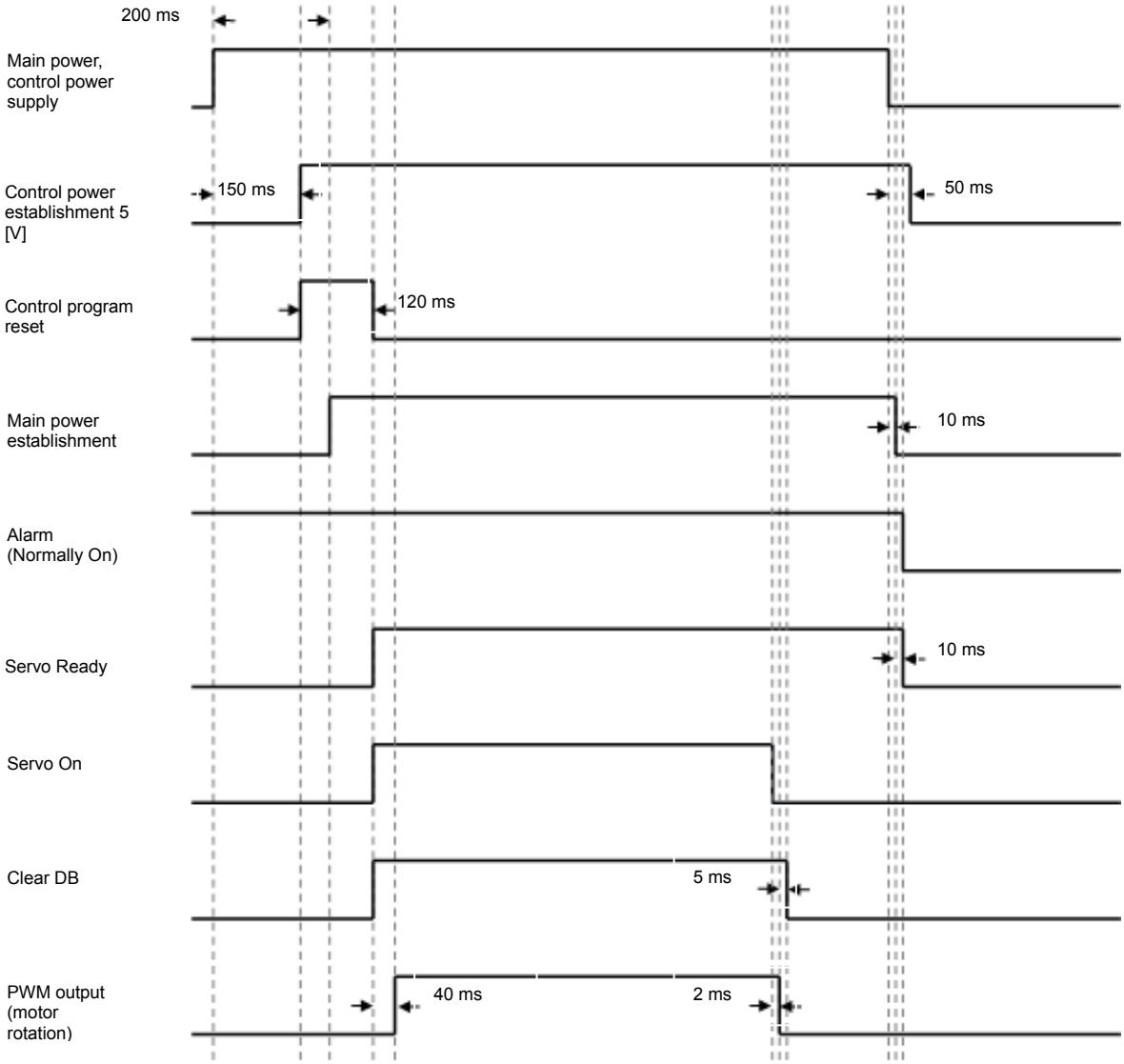

3.4.2 Timing Diagram at the Time of Alarm Trigger

When the alarm triggered in the servo drive, it blocks the PWM and the motor stops.

⚠ Caution
▪ After solving the problem that triggered the alarm, and changing the command signal (Servo ON) to OFF, reset the alarm.

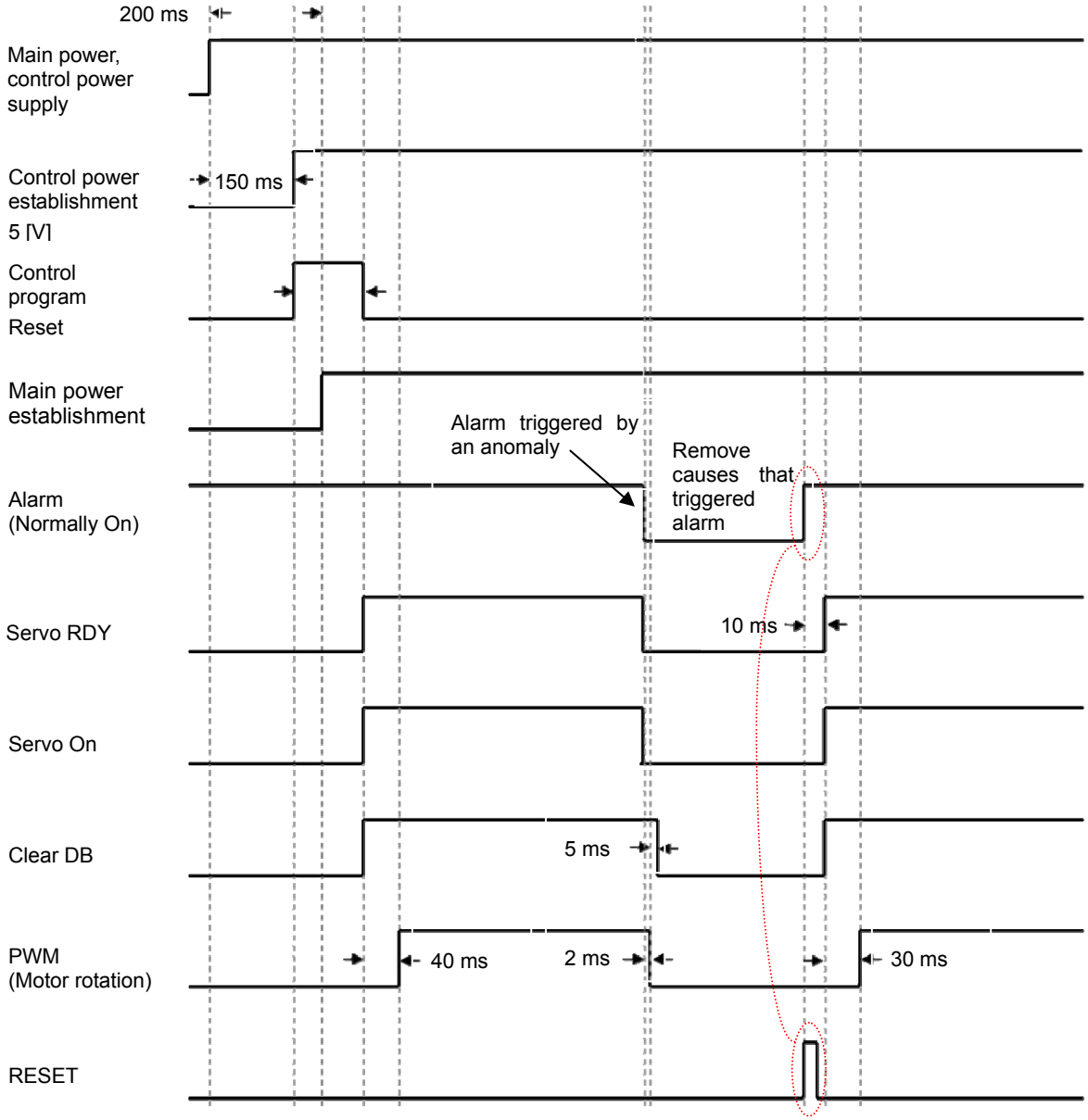

3.5 Control Signal Wiring

3.5.1 Contact Input Signal

⚠ Caution

1. There are two input contacts based on the characteristics of individual signals: contact A and contact B. They can be set by [P2-08] and [P2-09].
2. It is possible to turn each contact on or off forcibly with [Cn-07]. Take extra caution because each contact is automatically turned off when power is off.
3. The signal definition of each contact can be modified by [P2-00], [P2-01], [P2-02], [P2-03], and [P2-04].

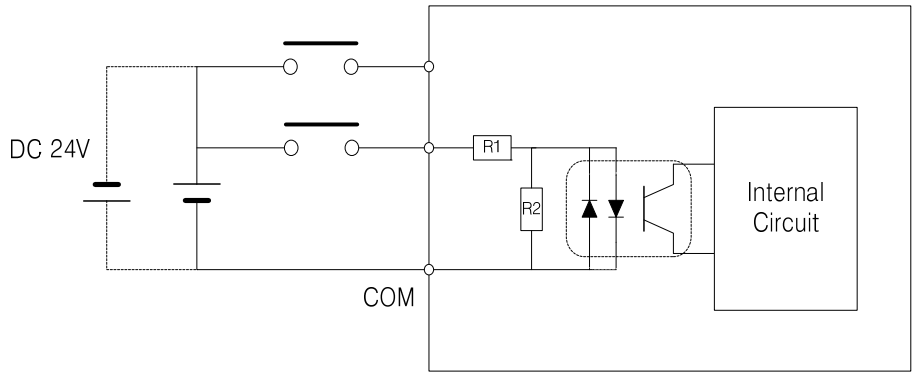

R1: 3.3 KΩ, R2: 680 Ω

3.5.2 Contact Output Signal

⚠ Caution

1. There are two output contacts based on the characteristics of individual signals: contact A and contact B. They can be set by [P2-10].
2. It is possible to turn each contact on or off forcibly with [Cn-08]. Take extra caution because each contact is automatically turned off when power is off.
3. The signal definition of each contact point can be modified by [P2-05], [P2-06], and [P2-07].
4. Overvoltage and overcurrent may cause damage because a transistor switch is used internally.
   - Rated voltage and current: DC 24 [V] ±10%, 120 [㎃]

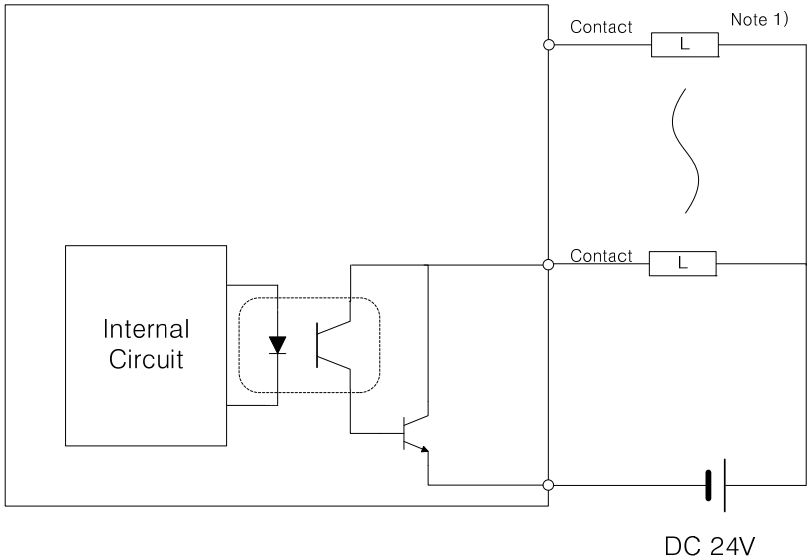

NOTE 1) For alarm and READY output signals, the GND24 terminal is separated.

3.5.3 Analog Input/Output Signals

1. Keep GND as 0 [V] of control power.
2. Keep the input signal command voltage within ±10 [V], and input impedance at 22 [㎏].
3. Output signal voltage for Monitor 1 (No. 28) and Monitor 2 (No. 29) is ±10 [V].

Configure wiring as shown in the following image when you adjust analog input with parameter resistance by using power supplied by the drive.

Do not exceed the maximum output capacity of 30 [㎃].

<Servo Drive >

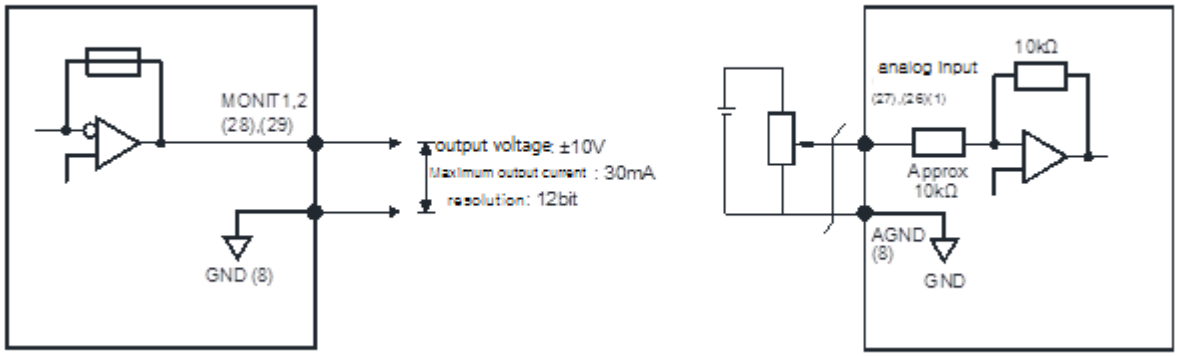

<Analog output>

<Analog input>

<Analog Input Example>

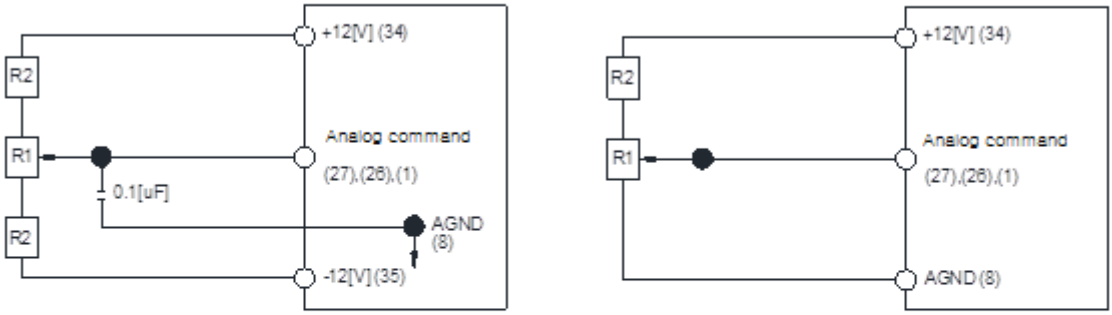

Type	R1	R2
sel,1	10[kΩ]	660[Ω]
sel,2	5[kΩ]	330[Ω]
sel,3	2[kΩ]	132[Ω]

3.5.4 Pulse Train Input Signal

(1) Line Driver (5 [V]) Pulse Input

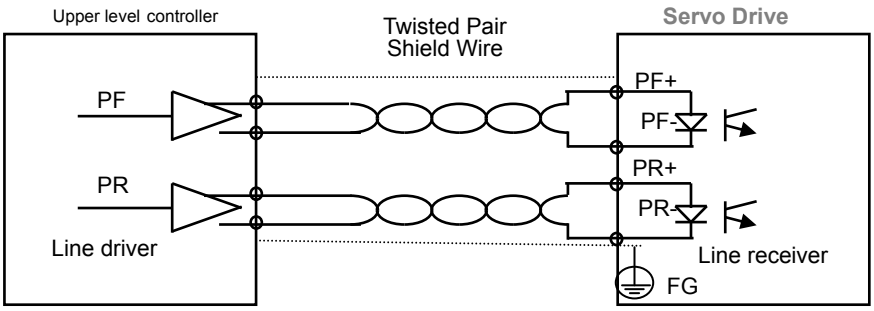

(2) Open Collector (24 [V]) Pulse Input

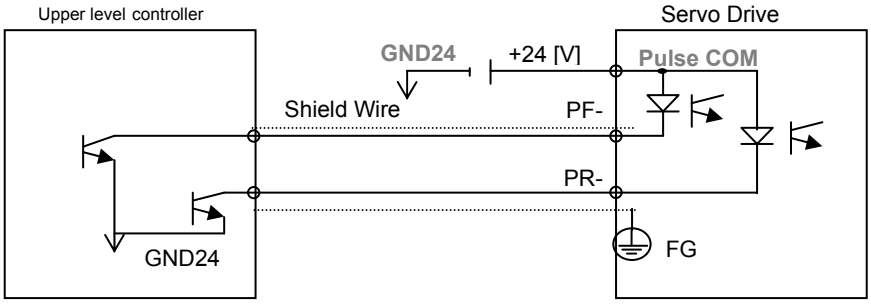

(3) 12 [V] or 5 [V] NPN Open Collector Pulse Command

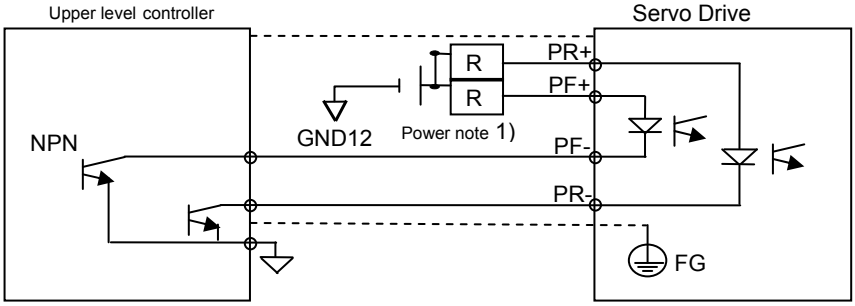

NOTE 1) When using 5 [V] power: Resistance R = 100-150 [Ω], 1/2 [W]
When using 12 [V] power: Resistance R = 560-680 [Ω], 1/2 [W]
When using 24 [V] power: Resistance R = 1.5 [kΩ], 1/2 [W]

(4) PNP Open Collector Pulse Command

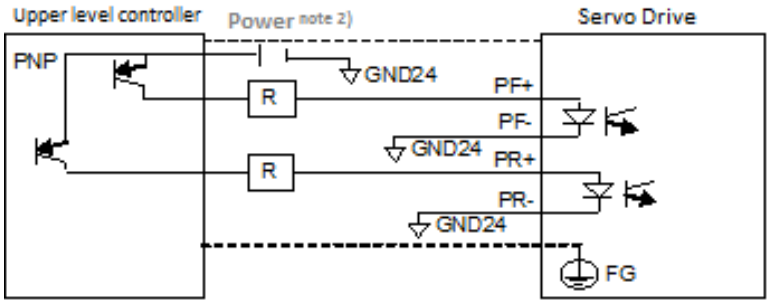

NOTE 1) When using 24 [V] power: Resistance R = 1.5 [kΩ], 1/2 [W]
When using 12 [V] power: Resistance R = 560-680 [Ω], 1/2 [W]
When using 5 [V] power: Resistance R = 100-150 [Ω], 1/2 [W]

3.5.5 Encoder Output Signal

Connect the GND terminal of the upper level controller and the GND terminal of CN1 because encoder signals are output based on the GND of control power.

Encoder signals for the servo motor received from CN2 are pre-scaled, according to the ratio defined by [P0-14] and output in line driver mode.

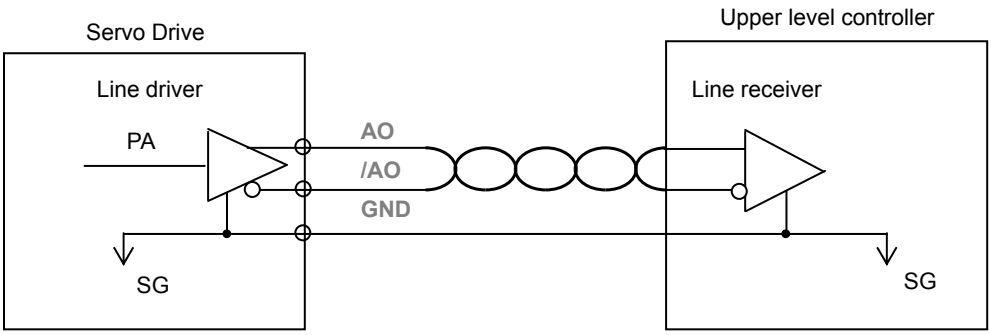

Set “1” on the 3rd bit in the menu [P0-17] ‘Function Select Bit',

It outputs open collector A,B,Z phases through existing AL0, AL1 and AL2 contact points.

(Output voltage 40mA and below, Maximum frequency 100Khz)

3.6 Quadrature Encoder Signaling Unit (CN2) Wiring

3.6.1 XLCS-E□□□AS Cable

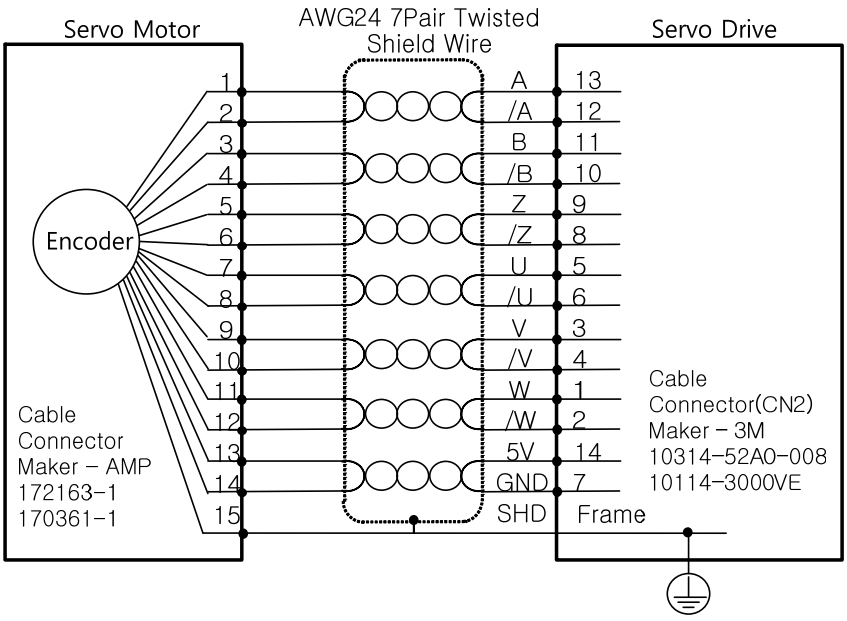

3.6.2 XLCS-E□□□BS Cable

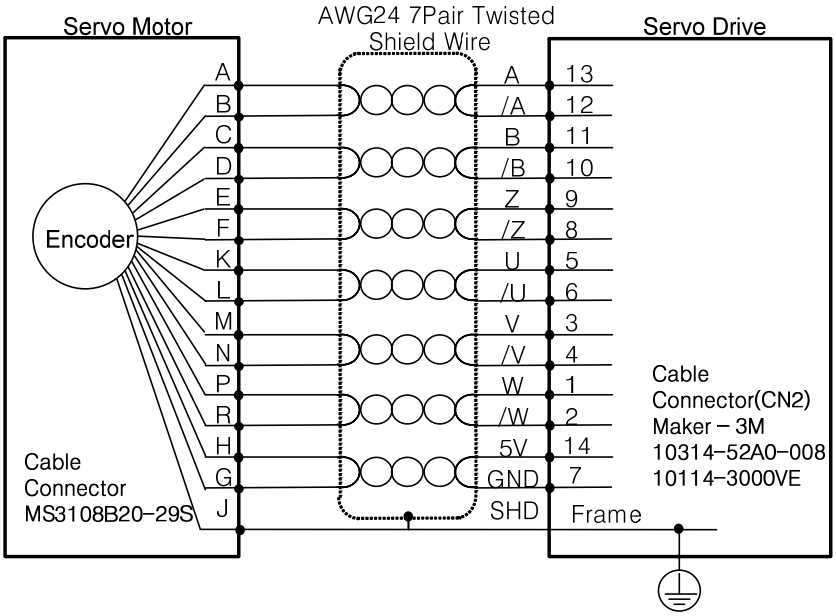

3.7 Serial Encoder Signaling Unit (CN2) Wiring

3.7.1 XLCS-E□□□CS Cable

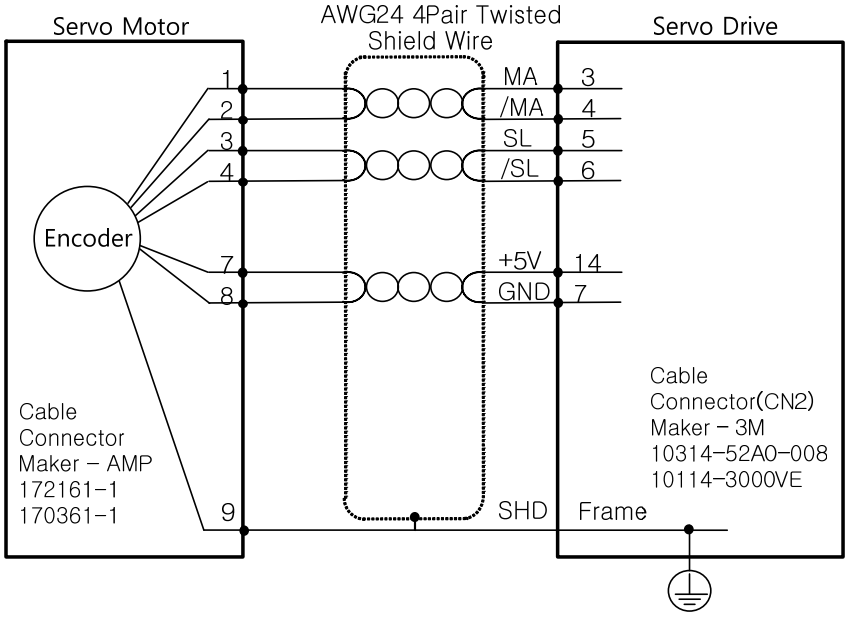

3.7.2 XLCS-E□□□DS Cable

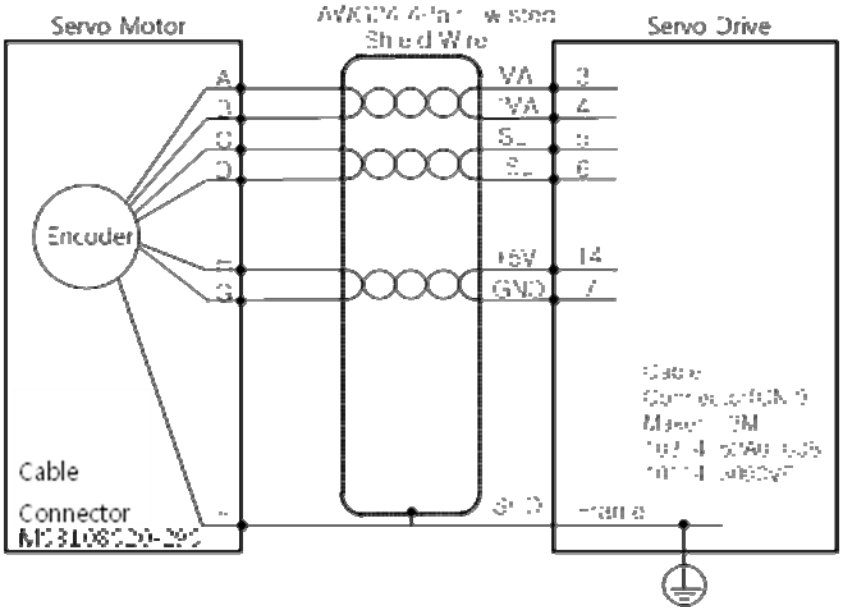

3.7.3 XLCS-E□□□ES Cable

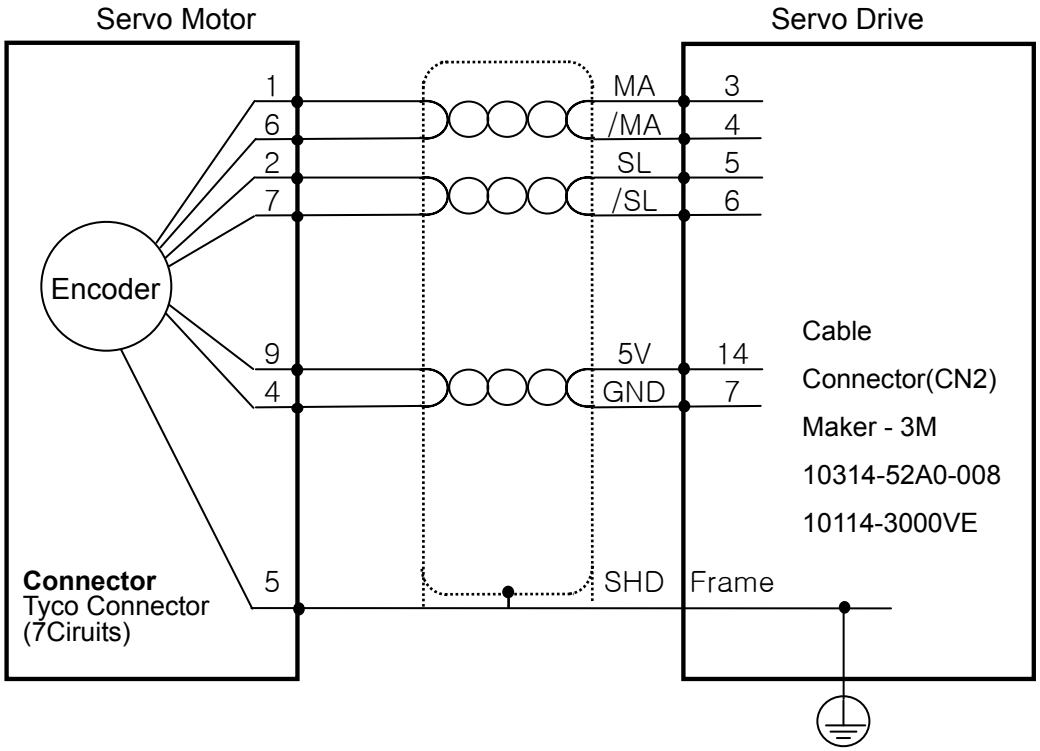

3.8 Multi Turn Encoder signal unit(CN2) wiring

3.8.1 XLCS-E□□□CS1 Cable

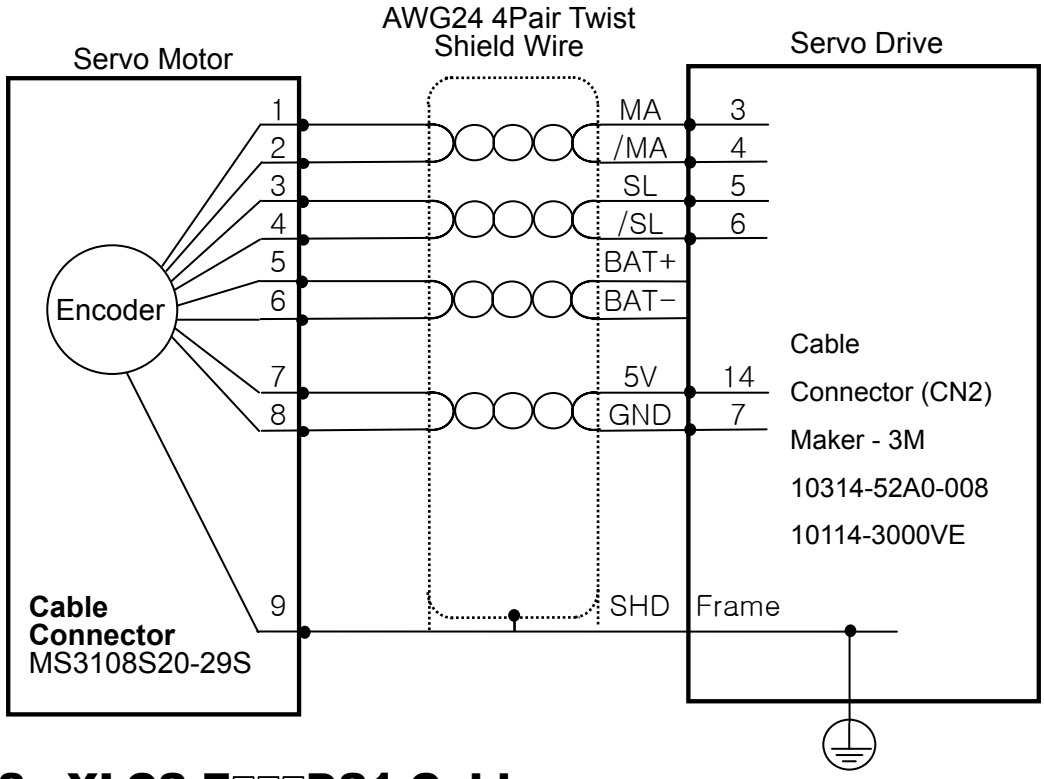

3.8.2 XLCS-E□□□DS1 Cable

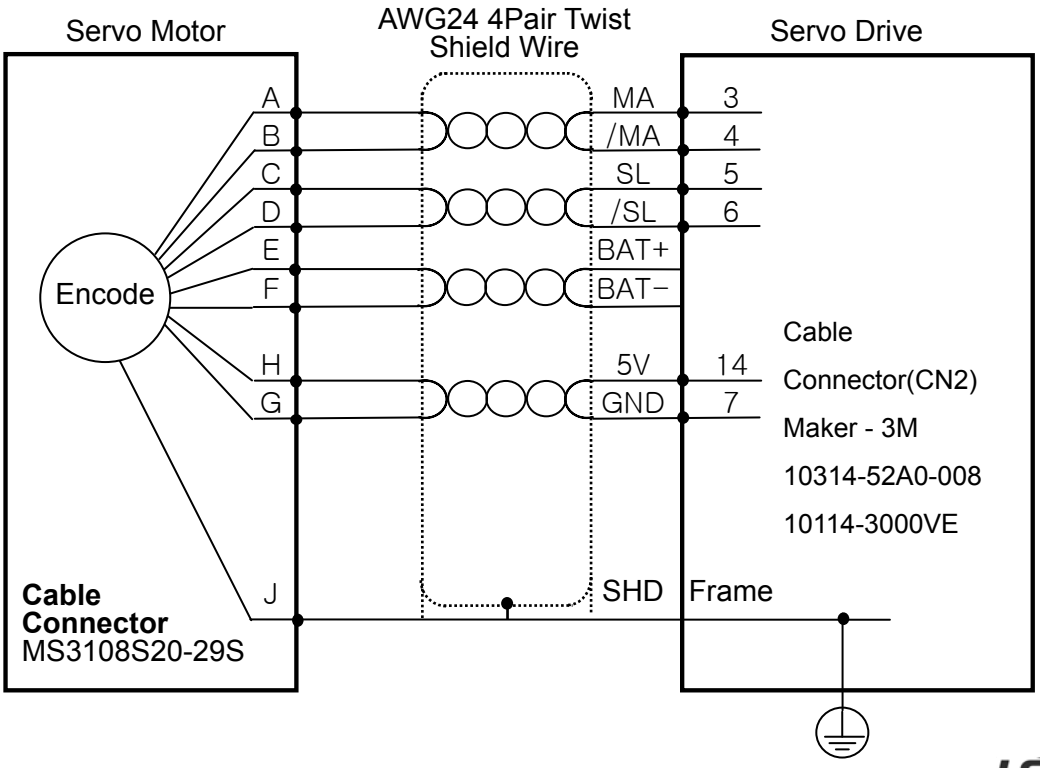

3.8.3 XLCS-E□□□ES1 Cable

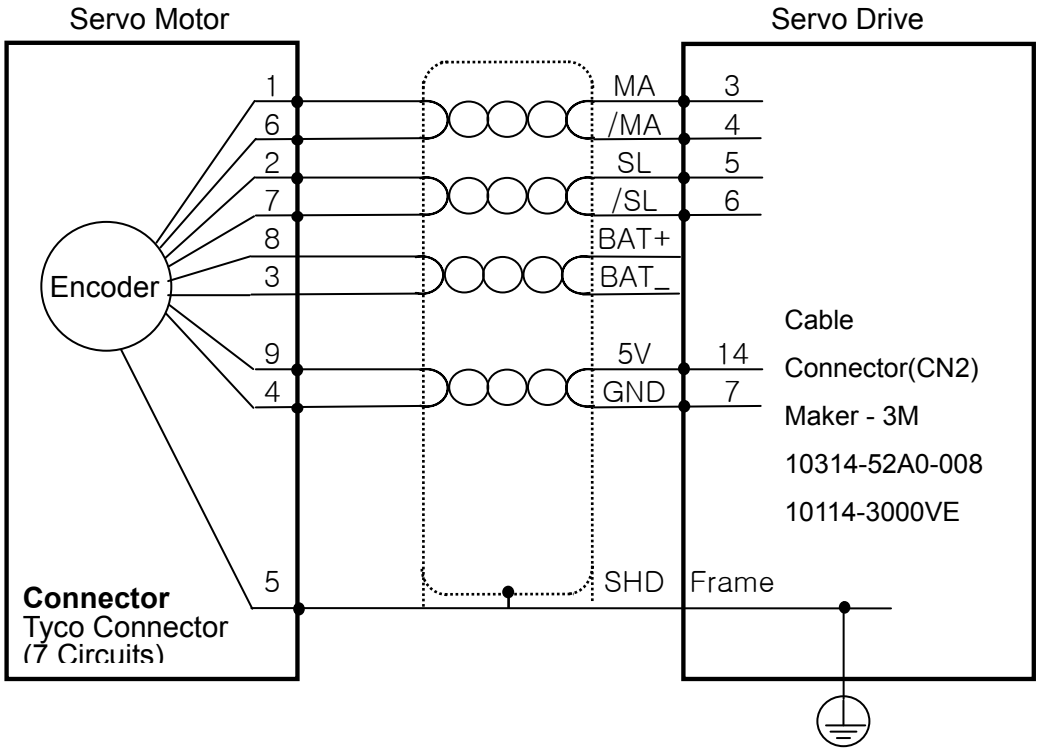

3.9 Transmission of Absolute Encoder Data

3.9.1 Transmission of Absolute Encoder Data

Upon the absolute encoder's request for absolute data, the data of the absolute encoder are transmitted to the upper level controller in the form of quadrature pulses through the output of the encoder output signals, AO and BO.

In this case, pulses are output at the speed of 500 [Kpps].

Among absolute data, multi-turn data are transmitted first, followed by single-turn data. (Refer to “4.1.6 External Input Signal and Logic Definition" for information on the allocation of the sequence input signal and ABS-RQ signal.)

■ Transmission Sequence of Absolute Data

1. When the servo is OFF, change the ABS_RQ signal on the upper level controller to ON.
2. The servo drive checks the ABS_RQ signal for 10 [ms].
3. The servo drive prepares the transmission of multi-turn data for 100 [ms].
4. The servo drive transmits multi-turn data for up to 140 [ms] (based on 16-bit multi-turn data).
5. The servo drive prepares the transmission of single-turn data for 100 [ms].
6. The servo drive transmits single-turn data with the pre-scaler ratio applied for up to 1100 [ms] (based on 19-bit single-turn data).
7. The servo drive operates with normal encoder output signals 100 [ms] after the single-turn data are completely transmitted.

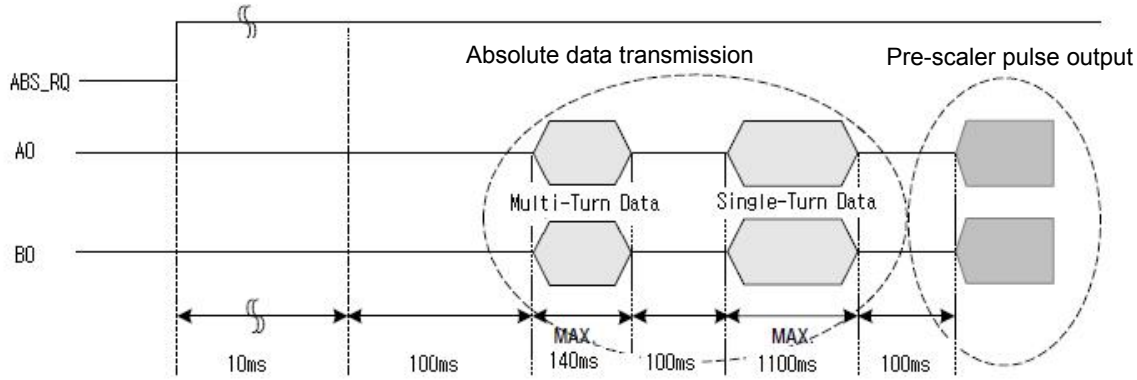

4 Parameters

4.1 How to Use the Loader

4.1.1 Names and Functions of Each Parts

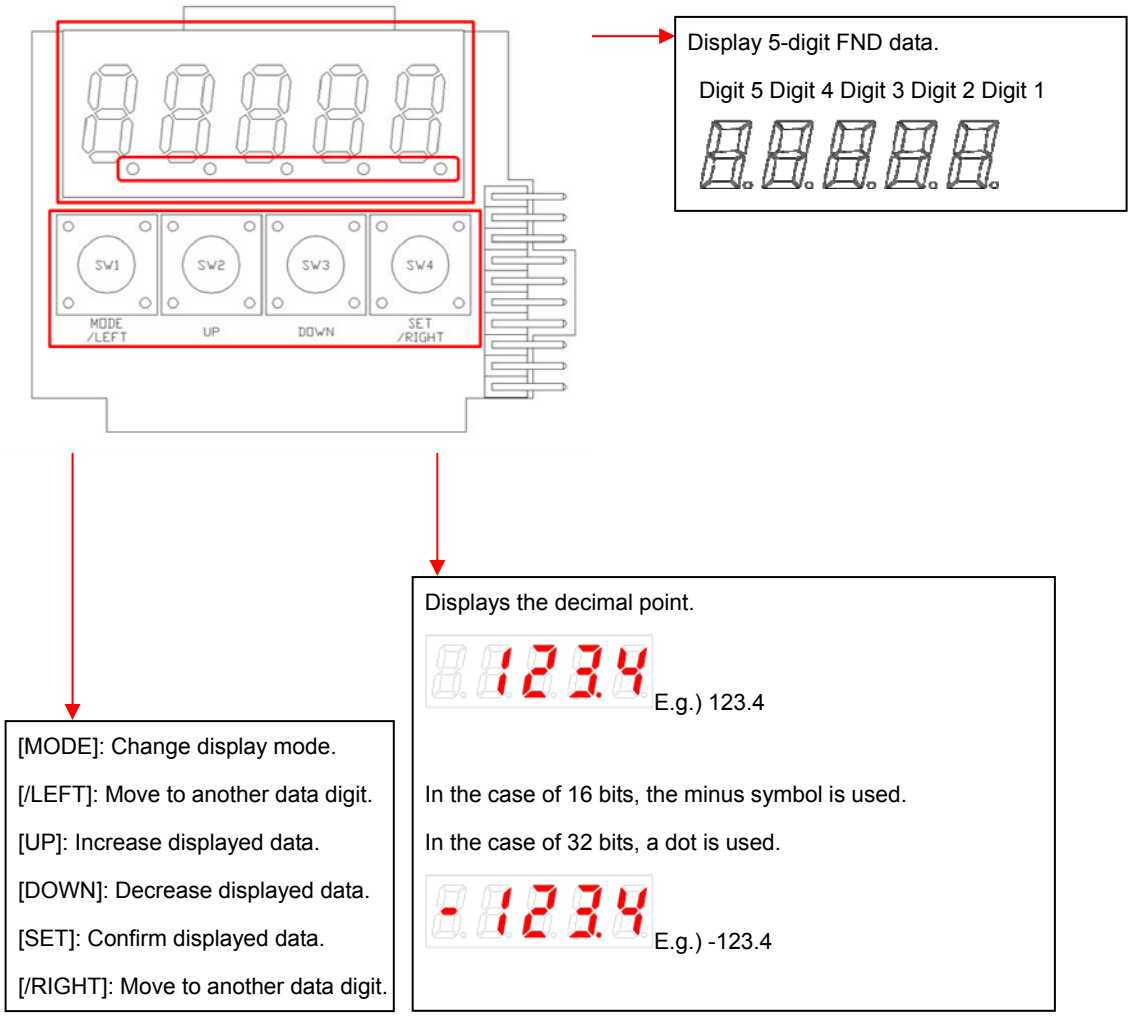

4.1.2 Status Summary Display

(1) Status Summary Display in Speed Mode

① Example of the OFF status of the servo in speed control mode

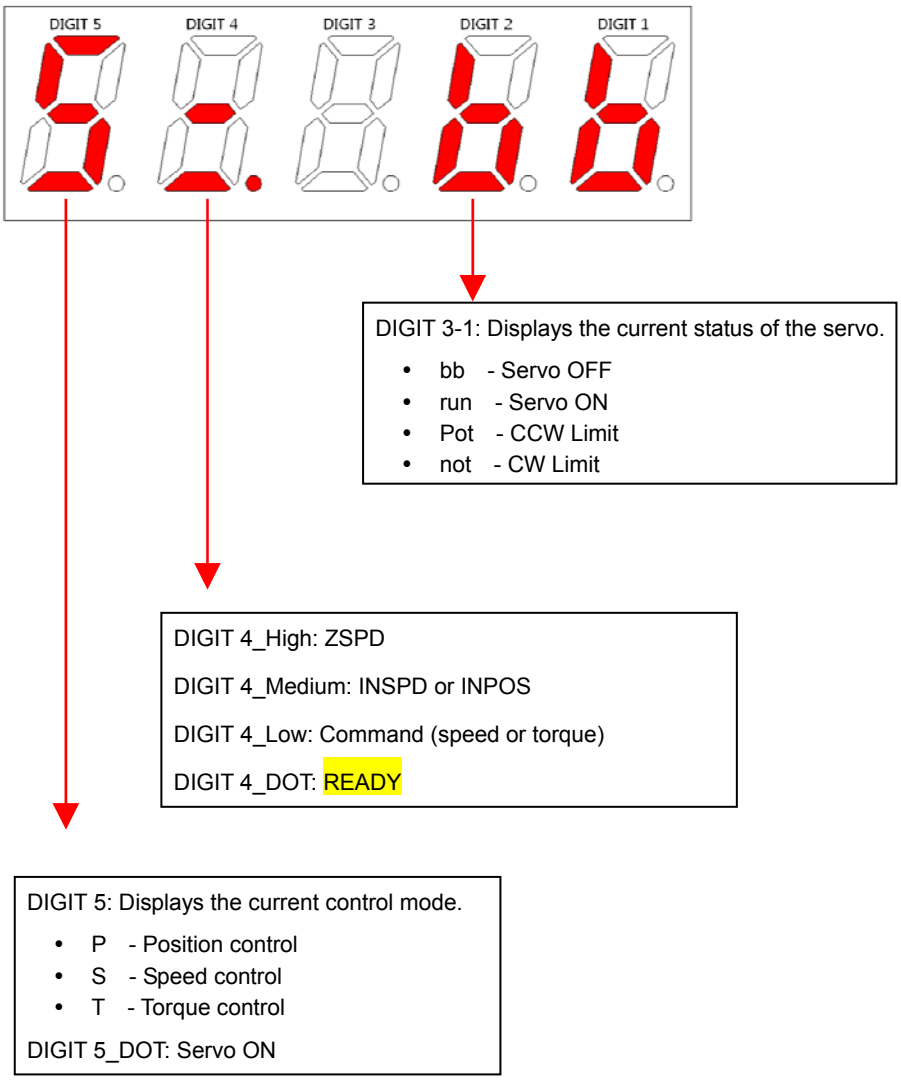

② Example of the ON status of the servo in speed control mode

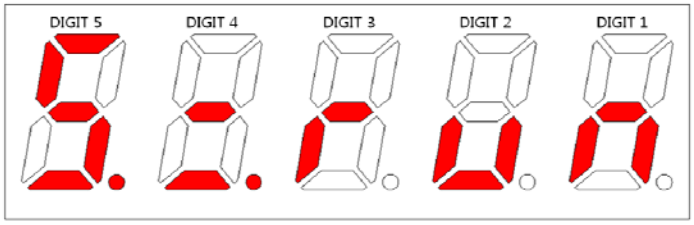

(2) Servo Operation Status Summary Display List

The following list explains the operation status summary display of different modes of the servo.

Operation Status Screen	Function	Notes
P-bb	Displays the servo's OFF status when in the position mode.	
P-run	Displays the servo's ON status when in position mode.	
P-Pot	Displays CCW status when in position mode.	
P-not	Displays CW status when in position mode.	
S-bb	Displays the servo's OFF status when in speed mode.	
S-run	Displays the servo's ON status when in speed mode.	
S-Pot	Displays CCW status when in speed mode.	
S-not	Displays CW status when in speed mode.	
t-bb	Displays the servo's OFF status when in torque mode.	
t-run	Displays the servo's ON status when in torque mode.	
t-Pot	Displays CCW status when in torque mode.	
t-not	Displays CW status when in torque mode.	

4.1.3 Parameter Handling

(1) Parameter Movement

Example of changing speed control mode to position control mode ([P0-03]: 00001 -> 00002)

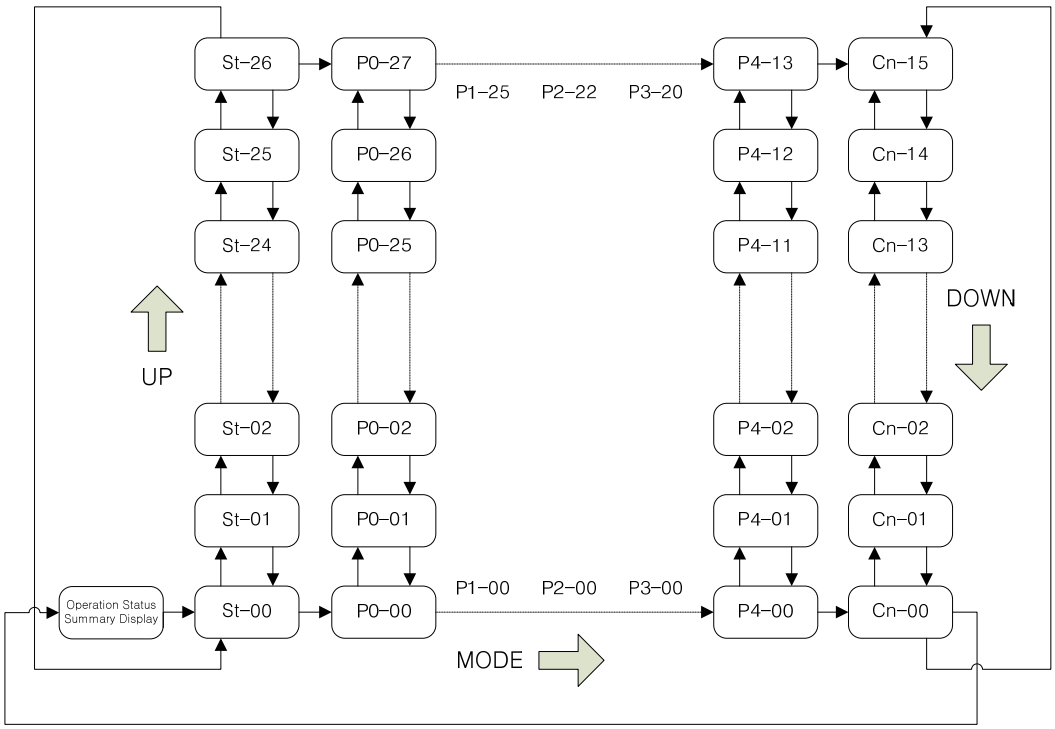

- If the alarm does not go off at the starting operation, the speed operation mode [S=bb] indicating operation status is displayed.
- Editable parameters are from [P0-00] to [Cn-15]. Press [SET] when a parameter number is displayed and you can see and edit the parameter data.
- In the initial parameter edit status, the number on the far right flickers (ON and OFF for 0.5 seconds respectively) and becomes editable.

(2) Example of changing speed control mode to position control mode ([P0-03]: 00001 -> 00002)

Order	Loader Displays	Keys to Use	What to Do
1	Sc. bb		Displays the speed control mode with main power and control power permitted.
2	P0-00		Press [MODE] to move to [P0-00].
3	P0-03		Press [UP] or [DOWN] to move to [P0-03].
4	00001		Press [SET] to go to the parameter edit window. The parameter is displayed as 00001.
5	00002		Press [UP] or [DOWN] at the blinking cursor to change the number to 00002.
6	00002		Press and hold [SET] for approximately one second. After two flickers, the number will be saved as 00002 in the parameter.
7	P0-03		Press and hold [MODE] for approximately one second to return to the P0-03 parameter.
8	Pc. bb		Press [MODE] to change status to position operation [P= bb] status which is the summary display of the current status.

NOTE 1) "▯" indicates flickering.

If you hold down [UP] / [DOWN] at the current cursor in the parameter window, the number continues to increase/decrease.

(3) Example of changing speed proportional gain 2 ([P1-07]: 200 [rad/s] -> 500 [rad/s])

Order	Loader Displays	Keys to Use	What to Do
1			Displays the speed control mode with main power and permitted control power.
2			Press [MODE] to move to [P1-00].
3	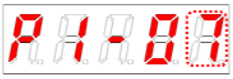		Press [UP] or [DOWN] to move to [P1-07].
4			Press [SET] to enter parameter edit mode. The parameter is displayed as 00200.
5			Press [/LEFT] or [/RIGHT] at the blinking cursor to move to the desired digit, DIGIT 3.
6			Press [UP] or [DOWN] at the blinking DIGIT 3 position to change the number to 00500.
7		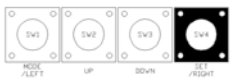	Press and hold [SET] for approximately one second. After two flickers, the number will be saved as 00500 in the parameter.
8			Press and hold [MODE] for approximately one second to return to [P1-07].

NOTE 1) "▯" indicates flickering.

If you hold down [UP] / [DOWN] at the current cursor in the parameter window, the number continues to increase/decrease.

(4) Example of changing DAC output offset 1 ([P0-19]: 0 [Unit/V] -> -500 [Unit/V])

Order	Loader Displays	Keys to Use	What to Do
1			Displays the speed control mode with main power and control power permitted.
2		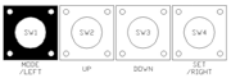	Press [MODE] to move to [P0-00].
3		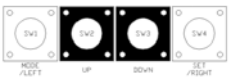	Press [UP] or [DOWN] to move to [P0-19].
4		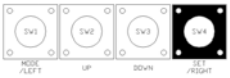	Press [SET] to enter parameter edit mode. The parameter is displayed as 00000.
5			Press [/LEFT] or [/RIGHT] at the blinking cursor to move to the desired digit, DIGIT 3.
6			Press [UP] or [DOWN] at the blinking DIGIT 3 position to change the number to -0500.
7			Press and hold [SET] for approximately one second. After two flickers, the number will be saved as -0500 in the parameter.
8			Press and hold [MODE] for approximately one second to return to [P0-19].

NOTE 1) "▯" indicates flickering.

If you hold down [UP] / [DOWN] at the current cursor in the parameter window, the number continues to increase/decrease.

4.1.4 Data Display

(1) Binary

① Minimum (0b00000)

② Maximum (0b11111)

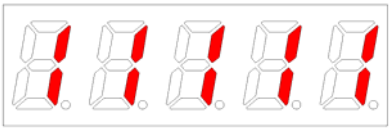

(2) Hex

① Minimum (0x0000)

② Maximum (0xFFFF)

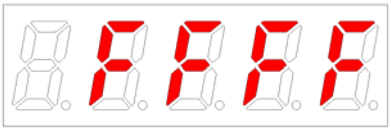

(3) 16-bit Unsigned Integer

① E.g.) 0

② E.g.) +1234

(4) 16-bit Signed Integer

① E.g.) -1234

② E.g.) +5678

① E.g.) -1234

② E.g.) +5678

(5) 16-bit Decimal Point Display

① E.g.) -123.4

② E.g.) +123.4

① E.g.) -123.4

② E.g.) +123.4

(6) 32-bit Signed Integer Data Display

① Minimum (-2147483648)

Display upper two digits

Display middle four digits

Display lower four digits

② Maximum (2147483647)

Display upper two digits

Display middle four digits

Display lower four digits

■ E.g.) [St-16]: Displayed as Upper = 0, Middle = 0012, and Lower = 2071

Order	Loader Displays	Keys to Use	What to Do
1		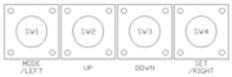	Displays the speed control mode with main power and control power permitted.
2			Press [MODE] to move to [St-00].
3			Press [UP] or [DOWN] to move to [St-16].
4		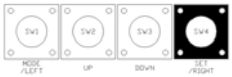	Press [SET] to display lower digit data.
5			Each time you press [/LEFT] or [/RIGHT] lower, middle, and upper data is displayed.
6			Each time you press [/LEFT] or [/RIGHT] lower, middle, and upper data is displayed.
7	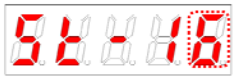		Press and hold [MODE] for approximately one second to return to [St-16].

NOTE 1) "▯" indicates flickering.

4.1.5 External Input Contact Signal Display [St-14]

You can check whether the ON/OFF status of digital input/output signals that access the servo drive are on or off.

(1) External Input Signal Display

The positions of the seven segment LEDs and CN1 connector pins correspond as follows.

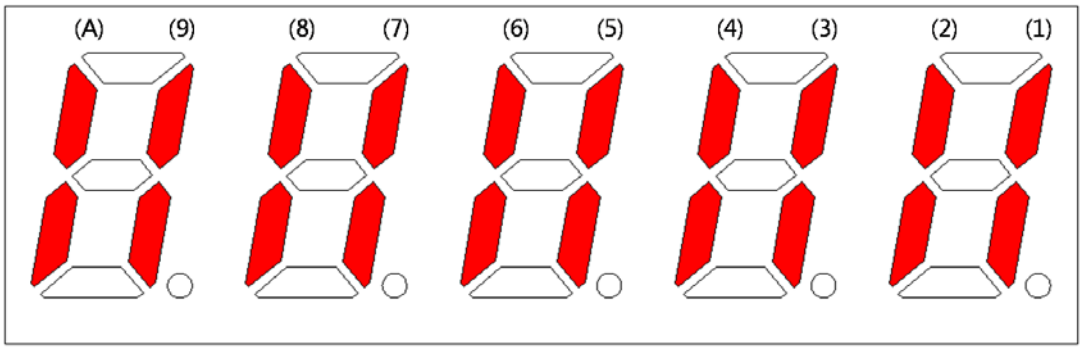

If an LED that corresponds to a pin is turned on/off, it indicates ON/OFF accordingly.

- Input Contact Display

Number	(A)	(9)	(8)	(7)	(6)	(5)	(4)	(3)	(2)	(1)
Contact Number	DIA	DI9	DI8	DI7	DI6	DI5	DI4	DI3	DI2	DI1
CN1 Pin number	48	18	19	20	46	17	21	22	23	47
Allocated default Signal name	STOP	EMG	CWLIM	CCWLIM	DIR	ALMRST	SPD3	SPD2	SPD1	SVON

4.1.6 External Input Signal and Logic Definition

The following describes how to allocate input signals and how to view them.

(1) Input Signal Allocation

XDL-L7 Drive allows for the allocation of a total of 19 input contact functions to 10 hardware contacts.

Each of the input contact functions is located at the designated digit of parameter [P2-00], [P2-01], [P2-02], [P2-03], or [P2-04]. Changing the value of the digit allows allocation to pins DI1 through DIA

The default input signal allocation is as follows:

One number can be allocated to two input signals such as N (input signal): 1 (input allocation number).

E.g.) If SVON and SPD1 are allocated to DI #01, you can use both the SVON signal and the SPD1 signal when entering DI #01.

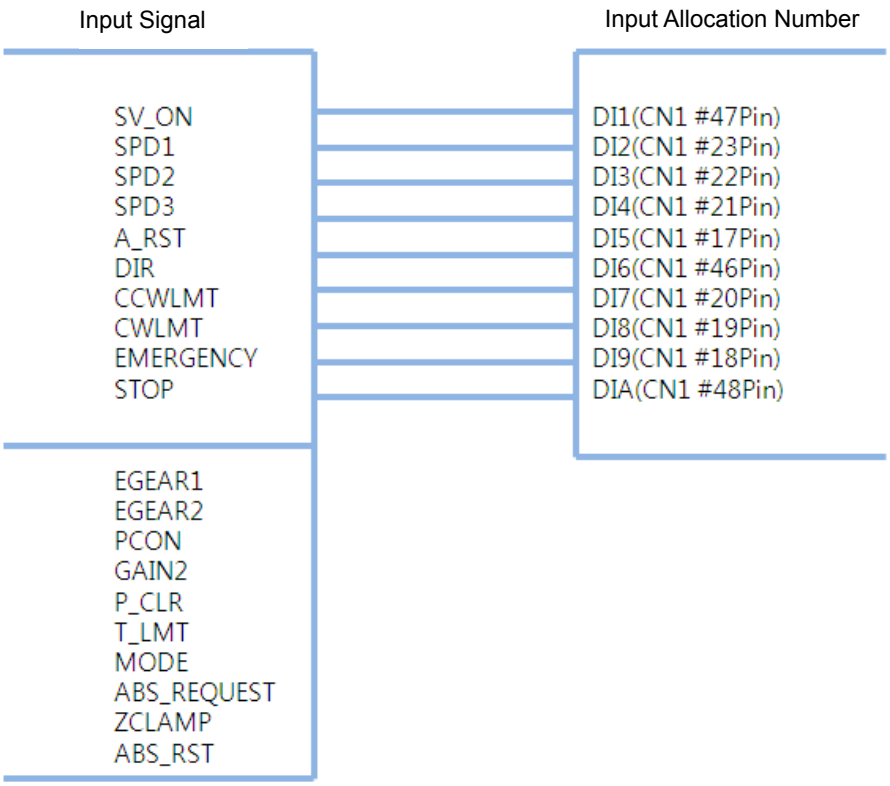

⚠ Caution
If you change the input contact function, Since it is an immediate effect on the drive, you need to be careful for the operation. Before change, recommended to be set 'EEPROM save no use' in DIGIT 5 of [P0-17] parameter ..

Signal Name / Parameter Allocation	Input Signal	Always Allocated	CN1 Pin Default Allocation Number										No Allocation	Input Signal Definition	Default setting
			48	18	19	20	46	17	21	22	23	47			
Servo ON [P2-00].Set Digit 1	SVON	F	A	9	8	7	6	5	4	3	2	1	0	[P2-00]	0x4321
Multi-speed 1 [P2-00]. Set Digit 2	SPD1	F	A	9	8	7	6	5	4	3	2	1	0		
Multi-speed 2 [P2-00]. Set Digit 3	SPD2	F	A	9	8	7	6	5	4	3	2	1	0		
Multi-speed 3 [P2-00]. Set Digit 4	SPD3	F	A	9	8	7	6	5	4	3	2	1	0		
Alarm reset [P2-01]. Set Digit 1	ALMRST	F	A	9	8	7	6	5	4	3	2	1	0	[P2-01]	0x8765
Select rotation direction [P2-01]. Set Digit 2	DIR	F	A	9	8	7	6	5	4	3	2	1	0		
Forward rotation prohibited [P2-01]. Set Digit 3	CCWLIM	F	A	9	8	7	6	5	4	3	2	1	0		
Reverse rotation prohibited [P2-01]. Set Digit 4	CWLIM	F	A	9	8	7	6	5	4	3	2	1	0		
Emergency stop [P2-02]. Set Digit 1	EMG	F	A	9	8	7	6	5	4	3	2	1	0	[P2-02]	0x00A9
Stop [P2-02]. Set Digit 2	STOP	F	A	9	8	7	6	5	4	3	2	1	0		
Electronic gear ratio 1 [P2-02]. Set Digit 3	EGEAR1	F	A	9	8	7	6	5	4	3	2	1	0		
Electronic gear ratio 2 [P2-02]. Set Digit 4	EGEAR2	F	A	9	8	7	6	5	4	3	2	1	0		
P control action [P2-03]. Set Digit 1	PCON	F	A	9	8	7	6	5	4	3	2	1	0	[P2-03]	0x0000
Select gain 2 [P2-03]. Set Digit 2	GAIN2	F	A	9	8	7	6	5	4	3	2	1	0		
Error pulse clear [P2-03]. Set Digit 3	P_CLR	F	A	9	8	7	6	5	4	3	2	1	0		
Torque limit [P2-03]. Set Digit 4	T_LMT	F	A	9	8	7	6	5	4	3	2	1	0		
Change operation modes [P2-04]. Set Digit 1	MODE	F	A	9	8	7	6	5	4	3	2	1	0	[P2-04]	0x0000
Absolute encoder data request [P2-04]. Set Digit 2	ABS_RQ	F	A	9	8	7	6	5	4	3	2	1	0		
Zero clamp [P2-04]. Set Digit 3	ZCLAMP	F	A	9	8	7	6	5	4	3	2	1	0		
Reset absolute encoder data [P2-04]. Set Digit 4	ABS_RST	F	A	9	8	7	6	5	4	3	2	1	0		

NOTE 1) CN1 connector pin is not allocated when the default value is "0".

NOTE 2) For ABS_RST Signal, hold “High” for 500ms or longer in order to reset absolute encoder data.

(2) Example of Changing Input Signal Allocation

The input signal definition can be changed in [P2-00], [P2-01], [P2-02], [P2-03], and [P2-04].

The input signal logic definition can be changed in [P2-08] and [P2-09].

Allocate input signals as shown in the following table:

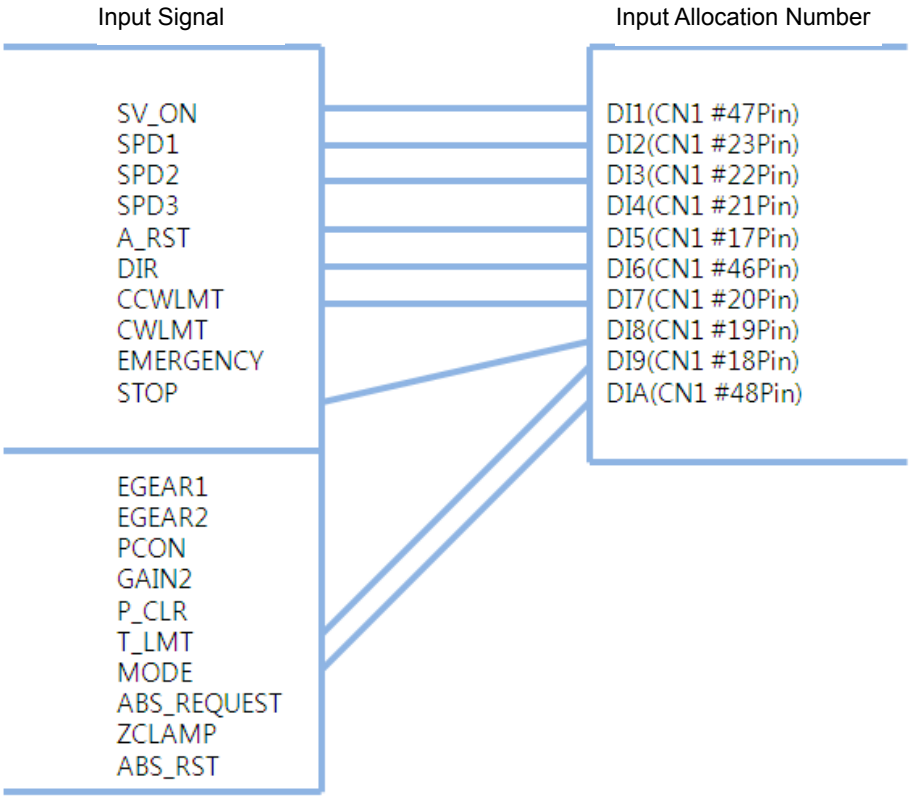

Signal Name / Parameter Allocation	Input Signal	Always Allocated	CN1 Pin Default Allocation Number										No Allocation	Input Signal Definition	Value After Changing
			48	18	19	20	46	17	21	22	23	47			
Servo ON [P2-00].Set Digit 1	SVON	F	A	9	8	7	6	5	4	3	2	1	0	[P2-00]	0x0321
Multi-speed 1 [P2-00]. Set Digit 2	SPD1	F	A	9	8	7	6	5	4	3	2	1	0		
Multi-speed 2 [P2-00]. Set Digit 3	SPD2	F	A	9	8	7	6	5	4	3	2	1	0		
Multi-speed 3 [P2-00]. Set Digit 4	SPD3	F	A	9	8	7	6	5	4	3	2	1	0		
Alarm reset [P2-01]. Set Digit 1	ALMRST	F	A	9	8	7	6	5	4	3	2	1	0	[P2-01]	0x0765
Select rotation direction [P2-01]. Set Digit 2	DIR	F	A	9	8	7	6	5	4	3	2	1	0		
Forward rotation prohibited [P2-01]. Set Digit 3	CCWLIM	F	A	9	8	7	6	5	4	3	2	1	0		
Reverse rotation prohibited [P2-01]. Set Digit 4	CWLIM	F	A	9	8	7	6	5	4	3	2	1	0		
Emergency stop [P2-02]. Set Digit 1	EMG	F	A	9	8	7	6	5	4	3	2	1	0	[P2-02]	0x0080
Stop [P2-02]. Set Digit 2	STOP	F	A	9	8	7	6	5	4	3	2	1	0		
Electronic gear ratio 1 [P2-02]. Set Digit 3	EGEAR1	F	A	9	8	7	6	5	4	3	2	1	0		
Electronic gear ratio 2 [P2-02]. Set Digit 4	EGEAR2	F	A	9	8	7	6	5	4	3	2	1	0		
P control action [P2-03]. Set Digit 1	PCON	F	A	9	8	7	6	5	4	3	2	1	0	[P2-03]	0x9000
Select gain 2 [P2-03]. Set Digit 2	GAIN2	F	A	9	8	7	6	5	4	3	2	1	0		
Error pulse clear [P2-03]. Set Digit 3	P_CLR	F	A	9	8	7	6	5	4	3	2	1	0		
Torque limit [P2-03]. Set Digit 4	T_LMT	F	A	9	8	7	6	5	4	3	2	1	0		
Change operation modes [P2-04]. Set Digit 1	MODE	F	A	9	8	7	6	5	4	3	2	1	0	[P2-04]	0x000A
Absolute encoder data request [P2-04]. Set Digit 2	ABS_RQ	F	A	9	8	7	6	5	4	3	2	1	0		
Zero clamp [P2-04]. Set Digit 3	ZCLAMP	F	A	9	8	7	6	5	4	3	2	1	0		
Reset absolute encoder data [P2-04]. Set Digit 4	ABS_RST	F	A	9	8	7	6	5	4	3	2	1	0		

NOTE 1) CN1 connector pin is not allocated when the default value is "0".

NOTE 2) For ABS_RST Signal, hold “High” for 500ms or longer in order to reset absolute encoder data.

■ Examples of Changing Input Signal Allocation

The following is an example of changing input signal allocation.

The allocation signals of SVON (CN1-47) and STOP (CN1-48) can be switched in the following sequence.

	Before Changing	After Changing
[P2-00]:	04321	0432A
[P2-02]:	000A9	00019

Order	Loader Displays	Keys to Use	What to Do
1	P2-00		Press [MODE] to move to [P2-00].
2	04321		Press [SET] to enter parameter edit mode. The parameter is displayed as 04321.
3	0432A		Press [UP] or [DOWN] at the blinking cursor to change the number to 0432A.
4	0432A		Hold down [SET] for approximately one second. After two flickers, the number is saved as 0432A for the parameter.
5	P2-00		Hold down [MODE] for approximately one second to return to [P2-00].
6	P2-02		Press [UP] or [DOWN] at the blinking cursor to change the number to P2-02.
7	000A9		Press [SET] to enter parameter edit mode. The parameter is displayed as 000A9.
8	00009		Press [/LEFT] or [/RIGHT] at the blinking cursor to move to the desired digit, DIGIT 2.
9	00019		Press [UP] or [DOWN] at the blinking cursor to change the number to 00019.
10	00019		Hold down [SET] for approximately one second. After two flickers, the number is saved as 00019 for the parameter.
11	P2-02		Hold down [MODE] for approximately one second to return to [P2-02].
12	** Modification is not possible with the servo on &. Reset the parameter.		
※	In case of exiting without saving the set value		Hold down [MODE] for approximately one second to return to the parameter.

NOTE 1) "▯" indicates flickering.

(3) Input signal logic definition

XDL-L7 Drive allows for defining the logic of input signals for 10 hardware contacts from DI1 to DIA through parameters [P2-08] and [P2-09].

The logic of input signals as set in the factory is as follows.

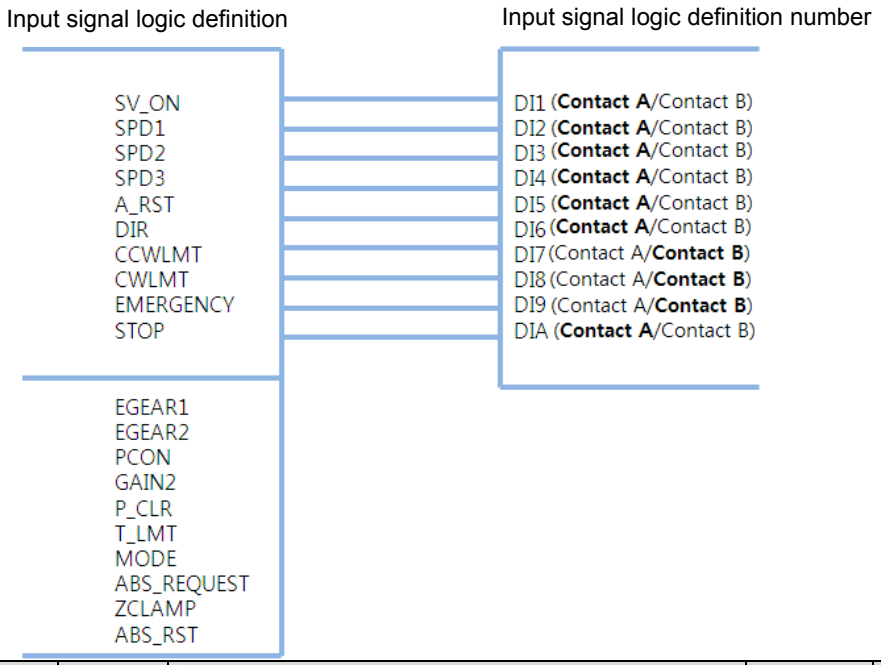

Signal Name / Parameter Allocation	Input Signal (Initial name)	CN1 Pin Default Allocation Number										Contact B	Input signal logic setting	Default setting
		48	18	19	20	46	17	21	22	23	47			
Servo ON [P2-08].Set Digit 1	SVON										1	0	[P2-08]	0x11111
Multi-speed 1 [P2-08]. Set Digit 2	SPD1									1		0		
Multi-speed 2 [P2-08]. Set Digit 3	SPD2								1			0		
Multi-speed 3 [P2-08]. Set Digit 4	SPD3							1				0		
Alarm reset [P2-08]. Set Digit 5	ALMRST						1					0		
Select rotation direction [P2-09]. Set Digit 1	DIR					1						0	[P2-09]	0x10001
Forward rotation prohibited [P2-09]. Set Digit 2	CCWLIM											0		
Reverse rotation prohibited [P2-09]. Set Digit 3	CWLIM											0		
Emergency stop [P2-09]. Set Digit 4	EMG											0		
Stop [P2-09]. Set Digit 5	STOP	1										0		

NOTE 1) For the purpose of the input signal logic definitions, Contact A is 1 and Contact B is 0.

(4) Example of Changing Input Signal Logic Definitions

Input signal logic definitions can be changed in [P2-08] and [P2-09].

When input signals are allocated as below, settings will be done as shown in table below.

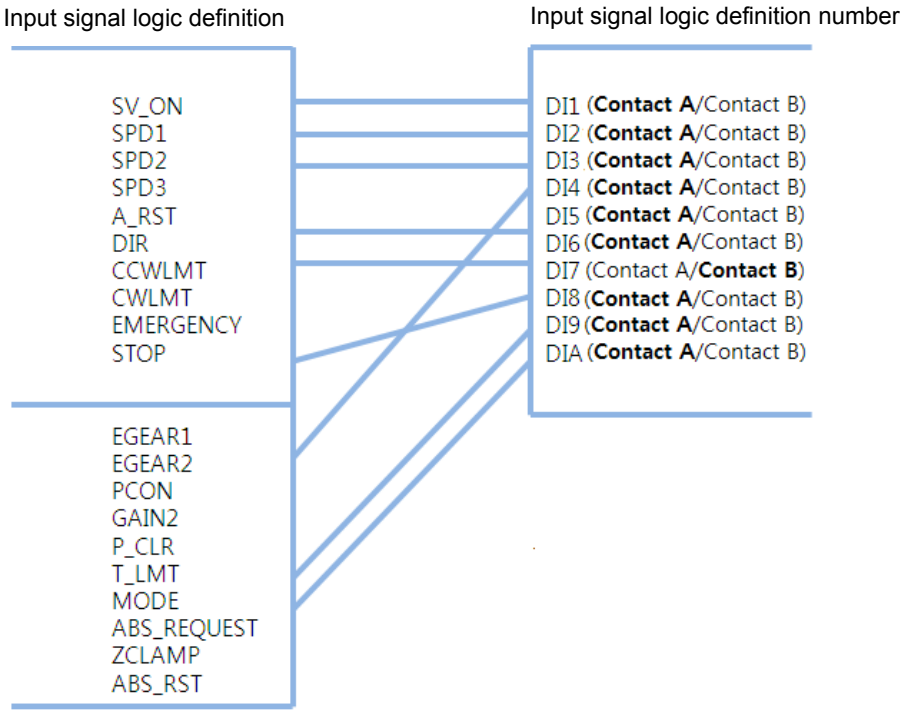

Signal Name / Parameter Allocation	Input Signal	CN1 Pin Default Allocation Number										Contact B	Input signal logic definition	Default setting
		48	18	19	20	46	17	21	22	23	47			
Servo ON [P2-08].Set Digit 1	SVON										1	0	[P2-08]	0x11111
Multi-speed 1 [P2-08]. Set Digit 2	SPD1									1		0		
Multi-speed 2 [P2-08]. Set Digit 3	SPD2								1			0		
Multi-speed 3 [P2-08]. Set Digit 4	SPD3							1				0		
Alarm reset [P2-08]. Set Digit 5	ALMRST						1					0		
Select rotation direction [P2-09]. Set Digit 1	DIR					1						0	[P2-09]	0x11101
Forward rotation prohibited [P2-09]. Set Digit 2	CCWLIM											0		
Reverse rotation prohibited [P2-09]. Set Digit 3	CWLIM			1								0		
Emergency stop [P2-09]. Set Digit 4	EMG		1									0		
Stop [P2-09]. Set Digit 5	STOP	1										0		

NOTE 1) For the purpose of the input signal logic definition, Contact A is 1 and Contact B is 0.

■ Examples of changing input signal logic definitions

The table below shows examples of changing input signal logic definitions.

The sequence of changing logic signal contact A of SVON (CN1-47) to contact B and logic signal contact B of CCWLIM (1-20) to contact A is as follows.

	Before changing	After changing
[P2-08]:	11111	11110
[P2-09]:	10001	10011

Order	Loader Displays	Keys to Use	What to Do
1	P2-08		Press [UP] or [DOWN] at the blinking cursor to move to [P2-08].
2	11111		Press [SET] to enter parameter edit mode. The parameter is displayed as 11111.
3	11110		Press [UP] or [DOWN] at the blinking cursor to change the number to 11110.
4	11110		Hold down [SET] for approximately one second. After two flickers, the number is saved as 11110 for the parameter.
5	P2-08		Hold down [MODE] for approximately one second to return to [P2-08].
6	P2-09		Press [UP] or [DOWN] at the blinking cursor to change the number to [P2-09].
7	10001		Press [SET] to enter parameter edit mode. The parameter is displayed as 10001.
8	10001		Press [/LEFT] or [/RIGHT] at the blinking cursor to move to the desired digit, DIGIT 2.
9	10011		Press [UP] or [DOWN] at the blinking cursor to change the number to 10011.
10	10011		Hold down [SET] for approximately one second. After two flickers, the number is saved as 10011 for the parameter.
11	P2-09		Hold down [MODE] for approximately one second to return to [P2-09].
12	** Modification is not possible with the servo on &. Reset the parameter.		
※	In case of exiting without saving the set value		Hold down [MODE] for approximately one second to return to the parameter.

NOTE 1) "▯" indicates flickering.

4.1.7 External Output Contact Signal Display [St-15]

You can check whether the ON/OFF status of digital input/output signals that access the servo drive are on or off.

(1) External Output Signal Display

The positions of the seven segment LEDs and CN1 connector pins correspond as follows.

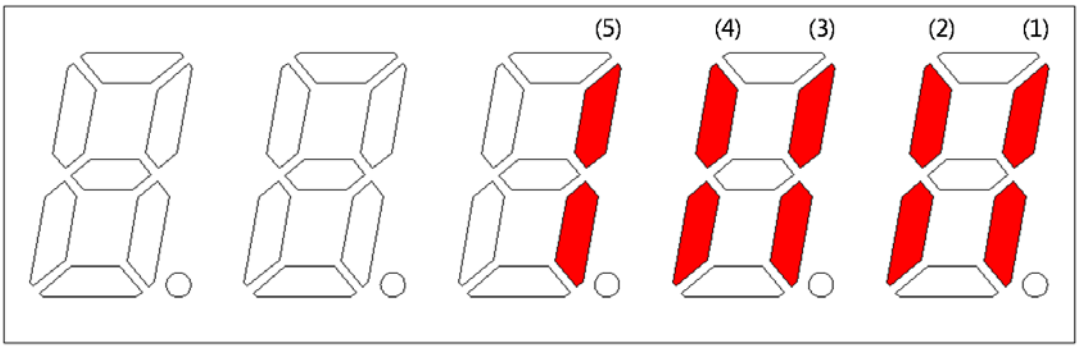

If an LED that corresponds to a pin is turned on/off, it indicates ON/OFF accordingly.

Output Contact Display

Number						(5)	(4)	(3)	(2)	(1)
Contact Number						**DO5**	**DO4**	**DO3**	**DO2**	**DO1**
CN1 pin number						45	44	43	40/41	38/39
Allocated default signal name						INPOS	BRAKE	ZSPD	READY	ALARM

4.1.8 External Output Signal and Logic Definition

The following explains output signal allocation and the method of checking allocation status.

(1) Output Signal Allocation

- Output signal definition: [P2-05], [P2-06], [P2-07]
- Output signal logic definition: [P2-10]
- The default output signal allocation is as follows:

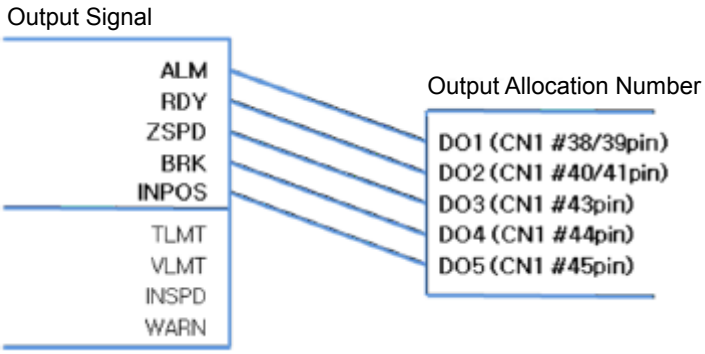

Signal Name / Parameter Allocation	Output Signal	Always Allocated	CN1 Pin Default Allocation Number					Not Allocated	Internal Parameter	Default Value
			45	44	43	40/41	38/39			
Alarm [P2-05].Set Digit 1	ALARM	F	5	4	3	2	1	0	[P2-05]	0x4321
Servo Ready [P2-05]. Set Digit 2	READY	F	5	4	3	2	1	0		
Zero speed achieved [P2-05]. Set Digit 3	ZSPD	F	5	4	3	2	1	0		
Brake [P2-05]. Set Digit 4	BRAKE	F	5	4	3	2	1	0		
Position reached [P2-06]. Set Digit 1	INPOS	F	5	4	3	2	1	0	[P2-06]	0x0005
Torque limit reached [P2-06]. Set Digit 2	TLMT	F	5	4	3	2	1	0		
Speed limit reached [P2-06]. Set Digit 3	VLMT	F	5	4	3	2	1	0		
Speed achieved [P2-06]. Set Digit 4	INSPD	F	5	4	3	2	1	0		
Warning [P2-07]. Set Digit 1	WARN	F	5	4	3	2	1	0	[P2-07]	0x0000

NOTE 1) CN1 connector pin is not allocated when the default value is "0".

(2) Examples of Changing Output Signal Allocation

- The output signal definition can be changed in [P2-05], [P2-06], and [P2-07].
- The output signal logic definition can be changed in [P2-10].
- Allocate output signals as in the following table:

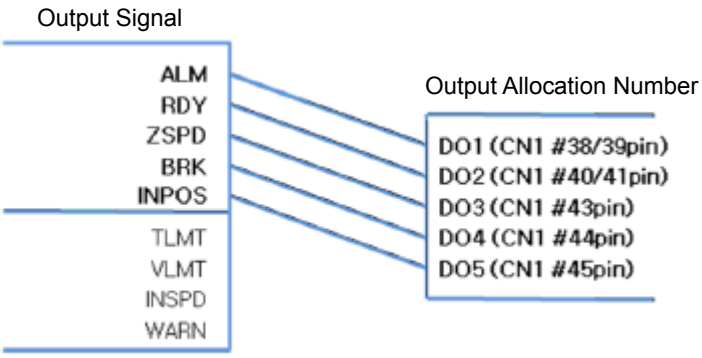

Signal Name / Parameter Allocation	Output Signal	Always Allocated	CN1 Pin Default Allocation Number					Not Allocated	Internal Parameter	Value After Changing
			45	44	43	40/41	38/39			
Alarm [P2-05].Set Digit 1	ALARM	F	5	4	3	2	1	0	[P2-05]	0x0301
Servo Ready [P2-05]. Set Digit 2	READY	F	5	4	3	2	1	0		
Zero speed achieved [P2-05]. Set Digit 3	ZSPD	F	5	4	3	2	1	0		
Brake [P2-05]. Set Digit 4	BRAKE	F	5	4	3	2	1	0		
Position reached [P2-06]. Set Digit 1	INPOS	F	5	4	3	2	1	0	[P2-06]	0x5400
Torque limit reached [P2-06]. Set Digit 2	TLMT	F	5	4	3	2	1	0		
Speed limit reached [P2-06]. Set Digit 3	VLMT	F	5	4	3	2	1	0		
Speed achieved [P2-06]. Set Digit 4	INSPD	F	5	4	3	2	1	0		
Warning [P2-07]. Set Digit 1	WARN	F	5	4	3	2	1	0	[P2-07]	0x0002

NOTE 1) CN1 connector pin is not allocated when the default value is "0".

■ Example of Changing Output Signal Allocation

The following is an example of output signal allocation change.

The sequence of switching the allocation signals of ALARM (CN1-38/39) and ZSPD (CN1-43) is as follows:

Before Changing | After Changing

[P2-05]: 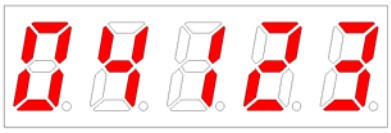

Order	Loader Window Display Result	Keys to Use	What to Do
1			Press [MODE] to move to [P2-05].
2		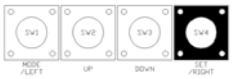	Press [SET] to enter parameter edit mode. The parameter is displayed as 04321.
3			Press [UP] or [DOWN] at the blinking cursor to change the number to 04323.
4		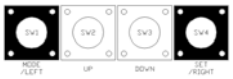	Press [/LEFT] or [/RIGHT] at the blinking cursor to move to the desired digit, DIGIT 3.
5			Press [UP] or [DOWN] at the blinking cursor to change the number to 04123.
6		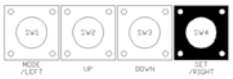	Hold down [SET] for approximately one second. After two flickers, the number will be saved as 04123 for the parameter.
7	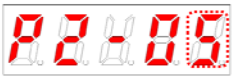		Hold down [MODE] for approximately one second to return to [P2-05].
8	** Modification is not possible with the servo on & Reset the parameter.		
※	In case of exiting without saving the set value		Hold down [MODE] for approximately one second to return to the parameter.

NOTE 1) "▯" indicates flickering.

If two output signals are allocated to a number, the output contact setting error [AL-72] alarm will be triggered.

(3) Output Signal Logic Definition

Output signal logic definition: [P2-10]

The logic of output signals as shipped from the factory is as follows.

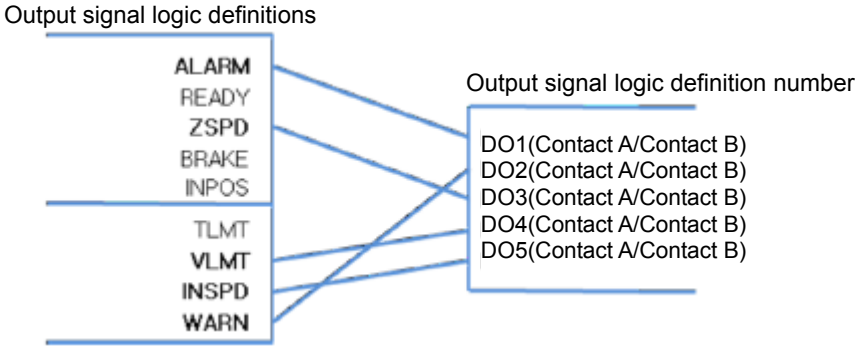

Signal Name / Parameter Allocation	Input Signal (Initial Name)	CN1 Pin Default Allocation Number					Contact B	Output Signal Logic Definition	Default Setting
		45	44	43	40 /41	38 /39			
Alarm [P2-10].Set Digit 1	ALARM						0	[P2-10]	0x10110
Servo Ready [P2-10]. Set Digit 2	READY				1		0		
Zero speed achieved [P2-10].Digit 3	ZSPD			1			0		
Brake [P2-10].Digit 4	BRAKE						0		
Position reached [P2-10].Digit 5	INPOS	1					0		

NOTE 1) For the purpose of the input signal logic definition, Contact A is 1 and Contact B is 0

(4) Examples of Changing Output Signal Logic Definition

- Output signal logic definitions can be changed at [P2-10]
- Set output signals as shown in the table below when they are allocated as below.

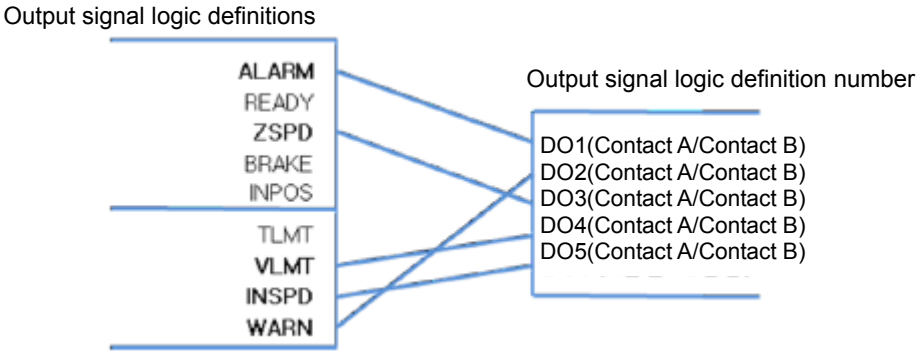

Signal Name / Parameter Allocation	Input Signal (Initial Name)	CN1 Pin Default Allocation Number					Contact B	Output Signal Logic Definition	Default Setting
		45	44	43	40 /41	38 /39			
Alarm [P2-10].Set Digit 1	ALARM						0	[P2-10]	0x11110
Servo Ready [P2-10]. Set Digit 2	READY				1		0		
Zero speed achieved [P2-10].Digit 3	ZSPD			1			0		
Brake [P2-10].Digit 4	BRAKE		1				0		
Position reached [P2-10].Digit 5	INPOS	1					0		

For the purpose of the input signal logic definition, Contact A is 1 and Contact B is 0

■ Example of Changing Output Signal Allocation

The following is an example of output signal allocation change.

The sequence of switching the allocation signals of ALM (CN1-38/39) and ZSPD (CN1-43) is as follows:

Before Changing | After Changing

[P2-05]: 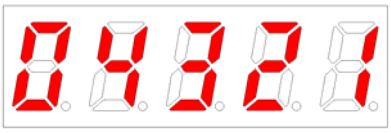 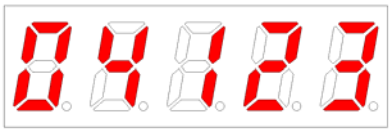

Order	Loader Window Display Result	Keys to Use	What to Do
1			Press [MODE] to move to [P2-05].
2		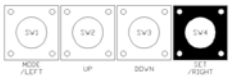	Press [SET] to enter parameter edit mode. The parameter is displayed as 04321.
3			Press [UP] or [DOWN] at the blinking cursor to change the number to 04323.
4		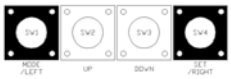	Press [/LEFT] or [/RIGHT] at the blinking cursor to move to the desired digit, DIGIT 3.
5			Press [UP] or [DOWN] at the blinking cursor to change the number to 04123.
6		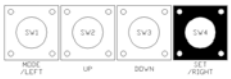	Hold down [SET] for approximately one second. After two flickers, the number will be saved as 04123 for the parameter.
7	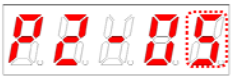		Hold down [MODE] for approximately one second to return to [P2-05].
8	** Modification is not possible with the servo on & Reset the parameter.		
※	In case of exiting without saving the set value	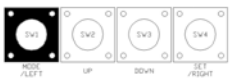	Hold down [MODE] for approximately one second to return to the parameter.

NOTE 1) "▯"indicates flickering.

If two output signals are allocated to a number, the output contact setting error [AL-72] alarm will be triggered.

4.2 Parameter Description

4.2.1 Parameter System

There are a total of eight groups of parameters. Each group is explained in the following table:

Move to Another Parameter	Parameter Number	Initial Screen	Parameter Group Name	Details
MODE Key	-	E.g.) In speed mode	Status Summary Display	Displays the status summary of the servo.
	St-00 - St-26		Status	Displays the operation status of the servo.
	P0-00 - P0-27		System	Saves system configuration information.
	P1-00 - P1-29		Control	Save control-related parameters.
	P2-00 - P2-22		IN / OUT	Saves parameters related to analog and digital input/output.
	P3-00 - P3-20		Speed Operation	Saves speed operation parameters.
	P4-00 - P4-14		Position Operation	Saves position pulse operation parameters.
	Cn-00 - Cn-18		Command	Performs operation handling.

The following explains the acronyms related to application mode in the parameter.

- P: Use in position control mode.
- S: Use in speed control mode.
- T: Use in torque control mode.

Press [MODE] once to move to the next display mode.

4.2.2 Operation Status Display Parameter

For detailed information, refer to "4.3 Operation Status Display."

"**" Modification is not possible with the servo on & Power reset parameter.
"*" Parameter that cannot be modified with the servo on

Parameter		Unit	Initial	Details	Application mode
Code	Name	Minimum	Maximum		
St-00	Current operation status	-	-	Displays the current operation status. DIGIT 5: Operation Mode DIGIT 4: ZSPD, INPOS/INSPD, Command, READY DIGIT 3-1: Run Status (Details: Refer to "4.1.2 Status Summary Display.")	PST
	Operation status	0	0		
St-01	Current operation speed	[RPM]	0	Displays the current operation speed. (Details: Refer to "4.3.2 Speed Display.")	PST
	Current speed	-10000	10000		
St-02	Current command speed	[RPM]	0	Displays the current command speed. (Details: Refer to "4.3.2 Speed Display.")	ST
	Command speed	-10000	10000		
St-03	Follow position pulse	[pulse]	0	Displays the accumulated number of tracked position command pulses. ▪ Displays the accumulated number of position command pulses that followed as a result of the rotation of the servo motor because the servo was turned on. ▪ If a number is lower than the minimum or higher than the maximum, it is displayed as the minimum or maximum. (Details: Refer to "4.3.3 Position Display.")	P
	Feedback pulse	-2^30	2^30		
St-04	Position command pulse	[pulse]	0	Displays the accumulated number of position command pulses. ▪ Displays the accumulated number of position command pulses that have been entered since the servo turned on. (Details: Refer to "4.3.3 Position Display.")	P
	Command pulse	-2^30	2^30		
St-05	Remaining position pulse	[pulse]	0	Displays the remaining position pulses that the servo has to operate. ▪ This is the difference between command pulse and tracking pulse, and displays the remaining position pulses for the servo to operate. ▪ The remaining position pulses, which are displayed when the servo is off, are ignored when the servo turns on. (Details: Refer to "4.3.3 Position Display.")	P
	Pulse error	-2^30	2^30		
St-06	Input pulse frequency	[Kpps]	0.0	Displays input pulse frequency.	P
	Input Pulse frequency	-1000.0	1000.0		
St-07	Current operation torque	[%]	0.0	Displays the current load factor against the rated load factor. Displays the load currently output by the servo motor as a percentage against the rated output.	T
	Current torque	-300.0	300.0		
St-08	Current command torque	[%]	0.0	Displays the command load factor against the rated load factor. ▪ Displays the load currently output by the servo motor as a percentage against the rated output. (Details: Refer to "4.3.4 Torque and Load Display.")	T
	Command torque	-300.0	300.0		

Parameter		Unit	Initial	Details	Application mode
Code	Name	Minimum	Maximum		
St-09	Accumulated overload rate	[%]	0.0	Displays the currently accumulated load factor against the maximum accumulated load factor as a percentage. (Details: Refer to “4.3.4 Torque and Load Display.”)	PST
	Accumulated overload	-300.0	300.0		
St-10	Instantaneous maximum load factor	[%]	0.0	Displays the instantaneous maximum load factor against the rated load factor. ▪ Displays, as a percentage, the maximum overload between the current time and the start of control set off when the servo turned on. (Details: Refer to “4.3.4 Torque and Load Display.”)	PST
	Maximum load	-300.0	300.0		
St-11	Torque limit	[%]	-	Displays the torque limit value. ▪ Displays, as a percentage, the maximum torque that the servo motor can output, against the rated torque. (T_LMT contact ON: Analog torque input. T_LMT contact OFF: [P1-13] and [P1-14] values)	PST
	Torque limit	-300.0	300.0		
St-12	DC link voltage	[V]	0.0	Displays the current DC link voltage of the main power. ▪ The DC link voltage of the standard drive that uses 220 [V] is approximately 300 [V]. ▪ The maximum DC link voltage allowed for the standard drive that uses 220 [V] is 405 [V]. ▪ The overvoltage alarm [AL-41] triggers when the DC link voltage threshold is exceeded because there is either too much or too little regenerative resistance. ▪ The normal DC link voltage in the regenerative section is 385 [V] or below. (Details: Refer to “4.3.4 Torque and Load Display.”)	PST
	DC link voltage	0.0	500.0		
St-13	Regenerative overload	[%]	0.0	Displays the regenerative overload rate.	PST
	Regeneration overload	0.0	20.0		
St-14	Input contact status	-	-	Displays the input contact status that the servo recognizes. (Details: Refer to “4.1.5 External Input Contact Signal Display.”)	PST
	Input Status	-	-		
St-15	Output contact status	-	-	Displays the output contact status that the servo outputs. (Details: Refer to “4.1.6 External Input Contact Signal Display.”)	PST
	Output status	-	-		
St-16	Single-turn data (Single-turn data)	[pulse]	0	Displays the single-turn data of the encoder in pulses.	PST
	Single-turn data	0	2^30		
St-17	Single-turn data (Degrees)	[˚]	0.0	Displays the single-turn data of the encoder in degrees.	PST
	Single-turn data (Degrees)	0.0	360.0		
St-18	Multi-turn data	[rev]	0	Displays the multi-turn data of the encoder.	PST
	Multi-turn data	-32768	32767		

Parameter		Unit	Initial	Details	Application mode
Code	Name	Minimum	Maximum		
St-19	Internal temperature	[℃]	0	Displays the internal temperature sensor value.	PST
	Room temperature	-40	200		
St-20	Rated motor speed	[RPM]	0	Displays the rated speed of the currently installed motor.	PST
	Rated RPM	0	10000		
St-21	Maximum motor speed	[RPM]	0	Displays the maximum speed of the currently installed motor.	PST
	Maximum RPM	0	10000		
St-22	Rated motor current	[A]	0.00	Displays the rated current of the currently installed motor.	PST
	Rated current	0.00	655.35		
St-23	U phase current offset	[mA]	0	Displays the U phase current offset.	PST
	U Phase current offset	-200	200		
St-24	V phase current offset	[mA]	0	Displays the V phase current offset.	PST
	V phase current offset	-200	200		
St-25	Program version	-	-	Displays the version of the currently installed program. (Details: Refer to “4.3.7 Software Version Display.”)	PST
	Software version	-	-		
St-26	FPGA Version	-	-	Displays the version of the currently installed FPGA version.	PST
	FPGA Version	-	-		
St-27	Analog Torque Command	%	0	Displays the values of the current analog torque command	T
	Analog Tq CMD	-3000	3000		

4.2.3 System Setting Parameter

For detailed information, refer to "4.4.1 System Parameter Setting."

"**" Modification is not possible with the servo on & Power reset parameter.
"*" Parameter that cannot be modified with the servo on

Parameter		Unit	Initial	Details	Application mode
Code	Name	Minimum	Maximum		
**P0-00	Motor ID	-	999	▪ Set Motor ID. ▪ If the attempt to read motor data fails, the initial value is set to 999. (Details: Refer to "4.4.1 System Parameter Setting.")	PST
	Motor ID	0	999		
**P0-01	Encoder type	-	0	• 0: Quadrature Type encoder. • 1: Single turn Serial encoder. • 3: Multi turn Serial encoder (Details: Refer to "4.4.1 System Parameter Setting.")	PST
	Encoder type	0	5		
**P0-02	Encoder pulse	[ppr]	3000	▪ Serial Type encoder: Set the number of bits per turn from the encoder. ▪ Quadrature Type encoder: Sets the number of encoder pulses. (Details: Refer to "4.4.1 System Parameter Setting.")	PST
	Enc resolution	1	30000		
*P0-03	Select operation mode	-	1	Sets operation mode. (0: Torque operation. 1: Speed operation. 2: Position operation. 3: Speed/position operation. 4: Torque/speed operation. 5: Torque/position operation.) (Details: Refer to "4.4.1 Speed Operation Parameter Setting.")	PST
	Operation mode	0	5		
**P0-04	RS422 communication speed	[bps]	0	Sets communication speed for RS-422 communication. ▪ 0 : 9600 [bps] ▪ 1 : 19200 [bps] ▪ 2 : 38400 [bps] ▪ 3 : 57600 [bps] (Details: Refer to "4.4.1 System Parameter Setting.")	PST
	RS422 baud rate	0	3		
**P0-05	System ID	-	0	Sets drive ID for communication. ▪ An ID can be given to the servo if USB communication, RS422 communication and BUS communication are used for communication with the servo. ▪ A unique ID can be given to the servo and used for individual communication with it. (Details: Refer to "4.4.1 System Parameter Setting.")	PST
	System ID	0	99		

Parameter		Unit	Initial	Details	Application mode
Code	Name	Minimum	Maximum		
P0-06	Main power input mode	-	0b00000	Sets main power input. DIGIT 1-> 0: Single-phase power 1: 3-phase power input ⚠ **Caution**: Using single-phase power may lower motor output. DIGIT2 -> 0: Alarm in case of phase loss 1: Warning in case of phase loss	PST
	Power fail mode	0b00000	0b11111		
P0-07	RST checking time	[ms]	20	Sets the time to check main power phase loss.	PST
	RST check time	0	5000		
P0-08	Displays parameter upon start.	-	0	Sets the number for the operation status parameter that is displayed at the start. (Details: Refer to “4.4.1 System Parameter Setting.")	PST
	Start up parameter	0	26		
*P0-09	Regenerative overload derating	[%]	100	Sets derating factor for checking of regenerative resistance overload. The overload alarm triggers quickly when the derating value is set to 100% or below.	PST
	Regeneration derating	1	200		
**P0-10	Regenerative resistance value	[Ω]	0	Sets the resistance value for regenerative braking resistance. If set to 0, the default resistance value of the drive is used.	PST
	Regeneration brake resistor	0	1000		
**P0-11	Regenerative resistance capacity	[W]	0	Sets the capacity for the current regenerative resistance. If set to 0, a default resistance capacity embedded in the drive is used.	PST
	Regeneration brake capacity	0	30000		
*P0-12	Overload check Base load factor	[%]	100	Indicates the load factor for starting continuous overload checks. If set to 100 or below, an overload check starts early and the overload alarm triggers early.	PST
	Overload check base	10	100		
P0-13	Continuous overload warning level	[%]	50	Indicates the level of continuous overload warning signal output. Outputs the warning signal when the percentage value against alarm trigger load factor is reached.	PST
	Overload Warning Level	10	100		
*P0-14	Encoder output scaling	-	12000	Sets the encoder output pulses per a rotation, when the servo outputs an encoder output signal to the outside. (Details: Refer to “4.4.1 System Parameter Setting.")	PST
	Pulse out per rotation.	-2^21	2^21		
*P0-15	PWM OFF delay time	[ms]	10	Sets the time to delay until the PWM signal actually goes off after the servo is turned off. (Details: Refer to “4.4.1 System Parameter Setting.")	PST
	PWM OFF delay	0	1000		

Parameter		Unit	Initial	Details	Application mode
Code	Name	Minimum	Maximum		
*P0-16	DB control mode	-	0x0	Sets DB control mode. ▪ 0: Hold after DB stop ▪ 1: Release after DB stop ▪ 2: Release after free run stop ▪ 3: Hold after free run stop (Details: Refer to “4.4.1 System Parameter Setting.")	PST
	DB control mode	0x0	0x3		
*P0-17	Function setting bit	-	0b00000	Sets drive function per digit. DIGIT 1 -> Sets the direction of the servo rotation. • 0: Forward (CCW), Reverse (CW) • 1: Forward (CW), Reverse (CCW) DIGIT 2 -> Sets the lock of the servo motor when the value of analog speed command is 0 in speed operation mode. • 0: Not for use • 1: Use (Torque improvement when analog command stops) DIGIT 3 -> Sets the open collector contacts for encoder pulse output. • 0: Not for use • 1: Use(ALO0-> A Phase, ALO1->B Phase, ALO2-> Z Phase) DIGIT 4 -> Sets the range of monitor output voltage. • 0: -10V~+10V • 1: 0~10V DIGIT 5 -> Sets EEPROM save function in communication. • 0: Enable to save parameter data when writing through communication. • 1: Unable to save parameter data when writing through communication. (Details: Refer to “4.4.1 System Parameter Setting.")	PST
	Function select bit	0b00000	0b11111		
P0-18	DAC output mode	-	0x3210	Sets output mode for 1-2 analog output channels. Sets CH0-CH3 from the bottom, HEX Code, in order. ▪ Output CH0 and CH1 as MONIT1 and MONIT2. • 0 : Speed Feedback [RPM] • 1 : Speed Command [RPM] • 2 : Torque Feedback [%] • 3 : Torque Command [%] • 4 : Position Command Frequency [0.1 Kpps] • 5 : Following Error [pulse] • 6 : DC Link Voltage [V] • D: Speed command (User) [RPM] • E: Torque command (User) [%] (Details: Refer to “4.4.1 System Parameter Setting.")	PST
	DAC mode (F)	0x0000	0xFFFF		

Parameter		Unit	Initial	Details	Application mode
Code	Name	Minimum	Maximum		
P0-19	DAC output offset 1 (MONIT1)	[Unit/V]	0	Sets offset for 1-2 analog output channels. • Speed: [RPM] • Torque: [%] • Position command frequency: [0.1 Kpps] • Position: [pulse] • DC Link: [V] • Offset (Details: Refer to “4.4.1 System Parameter Setting.")	PST
	DAC output offset 1 (MONIT1)	-1000	1000		
P0-20	DAC output offset 2 (MONIT2)	[Unit/V]	0		
	DAC offset 2 (F) (MONIT2)	-1000	1000		
P0-21	Reserved				
P0-22	Reserved				
P0-23	DAC output scale 1 (MONIT1)	[Unit/V]	500	Sets magnification for 1-2 analog output channels. Sets magnification as setting Unit/V. E.g.) Channel 1 scale 100 [RPM]: Output 100 [RPM] as 1 [V]. (Details: Refer to “4.4.1 System Parameter Setting.")	PST
	DAC scale1 (F) (MONIT1)	1	10000		
P0-24	DAC output scale 2 (MONIT2)	[Unit/V]	500		PST
	DAC scale 2 (F) (MONIT2)	1	10000		
P0-24	DAC output scale 2 (MONIT2)	[Unit/V]	500	Sets magnification for 1-2 analog output channels. Sets magnification as setting Unit/V. E.g.) Channel 1 scale 100 [RPM]: Output 100 [RPM] as 1 [V]. (Details: Refer to “4.4.1 System Parameter Setting.")	PST
	DAC scale 2 (F) (MONIT2)	1	10000		
P0-25	Reserved				
P0-26	Encoder function setting	-	0	Multi turn encoder function setting *0: Using as Multi turn mode with multi turn encoder. *1: Using as Single turn mode with multi turn encoder. (Applied from OS Ver 1.29)	PST
		0	1		
P0-27	U phase Current Offset value	[mA]	0	Store U phase Current Offset value.	PST
	U Current Offset	-9999	9999		
P0-28	V phase Current Offset value	[mA]	0	Store V phase Current Offset value.	PST
	V Current Offset	-9999	9999		
P0-29	Reserved				

4.2.4 Control Setting Parameter

For detailed information, refer to "4.4.2 Control Parameter Setting."

"**" Modification is not possible with the servo on & Power reset parameter.
"*" Parameter that cannot be modified with the servo on

Parameter		Unit	Initial	Details	Application mode
Code	Name	Minimum	Maximum		
P1-00	Inertia ratio	[%]	100	Sets inertia ratio for load. ▪ Inertia ratio is considered 100 percent when there is no load from the motor. Because setting inertia ratio against load is an important control parameter for the operation of the servo, inertia ratio shall be set by calculating load inertia by the machine system and rotor inertia from the motor specification table. ▪ Setting an accurate inertia ratio is crucial for optimal servo operation. (Details: Refer to "4.4.2 Control Parameter Setting.")	PST
	Inertia ratio	0	20000		
P1-01	Position proportional gain 1	[Hz]	50	Sets position control proportional gain 1. (Details: Refer to "4.4.2 Control Parameter Setting.")	P
	Position P gain 1	0	500		
P1-02	Position Proportional Gain 2	[Hz]	70	Sets position control proportional gain 2. (Details: Refer to "4.4.2 Control Parameter Setting.")	P
	Position P gain 2	0	500		
P1-03	Position command filter time constant	[ms]	0	Sets filter time constant for internal position command which is reflected by electric gear ratio. (Details: Refer to "4.4.2 Control Parameter Setting.")	P
	Pos. command filter time constant	0	1000		
P1-04	Position feedforward gain	[%]	0	Sets position feedforward control ratio. (Details: Refer to "4.4.2 Control Parameter Setting.")	P
	Pos. feedforward gain	0	100		
P1-05	Position feedforward Filter time constant	[ms]	0	Sets position feedforward control filter time constant. (Details: Refer to "4.4.2 Control Parameter Setting.")	P
	Pos. feedforward time constant	0	1000		
P1-06	Speed proportional gain 1	[rad/s]	400	Sets speed control proportional gain 1. (Details: Refer to "4.4.2 Control Parameter Setting.")	PS
	Speed P gain 1	0	5000		

Parameter		Unit	Initial	Details	Application mode
Code	Name	Minimum	Maximum		
P1-07	Speed proportional gain 2	[rad/s]	700	Sets speed control proportional gain 2. (Details: Refer to “4.4.2 Control Parameter Setting.”)	PS
	Speed P gain 2	0	5000		
P1-08	Speed integral time constant 1	[ms]	50	Sets speed control integral time constant 1. (Details: Refer to “4.4.2 Control Parameter Setting.”)	PS
	Speed time constant 1	1	1000		
P1-09	Speed integral time constant 2	[ms]	15	Sets speed control integral time constant 2.	PS
	Speed time constant 2	1	1000		
P1-10	Speed command filter time constant	[ms]	10	Sets filter time constant for speed command values.	PS
	Speed command filter time constant	0	1000		
P1-11	Speed feedback filter time constant	0.1[ms]	0.5	Sets filter time constant for speed search values. (Details: Refer to “4.4.2 Control Parameter Setting.”)	PS
	Spd. feedback filter time constant	0	100		
P1-12	Torque command filter time constant	[ms]	10	Sets filter time constant for torque command values. (Details: Refer to “4.4.2 Control Parameter Setting.”)	PST
	Trq. command filter time constant	0	1000		
P1-13	Forward rotation torque limit	[%]	300	Sets forward rotation torque limit. (Details: Refer to “4.4.2 Control Parameter Setting.”)	PST
	Positive torque limit	0	300		

Parameter		Unit	Initial	Details	Application mode
Code	Name	Minimum	Maximum		
P1-15	Gain transfer mode	-	0x00	Sets gain transfer mode. [0x0F (DIGIT 1)] ▪ 0: Use only gain 1. ▪ 1: ZSPD automatic gain transfer In case of zero speed, transfer from gain 1 to gain 2. In the opposite case, transfer from gain 2 to gain 1. ▪ 2: INPOS automatic gain transfer In case of IN position, transfer from gain 1 to gain 2. In the opposite case, transfer from gain 2 to gain 1. ▪ 3: Manual gain transfer When the gain 2 contact is on, transfer from gain 1 to gain 2. In the opposite case, transfer from gain 2 to gain 1. Sets P and PI control transfer modes. [0xF0 (DIGIT 2)] 0: Control PI only. ▪ 1: Control P if the command torque is higher than the set torque [P1-24]. ▪ 2: Control P if the command speed is higher than the set speed [P1-25]. ▪ 3: Control P if the current acceleration is higher than the set acceleration [P1-26]. ▪ 4: Control P if the current position error is higher than the set position error [P1-27]. ▪ Control P if the PCON contact is on (highest priority). (Details: Refer to “4.4.2 Control Parameter Setting.”) (Details: Refer to “4.4.4 Input/Output Contact Parameter Setting.”)	PS
	Conversion mode	0x00	0x43		
P1-16	Gain transfer time	[ms]	1	Sets gain transfer time during operation. When converting gain 1 to gain 2 and gain 2 to gain 1, conversion is scheduled according to the set time.	PS
	Gain conversion time	1	100		
P1-17	Resonance avoidance operation	-	0	Select whether to use the notch filter or not. 0: Do not use. 1: Use (Details: Refer to “4.4.2 Control Parameter Setting.”)	PST
	Notch filter use	0	1		
P1-18	Resonance avoidance frequency	[Hz]	300	Sets resonance avoidance frequency. (Details: Refer to “4.4.2 Control Parameter Setting.”)	PST
	Notch frequency	0	1000		
P1-19	Resonance avoidance range	[Hz]	100	Sets the scope of resonance avoidance frequency. (Details: Refer to “4.4.2 Control Parameter Setting.”)	PST
	Notch bandwidth	0	1000		
P1-20	Auto gain tuning speed	100 [RPM]	8	Sets speed for automatic gain tuning run.	PST
	Auto gain tuning Speed	1	10		
P1-21	Auto gain tuning distance	-	3	Sets round-trip distance for automatic gain tuning run.	PST
	Auto gain tuning distance	1	5		

Parameter		Unit	Initial	Details	Application mode
Code	Name	Minimum	Maximum		
P1-22	Torque control speed limiting mode	-	0	Sets speed limit mode during torque control. 0: Limit to [P1-23]. 1: Maximum motor speed 2: Analog speed command 3: Limited to the smaller value between the value of [P1-23] and the analog speed command.	T
	Velocity limit switch (torque control)	0	3		
P1-23	Speed limit	[RPM]	2000	Sets speed limit when speed limit mode [P1-22] is 0 during torque control.	T
	Velocity limit value (torque control)	0	10000		
P1-24	P control conversion torque	%	200	When setting P and PI control transfer mode [P1-15], sets [0x10 (DIGIT 2)] P control conversion torque.	PS
	Torque switch value (P control conversion)	0	300		
P1-25	P control conversion speed	rpm	50	When setting P and PI control transfer mode [P1-15], sets [0x20 (DIGIT 2)] P control conversion speed.	PS
	Speed switch value (P control conversion)	0	6000		
P1-26	P control conversion acceleration	rpm/s	1000	When setting P and PI control transfer mode [P1-15], sets [0x30 (DIGIT 2)] P control conversion acceleration.	PS
	Acc. switch value (P control conversion)	0	5000		
P1-27	P control conversion position error	pulse	2000	When setting P and PI control transfer mode [P1-15], sets [0x40 (DIGIT 2)] P control conversion position error .	PS
	Position Err switch value (P control conversion)	0	10000		

4.2.5 Input/Output Setting Parameter

For detailed information, refer to "4.4.3 Analog Input/Output Parameter Setting" and "4.4.4 Input/Output Contact Parameter Setting."

"**" Modification is not possible with the servo on & Power reset parameter.
"*" Parameter that cannot be modified with the servo on

Parameter		Unit	Initial	Details	Application mode
Code	Name	Minimum	Maximum		
**P2-00	Input signal definition 1	-	0x4321	Allocates a CN1 connector pin for a digital input signal. ▪ Initial input signal allocation • [P2-00]DIGIT 1 = SVON (DI1) • [P2-00]DIGIT 2 = SPD1 (DI2) • [P2-00]DIGIT 3 = SPD2 (DI3) • [P2-00]DIGIT 4 = SPD3 (DI4) • [P2-01]DIGIT 1 = ALARMST (DI5) • [P2-01]DIGIT 2 = DIR (DI6) • [P2-01]DIGIT 3 = CCWLIM (DI7) • [P2-01]DIGIT 4 = CWLIM (DI8) • [P2-02]DIGIT 1 = EMG (DI9) • [P2-02]DIGIT 2 = STOP (DIA) • [P2-02]DIGIT 3 = EGEAR1 (**) • [P2-02]DIGIT 4 = EGEAR2 (**) • [P2-03]DIGIT 1 = PCON (**) • [P2-03]DIGIT 2 = GAIN2 (**) • [P2-03]DIGIT 3 = P_CLR (**) • [P2-03]DIGIT 4 = T_LMT (**) • [P2-04]DIGIT 1 = MODE (**) • [P2-04]DIGIT 2 = ABS_RQ (**) • [P2-04]DIGIT 3 = ZCLAMP (**) • [P2-04]DIGIT 4 = ABS_RST (**) (**) Unallocated signals (Details: Refer to "4.1.6 External Input Signal and Logic Definition.")	PST
	Input port define 1	0	0xFFFF		
**P2-01	Input signal definition 2	-	0x8765		
	Input Port define 2	0	0xFFFF		
**P2-02	Input signal definition 3	-	0x00A9		
	Input Port define 3	0	0xFFFF		
**P2-03	Input signal definition 4	-	0x0000		
	Input Port define 4	0	0xFFFF		
**P2-04	Input signal definition 5	-	0x0F00		
	Input Port define 5	0	0xFFFF		
**P2-05	Output signal definition 1	-	0x4321	Allocate a CN1 connector pin for a digital output signal. ▪ Initial output signal allocation • [P2-05]DIGIT 1 = ALARM (DO1) • [P2-05]DIGIT 2 = READY (DO2) • [P2-05]DIGIT 3 = ZSPD (DO3) • [P2-05]DIGIT 4 = BREAK (DO4) • [P2-06]DIGIT 1 = INPOS (DO5) • [P2-06]DIGIT 2 = TLMT (**) • [P2-06]DIGIT 3 = VMLT (**) • [P2-06]DIGIT 4 = INSPD (**) • [P2-07]DIGIT 1 = WARN (**) (**) Unallocated signals (Details: Refer to "4.1.8 External Output Signal and Logic Definition.") In case of dual allocation, the output contact setting error [AL-72] occurs.	PST
	Output port define 1	0	0xFFFF		
**P2-06	Output signal definition 2	-	0x0005		
	Output port define 2	0	0xFFFF		
**P2-07	Output signal definition 3	-	0x0000		
	Output port define 3	0	0xFFFF		
**P2-08	Input signal logic definition 1	-	0b11111	Define CN1 connector logic for a digital input signal. (0: Contact B. 1: Contact A) Initial input logic definitions • [P2-08]DIGIT 1 = DI1 (CN1 #47) (Contact A) • [P2-08]DIGIT 2 = DI2 (CN1 #23) (Contact A) • [P2-08]DIGIT 3 = DI3 (CN1 #22) (Contact A) • [P2-08]DIGIT 4 = DI4 (CN1 #21) (Contact A) • [P2-08]DIGIT 5 = DI5 (CN1 #17) (Contact A) (Details: Refer to "4.1.6 External Input Signal and Logic Definition.")	PST
	Input logic set 1	0	0b11111		

Parameter		Unit	Initial	Details	Application mode
Code	Name	Minimum	Maximum		
**P2-09	Input signal logic definition 2	-	0b10001	Define CN1 connector logic for a digital input signal.(0: Contact B, 1: Contact A) Initial input logic definitions • [P2-09]DIGIT 1 = DI6 (CN1 #46) (Contact A) • [P2-09]DIGIT 2 = DI7 (CN1 #20) (Contact A) • [P2-09]DIGIT 3 = DI8 (CN1 #19) (Contact A) • [P2-09]DIGIT 4 = DI9 (CN1 #18) (Contact A) • [P2-09]DIGIT 5 = DIA (CN1 #48) (Contact A) (Details: Refer to “4.1.6 External Input Signal and Logic Definition.”)	PST
	Input logic set 2	0	0b11111		
**P2-10	Output signal logic definition	-	0b10110	Define CN1 connector logic for a digital output signal (0: Contact B, 1: Contact A) Initial input logic definitions • [P2-10]DIGIT 1 = DO1 (CN #38/39) (Contact B) • [P2-10]DIGIT 2 = DO2 (CN #40/41) (Contact A) • [P2-10]DIGIT 3 = DO3 (CN #43) (Contact A) • [P2-10]DIGIT 4 = DO4 (CN #44) (Contact B) • [P2-10]DIGIT 5 = DO5 (CN #45) (Contact A) (Details: Refer to “4.1.8 External Output Signal and Logic Definition.”) (Details: Refer to “4.4.4 Input/Output Contact Parameter Setting.”)	PST
	Output logic set	0	0b11111		
P2-11	Position reached output range	[pulse]	10	Sets remaining pulse range for position reached output in position operation mode. (Details: Refer to “4.4.4 Input/Output Contact Parameter Setting.”)	P
	In position range	1	65535		
P2-12	Zero speed output range	[RPM]	10	Sets speed range for zero speed output during a stop. (Details: Refer to “4.4.4 Input/Output Contact Parameter Setting.”)	PST
	Zero speed range	1	500		
P2-13	Range of output for speed reached	[RPM]	10	Sets speed range for command speed reached output. (Details: Refer to “4.4.4 Input/Output Contact Parameter Setting.”)	S
	In speed range	1	500		
P2-14	Brake output action speed	[RPM]	100	Sets speed for turning on the brake output contact. (Details: Refer to “4.4.4 Input/Output Contact Parameter Setting.”)	PST
	Brake output speed	0	6000		
P2-15	Brake output delay time	[ms]	500	Sets how much time to delay until the brake output contact turns on when the servo is off or stops. (Details: Refer to “4.4.4 Input/Output Contact Parameter Setting.”)	PST
	Brake output delay time	0	1000		
P2-16	Position pulse clear mode	-	1	Select operation type for position pulse clear (PCLR) mode. • 0: Operate in edge mode. • 1: Operate in level mode.(Torque : Continue) • 2: Operate in level mode.(Torque : 0) (Details: Refer to “4.4.4 Input/Output Contact Parameter Setting.”)	P
	PCLR mode	0	1		
*P2-17	Analog speed scale	[RPM]	2000	Sets speed scale when the analog speed command is 10 [V]. (Details: Refer to “4.4.3 Analog Input/Output Parameter Setting.”)	S
	Analog speed command scale	1	15000		

Parameter		Unit	Initial	Details	Application mode
Code	Name	Minimum	Maximum		
P2-18	Analog speed offset	[mV]	0	Sets offset for analog speed commands. (Details: Refer to “4.4.3 Analog Input/Output Parameter Setting.”)	S
	Analog speed command offset	-1000	1000		
P2-19	Zero speed clamp voltage	[mV]	0	Sets voltage range for the clamp operation of the analog zero speed command.	S
	Zero speed clamp voltage	0	1000		
*P2-20	Analog torque scale	[%]	100	Sets torque scale when the analog torque command is 10 [V]. (Details: Refer to “4.4.3 Analog Input/Output Parameter Setting.”)	T
	Analog torque scale	1	350		
P2-21	Analog torque command offset	[mV]	0	Sets offset for analog torque commands. (Details: Refer to “4.4.3 Analog Input/Output Parameter Setting.”)	T
	Analog torque command offset	-1000	1000		
P2-22	Zero torque clamp voltage	[mV]	0	Sets voltage range for the clamp operation of the analog zero torque command.	T
	Zero torque clamp voltage	0	1000		

4.2.6 Speed Operation Setting Parameter

For detailed information, refer to "4.4.5 Speed Operation Parameter Setting."

"**" Modification is not possible with the servo on & Power reset parameter.

<table>
<tr><th colspan="2">Parameter</th><th>Unit</th><th>Initial</th><th rowspan="2">Details</th></tr>
<tr><th>Code</th><th>Name</th><th>Minimum</th><th>Maximum</th></tr>
<tr><td rowspan="2">P3-00</td><td>Speed command 1</td><td>[RPM]</td><td>10</td><td rowspan="13">Sets 1-6 speed commands based on the speed command input contact.
<table>
<tr><th>SPD1</th><th>SPD2</th><th>SPD3</th><th>Speed Control</th></tr>
<tr><td>OFF</td><td>OFF</td><td>OFF</td><td>Analog speed command</td></tr>
<tr><td>ON</td><td>OFF</td><td>OFF</td><td>Digital speed command 1</td></tr>
<tr><td>OFF</td><td>ON</td><td>OFF</td><td>Digital speed command 2</td></tr>
<tr><td>ON</td><td>ON</td><td>OFF</td><td>Digital speed command 3</td></tr>
<tr><td>OFF</td><td>OFF</td><td>ON</td><td>Digital speed command 4</td></tr>
<tr><td>ON</td><td>OFF</td><td>ON</td><td>Digital speed command 5</td></tr>
<tr><td>OFF</td><td>ON</td><td>ON</td><td>Digital speed command 6</td></tr>
<tr><td>ON</td><td>ON</td><td>ON</td><td>Digital speed command 7</td></tr>
</table>
(Details: Refer to "4.4.5 Speed Operation Parameter Setting.")</td></tr>
<tr><td>Speed command 1</td><td>-6000</td><td>6000</td></tr>
<tr><td rowspan="2">P3-01</td><td>Speed command 2</td><td>[RPM]</td><td>100</td></tr>
<tr><td>Speed command 2</td><td>-6000</td><td>6000</td></tr>
<tr><td rowspan="2">P3-02</td><td>Speed command 3</td><td>[RPM]</td><td>500</td></tr>
<tr><td>Speed command 3</td><td>-6000</td><td>6000</td></tr>
<tr><td rowspan="2">P3-03</td><td>Speed command 4</td><td>[RPM]</td><td>1000</td></tr>
<tr><td>Speed command 4</td><td>-6000</td><td>6000</td></tr>
<tr><td rowspan="2">P3-04</td><td>Speed command 5</td><td>[RPM]</td><td>1500</td></tr>
<tr><td>Speed command 5</td><td>-6000</td><td>6000</td></tr>
<tr><td rowspan="2">P3-05</td><td>Speed command 6</td><td>[RPM]</td><td>2000</td></tr>
<tr><td>Speed command 6</td><td>-6000</td><td>6000</td></tr>
<tr><td rowspan="2">P3-06</td><td>Speed command 7</td><td>[RPM]</td><td>3000</td></tr>
<tr><td>Speed command 7</td><td>-6000</td><td>6000</td></tr>
<tr><td rowspan="2">P3-07</td><td>Z detection operation speed</td><td>[RPM]</td><td>10</td><td rowspan="2">Sets Z detection operation speed.</td></tr>
<tr><td>Z search operation speed</td><td>1</td><td>300</td></tr>
<tr><td rowspan="2">P3-08</td><td>Speed command acceleration time</td><td>[ms]</td><td>0</td><td rowspan="2">Sets acceleration time for speed commands.
(Details: Refer to "4.4.5 Speed Operation Parameter Setting.")</td></tr>
<tr><td>Speed command ACC. time</td><td>0</td><td>10000</td></tr>
<tr><td rowspan="2">P3-09</td><td>Speed command deceleration time</td><td>[ms]</td><td>0</td><td rowspan="2">Sets deceleration time for speed commands.
(Details: Refer to "4.4.5 Speed Operation Parameter Setting.")</td></tr>
<tr><td>Speed command DEC. time</td><td>0</td><td>10000</td></tr>
<tr><td rowspan="2">P3-10</td><td>Speed command S-curve time</td><td>[ms]</td><td>10</td><td rowspan="2">Sets S-Curve time for speed commands.</td></tr>
<tr><td>Speed command S-curve time</td><td>1</td><td>100</td></tr>
<tr><td rowspan="2">*P3-11</td><td>Speed operation pattern</td><td>-</td><td>0</td><td rowspan="2">Sets acceleration/deceleration type for speed commands.
(0;Trapezoidal, 1;Sinusoidal)
(Details: Refer to "4.4.5 Speed Operation Parameter Setting.")</td></tr>
<tr><td>ACC.DEC. pattern</td><td>0</td><td>1</td></tr>
<tr><td rowspan="2">P3-12</td><td>Manual JOG operation speed</td><td>[RPM]</td><td>500</td><td rowspan="2">Sets operation speed for manual JOG operation [Cn-00].</td></tr>
<tr><td>JOG operation speed</td><td>-6000</td><td>6000</td></tr>
</table>

Parameter		Unit	Initial	Details
Code	Name	Minimum	Maximum	
P3-13	Program JOG operation speed 1	[RPM]	0	Sets operation speed/operation time for programs 1 to 4 during program JOG operation [Cn-01]. A test run repeats from step 1 to step 4. Sets operation speed ([P3-13]-[P3-16]) and operation time ([P3-17]-[P3-20]) for each step. E.g.) Step 1 operation 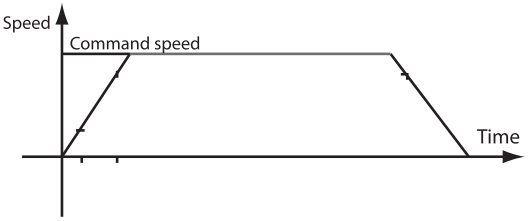
	Program jog speed 1	-6000	6000	
P3-14	Program JOG operation speed 2	[RPM]	3000	
	Program jog speed 2	-6000	6000	
P3-15	Program JOG operation speed 3	[RPM]	0	
	Program jog speed 3	-6000	6000	
P3-16	Program JOG operation speed 4	[RPM]	-3000	
	Program jog speed 4	-6000	6000	
P3-17	Program JOG operation time 1	[ms]	500	
	Program jog time 1	0	65535	
P3-18	Program JOG operation time 2	[ms]	5000	
	Program jog time 2	0	65535	
P3-19	Program JOG operation time 3	[ms]	500	
	Program jog time 3	0	65535	
P3-20	Program JOG operation time 4	[ms]	5000	
	Program jog time 4	0	65535	

4.2.7 Position Operation Setting Parameter

For detailed information, refer to "4.4.6 Position Operation Parameter Setting."

"**" Modification is not possible with the servo on & Power reset parameter.
"*" Parameter that cannot be modified with the servo on

Parameter		Unit	Initial	Details
Code	Name	Minimum	Maximum	
**P4-00	Position input pulse logic	-	0	Sets logic for position operation input pulses. - The type of position command input pulses and rotation direction per logic are as follows: 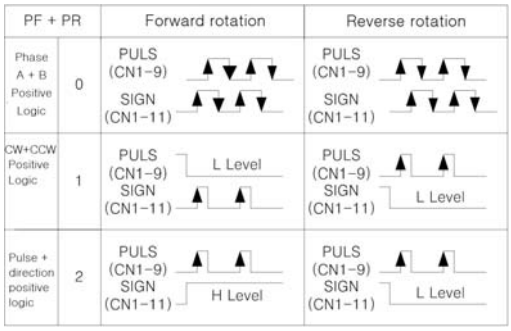 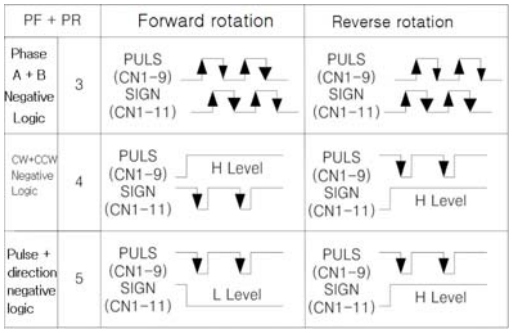 E.g.) Relation between direction signals and rotation directions when the position pulse input logic is set to 2. When the direction signal is low: Reverse rotation (CW/clockwise) When the direction signal is high: Forward rotation (CCW/counterclockwise) (Details: Refer to "4.4.6 Position Operation Parameter Setting.")
	Pulse Input Logic	0	5	

<table>
<tr><th colspan="2">Parameter</th><th>Unit</th><th>Initial</th><th rowspan="2">Details</th></tr>
<tr><th>Code</th><th>Name</th><th>Minimum</th><th>Maximum</th></tr>
<tr><td rowspan="2">*P4-01</td><td>Electronic gear ratio numerator 1</td><td>-</td><td>1000</td><td rowspan="12">Sets electronic gear ratio numerator/denominator 1, 2, 3, and 4.
<table>
<tr><th>EGEAR 1</th><th>EGEAR 2</th><th>Electronic Gear Ratio Numerator / Denominator</th><th>Electronic Gear Ratio</th></tr>
<tr><td rowspan="2">OFF</td><td rowspan="2">OFF</td><td>Electronic gear ratio numerator 1</td><td rowspan="2">Electronic gear ratio 1</td></tr>
<tr><td>Electronic gear ratio denominator 1</td></tr>
<tr><td rowspan="2">ON</td><td rowspan="2">OFF</td><td>Electronic gear ratio numerator 2</td><td rowspan="2">Electronic gear ratio 2</td></tr>
<tr><td>Electronic gear ratio denominator 2</td></tr>
<tr><td rowspan="2">OFF</td><td rowspan="2">ON</td><td>Electronic gear ratio numerator 3</td><td rowspan="2">Electronic gear ratio 3</td></tr>
<tr><td>Electronic gear ratio denominator 3</td></tr>
<tr><td rowspan="2">ON</td><td rowspan="2">ON</td><td>Electronic gear ratio numerator 4</td><td rowspan="2">Electronic gear ratio 4</td></tr>
<tr><td>Electronic gear ratio denominator 4</td></tr>
</table>
▪ The electronic gear ratio is the numerator/denominator form of the relation between the position command input pulse and the motor encoder pulse. It is important to set the ratio so that there is no error during position operation.
(Details: Refer to “4.4.6 Position Operation Parameter Setting.”)</td></tr>
<tr><td>Electric gear num.1</td><td>1</td><td>2^21</td></tr>
<tr><td rowspan="2">*P4-02</td><td>Electronic gear ratio numerator 2</td><td>-</td><td>1000</td></tr>
<tr><td>Electric gear num.2</td><td>1</td><td>2^21</td></tr>
<tr><td rowspan="2">*P4-03</td><td>Electronic gear ratio numerator 3</td><td>-</td><td>1000</td></tr>
<tr><td>Electric gear num.3</td><td>1</td><td>2^21</td></tr>
<tr><td rowspan="2">*P4-04</td><td>Electronic gear ratio numerator 4</td><td>-</td><td>1000</td></tr>
<tr><td>Electric gear num.4</td><td>1</td><td>2^21</td></tr>
<tr><td rowspan="2">*P4-05</td><td>Electronic gear ratio denominator 1</td><td>-</td><td>1000</td></tr>
<tr><td>Electric gear den.1</td><td>1</td><td>32767</td></tr>
<tr><td rowspan="2">*P4-06</td><td>Electronic gear ratio denominator 2</td><td>-</td><td>2000</td></tr>
<tr><td>Electric gear den.2</td><td>1</td><td>32767</td></tr>
<tr><td rowspan="2">*P4-07</td><td>Electronic gear ratio denominator 3</td><td></td><td>3000</td></tr>
<tr><td>Electric gear den.3</td><td>1</td><td>32767</td></tr>
<tr><td rowspan="2">*P4-08</td><td>Electronic gear ratio denominator 4</td><td>-</td><td>4000</td></tr>
<tr><td>Electric gear den.4</td><td>1</td><td>32767</td></tr>
<tr><td rowspan="2">P4-09</td><td>Electronic gear ratio mode</td><td>-</td><td>0</td><td rowspan="2">Select an electronic gear ratio mode.
▪ 0: Select electronic gear ratio 1-4.
▪ 1: Override offset [P4-10] on the electronic gear ratio numerator 1.
(Details: Refer to “4.4.6 Position Operation Parameter Setting.”)</td></tr>
<tr><td>Electric gear mode</td><td>0</td><td>1</td></tr>
<tr><td rowspan="2">P4-10</td><td>Electric gear ratio numerator offset</td><td>-</td><td>0</td><td rowspan="2">Sets the offset of the electronic gear ratio numerator 1.
The offset will be set on the electronic gear ratio numerator 1.
▪ EGEAR1 contact LOW -> HIGH
: Increase as the [P4-10] setting value .
▪ EGEAR2 contact LOW -> HIGH
: Decrease as the [P4-10] setting value .
(Details: Refer to “4.4.6 Position Operation Parameter Setting.”)</td></tr>
<tr><td>Electric gear num. offset</td><td>-32767</td><td>32767</td></tr>
<tr><td rowspan="2">P4-11</td><td>Position error</td><td>[Pulse]</td><td>90000</td><td rowspan="2">Sets range for triggering the position error alarm.
(Details: Refer to “4.4.4 Input/Output Contact Parameter Setting.”)</td></tr>
<tr><td>Following error range</td><td>1</td><td>2^30</td></tr>
<tr><td rowspan="2">P4-12</td><td>Limit contact function</td><td>-</td><td>0</td><td rowspan="2">Select the operation type of position command pulse clear for CWLIM and CCWLIM contacts.
▪ 0: Ignore any input pulses when the CCWLIM / CWLIM contact is on.
▪ 1: When the CCWLIM / CWLIM contact is on, receive an input pulses and save them to buffer.</td></tr>
<tr><td>Position limit function</td><td>0</td><td>1</td></tr>
</table>

Parameter		Unit	Initial	Details
Code	Name	Minimum	Maximum	
P4-13	Backlash compensation	-	0	Sets backlash compensation in position operation. Sets backlash compensation by converting the amount of backlashes to number of pulses if the position changes because of backlashes caused by position operation. Sets in the opposite direction according to the amount of backlashes. (Details: Refer to “4.4.6 Position Operation Parameter Setting.”)
	Backlash compensation	0	10000	
**P4-14	Pulse input filter	-	3	Sets filter frequency according to pulse input. ▪ 0 : No filter used ▪ 1 : 500 Khz (Min) ▪ 2 : 750 Khz ▪ 3 : 1 Mhz (Default) ▪ 4 : 1.25 Mhz The frequency bands above were determined based on the width of input pulse in consideration of the characteristics of digital filters.
	Pulse input filter	0	5	

4.2.8 Operation Handling Parameter

"**" Modification is not possible with the servo on & Power reset parameter.
"*" Parameter that cannot be modified with the servo on

Parameter		Unit	Initial	Details
Code	Name	Minimum	Maximum	
Cn-00	Manual JOG operation	-	-	The drive performs manual JOG operation by itself. (Refer to "Chapter 5 Handling and Operation.") ▪ [MODE]: Finish ▪ [UP]: Forward rotation (CCW) ▪ [DOWN]: Reverse rotation (CW) ▪ [SET]: Servo ON / OFF Related parameters are as follows: ▪ [P3-08]: Speed command acceleration time ▪ [P3-09]: Speed command deceleration time ▪ [P3-10]: Speed command S-curve ▪ [P3-11]: Speed operation pattern ▪ [P3-12]: JOG operation speed Operate regardless of the contact input status of CN1. (Details: Refer to "4.4.5 Speed Operation Parameter Setting.") (Details: Refer to "5.2 Handling.")
	Jog	-	-	
Cn-01	Program JOG operation	-	-	Continuously operates according to the program already set. ▪ [SET]: Program JOG run or stop Related parameters are as follows: ▪ [P3-08]: Speed command acceleration time ▪ [P3-09]: Speed command deceleration time ▪ [P3-10]: Speed command S-curve ▪ [P3-11]: Speed operation pattern ▪ [P3-13~16]: Program operation speed 1 to 4 ▪ [P3-17~20]: Program operation time 1 to 4 Operate regardless of the contact input status of CN1. (Details: Refer to "4.4.5 Speed Operation Parameter Setting.") (Details: Refer to "5.2 Handling.")
	Program jog	-	-	
Cn-02	Alarm reset	-	-	Reset the alarm that went off. (Details: Refer to "5.2 Handling.")
	Alarm reset	-	-	

Parameter		Unit	Initial	Details
Code	Name	Minimum	Maximum	
Cn-03	Get alarm history	-	-	Check the saved alarm code history. [UP] or [DOWN]: Reads alarm codes. ▪ E.g.) Recent first history [AL-42]: RST_PFAIL occurs. • 01: Latest alarm • 20: 20th previous alarm (Details: Refer to "5.2 Handling.")
	Get alarm history	-	-	
Cn-04	Alarm history clear	-	-	Deletes the entire saved alarm code history. (Details: Refer to "5.2 Handling.")
	Alarm history clear	-	-	
Cn-05	Auto gain tuning	-	-	Performs automatic gain tuning operation. Related parameters are as follows. ▪ [P1-22]: Auto gain tuning speed ▪ [P1-23]: Auto gain tuning distance (Details: Refer to "5.2 Handling.")
	Auto gain tuning	-	-	
Cn-06	Z search	-	-	Perform Z detection. ▪ [SET]: Mode entering and servo ON status ▪ [UP]: Phase Z forward search ▪ [DOWN]: Phase Z reverse search Related parameters are as follows. ▪ [P3-07]: Sets Z-phase search operation speed [RPM]. (Details: Refer to "5.2 Handling.")
	Z detection	-	-	
Cn-07	Input contact forced ON/OFF	-	-	Forcibly turns on/off the input contact temporarily. ▪ [UP]: (A),(8),(6),(4), and (2) signals forced ON/OFF ▪ [DOWN]: (9),(7),(5),(3), and (1) signals forced ON/OFF ▪ [MODE]: Move to another digit. (Details: Refer to "5.2 Handling.")
	Forced input test	-	-	
Cn-08	Output contact forced ON / OFF	-	-	Forcibly turns on/off the output contact temporarily. ▪ [UP]: (4) and (2) signals forced ON/OFF ▪ [DOWN]: (5),(3), and (1) signals forced ON/OFF ▪ [MODE]: Move to another digit. (Details: Refer to "5.2 Handling.")
	Forced output test	-	-	
Cn-09	Parameter initialization	-	-	Initializes parameter data. (Details: Refer to "5.2 Handling.")
	Parameter Initialization	-	-	

Parameter		Unit	Initial	Details
Code	Name	Minimum	Maximum	
Cn-10	Auto speed command offset correction	-	-	Calibrates the offset of analog speed commands automatically. The possible voltage range is from -1 V to 1 V. If offset voltage exceeds this range, [oVrnG] is displayed and there is no calibration. You can check the calibrated offset in the analog speed command offset [P2-18]. (Details: Refer to "5.2 Handling.")
	Auto speed command offset calibration	-	-	
Cn-11	Auto torque command offset correction	-	-	Calibrates the offset of analog torque commands automatically. The possible voltage range is from -1 V to 1 V. If offset voltage exceeds this range, [oVrnG] is displayed and there is no calibration. You can check the calibrated offset in the analog torque command offset [P2-21]. (Details: Refer to "5.2 Handling.")
	Auto torque command offset calibration	-	-	
Cn-12	Manual speed command offset correction	-	-	Calibrates the offset of analog speed commands manually. The possible voltage range is from -1 V to 1 V. If offset voltage exceeds this range, [oVrnG] is displayed and there is no calibration. You can check the calibrated offset in the analog speed command offset [P2-18]. (Details: Refer to "5.2 Handling.")
	Manual speed command offset calibration	-	-	
Cn-13	Manual torque command offset correction	-	-	Calibrate the offset of analog torque commands manually. The possible voltage range is from +1 V to -1 V. If offset voltage exceeds this range, [oVrnG] is displayed and there is no calibration. You can check the calibrated offset in the analog torque command offset [P2-21]. (Details: Refer to "5.2 Handling.")
	Manual torque command offset calibration	-	-	

Parameter		Unit	Initial	Details
Code	Name	Minimum	Maximum	
Cn-14	Absolute encoder reset	-	-	Resets the absolute encoder. (Details: Refer to "5.2 Handling.")
	Abs encoder reset	-	-	
Cn-15	Max load clear	-	-	Reset the instantaneous maximum load factor to 0. ▪ [UP]: Displays the + forward maximum load factor. ▪ [DOWN]: Displays the - direction maximum load factor. ▪ [SET]: Initializes the maximum load factor. (Details: Refer to "5.2 Handling.")
	Max load clear	-	-	
Cn-16	Parameter lock	-	-	Lock or Unlock whole parameter. [UP] : Unlock [DOWN] : Lock (Details: Refer to “5.2 Handling.”)
	Parameter lock	-	-	
Cn-17	Current offset	-	-	Store existing current offset value into [P0-27] ~[P0-28] Parameter. (Details: Refer to “5.2 Handling.”)
	Calculate current offset	-	-	

4.3 Operation Status Display

4.3.1 Status Display [St-00]

Refer to "4.1.2 Status Summary Display."

4.3.2 Speed Display

1. Current operation speed [St-01]

   Displays the current operation speed in [RPM].

2. Current command speed [St-02]

   Displays the current command speed in [RPM].

4.3.3 Position Display

1. Tracking position pulse [St-03]

   Displays the accumulated number of position command pulses that followed as a result of rotation of the servo motor since the servo was turned on.

2. Position command pulse [St-04]

   Displays the accumulated number of position command pulses that have been entered since the servo turned on.

3. Remaining position pulse [St-05]

   - This is the difference between command pulse and tracking pulse, and displays the remaining position pulses for the servo to operate.
   - The remaining position pulses delayed while the servo is off are ignored when it is turned on.

4. Input pulse frequency [St-06]

   Displays input pulse frequency.

4.3.4 Torque and Load Display

1. Current operation torque [St-07]

   Displays the energy (load) output by the servo motor as a percentage of the rated output.

2. Current command torque [St-08]

   Displays the internal torque command calculated from the servo's control algorithm as a percentage of the rated torque.

3. Accumulated overload rate [St –09]

   Displays the current energy (load) as a percentage of the rated energy (load) of the servo motor.

4. Instantaneous maximum load factor [St–10]

   Displays the maximum (peak) load between the current time and the start of control after the servo is turned on as a percentage of the rated output.

5. Torque limit [St –11]

   Displays the maximum torque that the servo motor can output as a percentage of the rated torque.

6. DC link voltage [St–12]

   - The DC link voltage of the standard drive that uses 220 [V] is approximately 300 [V].
   - The maximum DC link voltage allowed for the standard drive that uses 220 [V] is 405 [V].
   - The overvoltage alarm [AL-41] triggers when the DC link voltage threshold is exceeded because there is either too much or too little regenerative resistance.
   - The normal DC link voltage in the regenerative section is 385 [V] or below.

7. Regenerative overload [St–13]

   Displays overload rate relative to the regenerative capacity of the servo drive.

4.3.5 I/O Status Display

1. CN1 I/O input contact point status [St-14]

   Refer to "4.1.4 External Input Contact Point Signal Display [St-14]."

2. CN1 I/O output contact status [St-15]

   Refer to "4.1.6 External Output Contact Signal Display [St-15]."

4.3.6 Miscellaneous Status and Data Display

1. Single-turn data (pulse) display [St-16]

   Displays the single-turn data of the encoder in pulses.

2. Single-turn data (degree) display [St-17]

   Displays the single-turn data of the encoder in degrees.

3. Multi-turn data display [St-18]

   Displays the multi-turn data of the encoder.

4. Inside temperature display [St-19]

   Displays the temperature sensor value of the servo drive in [℃].

5. Rated motor speed display [St-20]

   Displays the rated speed of the currently installed motor in [RPM].

6. Peak motor speed display [St-21]

   Displays the peak speed of the currently installed motor in [RPM].

7. Rated motor current display [St-22]

   Displays the rated current of the currently installed motor in [A].

8. U phase current offset display [St-23]
   Displays the U phase current offset in [mA].

9. V phase current offset display [St-24]

   Displays the V phase current offset in [mA].

4.3.7 Version Display

1. Software version display [St-25]

   Displays the version of the currently installed software.

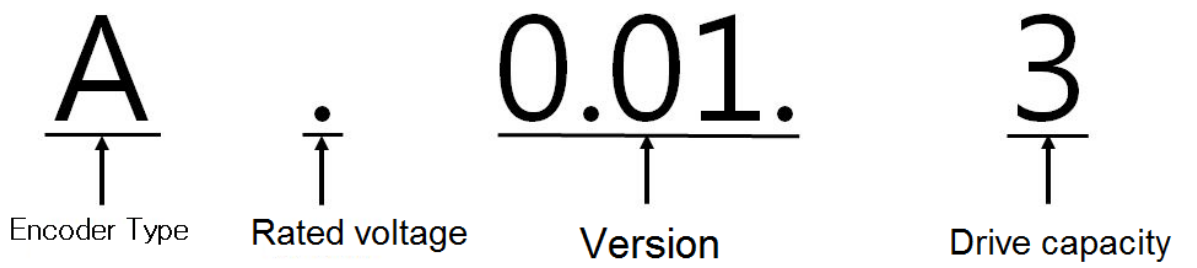

Char acter	Encoder Type
A	Quad
B	Serial

Sign	Rated voltage Type
Dot	400V
Non	200V

No.	Drive capacity
0	Default
1	100 [W]
2	200 [W]
3	400 [W]
4	750 [W]
5	1 [kW]
6	2 [kW]
7	3.5 [kW]
8	5 [kW]
9	7.5 [kW]
A	15 [kW]

4.4 Parameter Setting

4.4.1 System Parameter Setting

1. Motor ID setting [P0-00]

- Refer to motor ID: xxx on the label.

2. Encoder setting

- Encoder type [P0-01]
- Refer to encoder content of the label attached to the motor and the table below.
- Encoder pulse [P0-02]
- Refer to encoder content of the label attached to the motor and the table below.

Please caution encoder type is different depending on □ part in XML-SB04A□K1G103 from motor's name.

The label attached to the motor	System parameter setting	
XML-SB04A□K1G103	**Encoder Type [P0-01]**	**Enc Resolution [P0-02]**
A~G (Incremental parallel Type)	0	1024~6000p/r
N (Single turn Serial Type)	1	19 [bits]
M (Multi turn Serial Type)	3	19 [bits]

Note 1) When Single turn Serial Type is connected, it sets the value of P0-00, P0-01, P0-02 automatically.

Note 2) Incremental parallel Type is p/r input, Single turn Serial and Multi turn Serial Type is Bit input.

3. Operation mode setting [P0-03]: Sets operation mode of the servo.

Operation Mode	Operation Method
0	Torque control operation
1	Speed control operation
2	Position control operation
3	Mode contact ON: Position control operation Mode contact OFF: Speed control operation
4	Mode contact ON: Speed control operation Mode contact OFF: Torque control operation
5	Mode contact ON: Position control operation Mode contact OFF: Torque control operation

4. System ID setting

An ID can be given to the servo if RS422 communication and BUS communication are used for communication with the servo. Communication-related options are required in this case.

- Communication speed setting [P0-04]

  You can select the baud rate, the communication speed of RS422.

  - 0: 9600 [bps]
  - 1: 19200 [bps]
  - 2: 38400 [bps]
  - 3: 57600 [bps]

- System ID [P0-05]

  A unique ID can be given to the servo and used for individual communication with it.

5. Main power input mode setting [P0-06]

Sets the main power input mode and processing mode in case of phase loss.

- DIGIT 1: Sets the main power input type.

  (0: Single-phase power input. 1: Three-phase power input.)

- DIGIT 2: Sets how to handle errors and warnings in case of main power phase loss.

  (0: Error in case of main power phase loss. 1: Warning in case of main power phase loss.)

6. RST checking time setting [P0-07]

Sets checking time for main power phase loss.

7. Start-up display parameter setting [P0-08]

- You can set the parameter to be applied when the servo is turned on.
- There are 26 values available for setting, from [St-00] to [St-25]. Choose one for a specific parameter.

8. Regenerative overload derating factor setting [P0-09]

Sets derating factor for checking of regenerative resistance overload. When the derating value is set to 100% or below, the overload alarm triggers at a time proportional to the set value.

9. Regenerative resistance value setting [P0-10]

Sets the resistance value for regenerative braking resistance. If set to 0, a default resistance capacity embedded in the drive is used.

10. Regenerative resistance capacity setting [P0-11]

Sets the capacity for the current regenerative resistance. If set to 0, a default resistance capacity embedded in the drive is used.

11. Overload check default load factor setting [P0-12]

Indicates the load factor for starting continuous overload checks. If set to 100 or below, an overload check starts early and the overload alarm triggers early.

12. Overload warning level setting [P0-13]

Sets the level for continuous overload warning signal output. A warning signal is issued when the percentage value set relative to the alarm trigger value is reached.

13. Encoder pulse prescale output (encoder output scaling[P0-14])

When an encoder signal is output from the servo to the outside, its output pulses are pre-scaled as the value of encoder output scaling[P0-14]

- E.g.) Set the value of encoder output scaling[P0-14] in a motor whose encoder pulse is 3,000 [ppr].
- encoder output scaling[P0-14] = 12,000[ppr]

  => Encoder pulse output: 3,000 [ppr] × 4 = 12,000 [ppr]

14. PWM OFF delay time setting [P0-15]

Sets the time span between servo OFF command and actual PWM OFF. This is to prevent the motor from slipping down the vertical axis until the motor brake comes into effect after receiving the servo off command and then the brake signal. Set a PWM off delay when operating the motor brake with the output contact point brake signal. (Range: 0-1000 [ms]. Initial value: 10.)

15. DB control mode [P0-16]: Sets DB control mode.

- 0: Hold after DB stop
- 1: Release after DB stop.
- 2: Release after free run stop.
- 3: Hold after free run stop.

16. Servo function setting bit [P0-17]

Sets drive function per digit.

- DIGIT 1 -> Sets the operation direction of the servo.
  - 0: CCW (Forward), CW (Reverse)
  - 1: CW (Forward), CCW (Reverse)
- DIGIT 2 -> Sets the lock of the servo motor when the value of analog speed command is 0 in speed operation mode.
  - 0: Not for use
  - 1 : Use(Torque improvement when analog command stops.)
- DIGIT 3 -> Sets the open collector contacts for encoder ouput .
  - 0: Not for use
  - 1 : Use(ALO0,ALO1,ALO2 output contacts → open collector A,B,Z output)

Gruop x	AL-XX	AL0	AL1	AL2
Group 1	AL-10~16	ON	OFF	OFF
Group 2	AL-21~24	OFF	ON	OFF
Group 3	AL-30~35	ON	ON	OFF
Group 4	AL-40~43	OFF	OFF	ON
Group 5	AL-50~53	ON	OFF	ON
Group 6	AL-63~64	OFF	ON	ON
Group 7	AL-71~72	ON	ON	ON

- DIGIT 4 -> Sets the range of monitor output voltage.(can be applied both monitor1 and 2)
  - 0: -10~+10V

- 1 : 0~+10V

- DIGIT 5 -> Sets EEPROM save function in communication.
  - 0: EEPROM use.
  - 1: EEPROM not for use

17. DAC output setting

There are 2 kinds of DAC output, each of which is made every 200 [usec] according to the condition of used data.

- DAC output type [P0-18 DIGIT 1, DIGIT 2]

Type	Data Content	Type	Data Content
0	Speed feedback [RPM]	5	Following error [pulse]
1	Speed command [RPM]	6	DC link voltage [V]
2	Torque feedback [%]	D	Speed command (user) [RPM]
3	Torque command [%]	E	Torque command (user) [%]
4	Position command frequency [0.1 Kpps]		

- DAC output scale[P0-23], [P0-24]

  If the output value is too low or too high, output ratio can be adjusted.

  Sets magnification [Unit/V] for analog output channels 1 and 2.

  (Speed [RPM], torque [%], position command frequency [0.1 Kpps], position [pulse], DC link [V])

  Example) Channel 1 scale 100 =>100 [RPM] is output as 1 [V].

- DAC output offset [P0-19], [P0-20]

  Sets offset [Unit/V] for 1 ~ 2 analog output channels.

  (Speed [RPM], torque [%], position command frequency [0.1 Kpps], position [pulse], DC_Link [V])

4.4.2 Control Parameter Setting

The order of setting control parameters is as follows:

- Load inertia ratio [P1-00] setting: Refer to “5.2.6 Auto Gain Tuning [Cn-05].”
- Position proportional gain [P1-01] and [P1-02] adjustment:

  Increase the gain to the extent that the servo motor does not overshoot or take off (do not use during speed operation or torque operation).

- Speed proportional gain [P1-06] and [P1-07] adjustment:

  Increase the gain to the extent that the servo motor does not vibrate.

- Speed integral time constant [P1-08] and [P1-09] adjustment:

  Refer to the following table and perform setting according to the speed proportional gain.

(1) Inertia Ratio Setting [P1-00]

An inertia ratio shall be set by calculating load inertia from the machine system and rotor inertia from the motor specification table.

Setting inertia ratio against load is an important control parameter for the operation of the servo. Setting accurate inertia ratio is crucial for optimal servo operation.

- The following table contains control gain recommendations for different categories of inertia ratio:

Motor Flange	Inertia Ratio		Gain Range		
	Category	[Inertia] (Multiple)	Position Proportional Gain	Speed Proportional Gain	Speed Integral Gain
40 ~ 80	Low inertia	1 ~ 5	40 ~ 90	400 ~ 1000	10 ~ 40
	Medium inertia	5 ~ 20	20 ~ 70	200 ~ 500	20 ~ 60
	High inertia	20 ~ 50	10 ~ 40	100 ~ 300	50 ~ 100

* Inertia ratio can be tuned during a test drive if it is hard to calculate.

(2) Position Control Gain

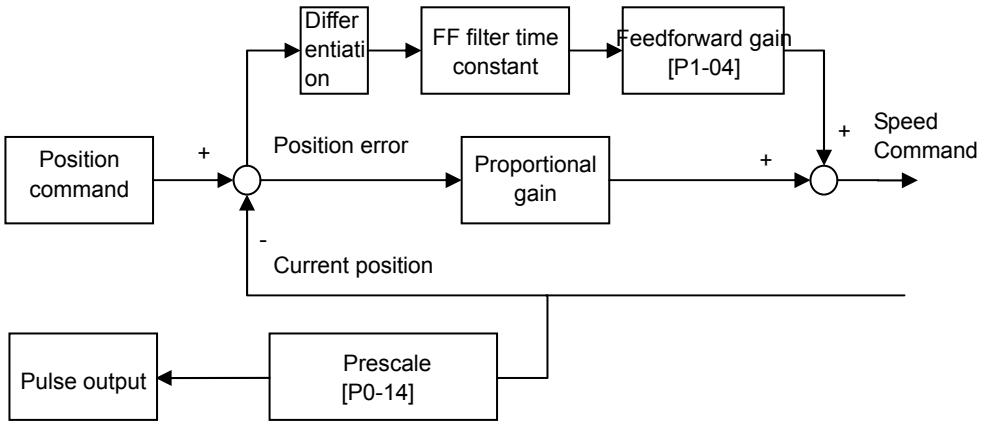

- Position command: Count the position command pulses entering from outside, and converts them into position commands, apply an electric gear ratio, and then pass through [P1-03] position command filter, and use it as an internal position command. In the case that Numerator of electric gear is bigger, a change of external input position command pulse influences on a change of internal position command. And this influence is getting bigger. So there is need to adjust '[P1-03] position command filter time constant'

- Current position: Count pulse signals received from the encoder and convert them to current position by using electronic gear ratio settings.

- Position proportional gain [P1-01] and [P1-02]: Convert the difference between the position command and the current position into a speed command by multiplying it by position proportional gain.

  * Recommended value = speed proportional gain [P1-06] / 10

- Feedforward gain [P1-04]: Calculate the gradient with the differential value of the position command. Reduce time to target position by adding the speed command to the gradient. If the resultant value is too big, overshooting or instability might occur in position control. Therefore, it is important to gradually increase the value from a small value while watching the test drive.
- Feedforward filter [P1-05]: If position commands change too drastically, the feedforward control filter vibrates. In this case, set a filter value to remove the vibration.

(3) Speed Control Gain

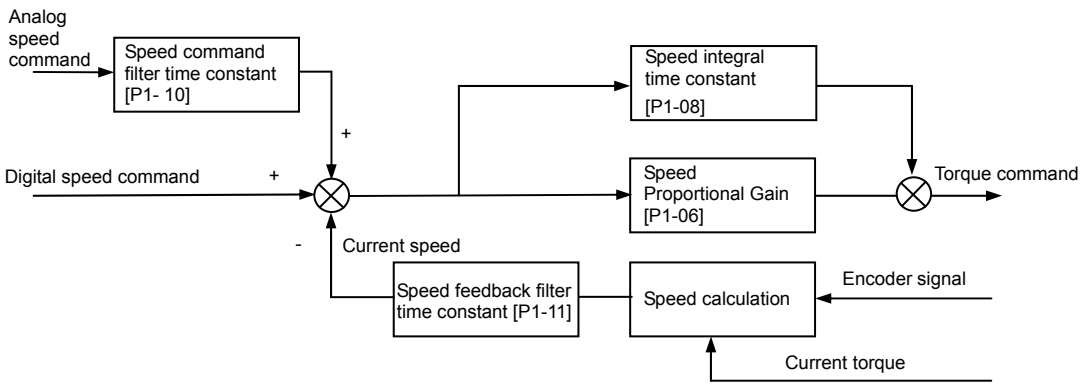

- Speed command: Use an analog speed signal entering from outside as a speed command after running it through the speed command filter [P1-10], or use a digital speed command and [RPM] set in the internal parameter.
- Current speed: Calculate speed by counting encoder signals as time progresses, and use the calculated speed as the current speed after running it through a filter. An algorithm, which projects speed by using the current torque and inertia, is used to make up for the errors occurring during speed calculation at a very low speed. Therefore, an accurate motor constant and inertia ratio are closely associated with the stability of motor speed control.
- Speed integral time constant [P1-08]: Calculate the integral value of the speed error, which is the difference between the command and the current speed, and convert it into a torque command by multiplying it by integral time constant.

  A decreased integral time constant solves the transient response issue and thus improves speed tracking. If the integral time constant is too small, however, overshoot occurs. On the other hand, if the integral time constant is too big, excessive response drops and proportional control takes over.

  *** Recommended value = 10000 / speed proportional gain [P1-06]**

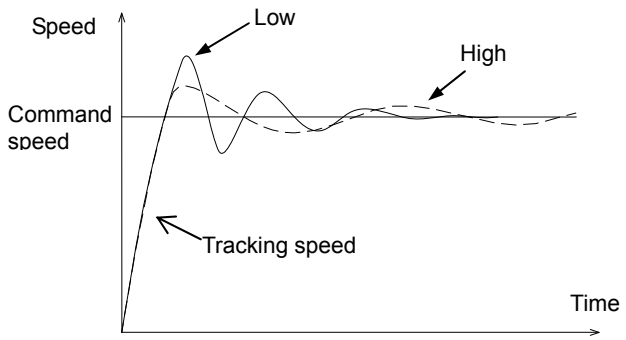

- Speed proportional gain [P1-06]: Convert the speed error into a torque command by multiplying it by proportional gain.

  If the result value is large, speed response accelerates and thus speed tracking increases. If the value is too big, however, vibration occurs. If the value is too small, speed response slows down and speed tracking decreases. Consequently, the servo loses its power.

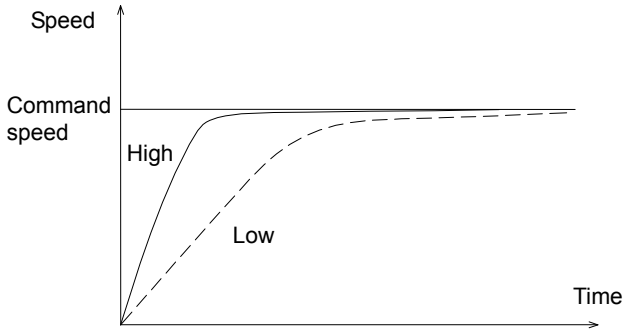

- Speed feedback filter time constant [P1-11]: If the speed of the motor changes because of vibration of the drive system, or vibration occurs due to gain when there is too much load inertia, you can control the vibration by applying a filter to speed feedback. If you set too great a value, speed responsiveness will be reduced and thus the power of control will be compromised.

  *** Recommended value = 0 to speed integral time constant [P1-08]/10**

(4) Torque Command Filter Time Constant Setting [P1-12]

You can improve the stability of command signals by setting a digital filter for analog torque command voltage. If you set too great a value, responsiveness for torque commands will be reduced. It is important to set an appropriate value for your system.

(5) Torque Limit Setting [P1-13], [P1-14]

You can set maximum torque limits for forward rotation [P1-13] and for reverse rotation [P1-14] separately. The setting is displayed as a percentage of the rated torque and the standard is 300 [%].

(6) Gain 1<->Gain 2 Transfer Mode Setting [P1-15] 0x0F (DIGIT 1)

Set speed gain transfer mode. [0x0F (DIGIT 1)]

- 0: Use only gain 1.
- 1: ZSPD auto gain transfer

  In case of zero speed, transfer from gain 1 to gain 2.

  In the opposite case, transfer from gain 2 to gain 1.
- 2: INPOS auto gain transfer

  In case of IN position, transfer from gain 1 to gain 2.

  In the opposite case, transfer from gain 2 to gain 1.
- 3: Manual gain transfer

  When the gain 2 contact is on, transfer from gain 1 to gain 2.

  In the opposite case, transfer from gain 2 to gain 1.

(7) Gain 1<->Gain 2 Conversion Time Setting [P1-16]

- Set gain transfer time during operation.
- When converting gain 1 to gain 2 and gain 2 to gain 1, conversion is scheduled according to the set time.

(8) P / PI Conversion Mode Setting [P1-15 DIGIT 2]

Set P and PI control conversion modes. [0xF0 (DIGIT 2)]

- 0: Control PI only.
- 1: Control P if the command torque is higher than the set torque [P1-24].
- 2: Control P if the command speed is higher than the set speed [P1-25].
- 3: Control P if the current acceleration is higher than the set acceleration [P1-26].
- 4: Control P if the current position error is higher than the set position error [P1-27].
- Control P if the PCON contact is on (highest priority).

With such functions, you can improve position operation by applying the P control operation stop function after PI control operation.

(9) Resonance Avoidance Operation Setting [P1-17], [P1-18], [P1-19]

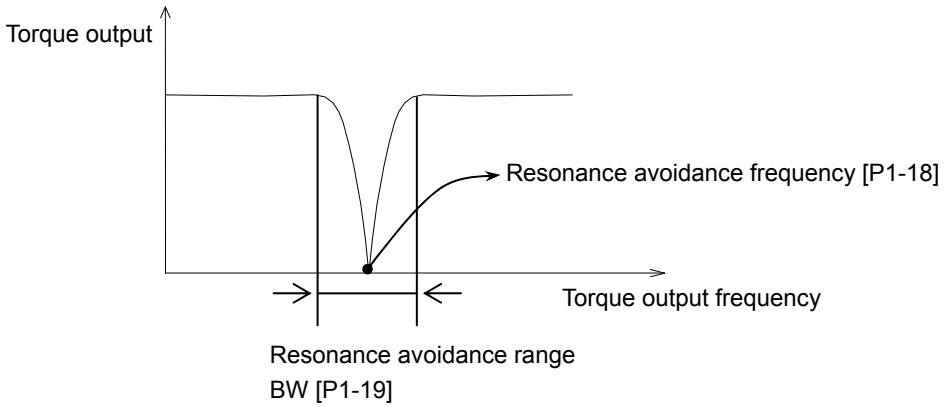

If vibration occurs at certain frequencies in certain systems because of mechanical resonance, you can control the vibration by controlling torque output for the specific frequencies.

- Resonance avoidance operation [P1-17]
  - 0: Not for use
  - 1: Use

4.4.3 Analog Input/Output Parameter Setting

(1) Analog Speed Scale Setting

- Analog speed scale [P2-17]: Set the analog speed command of 10 [V] in the unit of [RPM]. The maximum value is the maximum motor speed.
- Analog speed command offset [P2-18]: There are cases where a certain level of voltage remains on the analog signal access circuit, even at the 0 speed command. In this case, you can compensate it by setting the voltage as offset. The unit is [㎷].
- Zero speed command clamp setting

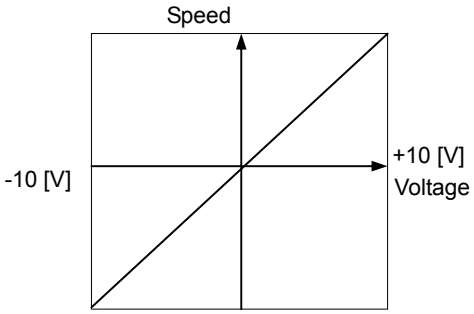

Zero speed command clamp voltage”
[P2-19] = 0

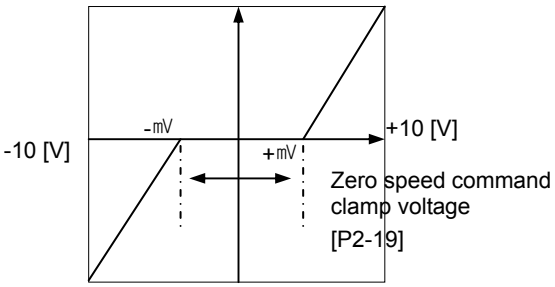

Zero speed command clamp voltage
[P2-19] = Not 0 [mV]

(2) Analog Torque Scale Setting

- Analog torque command scale [P2-20]: Set the analog torque command of 10 [V] as a percentage of the rated torque. The setting should be within the torque limit [P1-13] and [P-14] of system parameter setting.
- Torque command offset [P2-21]: There are cases in which a certain level of voltage remains on the analog circuit, even at the 0 torque command, because of problems with the circuit. You can compensate this by setting the voltage as offset. The unit is [㎷].
- Zero torque command clamp

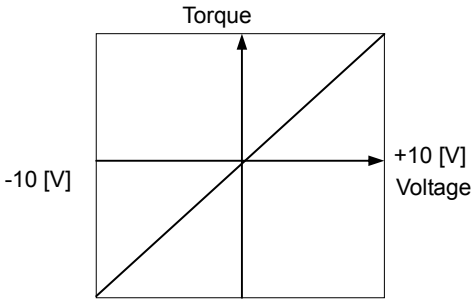

Zero torque command clamp voltage
[P2-22] = 0

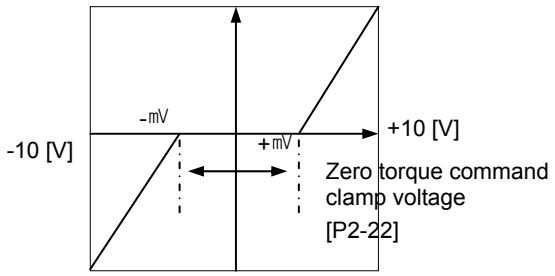

Zero torque command clamp voltage
[P2-22] = Not 0 [mV]

4.4.4 Input/Output Contact Point Parameter Setting

(1) Position Operation Parameter Setting

- Position reached output range [P2-11]: If the error pulse, which is the difference between the command position pulse and the follow position pulse, reaches this range, a signal is output to indicate that the position has been decided.

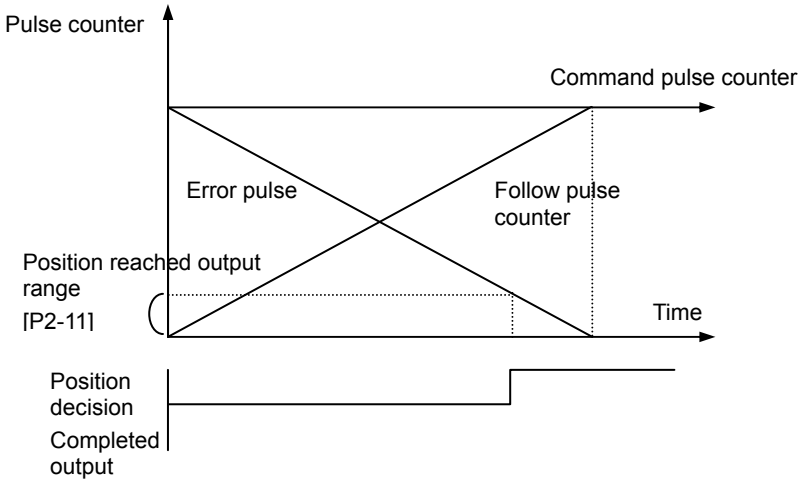

If you set too great a value, the target position complete output signal might occur during operation depending on the position command pulse. Therefore, it is important to set an appropriate value.

- Position operation follow error range [P4-11]

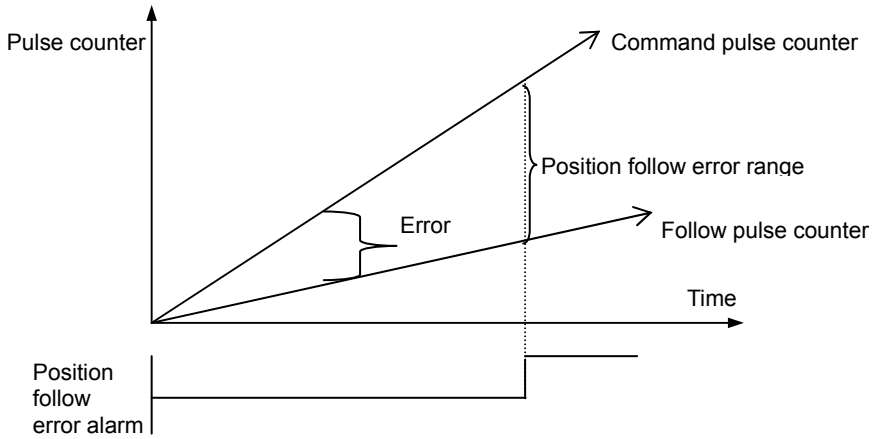

If the error pulse is greater than the position operation tracking error range, the position tracking error alarm [AL-51] triggers.

(2) Speed Operation Parameter Setting

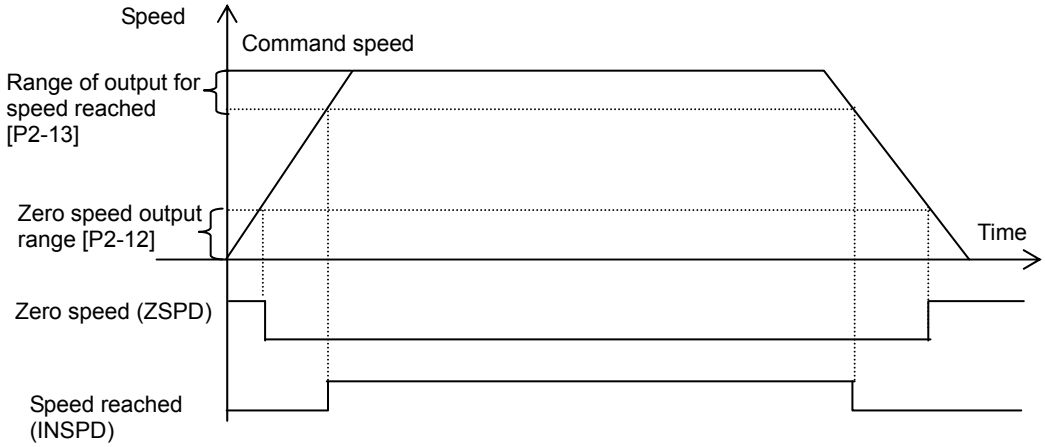

- Zero speed output range [P2-12]: When the current speed becomes lower than the set speed, the zero speed signal is output.
- Speed-reached output range [P2-13]: The speed-reached signal is output.

(3) Brake Signal Output Parameter Setting

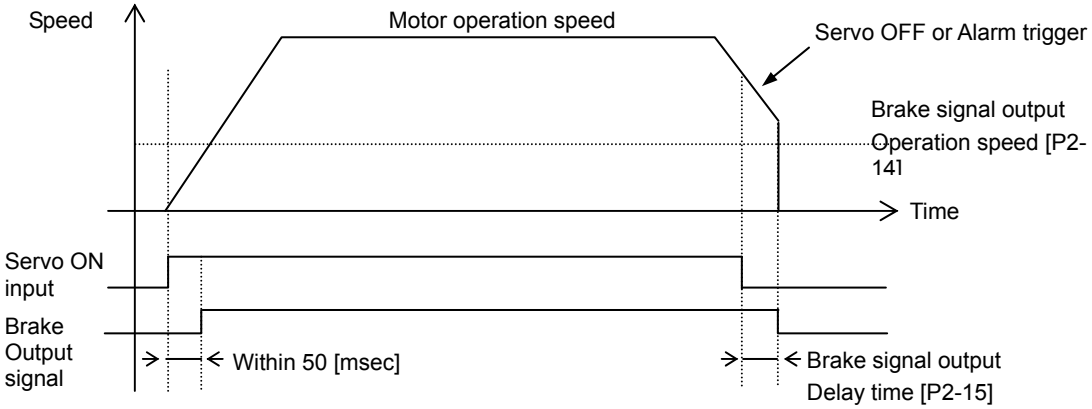

- Brake signal output operation speed [P2-14], brake signal output delay time [P2-15]

  In the event that an alarm triggers when the servo's built-in brake is applied to the vertical axis for the operation of the motor by the servo, this feature is activated to prevent the vertical axis from falling to the motor brake. This may occur as a result of the brake signal's turning off, which is triggered by first of either the brake signal output operation speed [P2-14] or the brake signal output delay time [P2-15].

(4) Position Pulse Clear Mode [P2-16]

Set the operation of position pulse clear mode in position operation mode.

Setting	Operation
0	Operate only on the edge where the contact point turns from off to on. (Do not operate when it is off or on.)
1	Operate immediately at contact point on_ Level. Then, maintain torque when contact is “High”.
2	Operate immediately at contact point on_ Level. Then, torque is “0” when contact is “High”.

(5) Output Signal Logic Definition Setting [P2-10]

You can change the output condition of the current output contact point to initial status ON or initial status OFF.

4.4.5 Speed Operation Parameter Setting

(1) Speed Command [P3-00]-[P3-06]

You can adjust operation speed in [RPM]. Operation speed is determined by speed command input contact points.

SPD1	SPD2	SPD3	Speed Control
OFF	OFF	OFF	Analog speed command
ON	OFF	OFF	Digital speed command 1
OFF	ON	OFF	Digital speed command 2
ON	ON	OFF	Digital speed command 3
OFF	OFF	ON	Digital speed command 4
ON	OFF	ON	Digital speed command 5
OFF	ON	ON	Digital speed command 6
ON	ON	ON	Digital speed command 7

(2) Acceleration/Deceleration Time

- Acceleration time [P3-08]: Sets the time required for the motor to reach the rated motor speed from zero speed in [ms] units.
- Deceleration time [P3-09]: Sets the time required for the motor to stop after running at the rated motor speed in [ms] units.

(3) S-Curve Operation [P3-11]

You can set acceleration/deceleration operation as an S-curve pattern for smooth acceleration/deceleration.

- 0: Trapezoidal -> Set acceleration/deceleration time [P3-08] and [P3-09].
- 1: Sinusoidal -> Set acceleration/deceleration time [P3-08] and [P3-09] + S-curve time [P3-10].

(4) Manual JOG Operation [Cn-00]

Press RIGHT for forward rotation at JOG operation speed [P3-12]. Press LEFT for reverse rotation at JOG operation speed [P3-12]. The contact point input status by CN1 is ignored.

(5) Program JOG Operation [Cn-01]

A test drive repeats from step 1 to step 4.
Set operation speed [P3-13]-[P3-16]) and operation time ([P3-17]-[P3-20]) for each step.

4.4.6 Position Operation Parameter Setting

(1) Input Pulse Logic [P4-00]

Set type of the position command input pulse and rotation method per logic.

- 0: A+B
- 1: CW+CCW, positive logic
- 2: Pulse + sign, positive logic
- 3: A+B
- 4: CW + CCW, negative logic
- 5: Pulse + sign, negative logic

PF + PR		Forward rotation	Reverse rotation
Phase A + B Positive Logic	0	PULS (CN1-9) SIGN (CN1-11)	PULS (CN1-9) SIGN (CN1-11)
CW+CCW Positive Logic	1	PULS (CN1-9) L Level SIGN (CN1-11)	PULS (CN1-9) SIGN (CN1-11) L Level
Pulse + direction positive logic	2	PULS (CN1-9) SIGN (CN1-11) H Level	PULS (CN1-9) SIGN (CN1-11) L Level

PF + PR		Forward rotation	Reverse rotation
Phase A + B Negative Logic	3	PULS (CN1-9) SIGN (CN1-11)	PULS (CN1-9) SIGN (CN1-11)
CW+CCW Negative Logic	4	PULS (CN1-9) H Level SIGN (CN1-11)	PULS (CN1-9) SIGN (CN1-11) H Level
Pulse + direction negative logic	5	PULS (CN1-9) SIGN (CN1-11) L Level	PULS (CN1-9) SIGN (CN1-11) H Level

(2) Electronic Gear Ratio [P4-01] ~ [P4-08]

The electronic gear ratio is the numerator/denominator form of the relation between the position command input pulse and the motor encoder pulse. It is important to set the ratio so that there is no error during position operation. The following describes how to set it:

*** Electronic gear ratio = transmission per input pulse x number of pulses per motor rotation / transmission per motor rotation**

e.g.) If deceleration ratio is 1/2, ball screw lead is 10 [㎜], and encoder pulse is 3000 in the unit of commands that control each pulse in 1 [㎛].

1. Transmission per input pulse = 1 × 10 - 3 = 0.001 [㎜]
2. Number of pulses per motor rotation = number of encoder pulses × 4 = 3000 × 4 = 12000
3. Transmission per motor rotation = 10 × 1/2 = 5 [㎜]
4. Electronic gear ratio = 12000 × 10 - 3/5 = 12/5

Therefore, the numerator and denominator of electronic gear ratio are 12 and 5 respectively.

NOTE 1) There are 12,000 pulses per rotation for a 3,000-pulse encoder because the servo drive controls pulses by multiplying them by four in quadrature type encoder signals.

In this case, motor speed ([RPM]) is calculated as follows:

Motor speed = 60 × electronic gear ratio × input pulse frequency / number of pulses per motor rotation

The following is how to calculate error pulse [St-05], the difference between command pulse and tracking pulse during operation. Error pulse = command pulse frequency × electronic gear ratio × {1 - (0.01 × [P1-05])} / [P1-01]

In the case of serial type encoder, It is 523288 pulses per 1 rotation without X4.

(3) Backlash Compensation [P4-13]

Sets backlash compensation by converting the amount of backlashes into the number of pulses if the position changes because of backlashes caused by position operation. If the travel range per rotation is changed because of abrasion of machine. You can use is by adjusting off-set variation volume caused by abrasion

(4) Electronic Gear Ratio Offset Adjustment: For reasons of wear and tear on the machine during position pulse command operation

If the operation distance per rotation changes, you can adjust the change caused by wear and tear with offset.

- Electronic gear ratio setting mode [P4-09]
  - 0: Use electronic gear ratio 1~4.
  - 1: Use electronic gear ratio 1. Override the value on the electronic gear ratio numerator.
- Electronic gear ratio numerator offset setting

  In the above example, if you enter 12,000 for the numerator and 5,000 for the denominator and turn on the EGEAR1 contact point, the numerator increases by one. If you turn on the EGEAR2 contact, the numerator decreases by one. The change is saved in the [P4-10] parameter.

If the offset is two, the electronic gear ratio for operation changes from 12000/5000 to 12002/5000. Also, if the offset is -2, the electronic gear ratio for operation changes from 12000/5000 to 11998/5000.

4.5 Alarms and Warnings

4.5.1 Servo Alarm Status Summary Display List

If an alarm triggers, the malfunction signal output contact point (ALARM) turns off and the dynamic brake stops the motor.

Alarm Code	Name	Details	What to inspect
AL-10	IPM Fault	Overcurrent (H/W)	Check for incorrect drive output wiring and incorrect encoder wiring. Check the motor ID / drive ID / encoder setting. Check for equipment clash or confinement.
AL-11	IPM temperature	IPM module overheat	Check for incorrect drive output wiring and incorrect encoder wiring. Check the motor ID, drive ID, and encoder setting. Check for equipment clash or confinement.
AL-14	Overcurrent	Overcurrent (S/W)	Check for incorrect drive output wiring and incorrect encoder wiring. Check the motor ID, drive ID, and encoder setting. Check for equipment clash or confinement.
AL-15	Current offset	Abnormal current offset	Replace the drive if [St-23] and [St-24] are 10% or higher of the rated current.
AL-16	Overcurrent (/CL)	Overcurrent (H/W)	Check for incorrect drive output wiring and incorrect encoder wiring. Check the motor ID, drive ID, and encoder setting. Check for equipment clash or confinement.
AL-21	Continuous overload	Continuous overload	Check for equipment clash or confinement. Check load and brake condition. Check for incorrect drive output wiring and incorrect encoder wiring. Check the motor ID, drive ID, and encoder setting.
AL-22	Room temperature	Drive overheat	Check the temperature inside the drive [St-19]. Install a cooling fan and check load.
AL-23	Regen. Overload	Regenerative overload	Check input voltage, regenerative braking resistance, and wiring. Replace the drive.

Alarm Code	Name	Details	What to inspect
AL-24	Motor cable open	Motor cable disconnection	Motor wiring
AL-30	Encoder comm.	Serial encoder communication error	Check for incorrect wiring of the serial encoder cable.
AL-31	Encoder cable open	Encoder cable disconnection	Check whether the encoder cable is disconnected.
AL-32	Encoder data error	Encoder data error	Check the [P0-02] setting and encoder wiring.
AL-33	Motor setting error	Motor ID setting error	Check the [P0-00] setting.
AL-34	Encoder Z PHASE Open	Encoder Z PHASE cable broken	Check the encoder cable
AL-35	Low Battery Error	Low voltage error	BackUp battery has not enough voltage, Change battery After replacing battery. ※Power "ON" and Homing operation are absolutely needed. (apply from S/W Ver 1.28)
AL-40	Under voltage	Low voltage	Check input voltage and power unit wiring.
AL-41	Overvoltage	Overvoltage	Check input voltage and wiring. Check for braking resistance damage. Check for excessive regenerative operation. Check regenerative resistance.
AL-42	RST power fail	Main power failure	Check power unit wiring and power.
AL-43	Control power fail	Control power failure	Check power unit wiring and power.
AL-50	Over speed limit	Overspeed	Check the encoder, encoder setting, encoder wiring, gain setting, motor wiring, motor ID, electronic gear ratio, and speed command scale.
AL-51	Position following	Excessive position error	Check the excessive position command pulse setting [P4-11], wiring, limit contact point, gain setting, encoder setting, and electronic gear ratio. Check for equipment confinement and load.
AL-53	Over pulse CMD	Pulse command frequency error	Check pulse command frequency from the upper level controller. Check command pulse type.
AL-54	Speed Deviation	Excessive speed error	Check for incorrect wiring in the drive output and encoder. Also, check the connection and load status of the equipment.
AL-55	Motor Over Run	Motor overrun	Check for incorrect wiring in the drive output and encoder. Also, check the connection and load status of the equipment.
AL-63	Parameter checksum	Parameter error	Check the value of parameters
AL-64	Parameter range	Parameter range error	Check the value of parameters
AL-71	Invalid factory setting	Factory setting error	Check the value of parameters
AL-72	GPIO setting	Output contact point setting error	Check the value of parameters

4.5.2 Servo Warning Status Summary Display List

If a warning code is displayed as the current operation status [St-00], the servo drive is operating abnormally. Check what needs to be inspected for the issue.

Warning State (CODE)	Name	Cause	What to inspect
W-01	RST_PFAIL	Main power phase loss	If the [P0-06] DIGIT 2 is set to 1, the main power fails.
W-02	LOW_BATT	Battery low	When apply absolute value encoder, Output voltage of BackUp batter need to replace.
W-04	OV_TCMD	Excessive torque command	More than the maximum torque commands have been entered.
W-08	OV_VCMD	Overspeed command	More than the maximum speed commands have been entered.
W-10	OV_LOAD	Overload warning	The maximum overload [P0-13] has been reached.
W-20	SETUP	Capacity setting	The electric current capacity of the motor is bigger than that of the drive.
W-40	UD_VTG	Low voltage warning	When [P0-06] DIGIT 2 is set to 1, the DC link voltage is 190 V or below.
W-80	EMG	EMG contact point	Check the I/O wiring and [P2-09] setting

- Warning code is indicated in hexadecimal. If the over 2 warning codes occurs, the sum of warning codes will be displayed. For example, if [W-04] Excessive Toque Command and [W-08] Excessive Speed Command are occurred at the same time, [W-0C] will be displayed.

- If warning code 80 occurs, “SV-ON” state changes to “SV-OFF” state automatically.

-To avoid warning code 80, wire EMG contact or change EMG input signal logic definition.

(Refer to 4.1 How to Use the Loader)

4.6 Motor Type and ID (to be continued on the next page)

Model Name	ID	Watt	Notes
SAR3A	1	30	
SAR5A	2	50	
SA01A	3	100	
SA015A	5	150	
SB01A	11	100	
SB02A	12	200	
SB04A	13	400	
HB02A	15	200	Hollow type
HB04A	16	400	Hollow type
SC04A	21	400	
SC06A	22	600	
SC08A	23	800	
SC10A	24	1000	
SC03D	25	300	
SC05D	26	450	
SC06D	27	550	
SC07D	28	650	
SE09A	61	900	
SE15A	62	1500	
SE22A	63	2200	
SE30A	64	3000	
SE06D	65	600	
SE11D	66	1100	
SE16D	67	1600	
SE22D	68	2200	
SE03M	69	300	
SE06M	70	600	
SE09M	71	900	
SE12M	72	1200	
SE05G	73	450	
SE09G	74	850	

Model Name	ID	Watt	Notes
SE13G	75	1300	
SE17G	76	1700	
HE09A	77	900	Hollow type
HE15A	78	1500	Hollow type
SF30A	81	3000	
SF50A	82	5000	
SF22D	85	2200	
LF35D	190	3500	
SF55D	87	5500	
SF75D	88	7500	
SF12M	89	1200	
SF20M	90	2000	
LF30M	192	3000	
SF44M	92	4400	
SF20G	93	1800	
LF30G	191	2900	
SF44G	95	4400	
SF60G	96	6000	
SG22D	111	2200	
LG35D	193	3500	
SG55D	113	5500	
SG75D	114	7500	
SG110D	115	11000	
SG12M	121	1200	
SG20M	122	2000	
LG30M	195	3000	
SG44M	124	4400	
SG60M	125	6000	
SG20G	131	1800	
LG30G	194	2900	
SG44G	133	4400	
SG60G	134	6000	

Model Name	ID	Watt	Notes
SG85G	135	8500	
SG110G	136	11000	
SG150G	137	15000	
FB01A	711	100	
FB02A	712	200	
FB04A	713	400	
FC04A	721	400	
FC06A	722	600	
FC08A	723	800	
FC10A	724	1000	
FC03D	725	300	
FC05D	726	500	
FC06D	727	600	
FC07D	728	700	
FE09A	761	900	
FE15A	762	1500	
FE22A	763	2200	
FE30A	764	3000	
FE06D	765	600	
FE11D	766	1100	
FE16D	767	1600	
FE22D	768	2200	
FE03M	769	300	
FE06M	770	600	
FE09M	771	900	
FE12M	772	1200	
FE05G	773	450	
FE09G	774	850	
FE13G	775	1300	
FE17G	776	1700	

Model Name	ID	Watt	Notes
FF30A	781	3000	
FF50A	782	5000	
FF22D	785	2200	
FF35D	786	3500	
FF55D	787	5500	
FF75D	788	7500	
FF12M	789	1200	
FF20M	790	2000	
FF30M	791	3000	
FF44M	792	4000	
FF20G	793	1800	
FF30G	794	2900	
FF44G	795	4400	
FF60G	796	6000	
FF75G	804	7500	
FG22D	811	2200	
FG35D	812	3500	
FG55D	813	5500	
FG75D	814	7500	
FG12M	821	1200	
FG20M	822	2000	
FG30M	823	3000	
FG44M	824	4400	
FG20G	831	1800	
FG30G	832	2900	

Model Name	ID	Watt	Notes
DB03D	601	63	
DB06D	602	126	
DB09D	603	188	
DC06D	611	126	
DC12D	612	251	
DC18D	613	377	
DD12D	621	251	
DD22D	622	461	
DD34D	623	712	
DE40D	632	838	
DE60D	633	1257	
DFA1G	641	1728	
DFA6G	642	2513	

Model Name	ID	Watt	Notes

5 Handling and Operation

5.1 What to Check Before Operation

Thoroughly check the following lists during test drive to prevent injury or product damage in servo motor.

5.1.1 Wiring Check

1. Is the voltage (AC 200 [V]) appropriate for the power input terminals?
2. Are the power cables (U, V, W, and FG) between the drive and the motor connected correctly?
3. Is the voltage of 24 [V] connected to control signals correctly?
4. Is the regenerative resistance appropriate for the capacity and correctly connected?
5. Are the wiring cables free from bends or dents?
6. Are the grounding and shielding free from defects?

5.1.2 Drive Signal (CN1) Wiring Check

Make sure that the wiring and contact for drive signals are as in the following table:

Pin Number	Pin Name	State of Contact	Pin Number	Pin Name	State of Contact
18	EMG	ON	19	CWLIM	ON
47	SVON	OFF	20	CCWLIM	ON
48	STOP	OFF	17	ALMRST	OFF

The above is factory-initialized status. Different functions may be allocated according to input signal allocations ([P2-00], [P2-01], [P2-02], [P2-03], and [P2-04]).

5.1.3 Surrounding Environment Check

Is there any metal powder or water around wires?

5.1.4 Machine Status Check

1. Is the coupling of the servo motor in good condition?
2. Are the locking bolts tightly screwed?
3. Are there any obstacles in the machine operation area?

5.1.5 System Parameter Check

1. Is the motor ID setting [P0-00] in good condition?
2. Are the encoder type [P0-01] and the encoder pulse [P0-02] in good condition?
3. Is control gain set to an appropriate value?

*Note: Refer to "Appendix 2 Test Drive Procedure."

5.2 Handling

5.2.1 Manual JOG Operation [Cn-00]

The drive performs manual JOG operation by itself.

1. Press [SET] in [Cn-00] and [JoG] is displayed.
2. Press [SET] and [SV-on] is displayed and the servo turns on for operation.

   If an alarm triggers, check wiring and other possible causes before restarting.
3. Press and hold [UP] and the motor turns forward (CCW) at the JOG operation speed [P3-12].
4. Press and hold [DOWN] and the motor turns counterclockwise at the JOG operation speed [P3-12].
5. Press [SET] again and the manual JOG operation finishes and the servo turns off.
6. Press [MODE] for a while and then you return to the parameter screen [Cn-00].

Related Parameters	Speed	Initial
[P3-08]	Speed command acceleration time [ms]	0
[P3-09]	Speed command deceleration time [ms]	0
[P3-10]	Speed command S-curve time [ms]	10
*[P3-11]	Speed operation pattern	0
[P3-12]	JOG operation speed [RPM]	500

The parameter marked with “*” cannot be modified when the servo is on.

[Example of handling manual JOG operation]

Order	Loader Displays	Keys to Use	What to Do
1			Displays the speed control mode with main power and control power permitted.
2		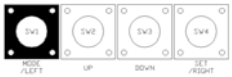	Press [MODE] to move to [Cn-00].
3		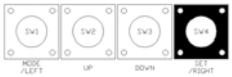	Press [SET] to enter manual JOG operation.
4			Press [SET] to turn on the servo.
5			Press and hold [UP] when the servo is on and the motor turns forward (CCW). Lift your hand off the key and the motor stops.
6			Press and hold [DOWN] when the servo is on and the motor turns reverse (CW). Lift your hand off the key and the motor stops.
7			Press [SET] and the servo changes to OFF.
8	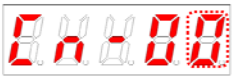	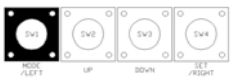	Press [MODE] for a second and you return to the parameter screen [Cn-00].

※ "▯" indicates flickering.

5.2.2 Program JOG Operation [Cn-01]

Continuously operates according to the program already set.

1. Press [SET] in [Cn-01] and [P-JoG] is displayed.
2. Press [SET] and [run] is displayed. The program JOG operation starts after the servo is turned on.

   (If an alarm triggers at this moment, check the wiring of the servo and other possible causes before restarting.)
3. Press [SET] again and the program JOG operation finishes and the servo is turned off.
4. Press [MODE] for a while and then you return to the parameter screen [Cn-00].
5. Four operation steps repeat continuously from 0 to 3. Operation speed and time can be set in the following parameter:

Related Parameters	Speed	Initial
[P3-08]	Speed command acceleration time [ms]	100
[P3-09]	Speed command deceleration time [ms]	100
[P3-10]	Speed command S-curve time [ms]	10
[P3-11]	Speed operation pattern	0

Step	Program Operation Speed	Program Operation Time
0	[P3-13]	[P3-17]
1	[P3-14]	[P3-18]
2	[P3-15]	[P3-19]
3	[P3-16]	[P3-20]

[Example of handling program JOG operation]

Order	Loader Displays	Keys to Use	What to Do
1	Sc.bb		Displays the speed control mode with main power and control power permitted.
2	Cn-00		Press [MODE] to move to [Cn-00].
3	Cn-01		Press [UP] or [DOWN] to move to [Cn-01].
4	P-JoG		Press [SET] to enter program Jog operation.
5	run		Press [SET] and the motor starts operating according to the predefined program.
6	donE		Press [SET] again and the operation ends. [done] is displayed.
7	Cn-01		Press [MODE] for approximately one second to return to [Cn-01].

※ "▯" indicates flickering.

5.2.3 Alarm Reset [Cn-02]

Reset the alarm that went off.

1. Contact alarm reset: If you turn on ALMRST among input contacts, the alarm is reset and becomes normal.
2. Operation alarm reset: If you press [SET] in the alarm reset [Cn-02] parameter among operation handling parameters, [ALrst] is displayed. If you press [SET] again, the alarm is reset and becomes normal.

   ※ If the alarm keeps ringing after the reset, check and remove possible causes and then repeat the process.

[Example of alarm reset]

Order	Loader Displays	Keys to Use	What to Do
1		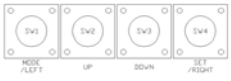	Displays the speed control mode with main power and control power permitted.
2	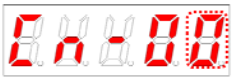		Press [MODE] to move to [Cn-00].
3			Press [UP] or [DOWN] to move to [Cn-02].
4		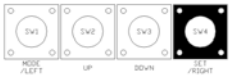	Press [SET] to enter alarm reset mode.
5			Press [SET] to reset the alarm. [done] is displayed.
6		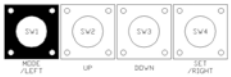	Press [MODE] for a second to return to [Cn-02].

※ "▯" indicates flickering.

5.2.4 Reading Alarm History [Cn-03]

Check the saved alarm history.

[Example of getting alarm history]

Order	Loader Displays	Keys to Use	What to Do
1		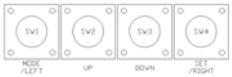	Displays the speed control mode with main power and control power permitted.
2		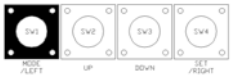	Press [MODE] to move to [Cn-00].
3			Press [UP] or [DOWN] to move to [Cn-03].
4			Press [SET] to start reading alarm history.
5		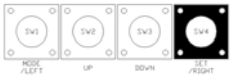	Press [SET] and the most recent alarm code is displayed. Example: Recent first history [AL-42]: Main power failure occurred. 01: Latest alarm 20: 20th previous alarm
6			Press [UP] or [DOWN] to read alarm history. Example: The second previous history [AL-10]: Over current (HW) occurred. 01: Latest alarm 20: 20th previous alarm
7		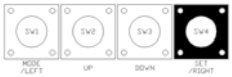	Press [SET] to finish reading alarm history. [done] is displayed.
8	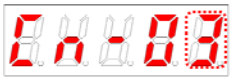		Press [MODE] for a second to return to [Cn-03].

※ "▯" indicates flickering.

※ "AL-43" is not saved from OS Ver 1.02

5.2.5 Alarm History Reset [Cn-04]

Delete all currently stored alarm history.

[Example of alarm history reset]

Order	Loader Displays	Keys to Use	What to Do
1		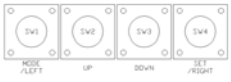	Displays the speed control mode with main power and control power permitted.
2		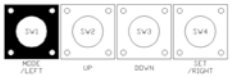	Press [MODE] to move to [Cn-00].
3			Press [UP] or [DOWN] to move to [Cn-04].
4			Press [SET] to enter alarm history reset.
5		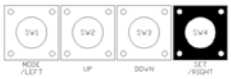	Press [SET] to delete alarm history. [done] is displayed.
6	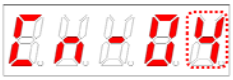		Press [MODE] for a second to return to [Cn-04].

※ "▯" indicates flickering.

5.2.6 Auto Gain Tuning [Cn-05]

Perform automatic tuning operation.

1. Press [SET] from the [Cn-05] parameter and [Auto] is displayed.
2. Press [SET] and [run] is displayed and automatic gain tuning starts.

   If an alarm triggers at this moment, check the wiring of the servo and other possible causes before restarting.
3. When gain adjustment is completed, inertia ratio [%] is displayed, and [P1-00], [P1-06] and [P1-08] is automatically changed and saved.

Related Parameters	Name	Initial
[P1-20]	Auto gain tuning speed [100 RPM]	8
[P1-21]	Auto gain tuning distance	3

[Example of handling auto gain tuning]

Order	Loader Displays	Keys to Use	What to Do
1		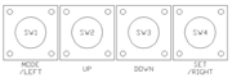	Displays the speed control mode with main power and control power permitted.
2	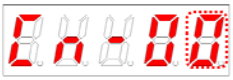	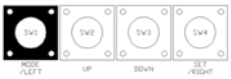	Press [MODE] to move to [Cn-00].
3			Press [UP] or [DOWN] to move to [Cn-05].
4			Press [SET] to enter automatic gain tuning.
5			Press [SET] to start three cycles of forward rotation and reverse rotation.
6		-	Upon completion of automatic tuning, the tuning result will be displayed on the loader. Press [SET] for retuning.
7			Press [MODE] for a second to return to [Cn-05].

※ "▯" indicates flickering.

5.2.7 Phase Z Search Operation [Cn-06]

Perform phase Z search operation.

1. Press [SET] in [Cn-06] and [Z-rtn] is displayed.
2. Press [SET] and [run] is displayed and the servo turns on.
3. While you hold down UP, the motor keeps turning forward (CCW) until it finds the phase Z position of the encoder.
4. While you hold down DOWN, the motor keeps turning counterclockwise until it finds the phase Z position of the encoder.
5. Press [SET] and [done] is played and the phase Z search ends.

※ This function is useful for finding the Z position and assembling it by a specific standard.

Related Parameters	Name	Initial
[P3-07]	Phase Z search operation speed setting [RPM]	10

[Example of handling phase Z search operation]

Order	Loader Displays	Keys to Use	What to Do
1		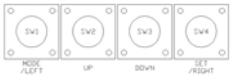	Displays the speed control mode with main power and control power permitted.
2	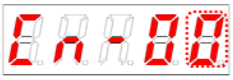		Press [MODE] to move to [Cn-00].
3			Press [UP] or [DOWN] to move to [Cn-06].
4			Press [SET] to enter phase Z search operation.
5			Press [SET] to turn on the servo.
6			Press [UP] and the motor turns forward (CCW) until it finds phase Z. Press [DOWN] and the motor turns reverse (CW) until it finds phase Z.
7			Press [SET] to end the phase Z search operation mode. The servo turns off and [done] is displayed.
8	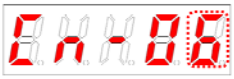	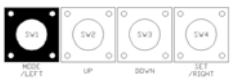	Press [MODE] for a second to return to the parameter screen [Cn-06].

※ "▯" indicates flickering.

5.2.8 Input Contact Forced ON/OFF [Cn-07]

The drive forcibly turns on/off the input contact without an upper level controller or I/O jig.

(1) Input Contact Forced ON/OFF Setting

The positions of the seven segment LEDs and CN1 contacts correspond as follows.

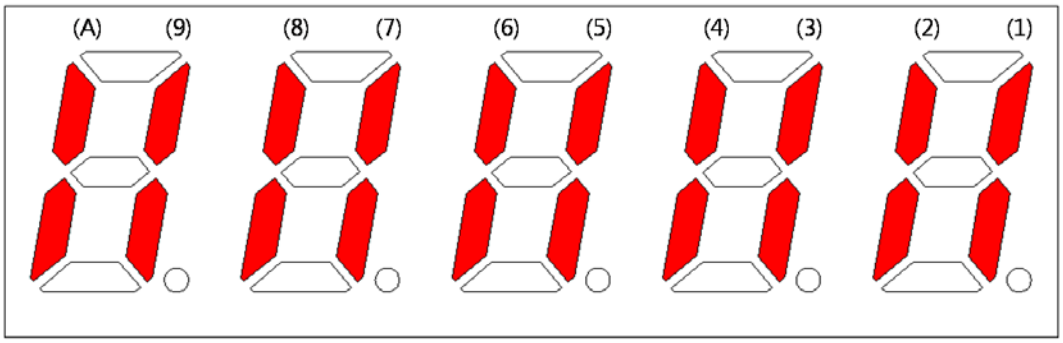

If an LED that corresponds to a contact is turned on/off, it indicates ON/OFF accordingly.

[Input Contact Setting]

Number	(A)	(9)	(8)	(7)	(6)	(5)	(4)	(3)	(2)	(1)
CN1 pin number	48	18	19	20	46	17	21	22	23	47
Allocated default signal name	STOP	EMG	CWLIM	CCWLIM	DIR	ALMRST	SPD3	SPD2	SPD1	SVON

Press [UP] on each digit and the (A), (8), (6), (4), and (2) signals turn on or off forcibly.

Press [DOWN] on each digit and the (9), (7), (5), (3), and (1) signals turn on or off forcibly.

Press [MODE] to move to another digit.

(2) Example of Input Contact Forced ON/OFF

(SVON ON → EMG ON → EMG OFF → SVON OFF)

[Example of handling input contact forced ON/OFF]

Order	Loader Displays	Keys to Use	What to Do
1	Cn-00		Press [MODE] to move to [Cn-00].
2	Cn-07		Press [UP] or [DOWN] to move to [Cn-07].
3	ItEst		Press [SET] to enter input forced ON/OFF mode.
4	HHHH2		Press [SET] to enter forced input bit setting.
5	00001		Press [DOWN] to turn on the servo forcibly.
6	HHHH1		Press [MODE] at the blinking cursor to move to the desired digit, DIGIT 5.
7	00001		Press [DOWN] to turn on EMG forcibly.
8	00001		Press [DOWN] to turn off EMG forcibly.
9	00001		Press [MODE] at the cursor to move to the desired digit, DIGIT 1.
10	00000		Press [DOWN] to turn off the servo forcibly.
11	donE		Press [SET] to end input forced ON/OFF mode. [done] is displayed.
12	Cn-07		Press [MODE] for a second to return to [Cn-07].

※ "▯" indicates flickering.

5.2.9 Output Contact Forced ON/OFF [Cn-08]

Without an upper level controller or I/O jig, the drive forcibly turns on/off the output contact.

(1) Output Contact Forced ON/OFF Setting

The positions of the seven segment LEDs and CN1 contact correspond as follows.

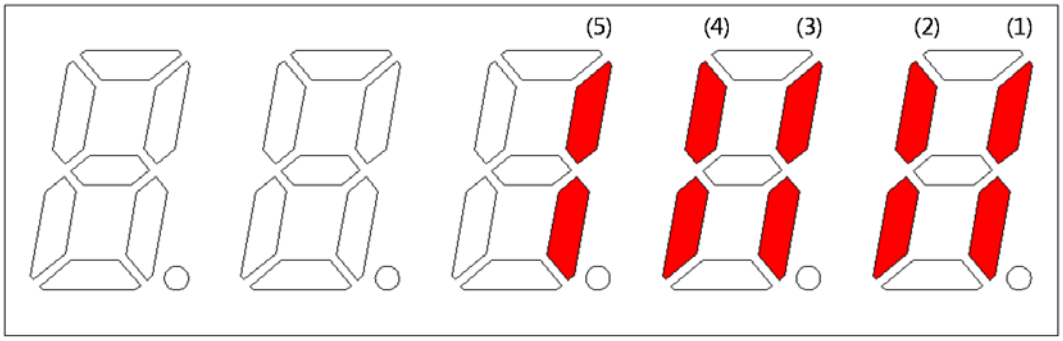

If an LED that corresponds to a contact is turned on/off, it indicates ON/OFF accordingly.

[Output Contact Setting]

Number	(5)	(4)	(3)	(2)	(1)
CN1 - pin number	45	44	43	40 /41	38 / 39
Allocated default signal name	INPOS	BRAKE	ZSPD	READY	ALARM

Press [UP] on each digit and the (4) and (2) signals are turned on or off for forced output.

Press [Down] on each digit and the (5), (3) and (1) signals are turned on or off for forced output.

Press [MODE] to move to another digit.

(2) Example of Output Contact Forced ON/OFF

(BRAKE OFF)

[Example of handling output contact forced ON/OFF]

Order	Loader Displays	Keys to Use	What to Do
1	Cn-00		Press [MODE] to move to [Cn-00].
2	Cn-08		Press [UP] or [DOWN] to move to [Cn-08].
3	otEst		Press [SET] to enter input forced ON/OFF setting.
4	HHHH0		Press [SET] to enter forced output bit setting.
5	0001		Press [MODE] at the blinking cursor to move to the desired digit, DIGIT 2, and it rotates.
6	0001		Press [UP] to turn off the brake signal.
7	donE		Press [SET] to end input forced ON/OFF mode. [done] is displayed.
8	Cn-08		Press [MODE] for a second to return to [Cn-08].

※ "▯" indicates flickering.

5.2.10 Parameter Reset [Cn-09]

Reset parameter data.

[Example of initializing parameters]

Order	Loader Displays	Keys to Use	What to Do
1			Displays the speed control mode with main power and control power permitted.
		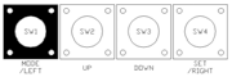	Press [MODE] to move to [Cn-00].
2			Press [UP] or [DOWN] to move to [Cn-09].
3			Press [SET] to enter parameter reset.
4		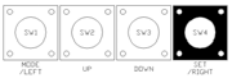	Press [SET] to reset data. [done] is displayed.
5	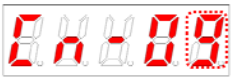		Press [MODE] for a second to return to [Cn-09].

[Cn-09 In the case of parameter initialization, unapplied parameters]

Parameter	Detailed parameter
P0-XX	P0-00~P0-02, P0-04, P0-05, P0-10, P0-11, P0-27~P0-29
P2-XX	P2-00~P2-10, P2-17, P2-18, P2-20, P2-21

※ "▯" indicates flickering.

5.2.11 Automatic Speed Command Offset Correction [Cn-10]

This calibrates the offset of analog speed commands automatically.

The range of adjustable speed command analog voltage is from +1 V to -1 V. If offset voltage exceeds this range, [oVrnG] is displayed and calibration is not allowed.

You can check the corrected offset value in the analog speed offset [P2-18].

[Example of handling automatic speed command offset calibration]

Order	Loader Displays	Keys to Use	What to Do
1	Cn-00		Press [MODE] to display [Cn-00].
2	Cn-10		Press [UP] or [DOWN] to move to [Cn-10].
3	A-SCo		Press [SET] to enter offset correction.
4	donE or oVrnG		Press [SET] to compensate offset. [done] is displayed. If the value exceeds the allowed range, [oVrnG] is displayed.
5	Cn-10		Press [MODE] for a second to return to [Cn-10].

※ "▯" indicates flickering.

5.2.12 Automatic Torque Command Offset Correction [Cn-11]

This calibrates the offset of analog torque commands automatically.

The range of adjustable torque command analog voltage is from +1 V to -1 V. If offset voltage exceeds this range, [oVrnG] is displayed and calibration is not allowed.

You can check the corrected offset value in the analog torque offset [P2-21].

[Example of handling automatic torque command offset correction]

Order	Loader Displays	Keys to Use	What to Do
1	Cn-00		Press [MODE] to display [Cn-00].
2	Cn-11		Press [UP] or [DOWN] to move to [Cn-11].
3	A-tCo		Press [SET] to enter offset correction.
4	donE or oVrnG		Press [SET] to compensate offset. [Done] is displayed. If the value exceeds the allowed range, [oVrnG] is displayed.
5	Cn-11		Press [MODE] for a second to return to [Cn-11].

※ "▯" indicates flickering.

5.2.13 Manual Speed Command Offset Correction [Cn-12]

This calibrates the offset value of analog speed commands manually. Example: -10

The range of adjustable speed command analog voltage is from +1 V to -1 V. If offset voltage exceeds this range, [oVrnG] is displayed and calibration is not allowed.

You can check the corrected offset value in the analog speed offset [P2-18].

[Example of handling manual speed command offset correction]

Order	Loader Displays	Keys to Use	What to Do
1	Cn-00		Press [MODE] to display [Cn-00].
2	Cn-12		Press [UP] or [DOWN] to move to [Cn-12].
3	AuSCo		Press [SET] to enter offset correction.
4	0		Press [SET] to enter offset correction setting. The current offset value displayed.
5	-10		Press [UP] or [DOWN] to adjust the value.
6	donE	or	Press [SET] to save the adjusted offset value. [Done] is displayed. If you press [MODE] and it will not be saved.
7	Cn-12		Press [MODE] for a second to return to [Cn-12].

※ "▯" indicates flickering.

5.2.14 Manual Torque Command Offset Correction [Cn-13]

This calibrates the offset value of analog torque commands manually.

The range of adjustable torque command analog voltage is from +1 V to -1 V. If offset voltage exceeds this range, [oVrnG] is displayed and calibration is not allowed.

You can check the corrected offset value in the analog torque command offset [P2-21].

[Example of handling manual torque command offset correction]

Order	Loader Displays	Keys to Use	What to Do
1	Cn-00		Press [MODE] to display [Cn-00].
2	Cn-13		Press [UP] or [DOWN] to move to [Cn-13].
3	AutCo		Press [SET] to enter offset correction.
4	30		Press [SET] to enter offset correction setting. The current offset value displayed.
5	30		Press [UP] or [DOWN] to adjust the value.
6	donE	or	Press [SET] to save the adjusted offset value. [Done] is displayed. If you press [MODE] and it will not be saved.
7	Cn-13		Press [MODE] for a second to return to the parameter screen [Cn-13].

※ "▯" indicates flickering.

5.2.15 Absolute Encoder Reset [Cn-14]

Initialize values of [St-16], [St-17],[St-18] to “0” when It is connected with Multi turn Motor.

[Example of how to use Absolute Encoder Reset]

Order	Loader Displays	Keys to Use	What to Do
1	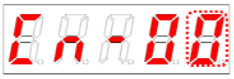	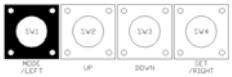	Press [MODE] key to display [Cn-00].
2			Move to [Cn-14] by Pressing [UP] or [DOWN] key.
3		or 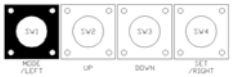	When pressing [SET] key, the value of absolute encoder data will be initialized to “0”. Then, it will be displayed [donE]. When pressing [MODE] key, it will be returned to [Cn-14] without initialization.
4			Press [MODE] for a second to return to the parameter screen [Cn-14].

※ “ ” indicates flickering.

5.2.16 Instantaneous Maximum Load Factor Initialization [Cn-15]

Reset the instantaneous maximum load factor to 0.

[Example of initializing the instantaneous maximum load factor]

Order	Loader Displays	Keys to Use	What to Do
1	Cn-00		Press [MODE] to display [Cn-00].
2	Cn-15		Press [UP] or [DOWN] to move to [Cn-15].
3	LdCLr		Press [SET] to enter instantaneous maximum load factor initialization.
4	15		Press [SET] and the current maximum load factor is displayed.
5	15 or -14		Press [UP] and the forward direction maximum load factor is displayed. Press [DOWN] and the reverse direction maximum load factor is displayed.
6	donE	or	Press [SET] and the instantaneous maximum load factor is reset. [Done] is displayed. If you press [MODE] and will not reset.
7	Cn-15		Press [MODE] for a second to return to [Cn-15].

※ "▯" indicates flickering.

5.2.17 Parameter Lock [Cn-16]

Lock or Unlock whole parameter.

[Example of locking or unlocking parameter]

Order	Loader Displays	Keys to Use	What to Do
1	Cn-00		Press [MODE] to display [Cn-00].
2	Cn-16		Press [UP] or [DOWN] to move to [Cn-16].
3	PLoCK		Press [SET] to enter parameter lock setting.
4	unLoK or LoCK		Press [UP] to unlock whole parameter. Press [DOWN] to lock whole parameter.
5	Cn-16		Hold down [MODE] for a second to return to [Cn-16].

※ "▯" indicates flickering.

5.2.18 Current Offset[Cn-17]

Store existing current offset value into [P0-27] ~ [P0-28] parameter.

[Example of setting current offset value]

Order	Loader Displays	Keys to Use	What to Do
1	Cn-00		Press [MODE] to display [Cn-00].
2	Cn-17		Press [UP] or [DOWN] to move to [Cn-17].
3	CALoF		Press [SET] to enter current offset value setting.
6	donE		Press [SET] to store U phase current offset value into [P0-27] and V phase current offset value into [P0-28].
7	Cn-17		Hold down [MODE] for a second to return to [Cn-17].

※ "▯" indicates flickering.

6 Communication Protocol

6.1 Overview and Communication Specifications

6.1.1 Overview

The XDL-L7 servo drive uses RS-422 serial communication. By connecting it to a PC or an upper level controller, you can test drive it or change gain tuning and parameters.

You can also operate or handle communication of up to 32 axes by connecting multiple XDL-L7 servo drives via a multi-drop method.

(1) Serial Communication Access through RS422

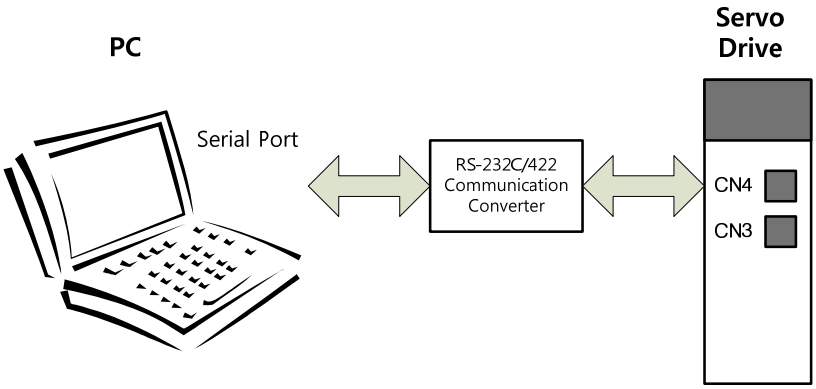

(2) Multi-Drop Access through RS422 (up to 32 machines)

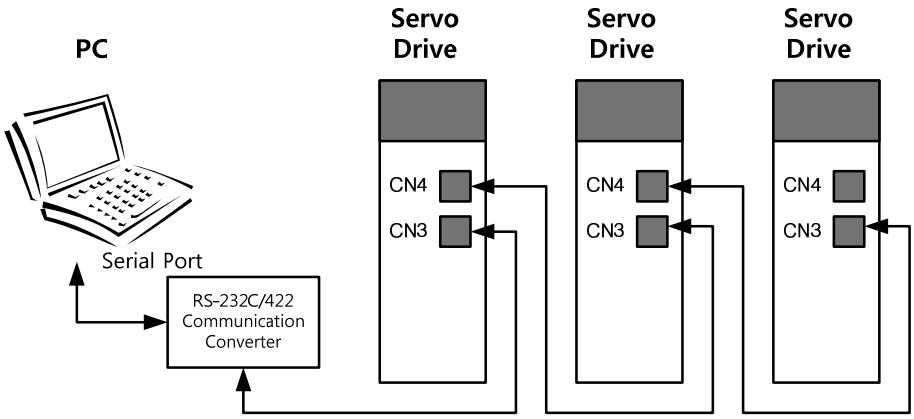

NOTE 1) When using a PC as the upper level controller, you have to use the RS232/RS485 communication converter.

The CN3 and the CN4 connector pins of the servo drive are connected on a one-to-one basis internally, making multi-drop wiring easy.

6.1.2 Communication Specifications and Cable Access Rate

(1) Communication Specifications

Item		Specifications
Communication standard		ANSI/TIA/EIA-422 standard
Communication protocol		MODBUS-RTU
Data Type	Data bit	8 bit
	Stop bit	1 bit
	Parity	None
Synchronous method		Asynchronous
Transmission speed		9600 /19200/38400/57600 [bps] [P0-04] can be selected.
Transmission distance		Up to 200 [m]
Current consumption		100 [㎃] or below

(2) Connection of CN3 and CN4 Connector Pins

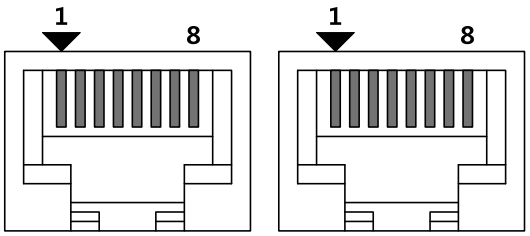

CN 3 CN 4

Pin Number	Pin Function
1	Not for use.
2	Terminating resistance connection note 1)
3	RXD+
4	TXD-
5	TXD+
6	RXD-
7	Not for use.
8	GND

NOTE 1) In case of multi access connection, apply terminating resistance by connecting Pin 2 of the last drive to Pin 6 (RXD-). Use 120Ω for terminal resistor

NOTE 2) Connect TXD+ and TXD-, and RXD+ and RXD- in twisted pairs.

NOTE 3) The TXD and RXD in the above table are based on the servo drive.

6.2 Communication Protocol Base Structure

The communication of the XDL-L7 servo drive complies with the international standard MODBUS-RTU protocol. For information about items not covered in this manual, refer to the following standard. (Related standard: Mudbugs application protocol specification 1.1b, 2006.12.28)

Also, the concept of sending and receiving in this manual is based on the host.

6.2.1 Sending/Receiving Packet Structure

The maximum sending/receiving packet length of the MODBUS-RTU protocol is 256 bytes. Make sure that the total length of the sending/receiving packet does not exceed 256 bytes.

The MODBUS-RTU communication mode requires space of at least 3.5 char between the end of the previous packet and the beginning of the next packet as show in the following image to distinguish packets.

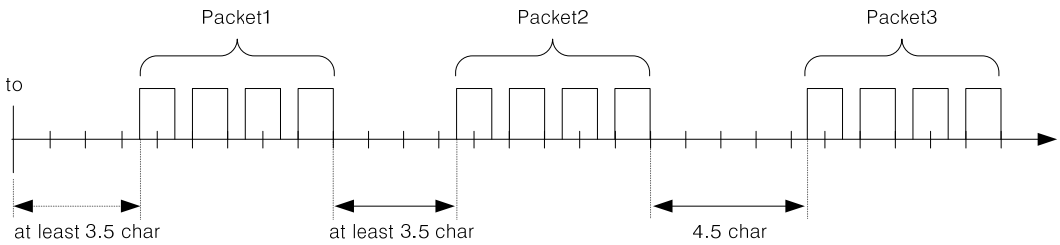

(1) Sending Packet Structure

	Additional Address	Function Code	Data			Error Check	
Bytes	**0**	**1**	**2**	**.**	**.**	**n-1**	**n**
Details	Node ID	Function	Data	.	.	CRC (MSB)	CRC (LSB)

(2) Receiving Packet Structure

[Normal Response]

	Additional Address	Function Code	Data			Error Check	
Bytes	**0**	**1**	**2**	**.**	**.**	**n-1**	**n**
Details	Node ID	Function	Data	.	.	CRC (MSB)	CRC (LSB)

[Abnormal Response]

	Additional Address	Function Code	Data	Error Check	
Bytes	**0**	**1**	**2**	**3**	**4**
Description	Node ID	Function+ 0x80	Exception code	CRC (MSB)	CRC (LSB)

(3) Protocol Packet Code

- Node ID

  Indicates the exchange number of the servo drive to send.

  Set the exchange number of the servo drive to [P0-05].

- Function Code

  The following are the Modbus-RTU standard function codes supported by the XDL-L7 servo drive.

- [Sending]

Category	Command Code	Details	Purpose	
			Read	Write
Public function code	0x03	Read single register	○	
	0x03	Read multi register	○	
	0x06	Write single register		○
	0x10	Write multi register		○
User defined function code	0x6A	Read each block register	○	

For read register commands, the Modbus address, the number of registers, and the number of bytes will be set. For write register commands, the Modbus address, the number of bytes, and other necessary values will be set.

[Receiving]

In the case of read register commands, normal responses are received with the same node ID and function code as they are sent. In terms of data, registers are received according to the order of sent registers.

In the case of write single register commands, the same data as those sent are received. In the case of write multi registers, the start address of the register, whose data were to be used with the write multi register command, and the number of registers are received.

Abnormal responses consist of node ID, error code, and exception code. The packet structure is the same for all abnormal responses regardless of their function codes.

(4) CRC

Enter the 16-bit CRC check sum. Send 1 byte of MSB and LSB each.

(5) Exception Code

The followings are the exception codes for all abnormal responses of all function codes supported in the XDL-L7 servo drive.

Exception Code	Description
0x01	Unsupported function codes
0x02	Invalid register address
0x03	Non-matching node IDs or CRC check errors
0x04	Command handling failure
0x05	Waiting(state of preparing data)
0x06	Locking(state of locking parameter)

6.2.2 Protocol Command Codes

(1) Read Single Register (0x03)

Read the single register (16-bit data) value.

Sending Packet		
Byte	**Content**	**Value**
0	Node ID	0x00
1	Function	0x03
2	Starting Address Hi	0x00
3	Starting Address Lo	0x6B
4	Quantity of Register Hi	0x00
5	Quantity of Register Lo	0x01
6	CRC Hi	
7	CRC Lo	

Normal Receiving Packet		
Byte	**Content**	**Value**
0	Node ID	0x00
1	Function	0x03
2	Byte Count	0x02
3	Register Value Hi	0x02
4	Register Value Lo	0x2B
5	CRC Hi	
6	CRC Lo	

Error Receiving Packet		
Byte	**Content**	**Value**
0	Node ID	0x00
1	Error Code	0x03 + 0x80
2	Exception Code	0x01 ~ 0x04
3	CRC Hi	
4	CRC Lo	

Example)

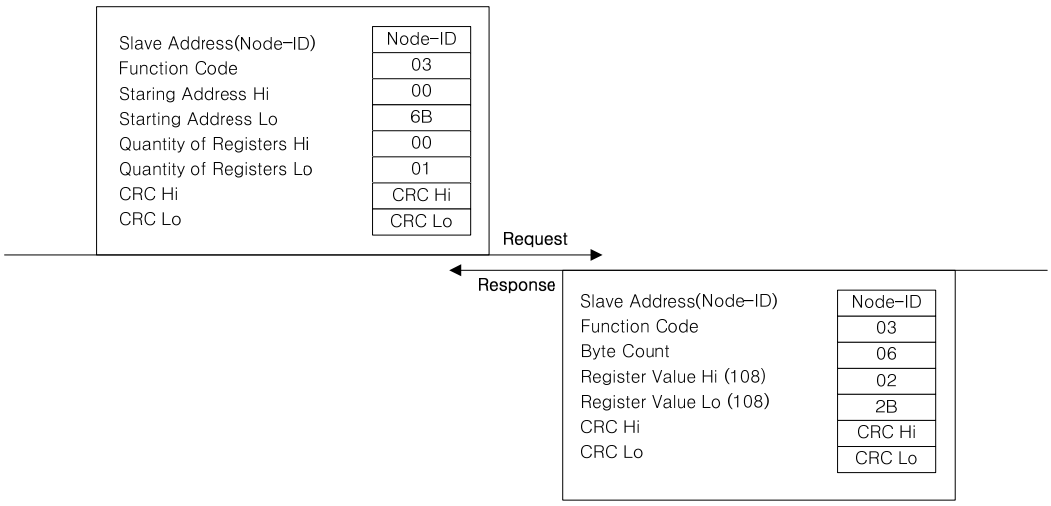

(2) Read Multi Register (0x03)

Read the continuous register block (16-bit data) value.

Sending Packet		
Byte	**Content**	**Value**
0	Node ID	0x00
1	Function	0x03
2	Starting Address Hi	0x00
3	Starting Address Lo	0x6B
4	Quantity of Register Hi	0x00
5	Quantity of Register Lo	0x03
6	CRC Hi	
7	CRC Lo	

Normal Receiving Packet		
Byte	**Content**	**Value**
0	Node ID	0x00
1	Function	0x03
2	Byte Count	0x06
3	Register Value Hi	0x02
4	Register Value Lo	0x2B
5	Register Value Hi	0x00
6	Register Value Lo	0x00
7	Register Value Hi	0x00
8	Register Value Lo	0x64
9	CRC Hi	.
10	CRC Lo	

Error Receiving Packet		
Byte	**Content**	**Value**
0	Node ID	0x00
1	Error Code	0x03 + 0x80
2	Exception Code	0x01 ~ 0x04
3	CRC Hi	
4	CRC Lo	

Example)

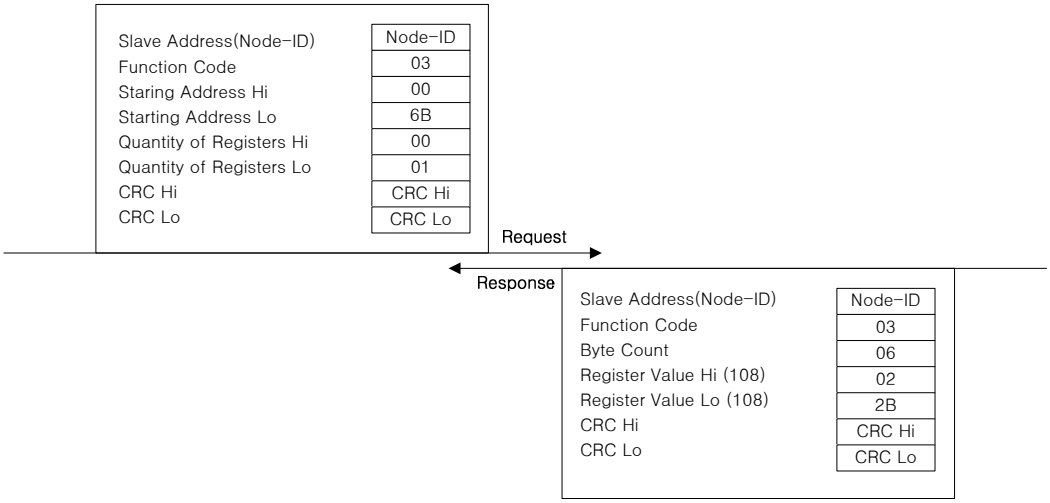

(3) Write Single Register (0x06)

Write values on the single register (16-bit data).

Sending Packet		
Byte	**Content**	**Value**
0	Node ID	0x00
1	Function	0x06
2	Register Address Hi	0x00
3	Register Address Lo	0x01
4	Register Value Hi	0x00
5	Register Value Lo	0x03
6	CRC Hi	
7	CRC Lo	

Normal Receiving Packet		
Byte	**Content**	**Value**
0	Node ID	0x00
1	Function	0x06
2	Register Address Hi	0x00
3	Register Address Lo	0x01
4	Register Value Hi	0x00
5	Register Value Lo	0x03
6	CRC Hi	
7	CRC Lo	

Error Receiving Packet		
Byte	**Content**	**Value**
0	Node ID	0x00
1	Error Code	0x06 + 0x80
2	Exception Code	0x01 ~ 0x06
3	CRC Hi	
4	CRC Lo	

Example)

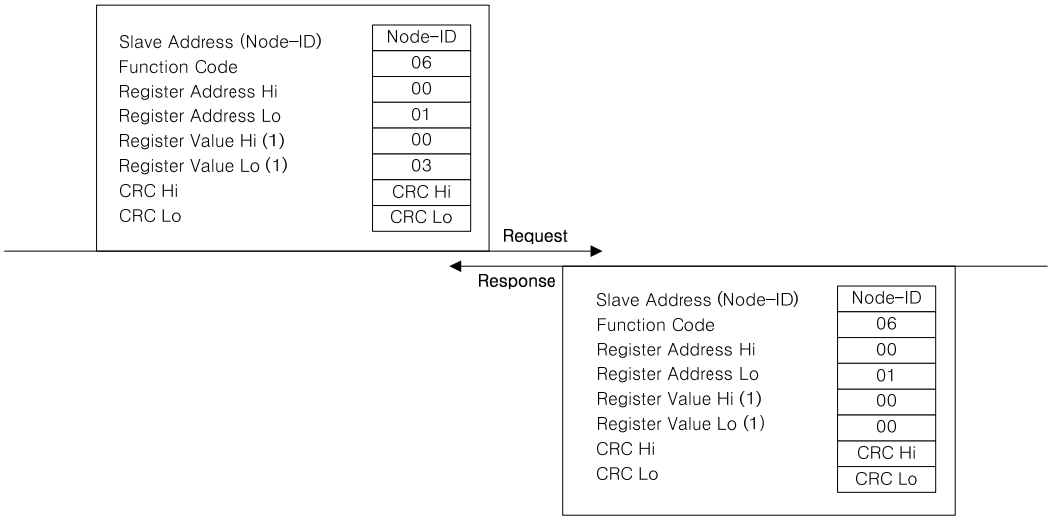

(4) Write Multi Register (0x10)

Writes values on the continuous register block (16-bit data).

Sending Packet		
Byte	**Content**	**Value**
0	Node ID	0x00
1	Function	0x10
2	Starting Address Hi	0x00
3	Starting Address Lo	0x01
4	Quantity of Registers Hi	0x00
5	Quantity of Registers Lo	0x02
6	Byte Count	0x04
7	Register Value Hi	0x00
8	Register Value Lo	0x0A
9	Register Value Hi	0x01
10	Register Value Lo	0x02
11	CRC Hi	
12	CRC Lo	

Normal Receiving Packet		
Byte	**Content**	**Value**
0	Node ID	0x00
1	Function	0x10
2	Starting Address Hi	0x00
3	Starting Address Lo	0x01
4	Quantity of Registers Hi	0x00
5	Quantity of Registers Lo	0x02
6	CRC Hi	
7	CRC Lo	

Error Receiving Packet		
Byte	**Content**	**Value**
0	Node ID	0x00
1	Error Code	0x10 + 0x80
2	Exception Code	0x01 ~ 0x04
3	CRC Hi	
4	CRC Lo	

Example)

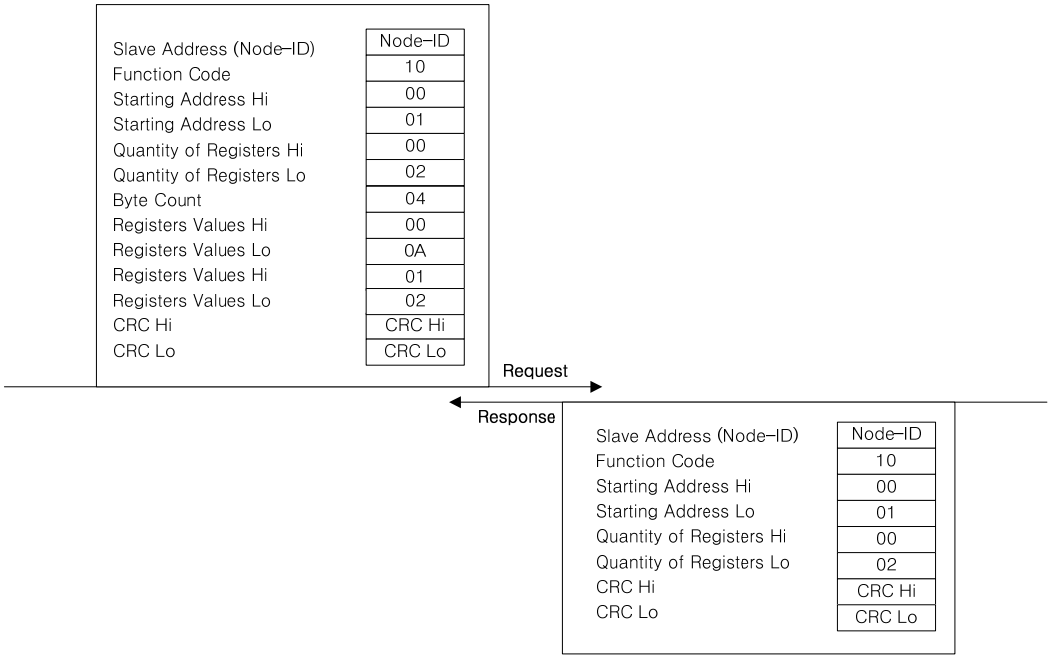

(5) Read Each Block Register (0x6A)

Read values on the discontinuous register block (16-bit data).

Sending Packet		
Byte	**Content**	**Value**
0	Node ID	0x00
1	Function	0x6A
2	Byte Count	0x06
3	Address Hi	0x00
4	Address Lo	0x01
5	Address Hi	0x00
6	Address Lo	0x04
7	Address Hi	0x00
8	Address Lo	0x08
9	CRC Hi	
10	CRC Lo	

Normal Receiving Packet		
Byte	**Content**	**Value**
0	Node ID	0x00
1	Function	0x6A
2	Byte Count	0x06
3	Register Value Hi	0x02
4	Register Value Lo	0x2B
5	Register Value Hi	0x00
6	Register Value Lo	0x00
7	Register Value Hi	0x00
8	Register Value Lo	0x64
9	CRC Hi	.
10	CRC Lo	

Error Receiving Packet		
Byte	**Content**	**Value**
0	Node ID	0x00
1	Error Code	0x6A + 0x80
2	Exception Code	0x01 ~ 0x04
3	CRC Hi	
4	CRC Lo	

Example)

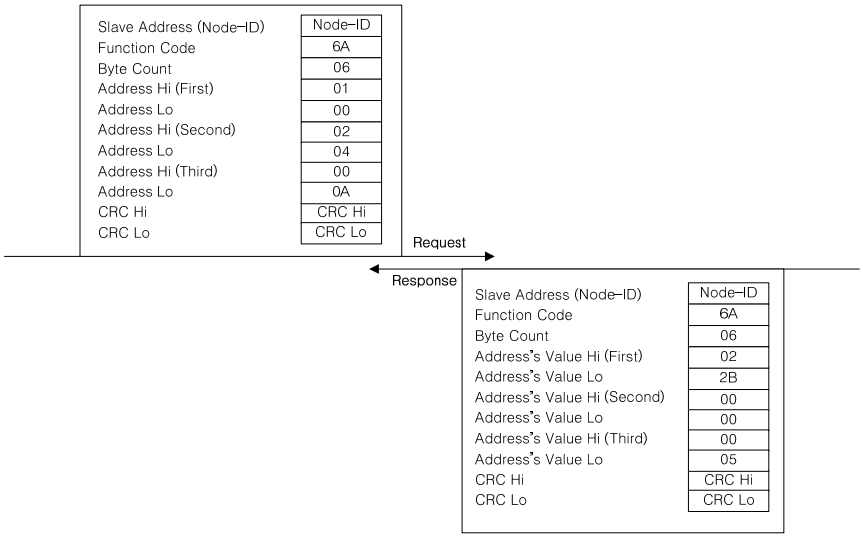

6.3 XDL-L7 Servo Drive Communication Address Table

6.3.1 Operation Status Parameter Communication Address Table

Communication Address (Decimal Number)	Parameter Name	Parameter Number	Material Type
	Operation Status Display Parameter		
0	Current operation status	St - 00	INT16 BIT0: Alarm BIT1: Servo on BIT2: Warning BIT3: CCW limit BIT4: CW limit BIT5: Zero speed BIT6: In speed BIT7: In position BIT8: Power ready BIT9: Analog command active BIT10 - BIT13: Control mode (0: Trq, 1: Spd, 2: Pos, 3: Spd/Pos, 4: Trq/Spd, 5: Trq/Pos)
2	Current operation speed	St - 01	INT16
4	Current command speed	St - 02	INT16
6	Tracking position pulse - L	St - 03	INT32
8	Tracking position pulse - H		
10	Position command pulse - L	St - 04	INT32
12	Position command pulse - H		
14	Remaining position pulse - L	St - 05	INT32
16	Remaining position pulse - H		
18	Input pulse frequency – L	St - 06	INT32
20	Input pulse frequency - H		
22	Current operation torque	St - 07	INT16
24	Current command torque	St - 08	INT16
26	Accumulated overload rate	St - 09	INT16
28	Instantaneous maximum load factor	St - 10	INT16
30	Torque limit value	St - 11	INT16
32	DC Link Voltage	St - 12	UINT16
34	Regenerative overload	St - 13	UINT16

Communication Address	Parameter Name	Parameter Number	Material Type
(Decimal Number)	Operation Status Display Parameter		
36	Input contact status	St - 14	UINT16
38	Output contact status	St - 15	UINT16
40	Single-turn data - L	St - 16	INT32
42	Single-turn data - H		
44	Single-turn data (degree)	St - 17	UINT16
46	Multi-turn data - L	St - 18	INT32
48	Multi-turn data - H		
50	Temperature in the servo drive	St - 19	INT16
52	Rated motor speed	St - 20	UINT16
54	Maximum motor speed	St - 21	UINT16
56	Rated motor current	St - 22	UINT16
58	Phase U current offset	St - 23	INT16
60	Phase V current offset	St - 24	INT16
62	Software version	St - 25	UINT16 BIT0-BIT4: Drive capacity (1: 100W, 2: 200W, 3: 400W, 4: 750W, 5: 1kW, 6: 3.5kW) BIT5-BIT14: Version number BIT 15: Encoder type (0: Quadrature, 1: Serial)
64	FPGA version	St - 26	UINT16
66	Analog torque command	St-27	INT16
68	Reserved		

6.3.2 System Parameter Communication Address Table

The following table lists Modbus communication addresses for the system parameter group [P0-xx].

Communication Address	Parameter Name	Parameter Number	Material Type
(Decimal Number)	System Parameter Parameter		
70	Motor ID	P0 - 00	UINT16
72	Encoder Type	P0 - 01	UINT16
74	Encoder pulse	P0 - 02	UINT16
76	Select operation mode	P0 - 03	UINT16
78	RS-422 communication speed	P0 - 04	UINT16
80	System ID	P0 - 05	UINT16
82	Main power input mode	P0 - 06	UINT16
84	RST checking time	P0 - 07	UINT16
86	Start-up display parameter	P0 - 08	UINT16
88	Regenerative overload derating	P0 - 09	UINT16
90	Regenerative resistance value	P0 - 10	UINT16
92	Regenerative resistance capacity	P0 - 11	UINT16
94	Overload detection base load factor	P0 - 12	UINT16
96	Continuous overload warning level	P0 - 13	UINT16
98	Encoder output pre-scale - L	P0 - 14	INT32
100	Encoder output pre-scale - H		
102	PWM OFF delay time	P0 - 15	UINT16
104	Dynamic brake control mode	P0 – 16	UINT16
106	Function setting bit	P0 - 17	UINT16
108	DAC output mode	P0 – 18	UINT16
110	DAC output offset 1	P0 - 19	INT16
112	DAC output offset 2	P0 - 20	INT16
114	Reserved	P0 – 21	
116	Reserved	P0 – 22	
118	DAC output scale 1	P0 – 23	UINT16
120	DAC output scale 2	P0 – 24	UINT16
122	Reserved	P0 – 25	
124	Reserved	P0 - 26	
126	U Phase Current Offset	P0 - 27	INT16
128	V Phase Current Offset	P0 - 28	INT16

Communication Address	Parameter Name	Parameter Number	Material Type
(Decimal Number)	System Parameter Parameter		
130	W Phase Current Offset	P0 - 29	INT16
132	Reserved		
134	Reserved		
136	Reserved		
138	Reserved		

6.3.3 Control Parameter Communication Address Table

The following table lists Modbus communication addresses for the control parameter group [P1-xx].

Communication Address	Parameter Name	Parameter Number	Material Type
(Decimal Number)	Control Parameter Parameter		
140	Inertia ratio	P1 - 00	UINT16
142	Position proportional gain 1	P1 - 01	UINT16
144	Position proportional gain 2	P1 - 02	UINT16
146	Position command filter time constant	P1 - 03	UINT16
148	Position feedforward gain	P1 - 04	UINT16
150	Position feedforward filter time constant	P1 - 05	UINT16
152	Speed proportional gain 1	P1 - 06	UINT16
154	Speed proportional gain 2	P1 - 07	UINT16
156	Speed integral time constant 1	P1 - 08	UINT16
158	Speed integral time constant 2	P1 - 09	UINT16
160	Speed command filter time constant	P1 - 10	UINT16
162	Speed feedback filter time constant	P1 - 11	UINT16
164	Torque command filter time constant	P1 - 12	UINT16
166	Forward rotation torque limit	P1 - 13	UINT16
168	Reverse rotation torque limit	P1 - 14	UINT16
170	Gain transfer mode	P1 - 15	UINT16
172	Gain transfer time	P1 - 16	UINT16
174	Resonance avoidance operation	P1 - 17	UINT16
176	Resonance avoidance frequency	P1 - 18	UINT16
178	Resonance avoidance range	P1 - 19	UINT16
180	Auto gain tuning speed	P1 - 20	UINT16
182	Auto gain tuning distance	P1 - 21	UINT16
184	Torque control speed limiting mode	P1 - 22	UINT16
186	Speed limit	P1 - 23	UINT16
188	Control P transfer torque	P1 - 24	UINT16
190	Control P transfer speed	P1 - 25	UINT16
192	Control P transfer acceleration	P1 - 26	UINT16
194	Control P transfer position error	P1 - 27	UINT16

Communication Address	Parameter Name	Parameter Number	Material Type
(Decimal Number)	Control Parameter Parameter		
196	Reserved		
198	Reserved		
200	Reserved		
202	Reserved		
204	Reserved		
206	Reserved		
208	Reserved		
210	Reserved		
212	Reserved		
214	Reserved		
216	Reserved		
218	Reserved		

6.3.4 Input/Output Parameter Communication Address Table

The following table lists Modbus communication addresses for the input/output parameter (analog and digital) parameter group [P2-xx].

Communication Address	Parameter Name	Parameter Number	Material Type
(Decimal Number)	Input/Output Parameter Parameter		
220	Input signal definition 1	P2 - 00	UINT16
222	Input signal definition 2	P2 - 01	UINT16
224	Input signal definition 3	P2 - 02	UINT16
226	Input signal definition 4	P2 - 03	UINT16
228	Input signal definition 5	P2 - 04	UINT16
230	Output signal definition 1	P2 - 05	UINT16
232	Output signal definition 2	P2 - 06	UINT16
234	Output signal definition 3	P2 - 07	UINT16
236	Input signal logic definition 1	P2 - 08	UINT16
238	Input signal logic definition 2	P2 - 09	UINT16
240	Output signal logic definition	P2 - 10	UINT16
242	Range of output for position reached	P2 - 11	UINT16
244	Zero speed output range	P2 - 12	UINT16
246	Range of output for speed reached	P2 - 13	UINT16
248	Brake output operation speed	P2 - 14	UINT16
250	Brake output delay time	P2 - 15	UINT16
252	Position pulse clear mode	P2 - 16	UINT16
254	Analog speed command scale	P2 - 17	UINT16
256	Analog speed command offset	P2 - 18	INT16
258	Zero speed clamp speed	P2 - 19	UINT16
260	Analog torque command scale	P2 - 20	UINT16
262	Analog torque command offset	P2 - 21	INT16
264	Zero speed clamp voltage	P2 - 22	UINT16
266	Reserved		
268	Reserved		
270	Reserved		
272	Reserved		
274	Reserved		
276	Reserved		
278	Reserved		

6.3.5 Speed Operation Parameter Communication Address Table

The following table lists Modbus communication addresses for the speed operation parameter group [P3-xx].

Communication Address	Parameter Name	Parameter Number	Material Type
(Decimal Number)	Input/Output Parameter Parameter		
280	Digital speed command 1	P3 - 00	INT16
282	Digital speed command 2	P3 - 01	INT16
284	Digital speed command 3	P3 - 02	INT16
286	Digital speed command 4	P3 - 03	INT16
288	Digital speed command 5	P3 - 04	INT16
290	Digital speed command 6	P3 - 05	INT16
292	Digital speed command 7	P3 - 06	INT16
294	Z search operation speed setting	P3 - 07	UINT16
296	Speed command acceleration time	P3 - 08	UINT16
298	Speed command deceleration time	P3 - 09	UINT16
300	Speed command S-Curve time	P3 - 10	UINT16
302	Speed operation pattern	P3 - 11	UINT16
304	Manual JOG operation speed	P3 - 12	INT16
306	Program JOG operation speed 1	P3 - 13	INT16
308	Program JOG operation speed 2	P3 - 14	INT16
310	Program JOG operation speed 3	P3 - 15	INT16
312	Program JOG operation speed 4	P3 - 16	INT16
314	Program JOG operation time 1	P3 - 17	UINT16
316	Program JOG operation time 2	P3 - 18	UINT16
318	Program JOG operation time 3	P3 - 19	UINT16
320	Program JOG operation time 4	P3 - 20	UINT16
322	Reserved		
324	Reserved		
326	Reserved		
328	Reserved		

6.3.6 Position Operation Parameter Communication Address Table

The following table lists Modbus communication addresses for the position operation parameter group [P4-xx].

Communication Address	Parameter Name	Parameter Number	Material Type
(Decimal Number)	Position operation Parameter		
330	Position input pulse logic	P4 - 00	UINT16
332	Electronic gear ratio numerator 1 – L	P4 - 01	INT32
334	Electronic gear ratio numerator 1 – H		
336	Electronic gear ratio numerator 2 – L	P4 - 02	INT32
338	Electronic gear ratio numerator 2 – H		
340	Electronic gear ratio numerator 3 – L	P4 - 03	INT32
342	Electronic gear ratio numerator 3 – H		
344	Electronic gear ratio numerator 4 – L	P4 - 04	INT32
346	Electronic gear ratio numerator 4 - H		
348	Electronic gear ratio denominator 1	P4 - 05	UINT16
350	Electronic gear ratio denominator 2	P4 - 06	UINT16
352	Electronic gear ratio denominator 3	P4 – 07	UINT16
354	Electronic gear ratio denominator 4	P4 - 08	UINT16
356	Electronic gear ratio mode	P4 – 09	UINT16
358	Electronic gear ratio numerator offset	P4 - 10	UINT16
360	Position error range - L	P4 - 11	INT32
362	Position error range- H		
364	Limit contact function	P4 – 12	UINT16
366	Backlash compensation	P4 - 13	UINT16
368	Pulse input filter	P4 – 14	UINT16

7 Product Specifications

7.1 Servo Motor

■ Heat Sink Specifications

Type	Dimensions(mm)	Materials
AP04	250x250x6	Aluminum
AP06	250x250x6	
AP08	250x250x12	
AP13	350x350x20	
AP18	550x550x30	
AP22	650x650x35	

NOTE 1) The data on the product features is measured when those heat sinks are applied.

7.1.1 Product Features

Servo Motor Type (XML-□□□□□)		SAR3A	SAR5A	SA01A	SA015A
Applicable Drive (XDL-L7□A□□)		XDL-L7□A001			XDL-L7□A002
Rated output	[kW]	0.03	0.05	0.10	0.15
Rated torque	[N·m]	0.10	0.16	0.32	0.48
	[kgf·cm]	0.97	1.62	3.25	4.87
Maximum instantaneous torque	[N·m]	0.29	0.48	0.96	1.43
	[kgf·cm]	2.92	4.87	9.74	14.62
Rated current	[A]	1.07	1.20	1.38	1.73
Maximum current	[A]	3.21	3.60	4.14	5.19
Rated rotation speed	[r/min]	3000			
Maximum rotation speed	[r/min]	5000			
Inertia moment	[kg·m2x10-4]	0.0164	0.02	0.05	0.06
	[gf·cm·s2]	0.0167	0.02	0.05	0.07
Allowed load inertia		Motor inertia x 30			Motor inertia x 20
Rated power rate	[kW/s]	5.56	10.55	23.78	35.34
Speed and position detector	Standard	Quad. Type Incremental 2048[P/R]			
	Option	Serial Type(coming soon)			
Specifications and features	Protection method	Fully closed·self-cooling IP55(excluding axis penetration)			
	Time rating	Continuous			
	Ambient temperature	0~40[°C]			
	Ambient humidity	20~80[%]RH (no condensation)			
	Atmosphere	No direct sunlight, corrosive gas, or combustible gas			
	Anti-vibration	Vibration acceleration of 49[m/s2](5G)			
Weight	[kg]	0.3	0.4	0.5	0.7

♦Rotation Speed – Torque Characteristics♦

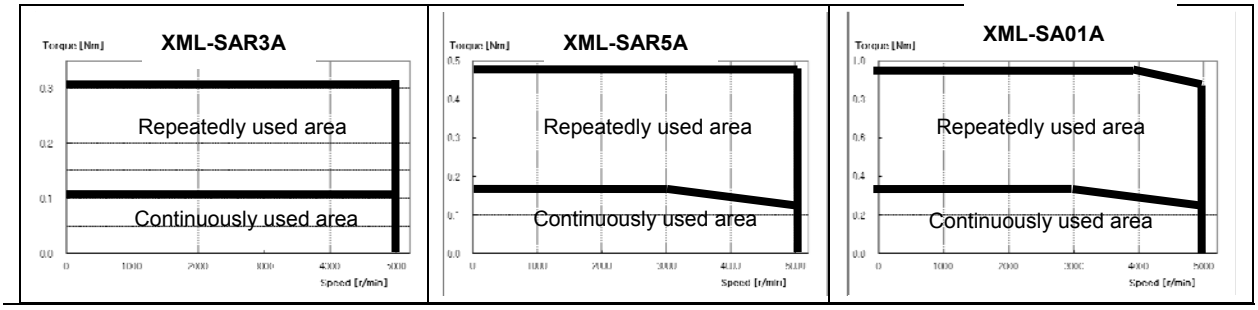

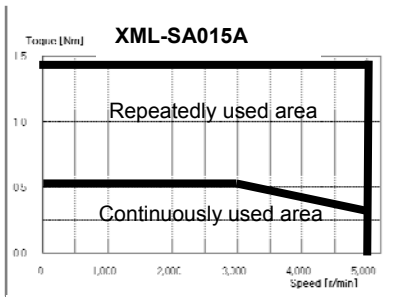

■ Product Features

Servo Drive Type (XML-□□□□□)		SB01A	SB02A	SB04A		
Applicable Drive (XDL-L7□A□□)		XDL-L7□A002		XDL-L7□A004		
Rated output	[kW]	0.10	0.20	0.40		
Rated torque	[N·m]	0.32	0.64	1.27		
	[kgf·cm]	3.25	6.49	12.99		
Maximum instantaneous torque	[N·m]	0.96	1.91	3.82		
	[kgf·cm]	9.74	19.48	38.96		
Rated current	[A]	1.65	1.63	2.89		
Maximum current	[A]	4.95	4.89	8.67		
Rated rotation speed	[r/min]	3000				
Maximum rotation speed	[r/min]	5000				
Inertia moment	[kg·m2x10-4]	0.11	0.18	0.32		
	[gf·cm·s2]	0.12	0.19	0.33		
Allowed load inertia		Motor inertia x 20				
Rated power rate	[kW/s]	8.89	22.26	50.49		
Speed and position detector	Standard	Quad. Type Incremental 3000[P/R]				
	Option	Serial Type 19[Bit]				
Specifications and features	Protection method	Fully closed·self-cooling IP65(excluding axis penetration)				
	Time rating	Continuous				
	Ambient temperature	0~40[°C]				
	Ambient humidity	20~80[%]RH (no condensation)				
	Atmosphere	No direct sunlight, corrosive gas, or combustible gas				
	Anti-vibration	Vibration acceleration 49[m/s2](5G)				
Weight	[kg]	0.8	1.1	1.6		

♦Rotation speed – Torque Characteristics♦

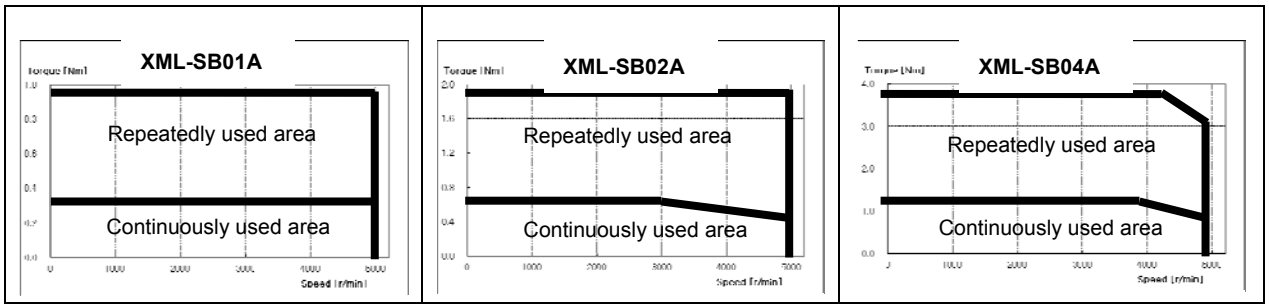

■ Product Features

Servo Motor Type (XML-□□□□□)		SBN01A	SBN02A	SBN04A	SBN04A-BK		
Applicable drive (XDL-L7□A□□)		XDL-L7□A002		XDL-L7□A004			
Rated output	[kW]	0.1	0.2	0.4	0.4		
Rated torque	[N·m]	0.32	0.64	1.27	1.27		
	[kgf·cm]	3.25	6.49	12.99	12.99		
Maximum instantaneous torque	[N·m]	0.95	1.91	3.82	3.82		
	[kgf·cm]	9.74	19.48	38.96	38.96		
Rated current	[A]	1.58	1.50	3.00	2.73		
Maximum current	[A]	4.74	4.50	9.00	8.19		
Rated rotation speed	[r/min]	3000					
Maximum rotation speed	[r/min]	5000					
Inertia moment	[kg·m2x10-4]	0.11	0.18	0.32	0.25		
	[gf·cm·s2]	0.12	0.19	0.33	0.26		
Allowed load inertia		Motor inertia x 20					
Rated power rate	[kW/s]	8.91	22.22	50.41	63.84		
Speed and position detector	Standard	Quad. Type Incremental 3000[P/R]					
	Option	Serial Type 19[Bit]					
Specifications and features	Protection method	Fully closed·self-cooling IP55(excluding axis penetration)					
	Time rating	Continuous					
	Ambient temperature	0~40[°C]					
	Ambient humidity	20~80[%]RH (no condensation)					
	Atmosphere	No direct sunlight, corrosive gas, or combustible gas					
	Anti-vibration	Vibration acceleration of 49[m/s2](5G)					
Weight	[kg]	0.8	1.1	1.6	1.6		

♦Rotation speed – Torque Characteristics♦

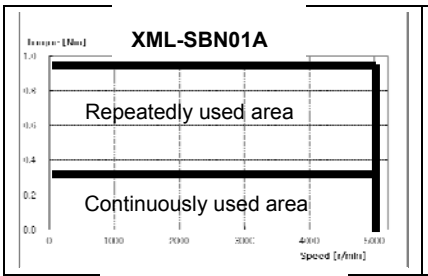

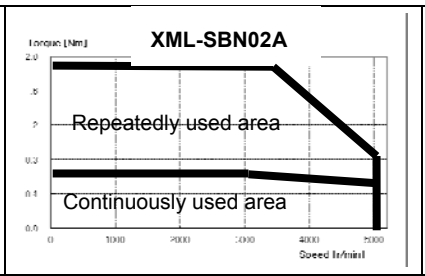

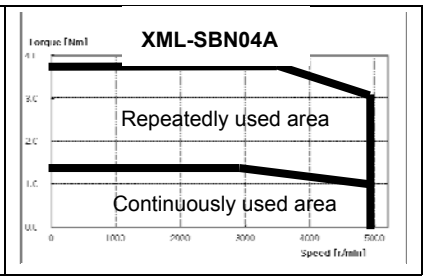

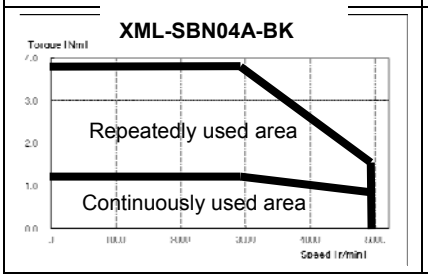

■ Product Features

Servo Motor Type (XML-□□□□□)		SC04A	SC06A	SC08A	SC10A		
Applicable drive (XDL-L7□A□□)		XDL-L7□A004	XDL-L7□A008		XDL-L7□A010		
Rated output	[kW]	0.4	0.6	0.8	1.0		
Rated torque	[N·m]	1.27	1.91	2.55	3.19		
	[kgf·cm]	12.99	19.49	25.98	32.48		
Maximum instantaneous torque	[N·m]	3.82	5.73	7.64	9.56		
	[kgf·cm]	38.96	58.47	77.95	97.43		
Rated current	[A]	2.82	3.58	4.83	5.37		
Maximum current	[A]	8.46	10.74	14.49	16.11		
Rated rotation speed	[r/min]	3000					
Maximum rotation speed	[r/min]	5000					
Inertia moment	[kg·m2x10-4]	0.67	1.09	1.51	1.93		
	[gf·cm·s2]	0.69	1.11	1.54	1.97		
Allowed load inertia		Motor inertia x 15					
Rated power rate	[kW/s]	24.05	33.39	43.02	52.57		
Speed and position detector	Standard	Quadrature Type Incremental 3000[P/R]					
	Option	Serial Type 19[bit]					
Specifications and features	Protection method	Fully closed·self-cooling IP65(excluding axis penetration)					
	Time rating	Continuous					
	Ambient temperature	0~40[°C]					
	Ambient humidity	20~80[%]RH (no condensation)					
	Atmosphere	No direct sunlight, corrosive gas, or combustible gas					
	Anti-vibration	Vibration acceleration 49[m/s2](5G)					
Weight	[kg]	1.9	2.5	3.2	3.8		

♦Rotation speed – Torque Characteristics♦

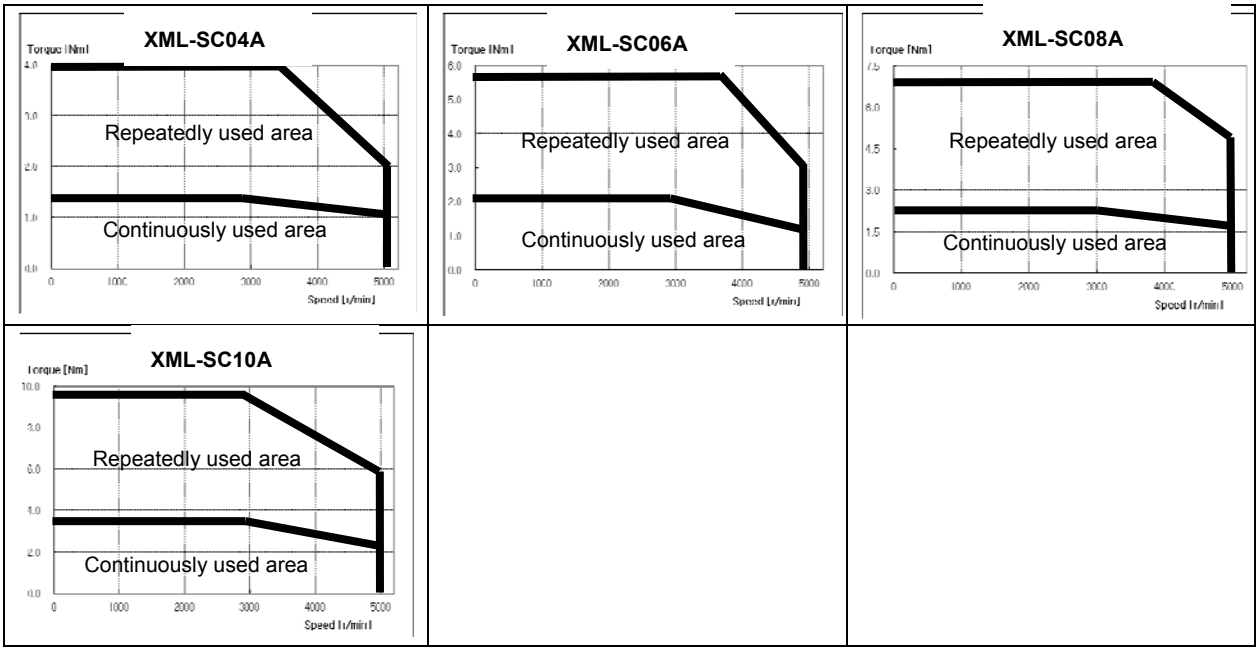

■ Product Features

Servo Motor Type (XML-□□□□□)		SC03D	SC05D	SC06D	SC07D		
Applicable drive (XDL-L7□A□□)		XDL-L7□A004	XDL-L7□A008				
Rated output	[kW]	0.30	0.45	0.55	0.65		
Rated torque	[N·m]	1.43	2.15	2.63	3.10		
	[kgf·cm]	14.61	21.92	26.79	31.66		
Maximum instantaneous torque	[N·m]	4.30	6.45	7.88	9.31		
	[kgf·cm]	43.84	65.77	80.38	94.99		
Rated current	[A]	2.59	3.23	3.82	4.42		
Maximum current	[A]	7.77	9.69	11.46	13.26		
Rated rotation speed	[r/min]	2000					
Maximum rotation speed	[r/min]	3000					
Inertia moment	[kg·m2x10-4]	0.67	1.09	1.51	1.93		
	[gf·cm·s2]	0.69	1.11	1.54	1.97		
Allowed load inertia		Motor inertia x 15					
Rated power rate	[kW/s]	30.43	42.27	45.69	49.97		
Speed and position detector	Standard	Quadrature Type Incremental 3000[P/R]					
	Option	Serial Type 19[bit]					
Specifications and features	Protection method	Fully closed·self-cooling IP65(excluding axis penetration)					
	Time rating	Continuous					
	Ambient temperature	0~40[°C]					
	Ambient humidity	20~80[%]RH (no condensation)					

	Atmosphere	No direct sunlight, corrosive gas, or combustible gas.					
	Anti-vibration	Vibration acceleration 49[m/s2](5G)					
Weight	[kg]	1.9	2.5	3.2	3.9		

♦ Rotation speed – Torque Characteristics ♦

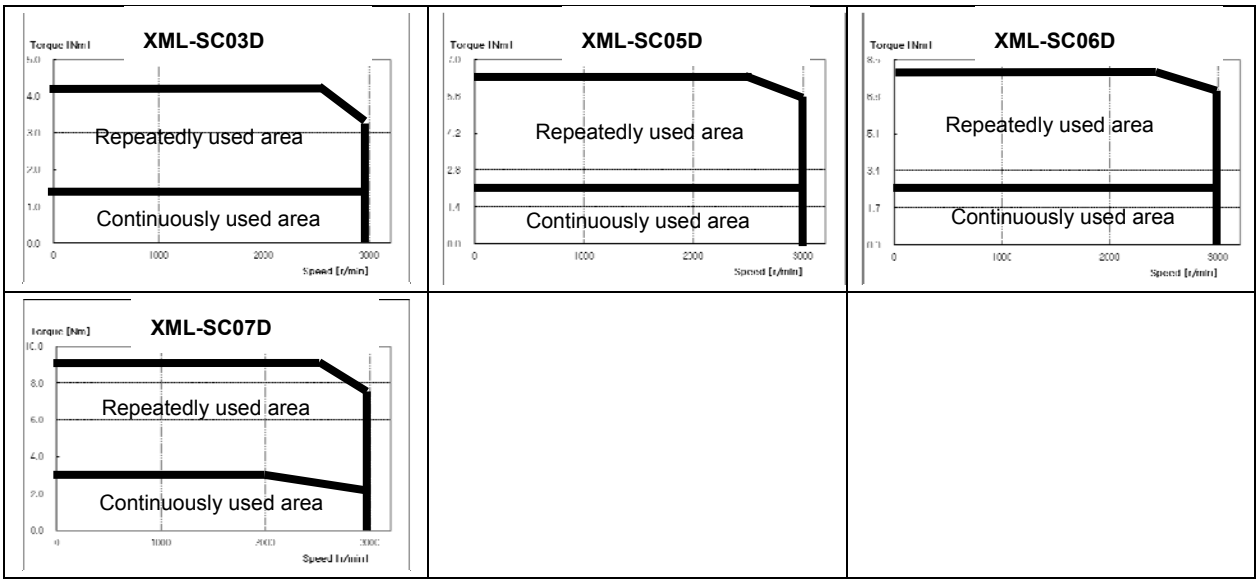

■ Product Features

Servo Motor Type (XML-□□□□□)		SE09A	SE15A	SE22A	SE30A	SE06D	SE11D
Applicable drive (XDL-L7□A□□)		XDL-L7□A008	XDL-L7□A020		XDL-L7□A035	XDL-L7□A008	XDL-L7□A010
Rated output	[kW]	0.9	1.5	2.2	3.0	0.6	1.1
Rated torque	[N·m]	2.86	4.77	7.00	9.55	2.86	5.25
	[kgf·cm]	29.23	48.72	71.45	97.43	29.23	53.59
Maximum instantaneous torque	[N·m]	8.59	14.32	21.01	28.64	8.59	15.75
	[kgf·cm]	87.69	146.15	214.35	292.29	87.69	160.76
Rated current	[A]	4.95	8.23	11.98	17.16	3.97	6.28
Maximum current	[A]	14.85	24.69	35.94	51.48	11.91	18.84
Rated rotation speed	[r/min]	3000				2000	
Maximum rotation speed	[r/min]	5000				3000	
Inertia moment	[kg·m2x10-4]	6.66	12.00	17.34	22.68	6.66	12.00
	[gf·cm·s2]	6.80	12.24	17.69	23.14	6.80	12.24
Allowed load inertia		Motor inertia x 10					
Rated power rate	[kW/s]	12.32	18.99	28.28	40.20	12.32	22.98
Speed and position detector	Standard	Quadrature Type Incremental 3000[P/R]					
	Option	Serial Type 19[bit]					
Specifications and features	Protection method	Fully closed·self-cooling IP65(excluding axis penetration)					
	Time rating	Continuous					
	Ambient temperature	0~40[°C]					

	Ambient humidity	20~80[%]RH(no condensation)					
	Atmosphere	No direct sunlight, corrosive gas, or combustible gas					
	Anti-vibration	Vibration acceleration 49[m/s2](5G)					
Weight	[kg]	5.5	7.5	9.7	11.8	5.5	7.5

♦ Rotation speed – Torque Characteristics ♦

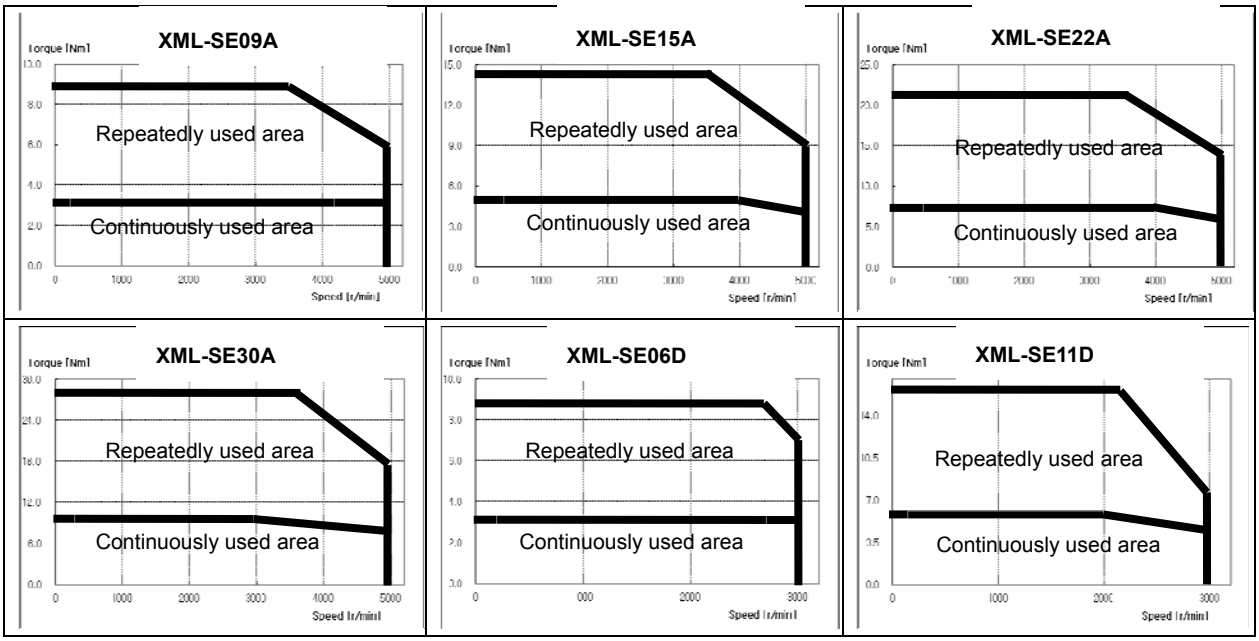

■ Product Features

Servo Motor Type (XML-□□□□□)		SE16D	SE22D	SE03M	SE06M	SE09M	SE12M
Applicable drive (XDL-L7□A□□)		XDL-L7□A020		XDL-L7□A004	XDL-L7□A008	XDL-L7□A010	XDL-L7□A020
Rated output	[kW]	1.6	2.2	0.3	0.6	0.9	1.2
Rated torque	[N·m]	7.64	10.50	2.86	5.73	8.59	11.46
	[kgf·cm]	77.94	107.17	29.23	58.46	87.69	116.92
Maximum instantaneous torque	[N·m]	22.92	31.51	8.59	17.19	25.78	34.37
	[kgf·cm]	233.83	321.52	87.69	175.30	263.06	350.75
Rated current	[A]	9.23	12.37	2.51	4.15	5.78	7.63
Maximum current	[A]	27.69	37.11	7.53	12.45	17.34	22.89
Rated rotation speed	[r/min]	2000		1000			
Maximum rotation speed	[r/min]	3000		2000			
Inertia moment	[kg·m2x10-4]	17.34	22.68	6.66	12.00	17.34	22.68
	[gf·cm·s2]	17.69	23.14	6.80	12.24	17.69	23.14
Allowed load inertia		Motor inertia x 10					
Rated power rate	[kW/s]	33.65	48.64	12.32	27.35	42.59	57.89
Speed and position detector	Standard	Quadrature Type Incremental 3000[P/R]					
	Option	Serial Type 19[bit]					
Specifications and features	Protection Method	Fully closed·self-cooling IP65(excluding axis penetration)					

	Time rating	Continuous					
	Ambient temperature	0~40[°C]					
	Ambient humidity	20~80[%]RH(no condensation)					
	Atmosphere	No direct sunlight, corrosive gas, or combustible gas					
	Anti-vibration	Vibration acceleration 49[m/s2](5G)					
Weight	[kg]	9.7	11.8	5.5	7.5	9.7	11.8

♦ Rotation speed – Torque Characteristics ♦

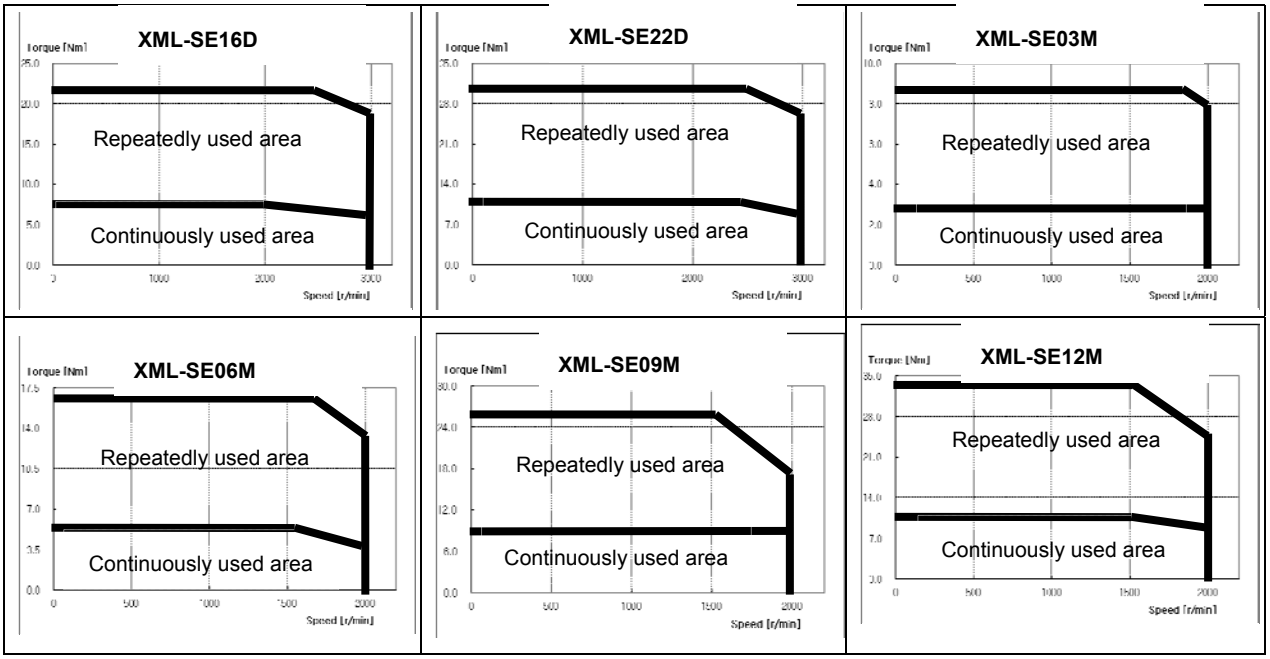

■ Product Features

Servo Motor Type (XML-□□□□□)		SE05G	SE09G	SE13G	SE17G	SF30A	SF50A
Applicable drive (XDL-L7□A□□)		XDL-L7□A008	XDL-L7□A010	XDL-L7□A020		XDL-L7□A035	XDL-L7□A050
Rated output	[kW]	0.45	0.85	1.3	1.7	3.0	5.0
Rated torque	[N·m]	2.86	5.41	8.28	10.82	9.55	15.91
	[kgf·cm]	29.23	55.21	84.44	110.42	97.43	162.38
Maximum instantaneous torque	[N·m]	8.59	16.23	24.83	32.46	28.64	47.74
	[kgf·cm]	87.69	165.63	253.32	331.26	292.29	487.15
Rated current	[A]	3.97	6.47	10.00	12.75	16.70	27.40
Maximum current	[A]	11.91	19.41	30.00	38.25	50.1	82.20
Rated rotation speed	[r/min]	1500				3000	
Maximum rotation speed	[r/min]	3000				5000	
Inertia moment	[kg·m2x10-4]	6.66	12.00	17.34	22.68	30.74	52.13
	[gf·cm·s2]	6.80	12.24	17.69	23.14	31.37	53.19
Allowed load inertia		Motor inertia x 10				Motor inertia x 5	
Rated power rate	[kW/s]	12.32	24.40	39.49	51.63	29.66	48.58

Speed and position detector	Standard	Quadrature Type Incremental 3000[P/R]					
	Option	Serial Type 19[bit]					
Specifications and features	Protection method	Fully closed·self-cooling IP65(excluding axis penetration)					
	Time rating	Continuous					
	Ambient temperature	0~40[°C]					
	Ambient humidity	20~80[%]RH(no condensation)					
	Atmosphere	No direct sunlight, corrosive gas, or combustible gas					
	Anti-vibration	Vibration acceleration 49[m/s2](5G)					
Weight	[kg]	5.5	7.5	9.7	11.8	12.4	17.7

♦ Rotation speed – Torque Characteristics ♦

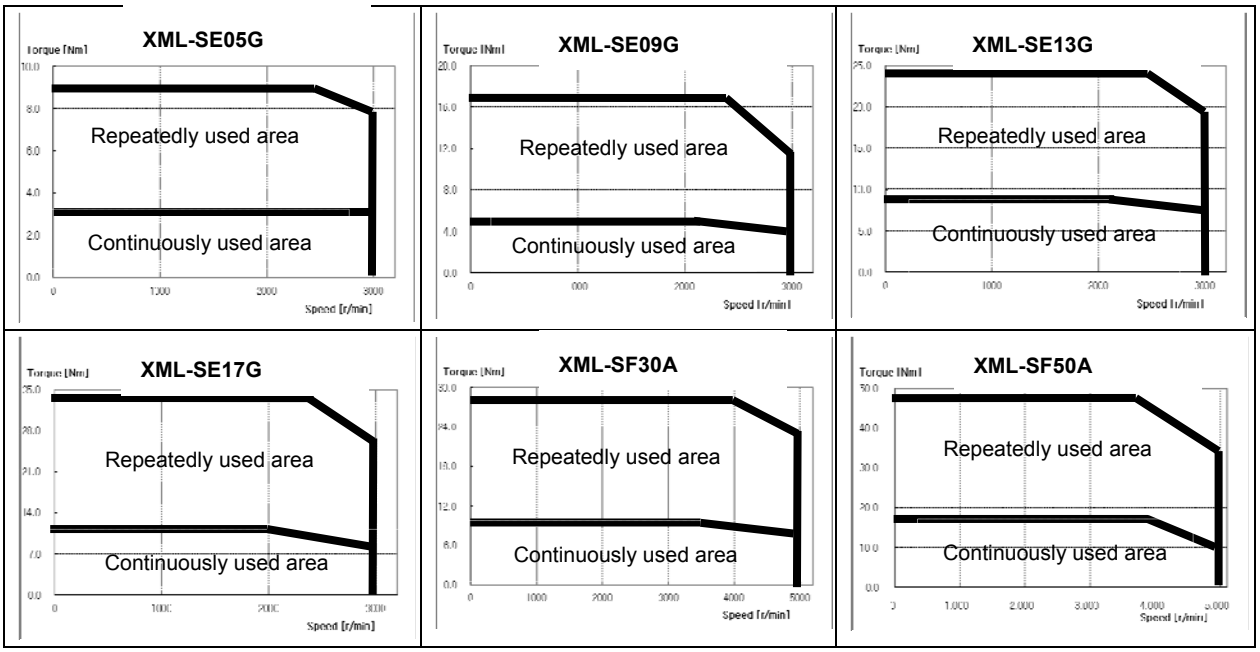

■ Product Features

Servo Motor Type (XML-□□□□□)		SF22D	LF35D	SF55D	SF20G	LF30G	SF44G
Applicable drive (XDL-L7□A□□)		XDL-L7□A020	XDL-L7□A035	XDL-L7□A050	XDL-L7□A035		XDL-L7□A050
Rated output	[kW]	2.2	3.5	5.5	1.8	2.9	4.4
Rated torque	[N·m]	10.50	16.71	26.26	11.46	18.46	28.01
	[kgf·cm]	107.17	170.50	267.93	116.92	188.37	285.80
Maximum instantaneous torque	[N·m]	31.51	50.13	78.77	34.37	55.38	84.02
	[kgf·cm]	321.52	511.51	803.80	350.75	565.10	857.39
Rated current	[A]	13.50	15.85	30.25	14.7	15.92	31.75
Maximum current	[A]	40.50	47.55	90.75	44.1	47.64	95.25
Rated rotation speed	[r/min]	2000			1500		
Maximum rotation speed	[r/min]	3000			3000	2700	3000
Inertia moment	[kg·m2x10-4]	30.74	52.13	85.31	30.74	52.13	83.60

	[gf·cm·s2]	31.35	53.16	83.60	31.37	53.19	85.31
Allowed load inertia		Motor inertia x 5					
Rated power rate	[kW/s]	35.88	53.56	82.47	42.71	65.37	93.83
Speed and position detector	Standard	Quadrature Type Incremental 3000[P/R]					
	Option	Serial Type 19[bit]					
Specifications and features	Protection method	Fully closed·self-cooling IP65(excluding axis penetration)					
	Time rating	Continuous					
	Ambient temperature	0~40[°C]					
	Ambient humidity	20~80[%]RH(no condensation)					
	Atmosphere	No direct sunlight, corrosive gas, or combustible gas					
	Anti-vibration	Vibration acceleration 49[m/s2](5G)					
Weight	[kg]	12.4	17.7	26.3	12.4	17.7	26.3

♦ Rotation speed – Torque Characteristics ♦

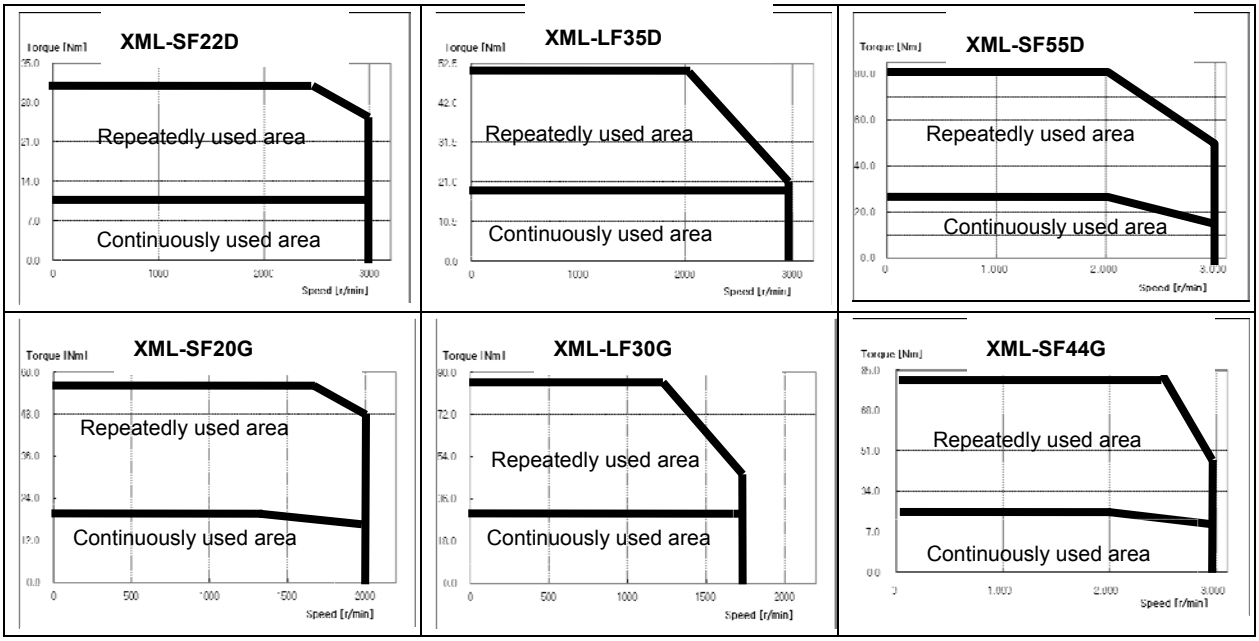

■ Product Features

Servo Motor Type (XML-□□□□□)		SF12M	SF20M	LF30M	SF44M		
Applicable drive (XDL-L7□A□□)		XDL-L7□A020	XDL-L7□A035		XDL-L7□A050		
Rated output	[kW]	1.2	2.0	3.0	4.4		
Rated torque	[N·m]	11.46	19.10	28.64	42.01		
	[kgf·cm]	116.92	194.86	292.29	428.69		
Maximum instantaneous torque	[N·m]	34.37	57.29	85.93	126.04		
	[kgf·cm]	350.75	584.58	876.88	1286.08		
Rated current	[A]	8.40	14.40	15.99	31.24		
Maximum current	[A]	25.2	43.2	47.97	93.72		

Rated rotation speed	[r/min]	1000					
Maximum rotation speed	[r/min]	2000		1700	2000		
Inertia moment	[kg·m2x10-4]	30.74	52.13	83.60	121.35		
	[gf·cm·s2]	31.37	53.19	85.31	123.83		
Allowed load inertia		Motor inertia x 5					
Rated power rate	[kW/s]	42.71	69.95	98.15	145.45		
Speed and position detector	Standard	Quadrature Type Incremental 3000[P/R]					
	Option	Serial Type 19[bit]					
Specifications and features	Protection method	Fully closed·self-cooling IP65(excluding axis penetration)					
	Time rating	Continuous					
	Ambient temperature	0~40[°C]					
	Ambient humidity	20~80[%]RH(no condensation)					
	Atmosphere	No direct sunlight, corrosive gas, or combustible gas					
	Anti-vibration	Vibration acceleration 49[m/s2](5G)					
Weight	[kg]	12.4	17.7	26.3	35.6		

♦ Rotation Speed - Torque Characteristics ♦

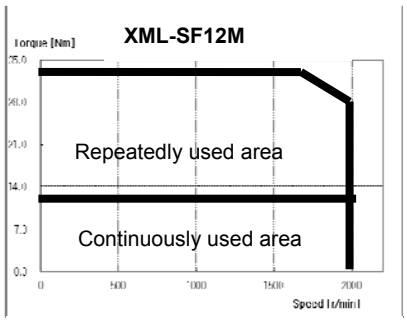

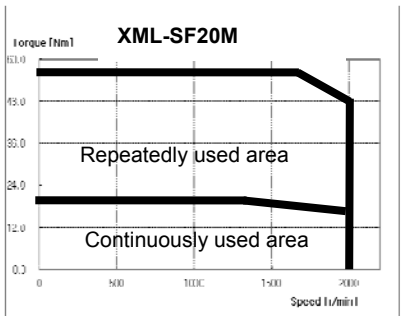

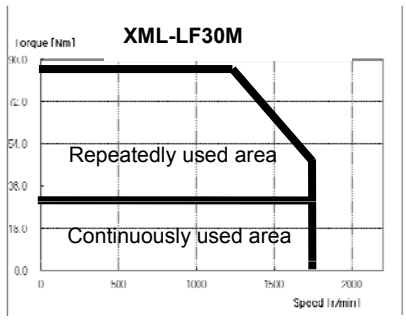

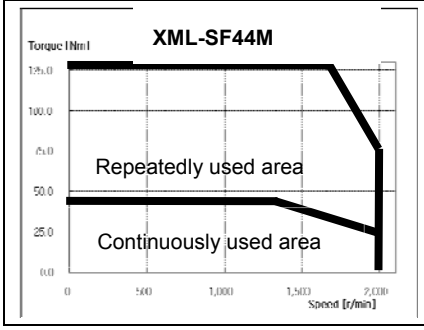

■ Product Features

Servo Motor Type (XML-□□□□□)		SG20G	LG30G	SG44G	SG22D	LG35D	SG55D
Applicable drive (XDL-L7□A□□)		XDL-L7□A020	XDL-L7□A035	XDL-L7□A050	XDL-L7□A020	XDL-L7□A035	XDL-L7□A050
Rated output	1.8	1.8	2.9	4.4	2.2	3.5	5.5
Rated torque	11.46	11.46	18.46	28.01	10.50	16.71	26.26
	116.92	116.92	188.37	285.80	107.20	170.52	267.9
Maximum instantaneous torque	34.47	34.47	55.38	84.02	31.51	50.13	78.77
	350.80	350.80	565.10	857.39	321.52	511.51	803.8
Rated current	[A]	13.10	16.19	31.50	12.30	16.05	30.25
Maximum current	[A]	39.3	48.57	94.5	36.9	48.15	90.75
Rated rotation speed	[r/min]	1500			2000		
Maximum rotation speed	[r/min]	3000	2700	3000	3000		
Inertia moment	[kg·m2x10-4]	51.42	80.35	132.41	51.42	80.35	135.11
	[gf·cm·s2]	52.47	81.99	135.11	52.47	81.99	132.41
Allowed load inertia		Motor inertia x 5					
Rated power rate	[kW/s]	25.53	42.41	59.24	21.45	34.75	52.07
Speed and position detector	Standard	Quadrature Type Incremental 3000[P/R]					
	Option	Serial Type 19[bit]					
Specifications and features	Protection method	Fully closed·self-cooling IP65(excluding axis penetration)					
	Time rating	Continuous					
	Ambient temperature	0~40[°C]					
	Ambient humidity	20~80[%]RH(no condensation)					
	Atmosphere	No direct sunlight, corrosive gas, or combustible gas					
	Anti-vibration	Vibration acceleration 49[m/s2](5G)					
Weight	[kg]	17.0	22.0	30.8	17.0	22.0	30.8

♦ Rotation speed – Torque Characteristics ♦

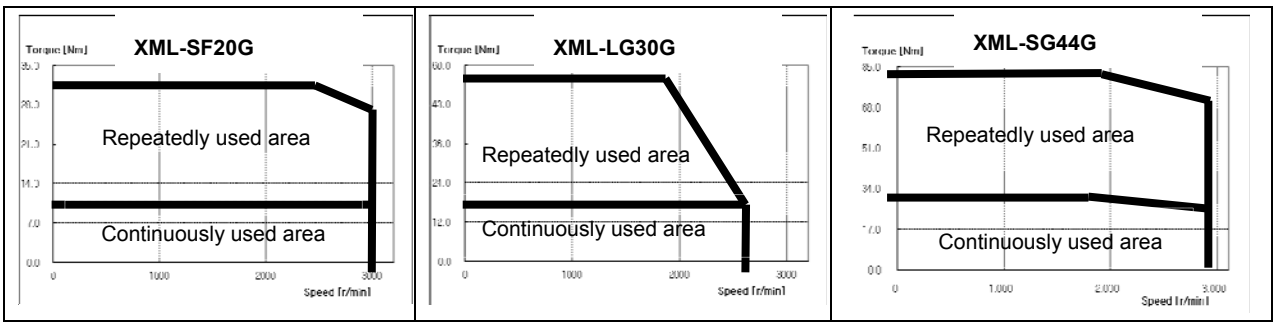

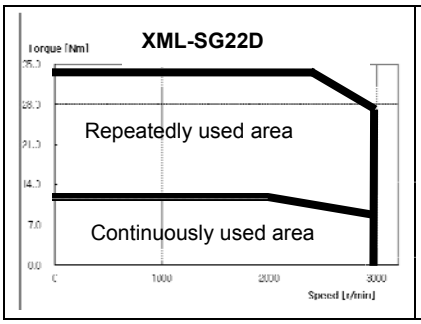

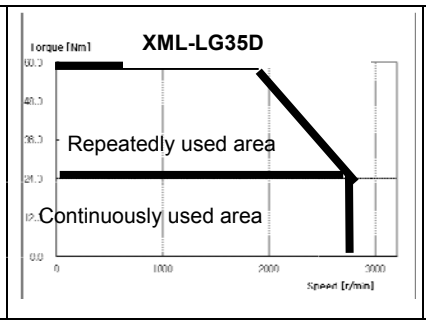

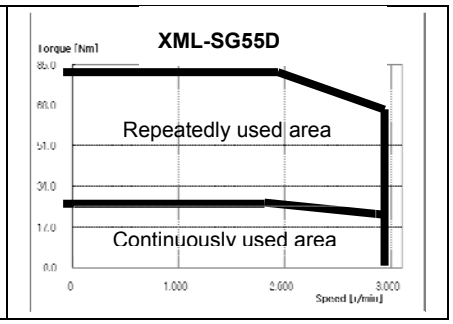

■ Product Features

Servo Motor Type (XML-□□□□□)		SG12M	SG20M	LG30M	SG44M		
Applicable Drive (XDL-L7□A□□)		XDL-L7□A020	XDL-L7□A035		XDL-L7□A050		
Rated output	[kW]	1.2	2.0	3.0	4.4		
Rated torque	[N·m]	11.46	19.10	28.64	42.01		
	[kgf·cm]	116.92	194.86	292.29	428.69		
Maximum instantaneous torque	[N·m]	34.37	57.29	85.93	126.04		
	[kgf·cm]	350.75	584.58	876.88	1286.08		
Rated current	[A]	8.87	15.02	16.04	31.83		
Maximum current	[A]	26.61	45.06	48.12	95.49		
Rated rotation speed	[r/min]	1000					
Maximum rotation speed	[r/min]	2000		1700	2000		
Inertia moment	[kg·m2x10-4]	51.42	80.35	132.41	172.91		
	[gf·cm·s2]	52.47	81.99	135.11	176.44		
Allowed load inertia		Motor inertia x 5					
Rated power rate	[kW/s]	25.53	45.39	61.97	102.08		
Speed and position detector	Standard	Quadrature Type Incremental 3000[P/R]					
	Option	Serial Type 19[bit]					
Specifications and features	Protection method	Fully closed·self-cooling IP65(excluding axis penetration)					
	Time rating	Continuous					
	Ambient temperature	0~40[°C]					
	Ambient humidity	20~80[%]RH(no condensation)					
	Atmosphere	No direct sunlight, corrosive gas, or combustible gas					
	Anti-vibration	Vibration acceleration 49[m/s2](5G)					
Weight	[kg]	17.0	22.0	30.8	37.5	17.0	22.0

♦ Rotation Speed - Torque Characteristics ♦

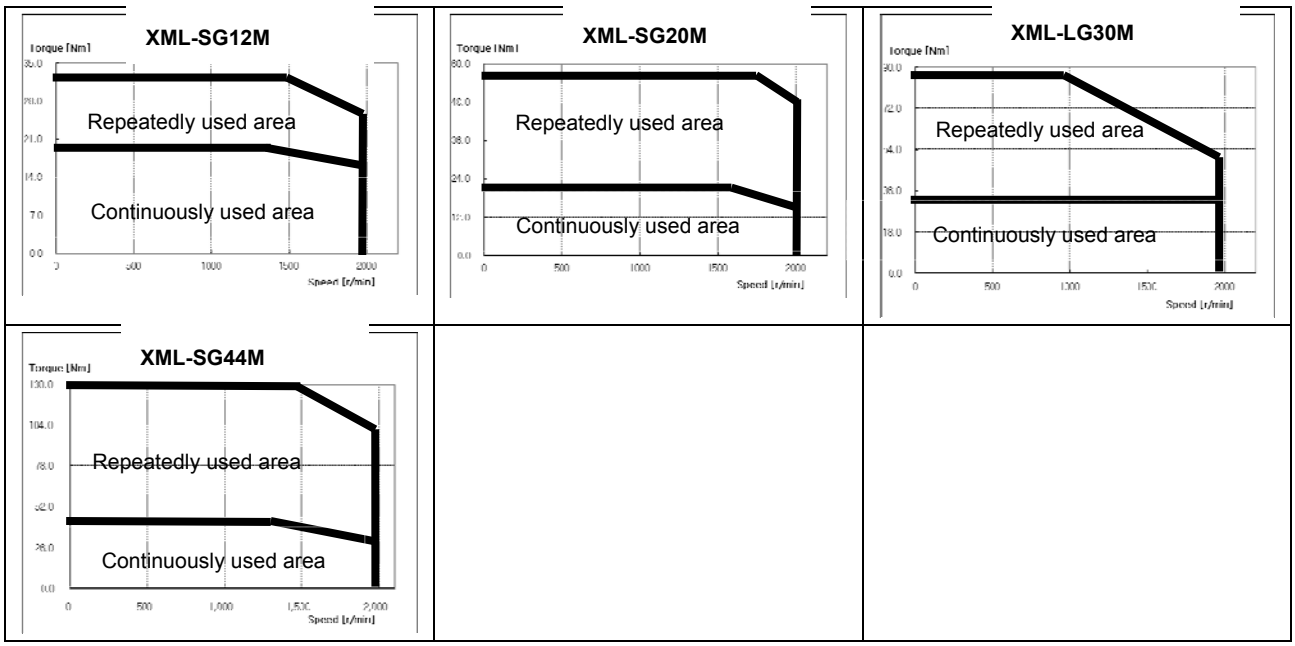

■ Product Features

Servo Motor Type (XML-□□□□□)		HB01A	HB02A	HB04A	HE09A	HE15A	
Applicable Drive (XDL-L7□A□□)		XDL-L7□A002		XDL-L7□A004	XDL-L7□A010	XDL-L7□A020	
Rated output	[kW]	0.1	0.2	0.4	0.9	1.5	
Rated torque	[N·m]	0.32	0.64	1.27	2.86	4.77	
	[kgf·cm]	3.25	6.49	12.99	29.23	48.72	
Maximum instantaneous torque	[N·m]	0.96	1.91	3.82	8.59	14.32	
	[kgf·cm]	9.74	19.48	38.96	87.69	146.15	
Rated current	[A]	1.65	1.63	2.89	4.95	8.23	
Maximum current	[A]	4.95	4.89	8.67	14.85	24.69	
Rated rotation speed	[r/min]	3000					
Maximum rotation speed	[r/min]	3500					
Inertia moment	[kg·m2x10-4]	0.27	0.33	0.46	19.56	22.27	
	[gf·cm·s2]	0.27	0.34	0.47	19.96	22.72	
Allowed load inertia		Motor inertia x 20			Motor inertia x 10		
Rated power rate	[kW/s]	3.34	11.98	34.47	4.10	10.01	
Speed and position detector	Standard	Quadrature Type Incremental 1024P/R			2048 P/R		
	Option	x					
Specifications and features	Protection method	Fully closed·self-cooling IP55(excluding axis penetration)					
	Time rating	Continuous					

	Ambient temperature	0~40°C					
	Ambient humidity	20~80[%]RH(no condensation)					
	Atmosphere	No direct sunlight, corrosive gas, or combustible gas					
	Anti-vibration	Vibration acceleration 49[m/s2](5G)					
Weight	[kg]	0.9	1.2	1.7	5.8	7.4	

♦ Rotation speed – Torque Characteristics ♦

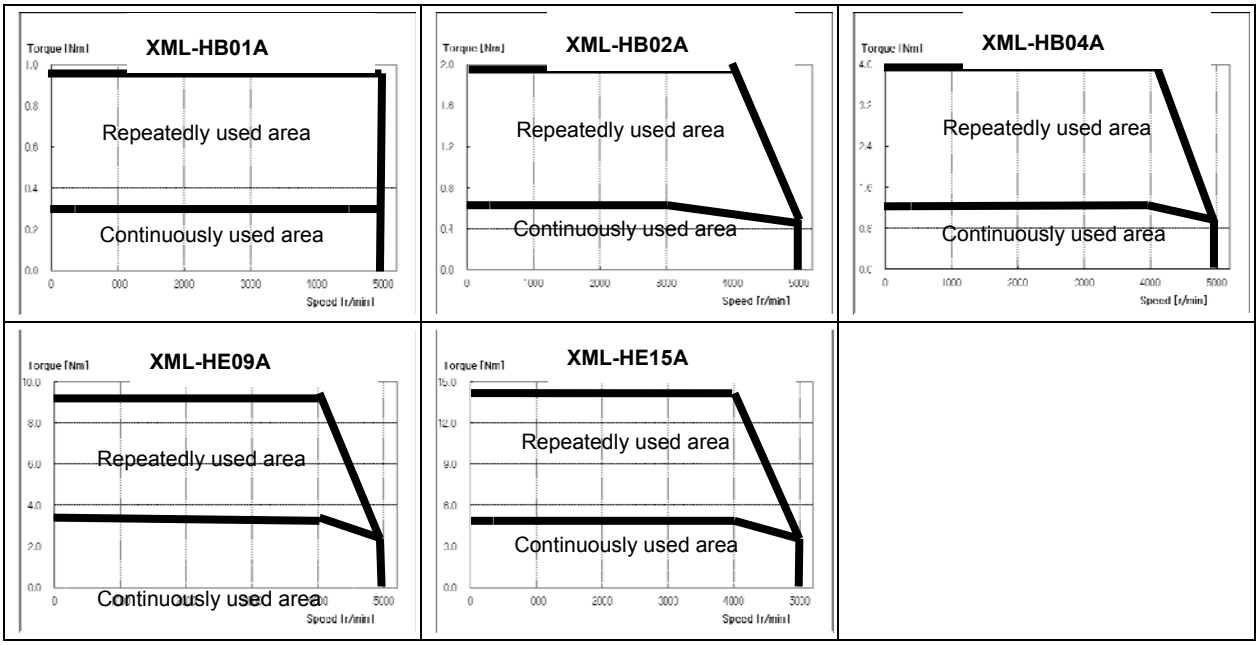

■ Product Features

Servo Motor Type (XML-□□□□□)		FB01A	FB02A	FB04A	FC04A	FC06A	
Applicable Drive (XDL-L7□A□□)		XDL-L7□A001	XDL-L7□A002	XDL-L7□A004		XDL-L7□A008	
Rated output	[kW]	0.10	0.20	0.40	0.40	0.60	
Rated torque	[N·m]	0.32	0.64	1.27	1.27	1.91	
	[kgf·cm]	3.25	6.50	12.99	13.00	19.50	
Maximum instantaneous torque	[N·m]	0.96	1.91	3.82	3.82	5.73	
	[kgf·cm]	9.74	19.49	38.98	38.98	58.47	
Rated current	[A]	0.95	1.45	2.60	2.58	3.81	
Maximum current	[A]	2.86	4.35	7.79	7.75	11.42	
Rated rotation speed	[r/min]	3000					
Maximum rotation speed	[r/min]	5000					
Inertia moment	[kg·m2x10-4]	0.09	0.15	0.25	0.50	0.88	
	[gf·cm·s2]	0.09	0.15	0.25	0.51	0.89	
Allowed load inertia		Motor inertia x 20			Motor inertia x 15		
Rated power rate	[kW/s]	11.38	27.95	65.90	32.62	41.69	
Speed and position detector	Standard	Serial Type 19[bit]					
	Option	X					

Specifications and features	Protection method	Fully closed·self-cooling IP65(excluding axis penetration)					
	Time rating	Continuous					
	Ambient temperature	0~40[°C]					
	Ambient humidity	20~80[%]RH(no condensation)					
	Atmosphere	No direct sunlight, corrosive gas, or combustible gas					
	Anti-vibration	Vibration acceleration 49[m/s2](5G)					
Weight	[kg]	0.7	0.9	1.3	1.6	2.2	

♦ Rotation speed – Torque Characteristics ♦

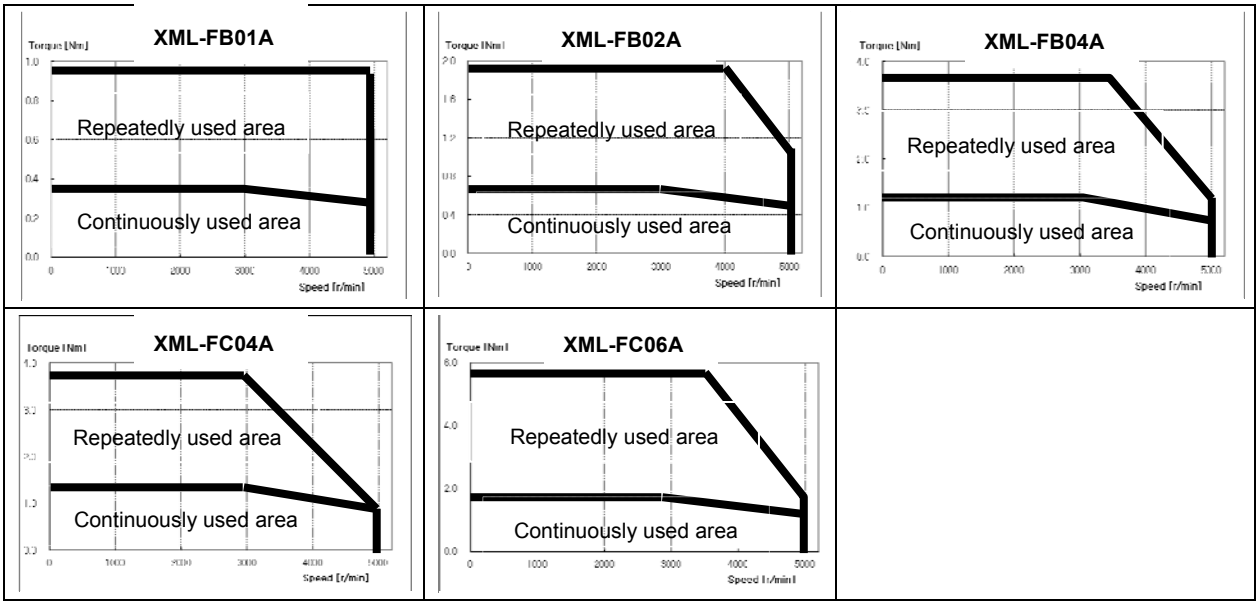

■ Product Features

Servo Motor Type (XML-□□□□□)		FC08A	FC10A	FC03D	FC05D	FC06D	FC07D
Applicable Drive (XDL-L7□A□□)		XDL–L7□A008	XDL-L7□A010	XDL-L7□A004	XDL-L7□A008		
Rated output	[kW]	0.75	1.00	0.30	0.45	0.55	0.65
Rated torque	[N·m]	2.39	3.18	1.43	2.15	2.60	3.10
	[kgf·cm]	24.36	32.50	14.60	21.90	26.80	31.70
Maximum instantaneous torque	[N·m]	7.16	9.55	4.30	6.45	7.88	9.31
	[kgf·cm]	73.08	97.44	43.80	65.80	80.40	95.00
Rated current	[A]	5.02	6.70	2.50	3.05	3.06	3.83
Maximum current	[A]	15.07	20.09	7.51	9.16	9.18	11.50
Rated rotation speed	[r/min]	3000		2000			
Maximum rotation speed	[r/min]	5000		3000			
Inertia moment	[kg·m2x10-4]	1.25	1.62	0.50	0.88	1.25	1.62
	[gf·cm·s2]	1.27	1.65	0.51	0.89	1.27	1.65
Allowed load inertia			Motor inertia x 15				

Rated power rate	[kW/s]	45.78	62.74	41.28	52.76	55.39	59.64
Speed and position detector	Standard		Serial Type 19[bit]				
	Option		X				
Specifications and features	Protection method		Fully closed·self-cooling IP65(excluding axis penetration)				
	Time rating		Continuous				
	Ambient temperature		0~40[°C]				
	Ambient humidity		20~80[%]RH(no condensation)				
	Atmosphere		No direct sunlight, corrosive gas, or combustible gas				
	Anti-vibration		Vibration acceleration 49[m/s2](5G)				
Weight	[kg]	2.7	3.8	1.6	2.2	2.7	3.8

♦ Rotation speed – Torque Characteristics ♦

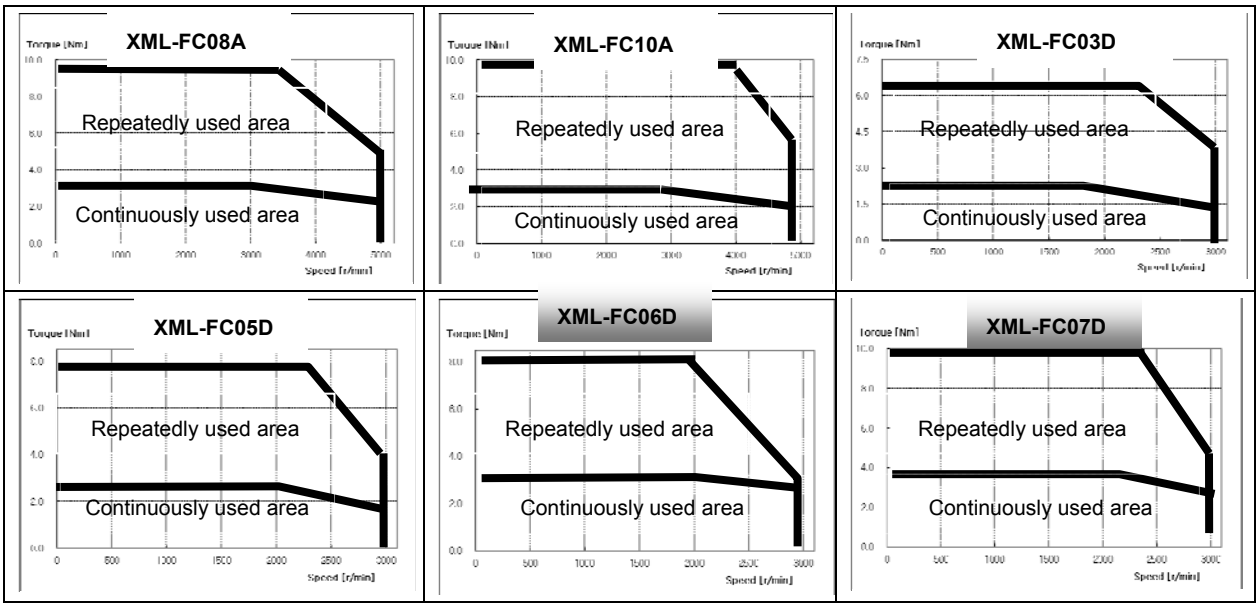

■ Product Features

Servo Motor Type (XML-□□□□□)		FE09A	FE15A	FE22A	FE30A	FE06D	FE11D
Applicable Drive (XDL-L7□A□□)		XDL-L7□A010	XDL-L7□A020	XDL-L7□A035	XDL-L7□A035	XDL-L7□A008	XDL-L7□A010
Rated output	[kW]	0.9	1.5	2.2	3.0	0.6	1.1
Rated torque	[N·m]	2.86	4.77	7.00	9.55	2.86	5.25
	[kgf·cm]	29.20	48.70	71.40	97.40	29.2 0	53.60
Maximum instantaneous torque	[N·m]	8.59	14.32	21.01	28.65	8.59	15.75
	[kgf·cm]	87.70	146.10	214.30	292.20	87.70	160.70
Rated current	[A]	6.45	9.15	13.24	16.09	4.56	6.47
Maximum current	[A]	19.35	27.45	39.72	48.27	13.68	19.41
Rated rotation speed	[r/min]	3000				2000	
Maximum rotation speed	[r/min]	5000				3000	
Inertia moment	[kg·m2x10-4]	5.66	10.18	14.62	19.04	5.66	10.18

	[gf·cm·s2]	5.77	10.39	14.92	19.43	5.77	10.39
Allowed load inertia		Motor inertia x 10					
Rated power rate	[kW/s]	14.47	22.38	33.59	47.85	14.49	27.08
Speed and position detector	Standard	Serial Type 19 [bit]					
	Option	X					
Specifications and features	Protection method	Fully closed·self-cooling IP65(excluding axis penetration)					
	Time rating	Continuous					
	Ambient temperature	0~40[°C]					
	Ambient humidity	20~80[%]RH(no condensation)					
	Atmosphere	No direct sunlight, corrosive gas, or combustible gas					
	Anti-vibration	Vibration acceleration 49[m/s2](5G)					
Weight	[kg]	5.0	6.7	8.5	10.1	5.0	6.7

♦ Rotation speed – Torque Characteristics ♦

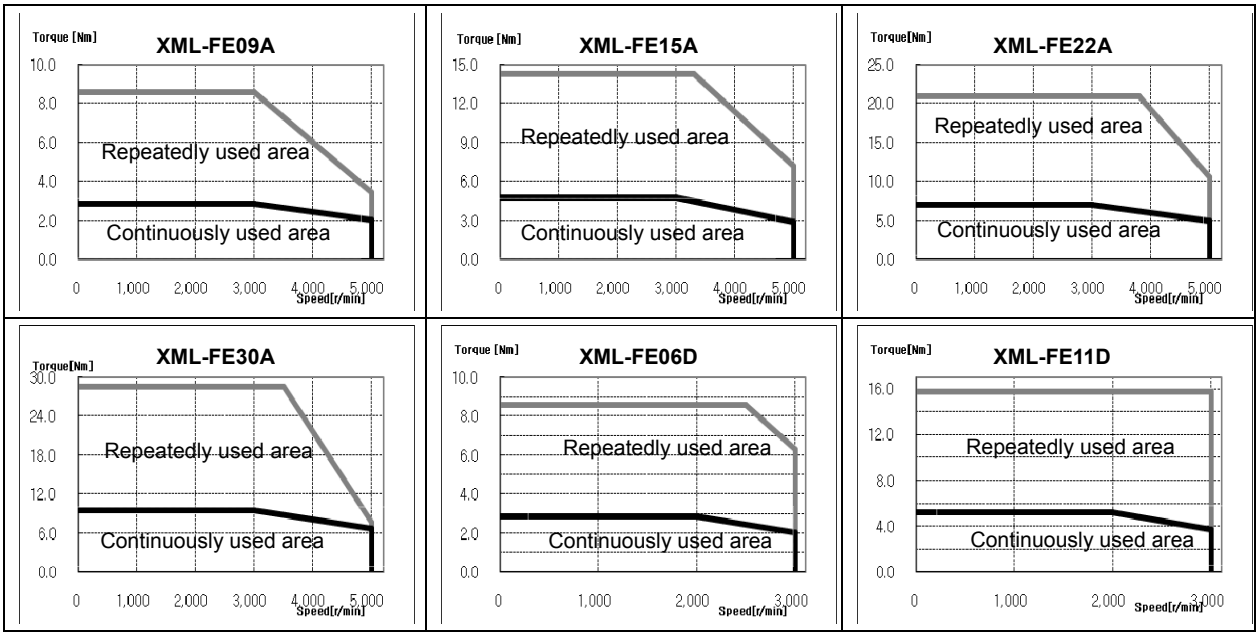

■ Product Features

Servo Motor Type (XML-□□□□□)		FE16D	FE22D	FE03M	FE06M	FE09M	FE12M
Applicable Drive (XDL-L7□A□□)		XDL-L7□A020	XDL-L7□A035	XDL-L7□A004	XDL-L7□A008	XDL-L7□A010	XDL-L7□A020
Rated output	[kW]	1.6	2.2	0.3	0.6	0.9	1.2
Rated torque	[N·m]	7.63	10.5	2.86	5.72	8.59	11.46
	[kgf·cm]	77.90	107.10	29.22	58.4	87.7	116.9
Maximum instantaneous torque	[N·m]	22.92	31.51	8.59	17.18	25.77	34.22
	[kgf·cm]	233.80	321.40	87.66	175.3	262.9	349.1
Rated current	[A]	10.98	12.97	2.73	4.56	6.18	10.67
Maximum current	[A]	32.94	38.91	8.19	13.68	18.54	32.01

Rated rotation speed	[r/min]	2000		1000			
Maximum rotation speed	[r/min]	3000		2000			
Inertia moment	[kg·m2x10-4]	14.62	19.04	5.66	10.18	14.62	19.04
	[gf·cm·s2]	14.92	19.43	5.77	10.39	14.92	19.43
Allowed load inertia		Motor inertia x 10					
Rated power rate	[kW/s]	39.89	57.90	14.49	32.22	50.48	68.91
Speed and position detector	Standard	Serial Type 19 [bit]					
	Option	X					
Specifications and features	Protection method	Fully closed·self-cooling IP65(excluding axis penetration)					
	Time rating	Continuous					
	Ambient temperature	0~40[°C]					
	Ambient humidity	20~80[%]RH(no condensation_					
	Atmosphere	No direct sunlight, corrosive gas, or combustible gas					
	Anti-vibration	Vibration acceleration 49[m/s2](5G)					
Weight	[kg]	8.5	10.1	5.0	6.7	8.5	10.1

♦ Rotation speed – Torque Characteristics ♦

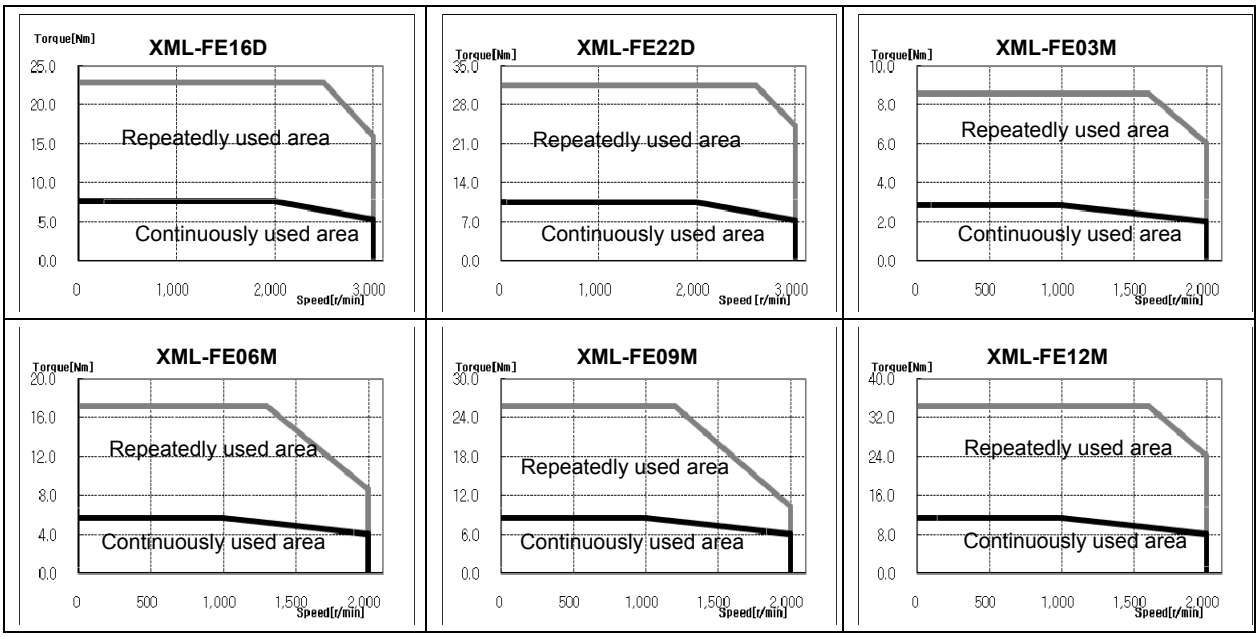

■Product Features

Servo Motor Type (XML-□□□□□)		FE05G	FE09G	FE13G	FE17G	FF30A	FF50A
Applicable Drive (XDL-L7□A□□)		XDL-L7□A008	XDL-L7□A010	XDL-L7□A020		XDL-L7□A035	XDL-L7□A050
Rated output	[kW]	0.45	0.85	1.3	1.7	3.0	5.0
Rated torque	[N·m]	2.86	5.41	8.27	10.82	9.55	15.91
	[kgf·cm]	29.22	55.19	84.41	110.38	97.40	162.30
Maximum	[N·m]	8.59	16.23	24.82	32.46	28.65	47.74

instantaneous torque	[kgf·cm]	87.66	165.57	253.23	331.14	292.3	487.00
Rated current	[A]	4.56	6.67	11.90	13.36	15.26	26.47
Maximum current	[A]	13.68	20.01	35.7	40.08	45.78	79.41
Rated rotation speed	[r/min]	1500				3000	
Maximum rotation speed	[r/min]	3000				5000	
Inertia moment	[kg·m2x10-4]	5.66	10.18	14.62	19.04	27.96	46.56
	[gf·cm·s2]	5.77	10.39	14.92	19.43	28.53	47.51
Allowed load inertia		Motor inertia x 10				Motor inertia x 5	
Rated power rate	[kW/s]	14.49	28.74	46.81	61.46	32.59	54.33
Speed and position detector	Standard	Serial Type 19 [bit]					
	Option	X					
Specifications and features	Protection method	Fully closed·self-cooling IP65(excluding axis penetration)					
	Time rating	Continuous					
	Ambient temperature	0~40[°C]					
	Ambient humidity	20~80[%]RH(no condensation)					
	Atmosphere	No direct sunlight, corrosive gas, or combustible gas					
	Anti-vibration	Vibration acceleration 49[m/s2](5G)					
Weight	[kg]	5.0	6.7	8.5	10.1	12.5	17.4

♦ Rotation speed – Torque Characteristics ♦

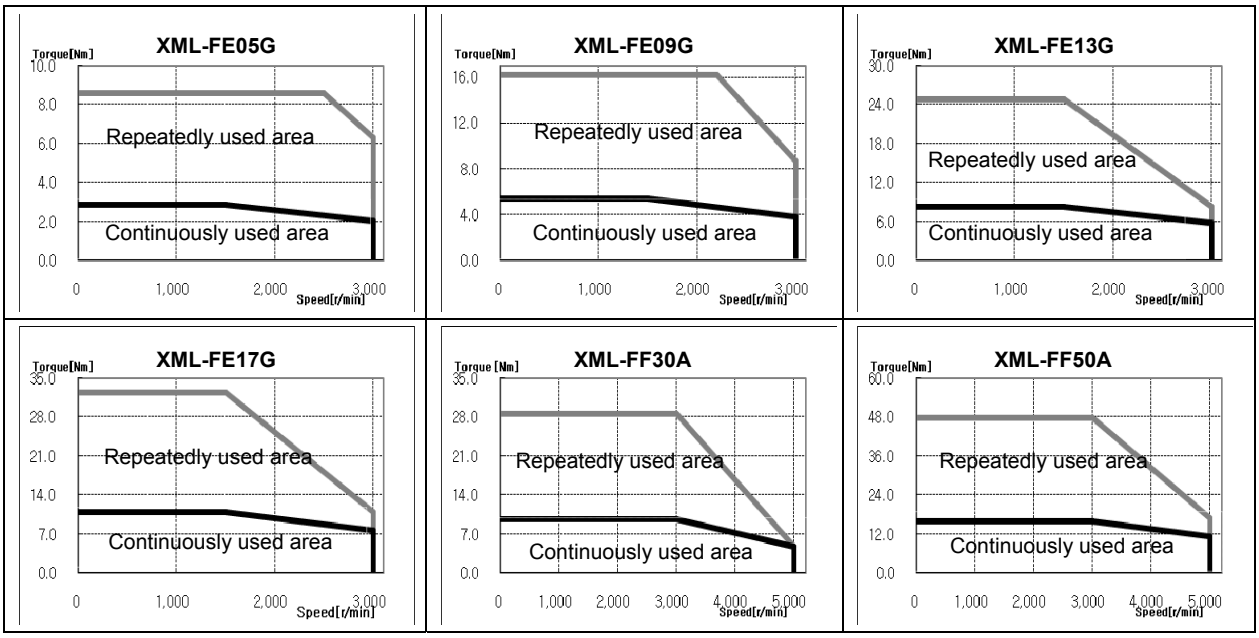

■Protect Features

Servo Motor Type (XML-□□□□□)		FF22D	FF35D	FF55D	FF20G	FF30G	FF44G
Applicable Drive (XDL-L7□A□□)		XDL-L7□A020	XDL-L7□A035	XDL-L7□A050	XDL-L7□A020	XDL-L7□A035	XDL-L7□A050
Rated output	[kW]	2.2	3.5	5.5	1.8	2.9	4.4
Rated torque	[N·m]	10.50	16.70	26.25	11.45	18.46	28.00
	[kgf·cm]	107.1	170.4	267.8	116.9	188.3	285.7
Maximum instantaneous torque	[N·m]	31.50	50.10	78.76	34.35	55.38	84.03
	[kgf·cm]	321.30	511.40	803.4	350.60	564.90	857.10
Rated current	[A]	13.07	16.48	28.78	12.16	15.98	30.70
Maximum current	[A]	39.21	49.44	86.34	36.48	47.94	92.10
Rated rotation speed	[r/min]	2000			1500		
Maximum rotation speed	[r/min]	3000			3000	2700	3000
Inertia moment	[kg·m2x10-4]	27.96	46.56	73.85	27.96	46.56	73.85
	[gf·cm·s2]	28.53	47.51	75.36	28.53	47.51	75.36
Allowed load inertia		Motor inertia x 5					
Rated power rate	[kW/s]	39.43	59.89	93.27	46.92	73.14	106.15
Speed and position detector	Standard	Serial Type 19 [bit]					
	Option	X					
Specifications and features	Protection method	Fully closed·self-cooling IP65(excluding axis penetration)					
	Time rating	Continuous					
	Ambient temperature	0~40[°C]					
	Ambient humidity	20~80[%]RH(no condensation)					
	Atmosphere	No direct sunlight, corrosive gas, or combustible gas					
	Anti-vibration	Vibration acceleration 49[m/s2](5G)					
Weight	[kg]	12.5	17.4	25.12	12.5	17.4	25.2

♦ Rotation speed – Torque Characteristics ♦

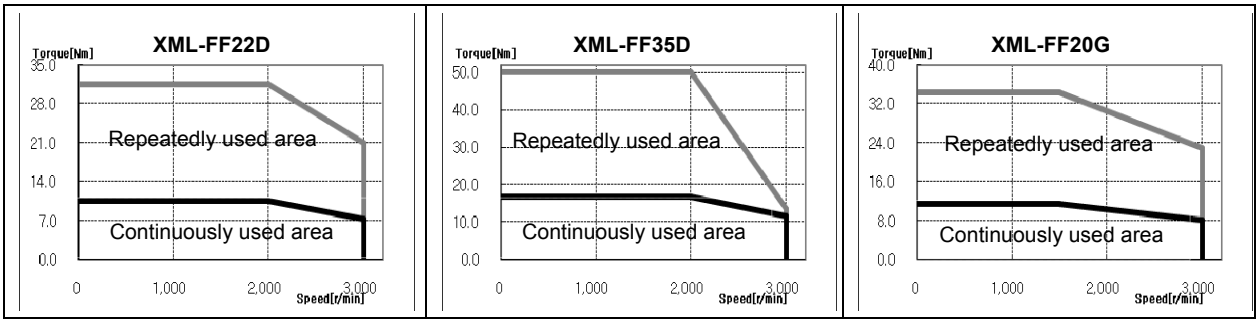

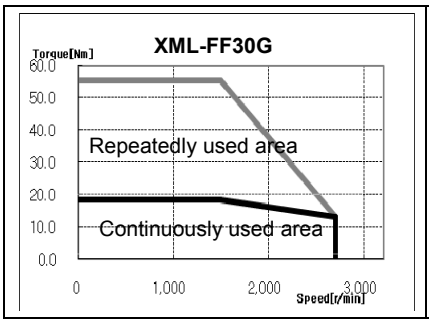

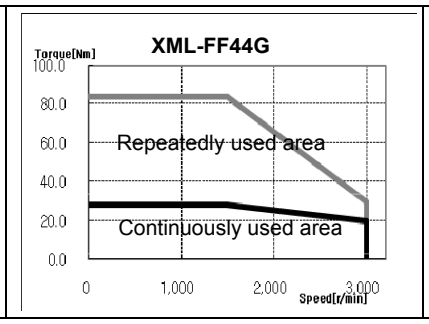

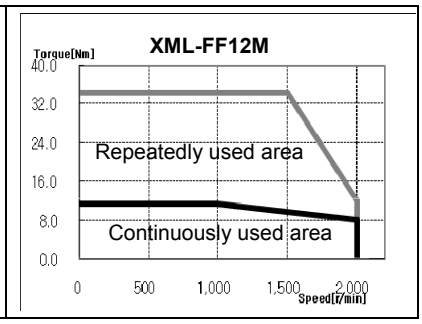

■Product Features

Servo Motor Type (XML-□□□□□)		FF12M	FF20M	FF30M	FF44M		
Applicable Drive (XDL-L7□A□□)		XDL-L7□A020	XDL-L7□A020	XDL-L7□A035	XDL-L7□A050		
Rated output	[kW]	1.2	2.0	3.0	4.4		
Rated torque	[N·m]	11.46	19.09	28.64	42.02		
	[kgf·cm]	116.9	194.8	292.2	428.7		
Maximum instantaneous torque	[N·m]	34.38	57.29	85.94	126.1		
	[kgf·cm]	350.70	584.40	876.60	128.60		
Rated current	[A]	11.01	12.96	16.58	30.60		
Maximum current	[A]	33.03	38.88	49.74	91.8		
Rated rotation speed	[r/min]	1000					
Maximum rotation speed	[r/min]	2000		1700	2000		
Inertia moment	[kg·m2x10-4]	27.96	46.56	73.85	106.7		
	[gf·cm·s2]	28.53	47.51	75.36	108.9		
Allowed load inertia		Motor inertia x 5					
Rated power rate	[kW/s]	46.94	78.27	111.04	165.38		
Speed and position detector	Standard	Serial Type 19 [bit]					
	Option	X					
Specifications and features	Protection method	Fully closed·self-cooling IP65(excluding axis penetration)					
	Time rating	Continuous					
	Ambient temperature	0~40[°C]					
	Ambient humidity	20~80[%]RH(no condensation)					
	Atmosphere	No direct sunlight, corrosive gas, or combustible gas					
	Anti-vibration	Vibration acceleration 49[m/s2](5G)					
Weight	[kg]	12.5	17.4	25.2	33.8		

♦ Rotation speed – Torque Characteristics ♦

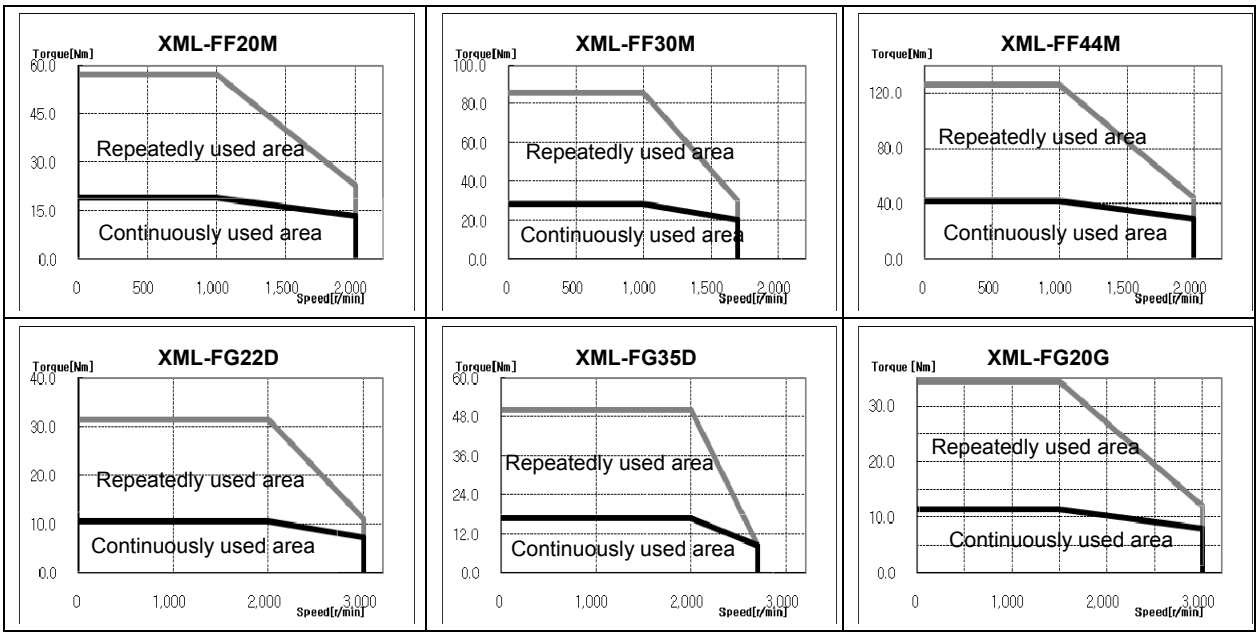

■Product Features

Servo Motor Type (XML-□□□□□)		FG22D	FG35D	FG55D	FG20G	FG30G	FG44G
Applicable Drive (XDL-L7□A□□)		XDL-L7□A035	XDL-L7□A050	XDL-L7□A020		XDL-L7□A035	XDL-L7□A050
Rated output	[kW]	2.9	4.4	1.2	2.0	3.0	4.4
Rated torque	[N·m]	18.50	28.00	11.50	19.10	28.60	42.00
	[kgf·cm]	188.4	285.8	116.9	194.9	292.3	428.7
Maximum instantaneous torque	[N·m]	55.40	84.00	34.40	57.30	85.90	126.00
	[kgf·cm]	565.1	857.4	350.8	584.6	876.9	128.61
Rated current	[A]	10.25	14.67	29.74	11.18	16.21	31.72
Maximum current	[A]	30.75	44.01	89.22	33.54	48.63	95.16
Rated rotation speed	[r/min]	2000			1500		
Maximum rotation speed	[r/min]	3000	2700	3000	3000	2700	3000
Inertia moment	[kg·m2x10-4]	41.13	71.53	117.72	14.13	71.53	117.72
	[gf·cm·s2]	41.97	72.99	120.12	41.97	72.99	120.12
Allowed load inertia		Motor inertia x 5					
Rated power rate	[kW/s]	26.78	38.99	58.51	31.91	47.66	66.64
Speed and position detector	Standard	Serial Type 19 [bit]					
	Option	X					
Specifications and features	Protection method	Fully closed·self-cooling IP65(excluding axis penetration)					
	Time rating	Continuous					
	Ambient temperature	0~40[°C]					
	Ambient humidity	20~80[%]RH(no condensation)					
	Atmosphere	No direct sunlight, corrosive gas, or combustible gas					
	Anti-vibration	Vibration acceleration 49[m/s2](5G)					
Weight	[kg]	15.4	20.2	28.12	15.4	20.2	28.0

♦ Rotation speed – Torque Characteristics ♦

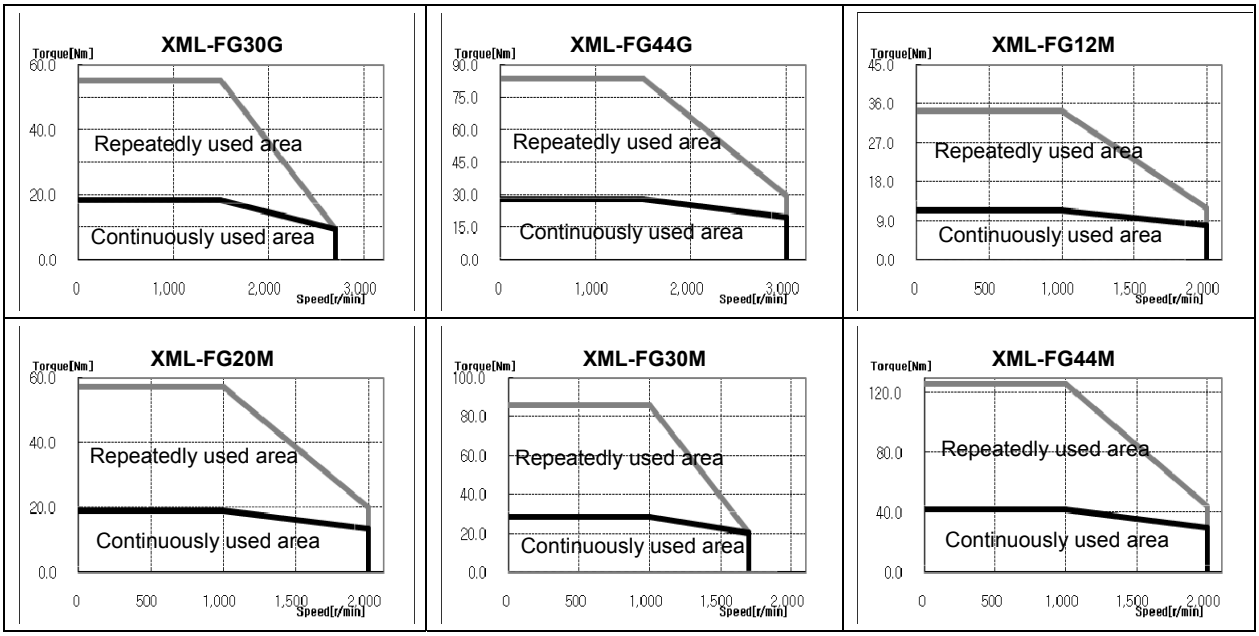

■Product Features

Servo Motor Type (XML-□□□□□)		FG12M	FG20M	FG30M	FG44M		
Applicable Drive (XDL-L7□A□□)		Applicable Drive (XDL-L7□A□□)		**XDL-L7□A035**	**XDL-L7□A050**		
Rated output	[kW]	1.2	2.0	3.0	4.4		
Rated torque	[N·m]	11.50	19.10	28.60	42.00		
	[kgf·cm]	116.9	194.9	292.3	428.7		
Maximum instantaneous torque	[N·m]	34.40	57.30	85.90	126.00		
	[kgf·cm]	350.8	584.6	876.9	128.61		
Rated current	[A]	11.28	13.10	15.52	27.26		
Maximum current	[A]	33.84	39.3	46.56	81.78		
Rated rotation speed	[r/min]	1000					
Maximum rotation speed	[r/min]	2000		1700	2000		
Inertia moment	[kg·m2x10-4]	41.13	71.53	117.72	149.40		
	[gf·cm·s2]	41.97	72.99	120.12	152.45		
Allowed load inertia		Allowed load inertia					
Rated power rate	[kW/s]	31.91	51.00	69.70	118.14		
Speed and position detector	Standard	Serial Type 19 [bit]					
	Option	X					
Specifications and features	Protection method	Fully closed·self-cooling IP65(excluding axis penetration)					
	Time rating	Continuous					

	Ambient temperature	0~40[°C]					
	Ambient humidity	20~80[%]RH(no condensation)					
	Atmosphere	No direct sunlight, corrosive gas, or combustible gas					
	Anti-vibration	Vibration acceleration 49[m/s2](5G)					
Weight	[kg]	15.4	20.2	28.0	33.5		

♦ Rotation speed – Torque Characteristics ♦

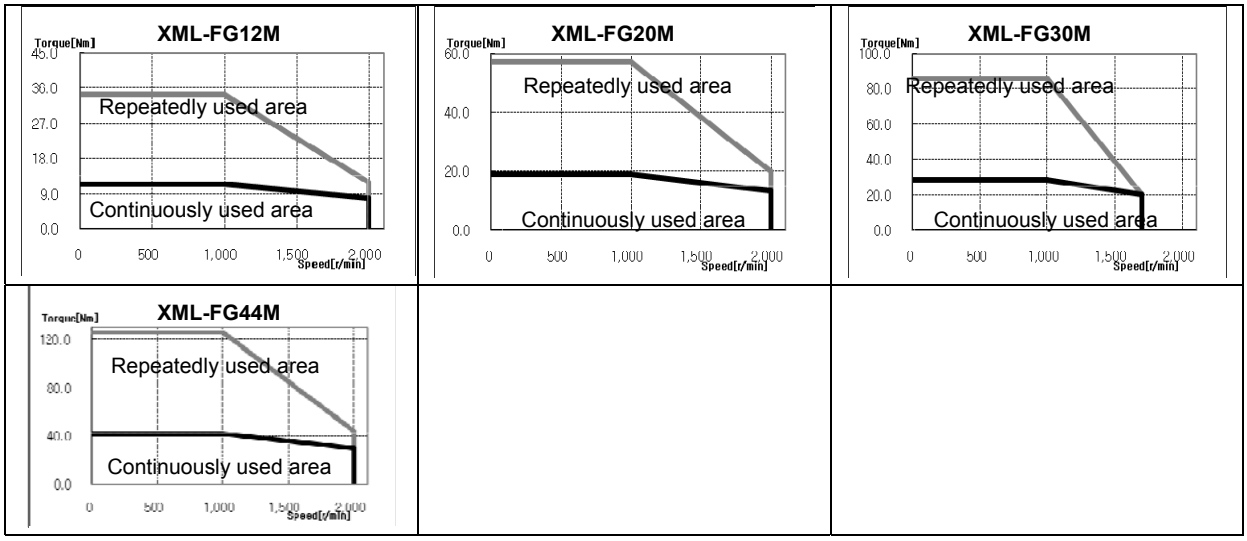

■ Product Features

Servo Motor Type (XML-□□□□□)		FALR5A	FAL01A	FAL015A	FBL01A	FBL02A	FBL04A
Applicable Drive **(XDL-L7□A□□)**		**XDL-L7□A001**		**XDL-L7□A002**	**XDL-L7□A001**	**XDL-L7□A002**	**XDL-L7□A004**
Rated output	[kW]	0.05	0.10	0.15	0.10	0.20	0.40
Rated torque	[N·m]	0.16	0.32	0.48	0.32	0.64	1.27
	[kgf·cm]	1.62	3.25	4.87	3.25	6.49	12.99
Maximum instantaneous torque	[N·m]	0.48	0.96	1.43	0.96	1.91	3.82
	[kgf·cm]	4.87	9.74	14.62	9.74	19.48	38.96
Rated current	$[A]_{\Phi.ac.rms}$	0.95	1.25	1.76	0.95	1.45	2.60
Maximum current	$[A]_{\Phi.ac.rms}$	2.85	3.75	5.28	2.85	4.35	7.80
Rated rotation speed	[r/min]	3000					
Maximum rotation speed	[r/min]	5000					
Inertia moment	[kg·m2x10-4]	0.023	0.042	0.063	0.091	0.147	0.248
	[gf·cm·s2]	0.024	0.043	0.065	0.093	0.150	0.253
Allowed load inertia		Motor inertia x 30		Motor inertia Motor inertia x 20			
Rated power rate	[kW/s]	10.55	23.78	35.34	11.09	27.60	27.07

Speed and position detector	Standard	Serial Multi-Turn Built-in Type(18bit)			Serial Multi-Turn Built-in Type(19bit)		
	Option	x					
Specifications and features	Protection method	Fully closed·self-cooling IP67(excluding axis penetration)					
	Time rating	Continuous					
	Ambient temperature	0~40[°C]					
	Ambient humidity	20~80[%]RH(no condensation)					
	Atmosphere	No direct sunlight, corrosive gas, or combustible gas					
	Anti-vibration	Vibration acceleration 49[m/s2](5G)					
Weight	[kg]	0.31	0.45	0.61	0.56	0.74	1.06

♦ Rotation speed – Torque Characteristics ♦

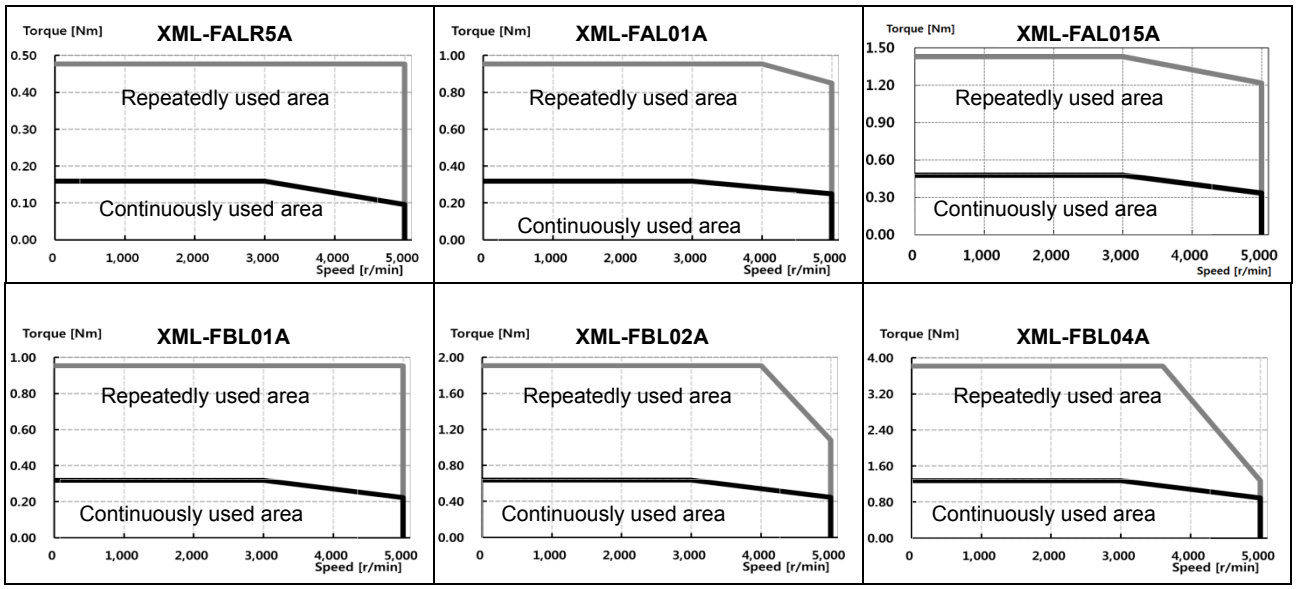

■ Product Features

Servo Motor Type (XML-□□□□□)		FCL04A	FCL06A	FCL08A	FCL10A		
Applicable Drive (XDL-L7□A□□)		XDL-L7□A004	XDL-L7□A008		XDL-L7□A010		
Rated output	[kW]	0.40	0.60	0.75	1.00		
Rated torque	[N·m]	1.27	1.91	2.39	3.18		
	[kgf·cm]	12.99	19.49	24.36	32.48		
Maximum instantaneous torque	[N·m]	3.82	5.73	7.16	9.55		
	[kgf·cm]	38.98	58.47	73.08	97.44		
Rated current	$[A]_{\Phi.ac.rms}$	2.58	3.81	5.02	5.83		
Maximum current	$[A]_{\Phi.ac.rms}$	7.75	11.42	15.07	17.50		
Rated rotation speed	[r/min]	3000					

Maximum rotation speed	[r/min]	5000					
Inertia moment	[kg·m2x10-4]	0.530	0.897	1.264	1.632		
	[gf·cm·s2]	0.541	0.915	1.290	1.665		
Allowed load inertia							
Rated power rate	[kW/s]	30.60	40.66	45.09	62.08		
Speed and position detector	Standard	Serial Multi-Turn Built-in Type(19bit)					
	Option	x					
Specifications and features	Protection method	Fully closed·self-cooling IP67(excluding axis penetration)					
	Time rating	Continuous					
	Ambient temperature	0~40[°C]					
	Ambient humidity	20~80[%]RH(no condensation)					
	Atmosphere	No direct sunlight, corrosive gas, or combustible gas					
	Anti-vibration	Vibration acceleration 49[m/s2](5G)					
Weight	[kg]	1.52	2.14	2.68	3.30		

♦ Rotation speed – Torque Characteristics ♦

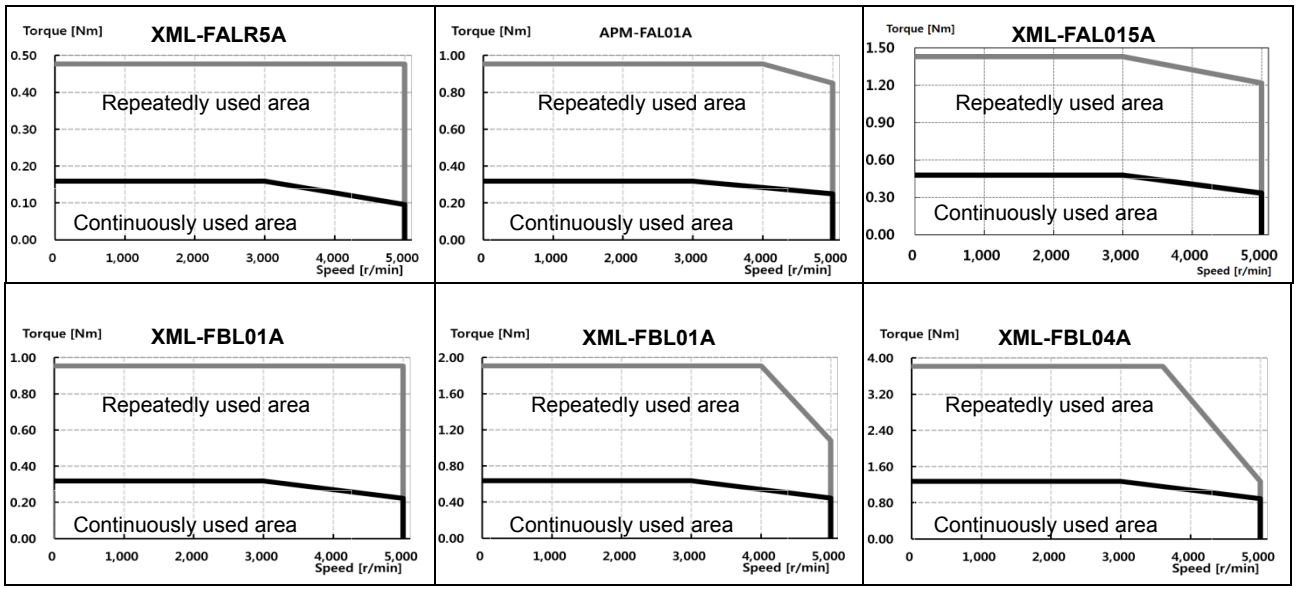

■ Product Features

Servo Motor Type (XML-□□□□□)		FCL04A	FCL06A	FCL08A	FCL10A		
Applicable Drive (XDL-L7□A□□)		XDL-L7□A004	XDL-L7□A008		XDL-L7□A010		
Rated output	[kW]	0.40	0.60	0.75	1.00		
Rated torque	[N·m]	1.27	1.91	2.39	3.18		
	[kgf·cm]	12.99	19.49	24.36	32.48		
Maximum instantaneous torque	[N·m]	3.82	5.73	7.16	9.55		
	[kgf·cm]	38.98	58.47	73.08	97.44		
Rated current	$[A]_{\Phi.ac.rms}$	2.58	3.81	5.02	5.83		
Maximum current	$[A]_{\Phi.ac.rms}$	7.75	11.42	15.07	17.50		
Rated rotation speed	[r/min]	3000					
Maximum rotation speed	[r/min]	5000					
Inertia moment	[kg·m2x10-4]	0.530	0.897	1.264	1.632		
	[gf·cm·s2]	0.541	0.915	1.290	1.665		
Allowed load inertia							
Rated power rate	[kW/s]	30.60	40.66	45.09	62.08		
Speed and position detector	Standard	Serial Multi-Turn Built-in Type(19bit)					
	Option	x					
Specifications and features	Protection method	Fully closed·self-cooling IP67(excluding axis penetration)					
	Time rating	Continuous					
	Ambient temperature	0~40[°C]					
	Ambient humidity	20~80[%]RH(no condensation)					
	Atmosphere	No direct sunlight, corrosive gas, or combustible gas					
	Anti-vibration	Vibration acceleration 49[m/s2](5G)					
Weight	[kg]	1.52	2.14	2.68	3.30		

♦ Rotation speed – Torque Characteristics ♦

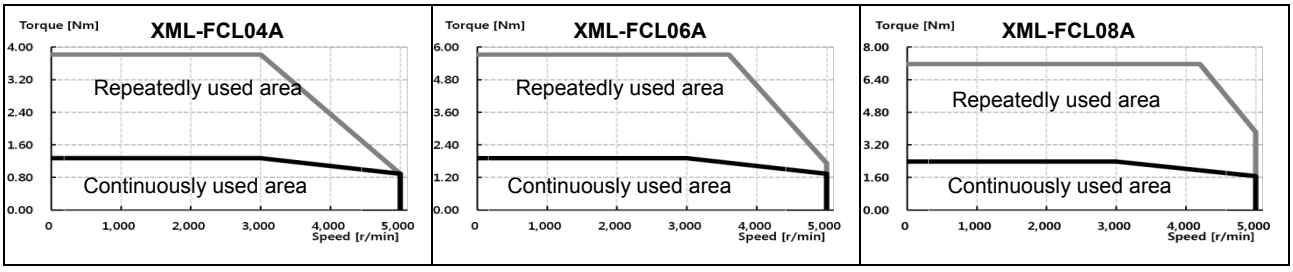

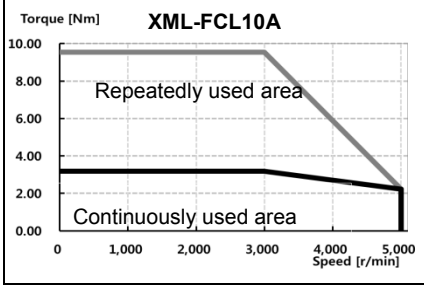

■ Product Features

Servo Motor Type (XML-□□□□□)		FCL03D	FCL05D	FCL06D	FCL07D		
Applicable Drive (XDL-L7□A□□)		XDL-L7□A004	XDL-L7□A008				
Rated output	[kW]	0.30	0.45	0.55	0.65		
Rated torque	[N·m]	1.43	2.15	2.63	3.10		
	[kgf·cm]	14.62	21.92	26.80	31.67		
Maximum instantaneous torque	[N·m]	4.30	6.45	7.88	9.31		
	[kgf·cm]	43.85	65.77	80.39	95.01		
Rated current	[A]$_{\Phi.ac.rms}$	2.50	3.05	3.06	3.83		
Maximum current	[A]$_{\Phi.ac.rms}$	7.51	9.16	9.18	11.50		
Rated rotation speed	[r/min]	2000					
Maximum rotation speed	[r/min]	3000					
Inertia moment	[kg·m2x10-4]	0.530	0.897	1.264	1.63		
	[gf·cm·s2]	0.541	0.915	1.290	1.66		
Allowed load inertia							
Rated power rate	[kW/s]	38.73	51.47	54.56	59.03		
Speed and position detector	Standard	Serial Multi-Turn Built-in Type(19bit)					
	Option	x					
Specifications and features	Protection method	Fully closed·self-cooling IP67(excluding axis penetration)					
	Time rating	Continuous					
	Ambient temperature	0~40[°C]					
	Ambient humidity	20~80[%]RH(no condensation)					
	Atmosphere	No direct sunlight, corrosive gas, or combustible gas					
	Anti-vibration	Vibration acceleration 49[m/s2](5G)					
Weight	[kg]	1.26	2.12	2.66	2.78		

♦ Rotation speed – Torque Characteristics ♦

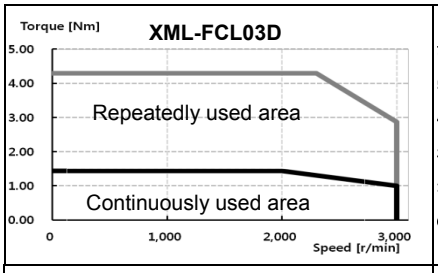
XML-FCL03D
Torque [Nm]
5.00
4.00
3.00
2.00
1.00
0.00
Repeatedly used area
Continuously used area
0
1,000
2,000
3,000
Speed [r/min]

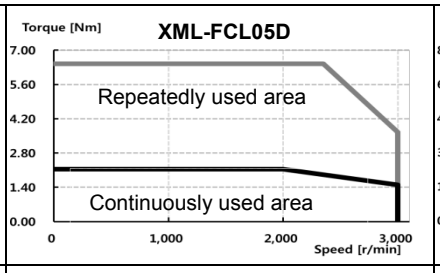
XML-FCL05D
Torque [Nm]
7.00
5.60
4.20
2.80
1.40
0.00
Repeatedly used area
Continuously used area
0
1,000
2,000
3,000
Speed [r/min]

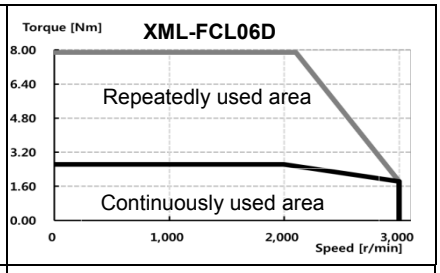
XML-FCL06D
Torque [Nm]
8.00
6.40
4.80
3.20
1.60
0.00
Repeatedly used area
Continuously used area
0
1,000
2,000
3,000
Speed [r/min]

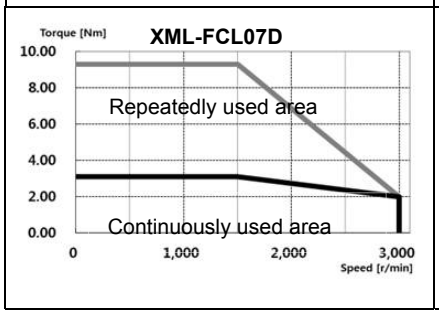
XML-FCL07D
Torque [Nm]
10.00
8.00
6.00
4.00
2.00
0.00
Repeatedly used area
Continuously used area
0
1,000
2,000
3,000
Speed [r/min]

■ Electric Brake Specifications

Applicable Motor Series	XML-SA	XML-SB	XML-SC	XML-SE	XML-SF	XML-SG
Purpose	Maintenance					
Input voltage [V]	DC 24V	DC 24V				DC 90V
Static friction torque [N•m]	0.32	1.47	3.23	10.4	40	74
Capacity [W]	6	6.5	9	19.4	25	32
Coil resistance [Ω]	96	89	64	29.6	23	327
Rated current [A]	0.25	0.27	0.38	0.81	1.04	0.28
Braking mechanism	Spring brake					
Insulation grade	GraDde F					
Applicable Motor Series	**XML-FB**	**XML-FC**				
Purpose	Maintenance	Maintenance				
Input voltage [V]	DC 24V	DC 24V				
Static friction torque [N•m]	1.47	3.23				
Capacity [W]	6.5	9				
Coil resistance [Ω]	89	64				
Rated current [A]	0.27	0.38				
Braking mechanism	Spring brake	Spring brake				
Insulation grade	Grade F	Grade F				

NOTE 1) The same specifications apply to all electric brakes installed in our servo motors.

NOTE 2) Electric brakes are designed to maintain a stop. Never use them for absolute braking.

NOTE 3) The characteristics of the electric brakes were measured at 20°C.

NOTE 4) These brake specifications are subject to change. Check the voltage specifications on your specific motor.

7.1.2 Outline Drawing

■ SA Series | XML-SAR3A, XML-SAR5A, XML-SA01A, XML-SA015A

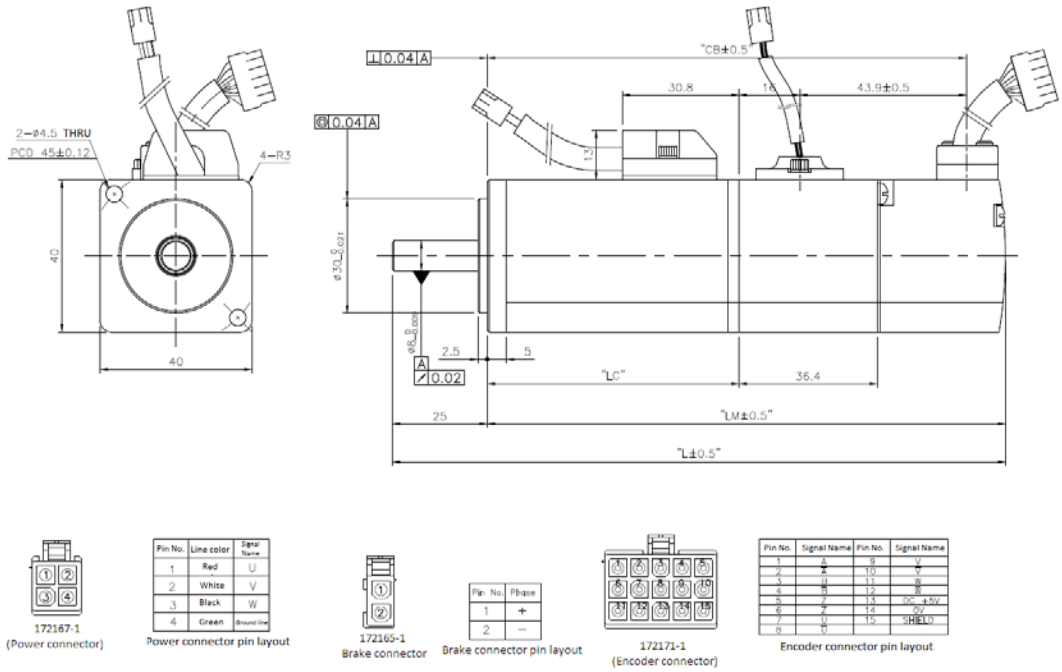

Name	External Dimensions				Weight (kg)
	L	LM	LC	CB	
SAR3A	101.3(137.6)	76.3(112.6)	42.5(42.4)	66.3(102.3)	0.32(0.67)
SAR5A	108.3(144.6)	83.3(119.6)	49.5(49.4)	73.3(109.3)	0.38(0.73)
SA01A	125.3(161.6)	100.3(136.6)	66.5(66.4)	90.3(126.3)	0.5(0.85)
SA015A	145.3	120.3	86.5	110.3	0.7

NOTE 1) The standard shaft end for 40 flange is straight.

NOTE 2) Use DC 24 [V] for brake-opening power.

NOTE 3) The sizes in parentheses apply when attached to brakes.(Except SA015A)

NOTE 4) Option specification; Serial M-turn Encoder PinMap

<Serial M-turn Encoder Connector>

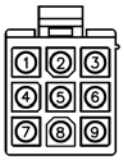

Pin No.	Phase	Pin No.	Phase
1	MA	6	GND_B
2	$\overline{MA}$	7	+5V
3	SL	8	0V
4	$\overline{SL}$	9	SHIELD
5	VDD_B		

Plug : 172169-1(AMP)

■ SB Series | XML-SB01A, XML-SB02A, XML-SB04A

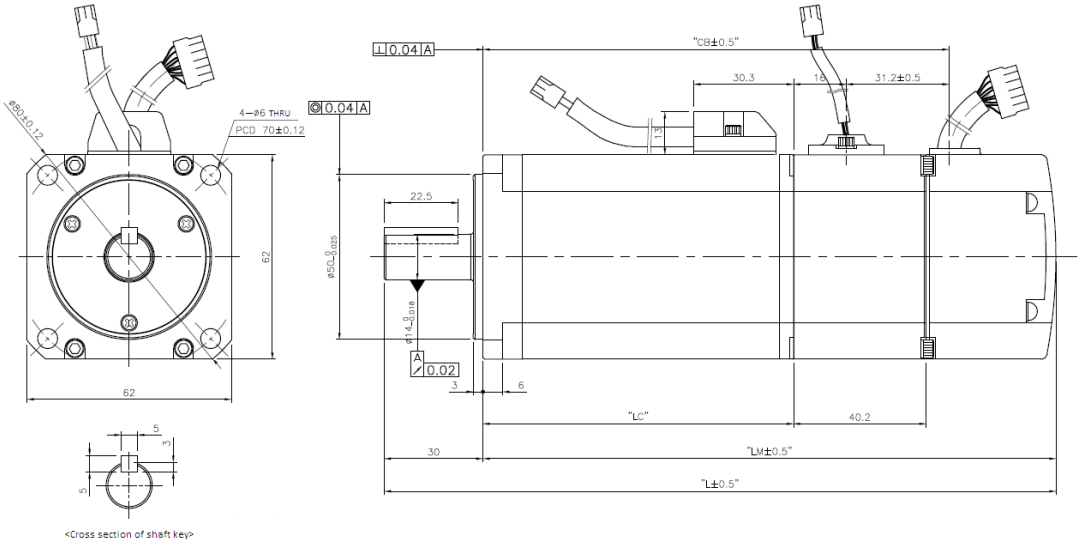

172167-1
(Power connector)

Pin no.	Line color	Signal name
1	Red	U
2	White	V
3	Black	W
4	Green	Ground line

Power connector pin layout

172165-1
Brake connector

Pin. No.	Phase
1	+
2	−

Brake connector pin layout

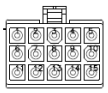

172171-1
(Encoder connector)

Pin No.	Signal Name	Pin No.	Signal Name
1	A	9	V
2	Z	10	U
3	B	11	W
4	B	12	W
5	Z	13	DC +5V
6	A	14	0V
7	U	15	SHIELD
8	U		

Encoder connector pin layout

Name	External Dimensions				Weight (kg)
	L	LM	LC	CB	
SB01A	122(162)	92(132)	52.5(52.3)	59.5(99.5)	0.82(1.4)
SB02A	136(176)	106(146)	66.5(66.3)	73.5(113.5)	1.08(1.66)
SB04A	164(199)	134(169)	94.5(94.3)	101.5(141.5)	1.58(2.16)

NOTE 1) Use DC 24 [V] for brake-opening power.

NOTE 2) The sizes in parentheses apply when attached to brakes.

NOTE 3) Option specification; Serial M-turn Encoder PinMap

<Serial S-turn Encoder Connector>

Pin No.	Phase	Pin No.	Phase
1	MA	6	−
2	$\overline{MA}$	7	+5V
3	SL	8	0V
4	$\overline{SL}$	9	SHIELD
5	−		

Plug : 172169-1(AMP)

<Serial M-turn Encoder Connector>

Pin No.	Phase	Pin No.	Phase
1	MA	6	GND_B
2	$\overline{MA}$	7	+5V
3	SL	8	0V
4	$\overline{SL}$	9	SHIELD
5	VDD_B		

Plug : 172169-1(AMP)

■ SC Series | XML-SC04A,SC03D, XML-SC06A,SC05D, XML-SC08A,SC06D, XML-SC10A,SC07D

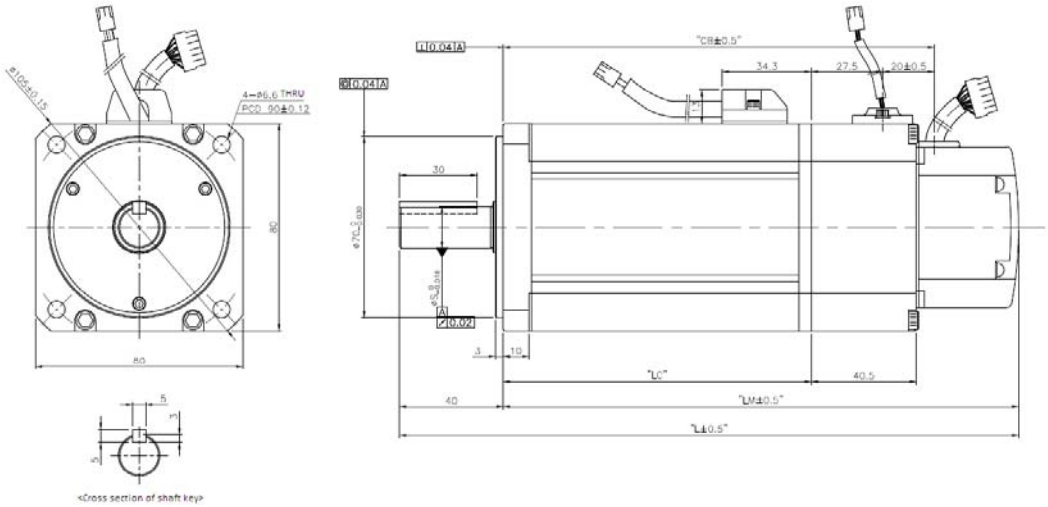

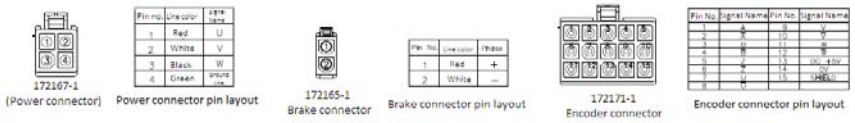

Name	External Dimensions					Weight (kg)
	L	LM	LC	CB	S	
SC04A, SC03D	158.5(198.8)	118.5(158.8)	79(78.8)	86(126.3)	14	1.88(2.92)
SC06A, SC05D	178.5(218.8)	138.5(178.8)	99(98.8)	106(146.3)	16	2.52(3.56)
SC08A, SC06D	198.5(238.8)	158.5(198.8)	119(118.8)	126(166.3)	16	3.15(4.22)
SC10A, SC07D	218.5(258.8)	178.5(218.8)	139(138.8)	146(186.3)	16	3.80(4.94)

NOTE 1) Use DC 24 [V] for brake-opening power

NOTE 2) The sizes in parentheses apply when attached to brakes

NOTE 3) Option specification; Serial M-turn Encoder PinMap

<Serial S-turn Encoder Connector>

Pin No.	Phase	Pin No.	Phase
1	MA	6	–
2	$\overline{MA}$	7	+5V
3	SL	8	0V
4	$\overline{SL}$	9	SHIELD
5	–		

Plug : 172169-1(AMP)

<Serial M-turn Encoder Connector>

Pin No.	Phase	Pin No.	Phase
1	MA	6	GND_B
2	$\overline{MA}$	7	+5V
3	SL	8	0V
4	$\overline{SL}$	9	SHIELD
5	VDD_B		

Plug : 172169-1(AMP)

■ SE Series | XML-SE09A, SE06D, SE05G, SE03M, XML-SE15A, SE11D,SE09G,SE06M, XML-SE22A, SE16D, SE13G, SE09M, XML-SE30A, SE22D, SE17G, SE12M

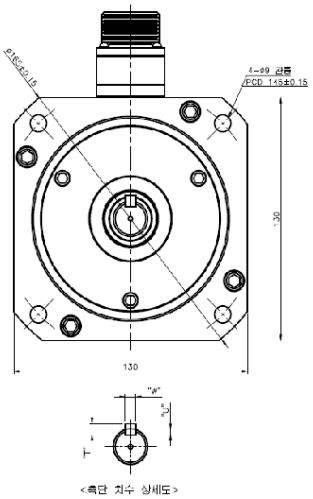

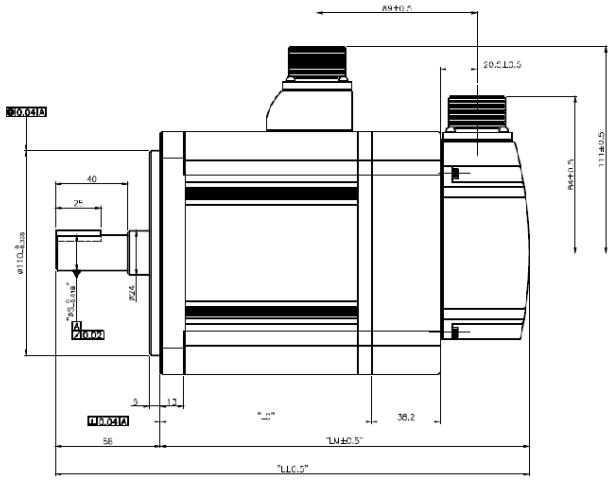

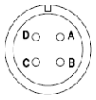

Plug specifications
MS3102A20-4P

Pin No.	Phase
A	U
B	V
C	W
D	Ground

Power Connector pin layout

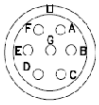

Plug specifications
MS3102A20-15P

핀넘버	신호명
A	U
B	V
C	W
D	섬시
E	BK+
F	BK-

Brake Plug pin layout

Plug specifications
MS3102A20-29P

Pin No.	Phase	Pin No.	Phase
A	A	M	V
B	A	N	V
C	B	P	W
D	B	R	W
E	Z	H	DC +5V
F	Z	G	0V
K	U	J	SHIELD
L	U		

Encoder Connector pin layout

Name	External Dimensions				Key Dimensions			Weight (kg)
	L	LM	LC	S	T	W	U	
SE09A, SE06D, SE05G, SE03M	201.3(239.3)	143.3(181.3)	93.8(93.6)	19	5	5	3	5.5(7.04)
SE15A, SE11D, SE09G, SE06M	225.3(263.3)	167.3(205.3)	117.8(117.6)	19	5	5	3	7.54(9.08)
SE22A, SE16D, SE13G, SE09M	249.3(287.3)	191.3(229.3)	141.8(141.6)	22	6	6	3.5	9.68(11.22)
SE30A, SE22D, SE17G, SE12M	273.3(311.3)	215.3(253.3)	165.8(165.6)	22	6	6	3.5	11.78(13.32)

NOTE 1) Use DC 24 [V] for brake-opening power

NOTE 2) . The sizes in parentheses apply when attached to brakes

NOTE 3) . Option specification; Serial M-turn Encoder PinMap

<Serial S-turn Encoder Connector>

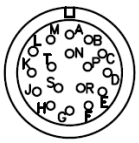

Pin No.	Phase	Pin No.	Phase
A	MA	M	-
B	MA	N	-
C	SL	P	-
D	SL	R	-
E	-	H	+5V
F	-	G	0V
K	-	J	SHIELD
L	-		

Plug : MS3102A20-29P

<Serial M-turn Encoder Connector>

Pin No.	Phase	Pin No.	Phase
A	MA	M	-
B	MA	N	-
C	SL	P	-
D	SL	R	-
E	VOD_B	H	+5V
F	GND_B	G	0V
K	-	J	SHIELD
L	-		

Plug : MS3102A20-29P

■ SF Series | XML-SF30A, SF22D, SF20G, SF12M, SF50A, LF35D, LF30G, SF20M, SF30M, LF30M,SF44G, SF44M

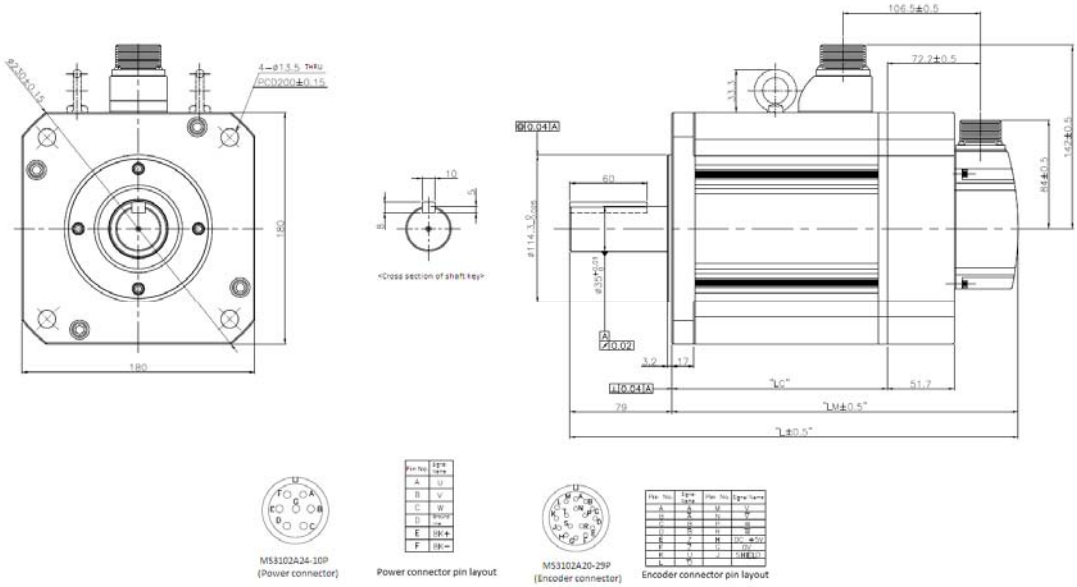

Name	External Dimensions			Weight (Kg)
	L	LM	LC	
SF30A, SF22D, SF20G, SF12M	261.5(312.9)	182.5(233.9)	133(132.7)	12.4(19.2)
SF50A, LF35D, LF30G, SF20M	295.5(346.9)	216.5(267.9)	167(166.7)	17.7(24.9)
SF55D, SF44G LF30M	345.5(396.9)	266.5(317.9)	217(216.7)	26.3(33.4)
SF44M	405.5(456.9)	326.5(377.9)	277(276.7)	35.6(42.8)

NOTE 1) Eye bolts apply to LF30M or higher models

NOTE 2) Use DC 24 [V] for brake-opening power.

NOTE 3) The sizes in parentheses apply when attached to brakes.

NOTE 4) . Option specification; Serial M-turn Encoder PinMap

<Serial S-turn Encoder Connector>

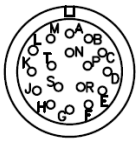

Pin No.	Phase	Pin No.	Phase
A	MA	M	–
B	MA	N	–
C	SL	P	–
D	SL	R	–
E	–	H	+5V
F	–	G	0V
K	–	J	SHIELD
L	–		

Plug : MS3102A20-29P

<Serial M-turn Encoder Connector>

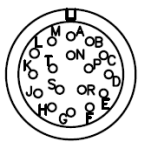

Pin No.	Phase	Pin No.	Phase
A	MA	M	–
B	MA	N	–
C	SL	P	–
D	SL	R	–
E	VOD_B	H	+5V
F	GND_B	G	0V
K	–	J	SHIELD
L	–		

Plug : MS3102A20-29P

■ SG Series | XML-SG22D, SG20G, SG12M, XML-LG35D, LG30G, SG20M, XML-SG55D, SG44G, LG30M, XML-SG44M

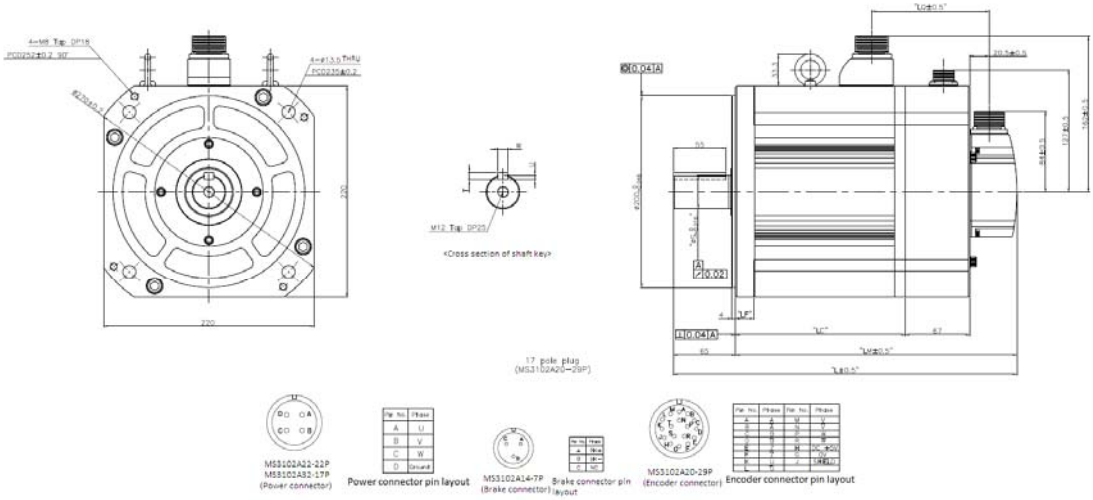

Name	External Dimensions			Weight (Kg)
	L	LM	LC	
SG22D, SG20G,SG12M	236.5(302.7)	171.5(237.7)	122(121.2)	16.95(30.76)
LG35D,LG30G,SG20M	256.5(322.7)	191.5(257.7)	142(142.2)	21.95(35.7)
SG55D, SG44G,LG30M	292.5(358.7)	227.5(293.7)	178(177.2)	30.8(44.94)
SG44M	320.5(386.7)	255.5(321.7)	206(205.2)	37.52(50.94)

NOTE 1) Use DC 90 [V] for brake-opening power.

NOTE 2) The sizes in parentheses apply when attached to brakes.

NOTE 3) . Option specification; Serial M-turn Encoder PinMap

<Serial S-turn Encoder Connector>

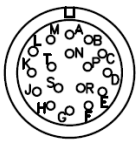

Pin No.	Phase	Pin No.	Phase
A	MA	M	–
B	MA	N	–
C	SL	P	–
D	SL	R	–
E	–	H	+5V
F	–	G	0V
K	–	J	SHIELD
L	–		

Plug : MS3102A20-29P

<Serial M-turn Encoder Connector>

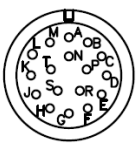

Pin No.	Phase	Pin No.	Phase
A	MA	M	–
B	MA	N	–
C	SL	P	–
D	SL	R	–
E	VOD_B	H	+5V
F	GND_B	G	0V
K	–	J	SHIELD
L	–		

Plug : MS3102A20-29P

■ XML-HB01A (Hollow Shaft), XML-HB02A (Hollow Shaft), XML-HB04A (Hollow Shaft)

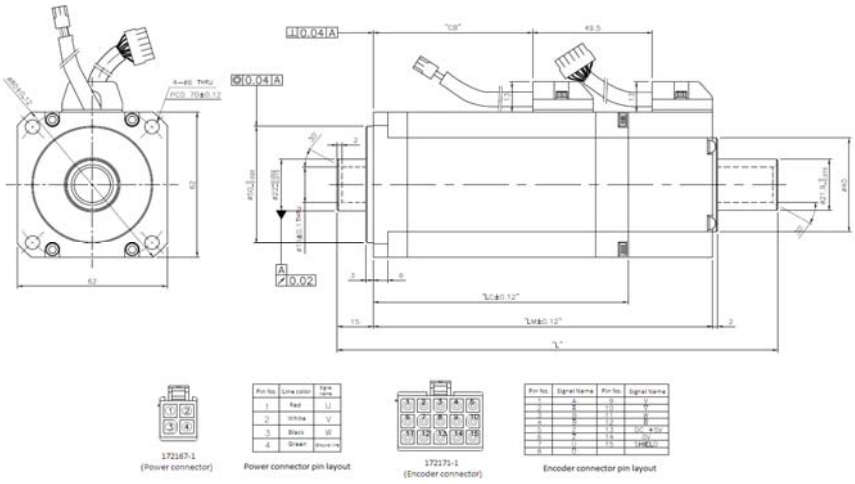

Name	External Dimensions					Weight (Kg)
	L	LM	LC	CB	Hollow Shaft Diameter	
HB01A	140.5	98.5	68.5	24	15	0.89
HB02A	154.5	112.5	82.5	38	15	1.16
HB04A	182.5	140.5	105.5	66	15	1.69

■ XML-HE09A (Hollow Shaft), XML-HE15A (Hollow Shaft)

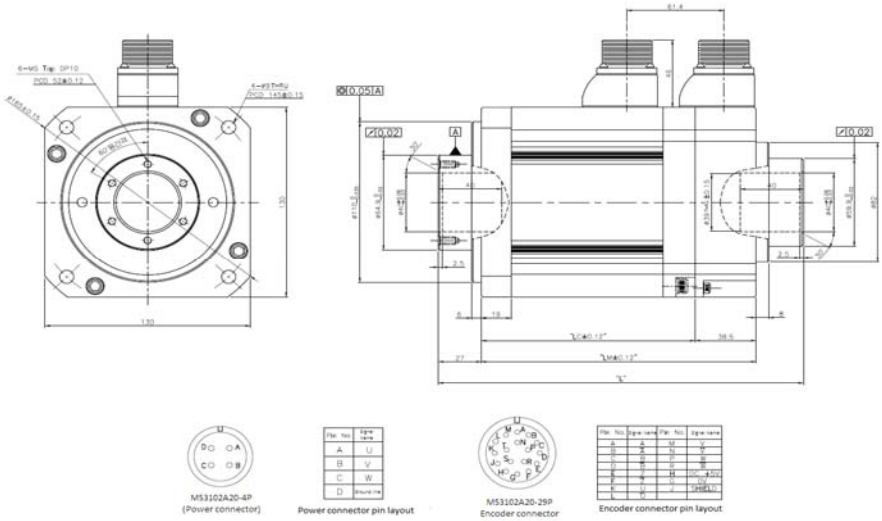

Name	External Dimensions				Weight (Kg)
	L	LM	LC	Hollow Shaft Diameter	
HE09A	207	150	111.5	40	5.82
HE15A	231	174	135.5	40	7.43

■ FB Series : XML-FB01A, XML-FB02A, XML-FB04A

(The drawing in the case of Rear Type cable, it is available on request)

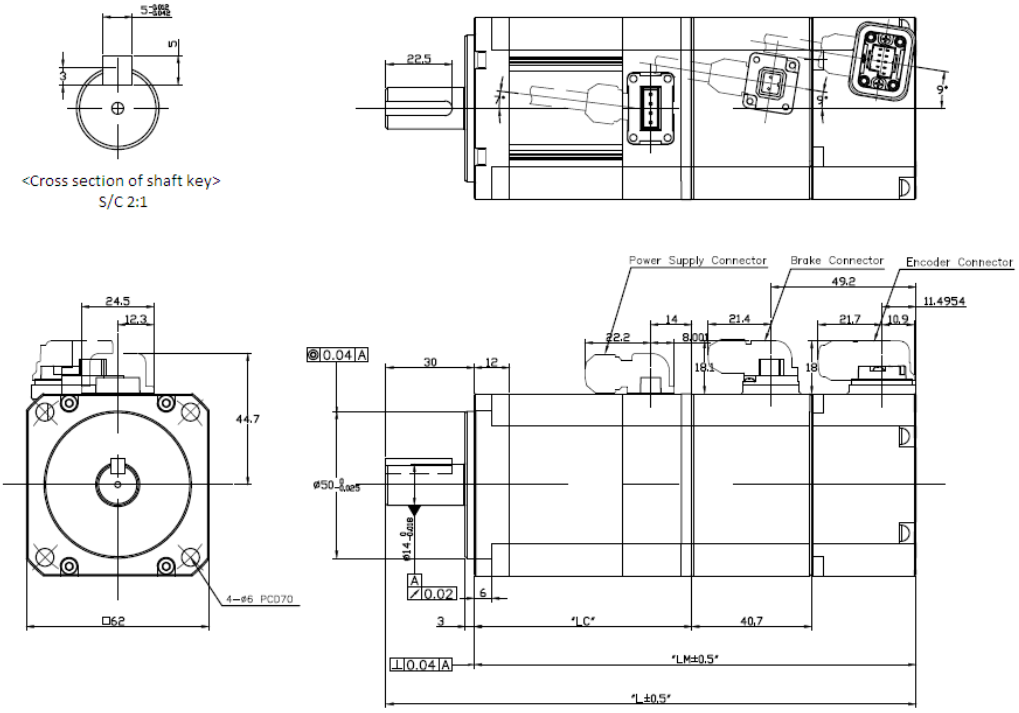

<Cross section of shaft key>
S/C 2:1

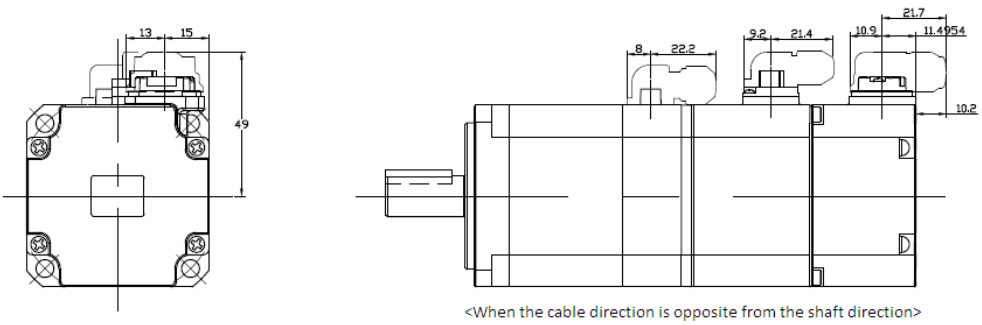

<When the cable direction is opposite from the shaft direction>

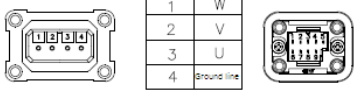

Pin No.	Signal Name
1	W
2	V
3	U
4	Ground line

Power connector pin layout

Single Turn (N)	
Pin No.	Signal Name
1	MA
2	SLO
3	–
4	0V
5	Shield
6	MA
7	SLO
8	–
9	+5V

Multi Turn (M)	
Pin No.	Signal Name
1	MA
2	SLO
3	GND_B
4	0V
5	Shield
6	MA
7	SLO
8	VDD_B
9	+5V

Encoder connector pin layout

Pin No.	Signal Name
1	B1
2	B2

Brake connector pin layout

Name	External Dimensions			Weight(kg)
	L	LM	LC	
FB01A	109(149.2)	79(119.2)	43.5(43)	0.72(1.3)
FB02A	120(160.2)	90(130.2)	54.5(54)	0.94(1.49)
FB04A	140(180.2)	110(150.2)	74.5(74)	1.32(1.87)

NOTE 1) Use DC power (24V) to operate the brake.

NOTE 2) The sizes in parentheses apply when attached to the brakes.

■ FC Series | XML-FC04A,FC03D, XML-FC06A,FC05D, XML-FC08A,FC06D, XML-FC10A,FC07D

(The drawing in the case of Rear Type cable, it is available on request)

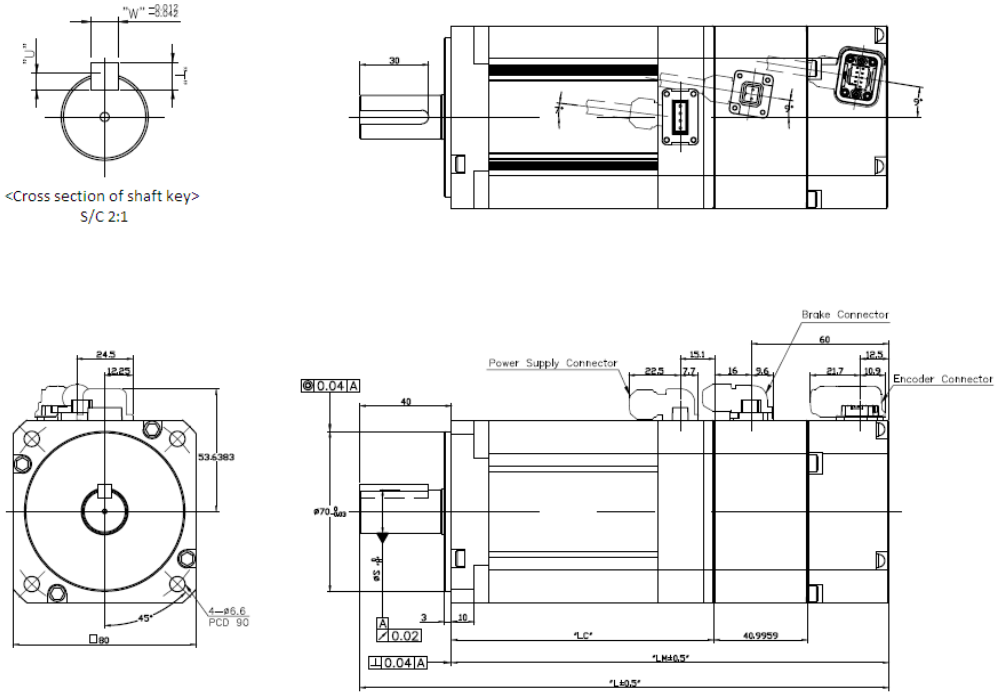

<Cross section of shaft key>
S/C 2:1

<When the cable direction is opposite from the shaft direction>

Pin No.	Signal Name
1	W
2	V
3	U
4	Ground line

Power connector pin layout

Single Turn (N)	
Pin No.	Signal Name
1	MA
2	SLO
3	–
4	0V
5	Shield
6	MA
7	SLO
8	–
9	+5V

Multi Turn (M)	
Pin No.	Signal Name
1	MA
2	SLO
3	GND_B
4	0V
5	Shield
6	MA
7	SLO
8	VDD_B
9	+5V

Encoder connector pin layout

Pin No.	Signal Name
1	B1
2	B2

Brake connector pin layout

Name	External Dimensions			Shaft, Key Dimensions					Weight(kg)
	L	LM	LC	S	H	T	W	U	
FC04A,FC03D	136.5(177)	96.5(137)	61(60.5)	14	-0.018	5	5	3	1.56(2.6)

FC06A,FC05D	154.5(195)	114.5(155)	79(78.5)	19	-0.021	6	6	3.5	2.18(3.22)
FC08A,FC06D	172.5(213)	132.5(173)	97(96.5)	19	-0.021	6	6	3.5	2.72(3.76)
FC10A,FC07D	190.5(231)	150.5(191)	115(114.5)	19	-0.021	6	6	3.5	3.30(4.34)

NOTE 3) Use DC power (24V) to operate the brake.

NOTE 4) The sizes in parentheses apply when attached to the brakes.

■ FE Series | XML-FE09A, FE15A, FE22A, FE30A, FE06D, FE11D, FE16D, FE22D, FE03M, FE06M, FE09M, FE12M, FE05G, FE09G, FE13G, FE17G

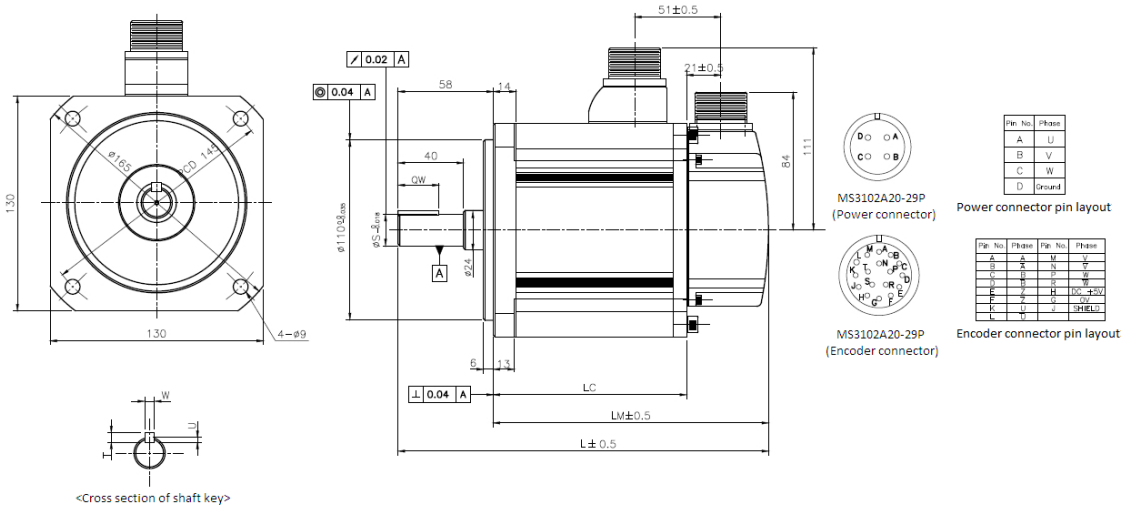

<Standard>

Name	External Dimensions				Key Dimensions				Weight(kg)
	L	LM	LC	S	QW	T	W	U	
FE09A,FE06D,FE05G,FE03M	197.3	139.3	89.8	19	25	5	5	3	5.04
FE15A,FE11D,FE09G,FE06M	217.3	159.3	109.8	19	25	5	5	3	6.74
FE22A,FE16D,FE13G,FE09M	237.3	179.3	129.8	22	25	6	6	3.5	8.48
FE30A,FE22D,FE17G,FE12M	255.3	197.3	147.8	24	36	7	8	4	10.05

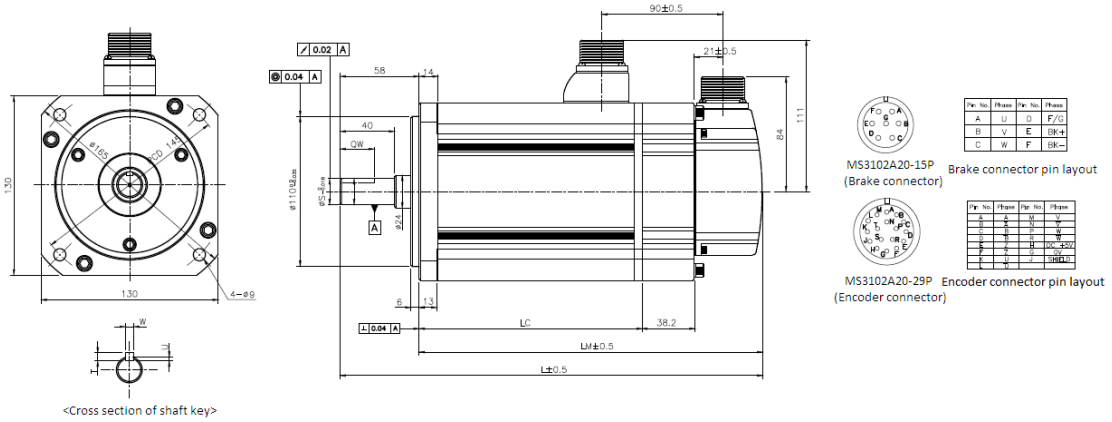

<Brake>

Name	External Dimensions				Key Dimensions				Weight(kg)
	L	LM	LC	S	QW	T	W	U	
FE09A,FE06D,FE05G,FE03M	235.3	177.3	89.6	19	25	5	5	3	6.58
FE15A,FE11D,FE09G,FE06M	255.3	197.3	109.6	19	25	5	5	3	8.28
FE22A,FE16D,FE13G,FE09M	275.3	217.3	129.6	22	25	6	6	3.5	10.02
FE30A,FE22D,FE17G,FE12M	293.3	235.3	147.6	24	36	7	8	4	11.59

NOTE 1) Use DC power (24V) to operate the brake.

■ FF Series | XML-FF30A, FF50A, FF22D, FF35D, FF20G, FF30G, FF44G, FF12M, FF20M, FF30M, FF44M

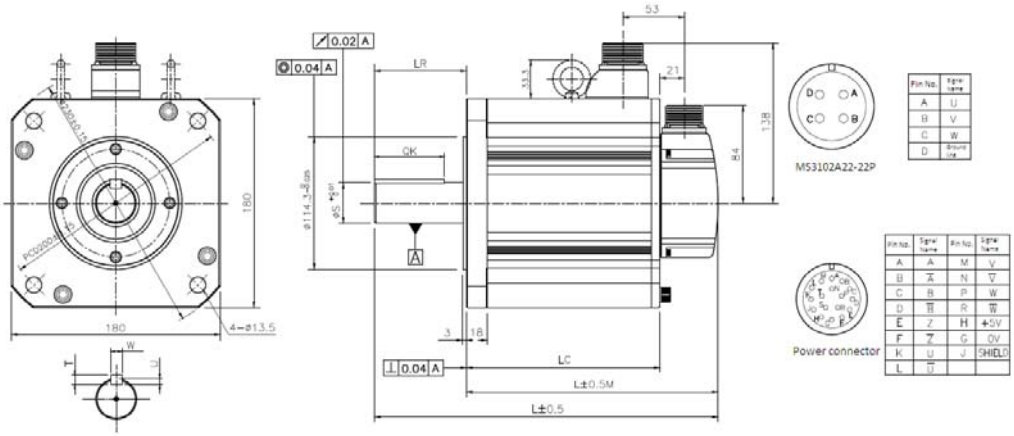

<Standard>

Name	External Dimensions					Key Dimensions				Weight(kg)
	L	LM	LC	LR	S	QK	T	W	U	
FF30A,22D,20G,12M	257.5	178.5	129	79	35	60	8	10	5	12.5
FF50A,35D,30G,20M	287.5	208.5	159							17.4
44G,30M	331.5	252.5	203							25.2
44M	384.5	305.5	256		42	60	8	12	5	33.8

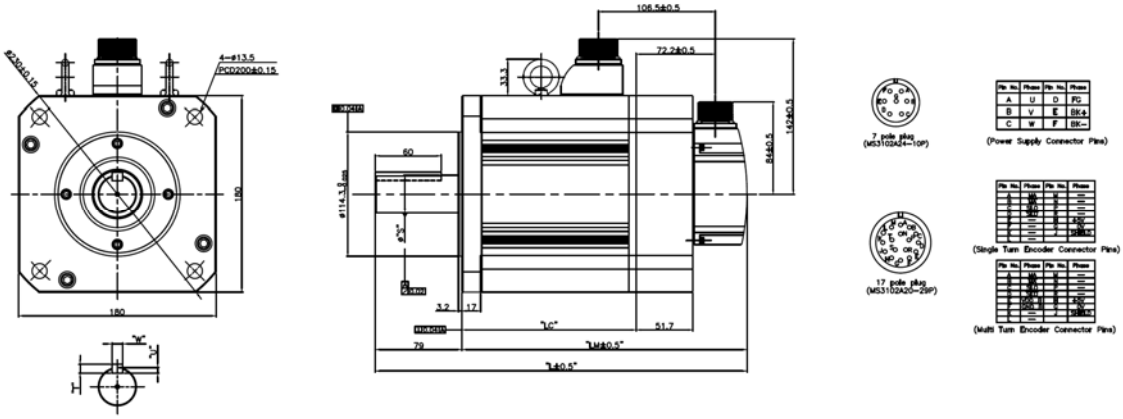

<Brake>

Name	External Dimensions				Key Dimensions			Weight(kg)
	L	LM	LC	LR	T	W	U	
FF30A,22D,20G,12M	308.9	229.9	128.7	35	8	10	5	19.7
FF50A,35D,30G,20M	338.9	259.9	158.7					24.6
44G,30M	382.9	303.9	202.7					32.4
44M	435.9	356.9	234.7	42	8	12	5	41.0

NOTE 1) Eye bolts apply to FF30M or higher models.

NOTE 2) Use DC power (24V) to operate the brake.

■ FG Series | XML-FG22D FG35D FG20G, FG30G, FG44G, FG12M, FG20M, FG30M, FG44M

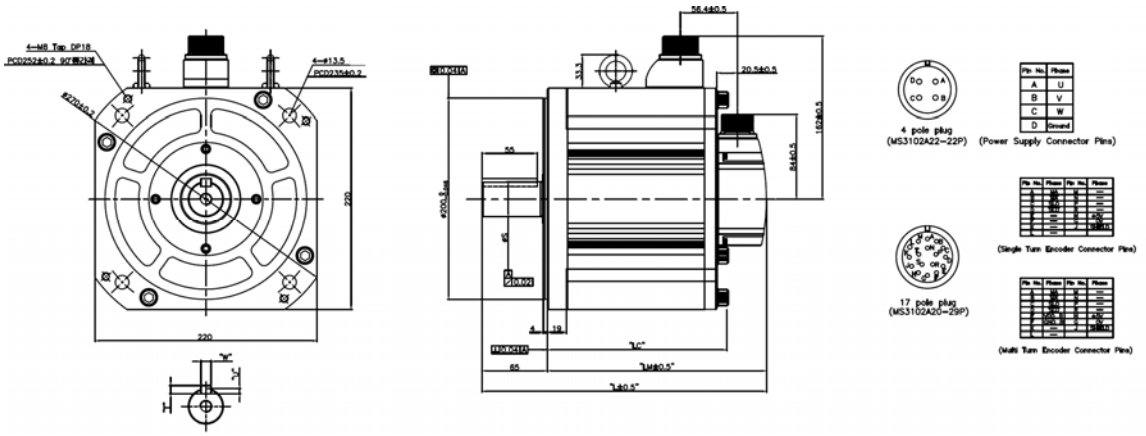

<Standard>

Name	External Dimensions				Key Dimensions			Weight(kg)
	L	LM	LC	S	T	W	U	
FG22D,FG20G,FG12M	229.5	164.5	115	35	8	10	5	15.42
FG35D,FG30G,FG20M	250.5	185.5	135					20.22
FG44G,FG30M	282.5	217.5	168					28.02
FG44M	304.5	239.5	190	42	8	12	5	33.45

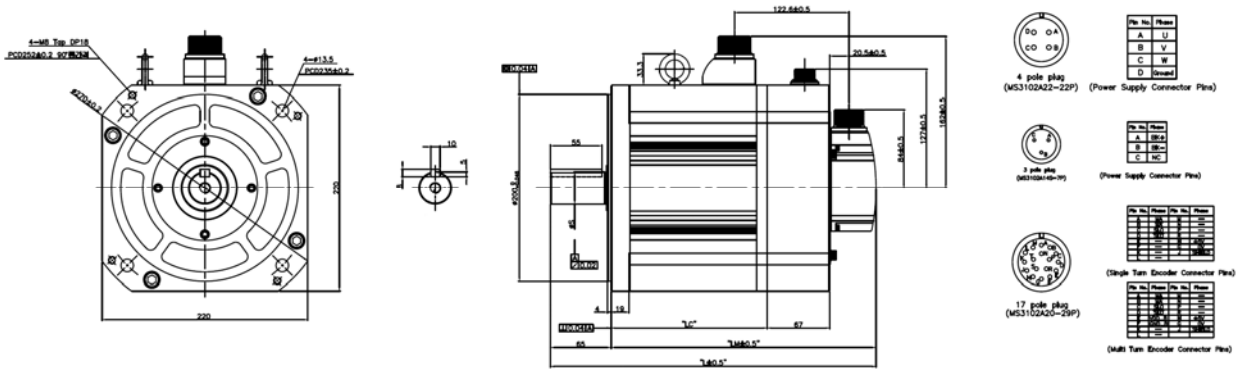

<Brake>

Name	External Dimensions				Key Dimensions			Weight (kg)
	L	LM	LC	S	T	W	U	
FG22D,FG20G,FG12M	295.7	230.7	114.2	35	8	10	5	29.23
FG35D,FG30G,FG20M	316.7	251.7	135.2					34.03
FG44G,FG30M	348.7	283.7	167.2					41.83
FG44M	370.7	305.7	189.2	42	8	10	5	47.26

NOTE 1) Use DC power (90V) to operate the brake.

■ FAL Series | XML-FALRA, FAL01A, FAL015A

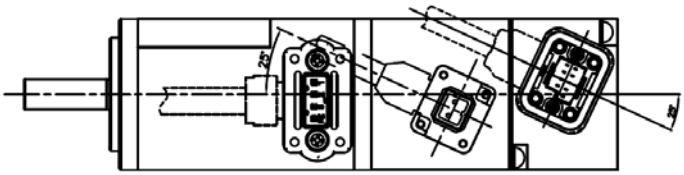

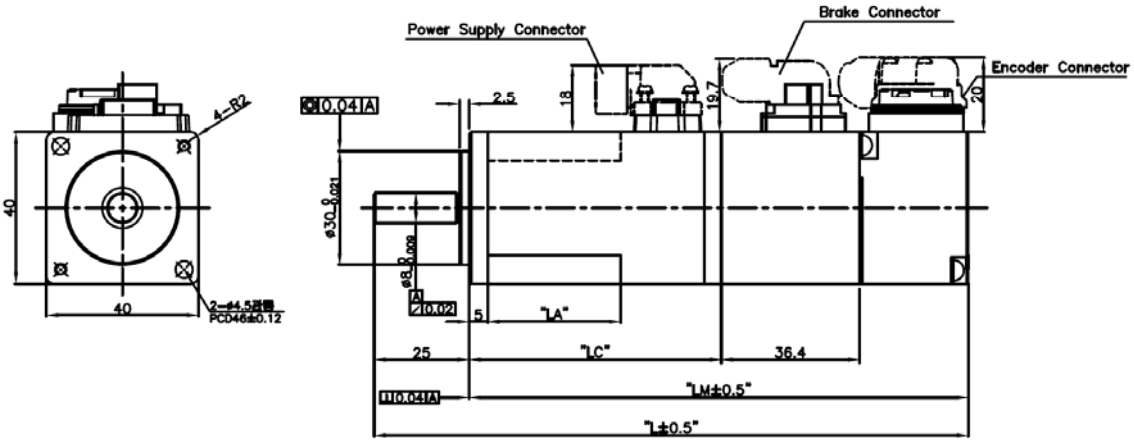

Pin No.	Signal name
1	U
2	V
3	W
PE	FG

<SM-JN8-04R/Suntone> <Power connector pin array>

<BASE ASSY : 2108418-1(Tyco)
HSG : 2108422-1(Tyco)
CONTACT : 2069391-2(Tyco)>

Multi Turn (M)		Multi Turn (M)	
Pin No.	Signal name	Pin No.	Signal name
1	MA	6	$\overline{MA}$
2	SLO	7	$\overline{SLO}$
3	GND_B	8	VDD_B
4	0V	9	+5V
5	Shield		

<Encoder connector pin array>

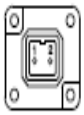

<JN4AT02PJM-R/Tyco>

Pin No.	Signal name
1	B1
2	B2

<Brake connector pin array>

Name	External Dimensions				Weight (kg)
	L	LM	LC	LA	
FALR5A	103.2(139.6)	78.2(114.6)	49.5	23	0.31(0.66)
FAL01A	120.2(156.6)	95.2(131.6)	66.5	35	0.45(0.80)
FAL015A	140.2	115.2	86.5	35	0.61

NOTE 1) Use DC power (24V) to operate the brake.

NOTE 2) The dimension of ( ) is for brake type motor.

NOTE 3) To connect FAL motor, connect power cable first.

■ FBL Series | XML-FBL01A, FBL02A, FBL04A

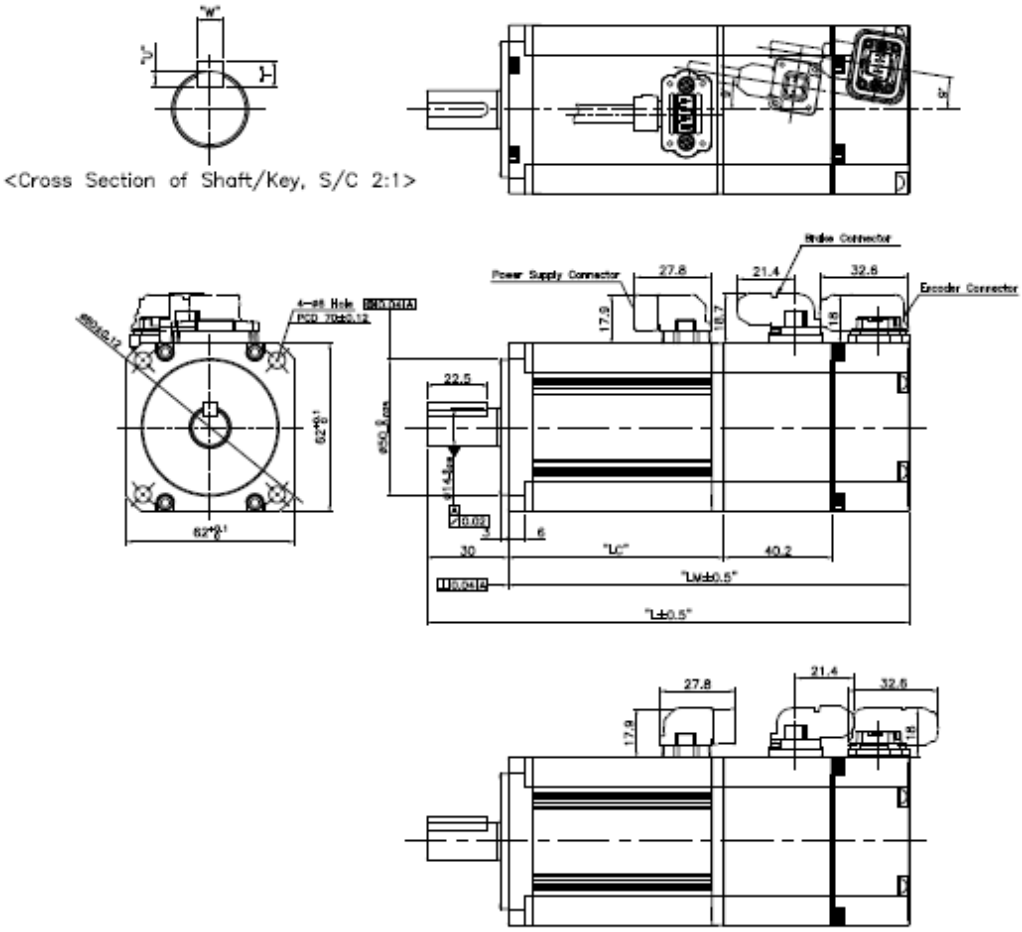

<In the case that extraction direction of cable is on the opposite direction of Axis>

<SM-JN8-04R/Suntone>

Pin No.	Signal name
1	U
2	V
3	W
PE	FG

<Power connector pin array>

<BASE ASSY : 2108418-1(Tyco)
HSG : 2108422-1(Tyco)
CONTACT : 2069391-2(Tyco)>

Multi Turn (M)		Multi Turn (M)	
Pin No.	Signal name	Pin No.	Signal name
1	MA	6	$\overline{MA}$
2	SLO	7	$\overline{SLO}$
3	GND_B	8	VDD_B
4	0V	9	+5V
5	Shield		

<Encoder connector pin array>

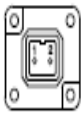

<JN4AT02PJM-R/Tyco>

Pin No.	Signal name
1	B1
2	B2

<Brake connector pin array>

Name	External Dimensions					Key Dimensions			Weight (kg)
	L	LM	LC	S	H	T	W	U	
FBL01A	107.2(147.2)	77.2(117.2)	48.5(48.3)	14	-0.018	5	5	3	0.56(1.3)
FBL02A	118.2(158.2)	88.2(128.2)	59.5(59.3)	14	-0.018	5	5	3	0.74(1.48)
FBL04A	138.2(178.2)	108.2(148.2)	79.5(79.3)	14	-0.018	5	5	3	1.06(1.8)

NOTE 1) Use DC power (24V) to operate the brake.

NOTE 2) The dimension of ( ) is for brake type motor.

■ FCL Series | XML-FCL04A, FCL03D, FCL06A, FCL05D, FCL08A, FCL06D, FCL10A, FCL07D

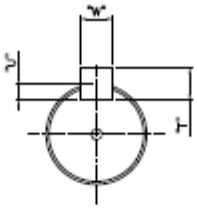

<Cross Section of Shaft/Key, S/C 2:1>

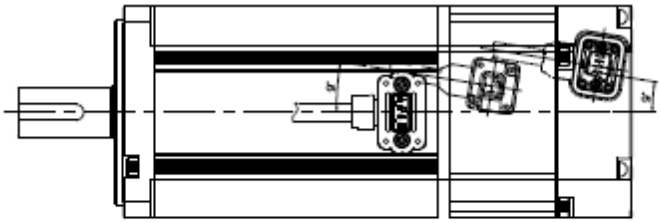

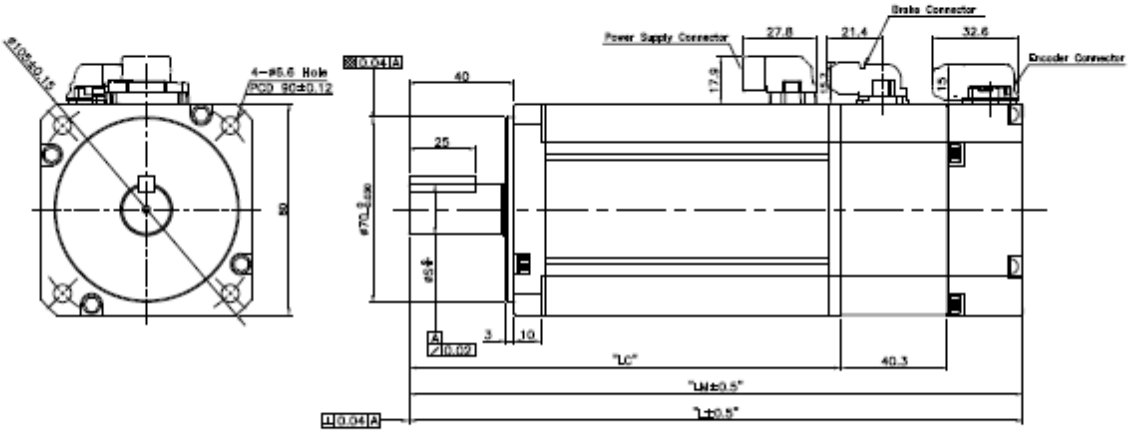

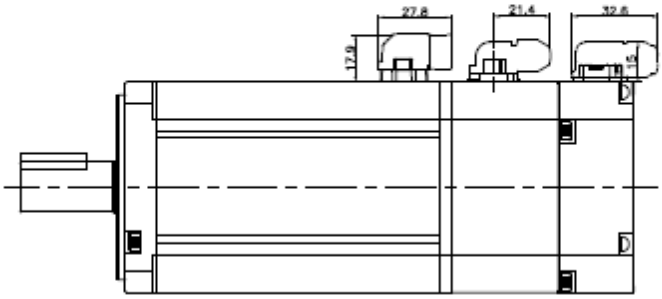

<In the case that extraction direction of cable is on the opposite direction of Axis>

<SM-JN8-04R/Suntone>

Pin No.	Signal name
1	U
2	V
3	W
PE	FG

<Power connector pin array>

<BASE ASSY : 2108418-1(Tyco)
HSG : 2108422-1(Tyco)
CONTACT : 2069391-2(Tyco)>

Multi Turn (M)		Multi Turn (M)	
Pin No.	Signal name	Pin No.	Signal name
1	MA	6	$\overline{MA}$
2	SLO	7	$\overline{SLO}$
3	GND_B	8	VDD_B
4	0V	9	+5V
5	Shield		

<Encoder connector pin array>

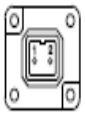

<JN4AT02PJM-R/Tyco>

Pin No.	Signal name
1	B1
2	B2

<Brake connector pin array>

Name	External Dimensions					Key Dimensions			Weight(kg)
	L	LM	LC	S	H	T	W	U	
FCL04A,FCL03D	138.7(179.5)	98.7(139.5)	70(69.8)	14	-0.018	5	5	3	1.52(2.32)/1.26(2.06)
FCL06A,FCL05D	156.7(197.5)	116.7(157.5)	88(87.8)	19	-0.021	6	6	3.5	2.14(2.94)/2.12(2.92)
FCL08A,FCL06D	174.7(215.5)	134.7(175.5)	106(105.8)	19	-0.021	6	6	3.5	2.68(3.48)/2.66(3.46)
FCL10A,FCL07D	192.7(233.5)	152.7(193.5)	124(123.8)	19	-0.021	6	6	3.5	3.30(4.10)/2.78(3.58)

NOTE 1) Use DC power (24V) to operate the brake.

NOTE 2) The dimension of ( ) is for brake type motor.

7.2 Servo Drive

7.2.1 Product Features

Item \ Type Name			XDL-L7□A 001□	XDL-L7□A 002□	XDL-L7□A 004□	XDL-L7□A 008□	XDL-L7□A 010□	XDL-L7□A 020□	XDL-L7□A 035□	XDL-L7□A 050□
Input power	Main power		3-phase AC 200-230 [V] (-15~10[%]), 50-60 [Hz]							
	Control power		Single-phase AC 200-230 [V] (-15~10[%]), 50-60 [Hz]							
Rated current [A]			1.4	1.7	3.0	5.2	6.75	13.5	16.7	32
Peak current [A]			4.2	5.1	9.0	15.6	20.25	40.5	50.1	96
Encoder Type			Quad. Type incremental line driver 2000-10000 [P/R] Serial 17 / 19 bit / 21 bit							
Control performance	Speed Control	Speed control range	Maximum 1: 5000							
		Frequency response	Maximum 1 [kHz] or above (when the 19-bit serial encoder is applied).							
		Speed command	DC –10 [V]~+10 [V] (Reverse rotation in case of negative voltage)							
		Acceleration/deceleration time	Straight or S-curve acceleration/deceleration (0-10,000 [ms], possible to be set by one [ms] unit)							
		Speed change rate	±0.01 [%] or lower [when load changes between 0 and 100%] ±0.1[%] or lower [temperature 25 ±10℃]							
	Position Control	Input frequency	1 [Mpps], line driver / 200 [kbps], open collector							
		Input pulse Method	Symbol + pulse series, CW+CCW, A/B phase							
		Electric Gear Ratio	Four digital gear ratios can be set, selected and tuned.							
	Torque Control	Torque command	DC –10~+10 [V] (Reverse direction torque in case of negative voltage)							
		Speed limit	DC 0~10 [V], internal speed command within ±1[%]							
		Repetition accuracy	Within ±1[%]							
Input/output signal	Analog Input	Input range	DC -10~10 [V]							
		Angular resolution	12 [bit]*							
	Analog Output	Output range	DC-1 0~10 [V]							
		Angular resolution	12 [bit]							

Item \ Type Name		XDL-L7□A 001□	XDL-L7□A 002□	XDL-L7□A 004□	XDL-L7□A 008□	XDL-L7□A 010□	XDL-L7□A 020□	XDL-L7□A 035□	XDL-L7□A 050□
	Digital input	A total of 10 input channels (allocable) SVON, SPD1, SPD2, SPD3, ALMRST, DIR, CCWLIM, CWLIM, EMG, STOP, EGEAR1, EGEAR2, PCON, GAIN2, P_CLR, T_LMT, MODE, ABS_RQ, ZCLAMP You can selectively allocate a total of 19 functions. You can set the positive/negative logic of the selected signal.							
	Digital output	A total of 5 channels (allocable), 3 channels (fixed with alarm codes) ALARM, READY, ZSPD, BRAKE, INPOS, TLMT, VLMT, INSPD, WARN You can selectively allocate a total of nine kinds of output. You can set the positive/negative logic of the selected signal.							
Communication	RS422	Accessible to PC software and the RS422 server							
	USB	Status monitoring through PC software, JOG operation, and parameter uploading/downloading are possible.							
Encoder		Serial BiSS encoder and quadrature encoder supported							
Encoder output method		Random pre-scale output through FPGA (maximum 6.4 Mpps)							
Built-in functions	Dynamic braking	Standard built-in (activated when the servo alarm goes off or when the servo is off)							
	Regenerative braking	Both default built-in and external installation possible							
	Displaying	Seven segments (5 DIGIT)							
	Self-setting	Loader (SET, MODE, UP, and [DOWN] keys)							
	Add-on functions	Auto gain tuning, phase Z detection, manual JOG operation, program JOG operation, automatic analog input calibration							
	Protection function	Overcurrent, overload, overvoltage, voltage lack, main power input error, control power input error, overspeed, motor cable, heating error (power module heating, drive temperature error), encoder error, excessive regeneration, sensor error, communication error							
Environment	Temperature	0 ~ 50[℃]							
	Humidity	90[%] RH or lower (no condensation)							
	Environment	Indoors, a place free from corrosive gas or combustible gas, or a place without liquid or conductive dust.							

7.2.2 Outline Drawing

■ XDL-L7□A001□ ~ XDL-L7□A004□

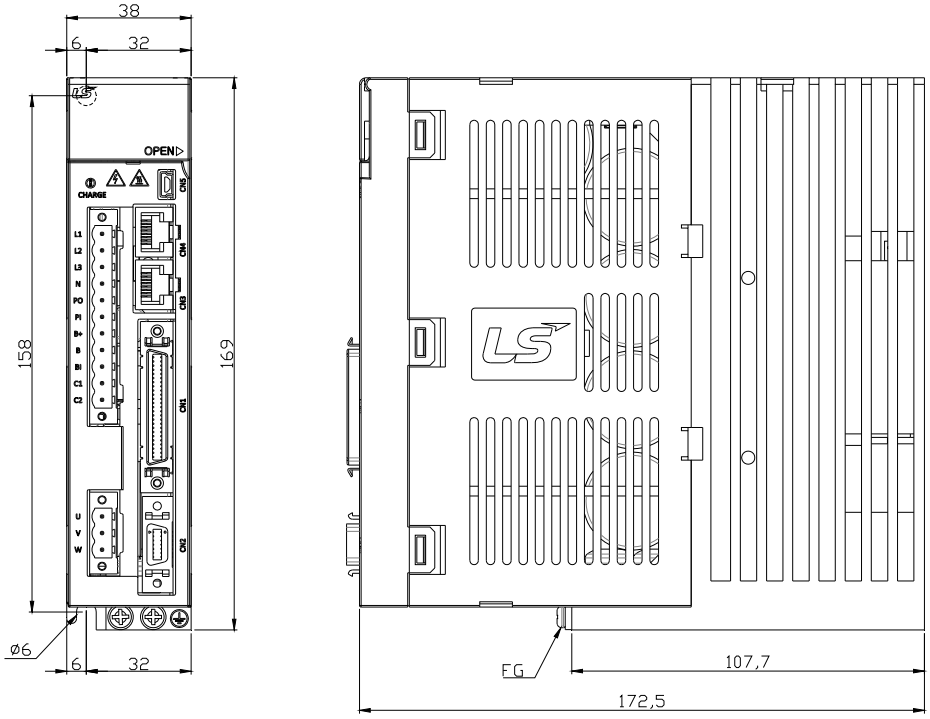

★ **Weight: 1.0[kg]**

■ XDL-L7□A008□ / XDL-L7□A010□

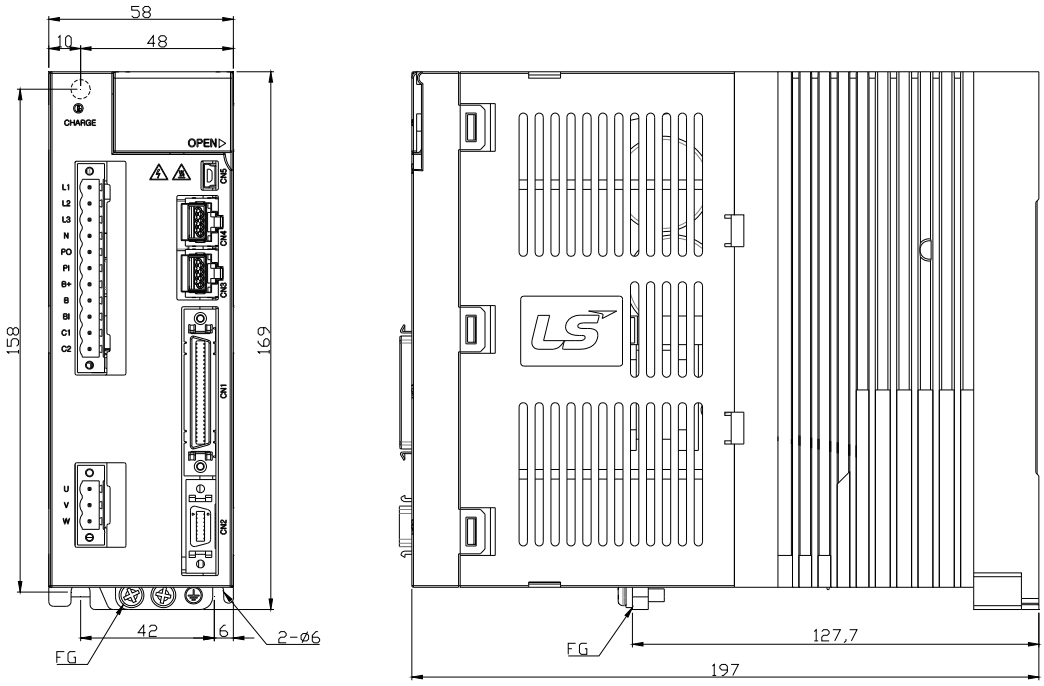

★ **Weight: 1.5[kg](Cooling fan included)**

■ XDL-L7□A020□ / XDL-L7□A035□

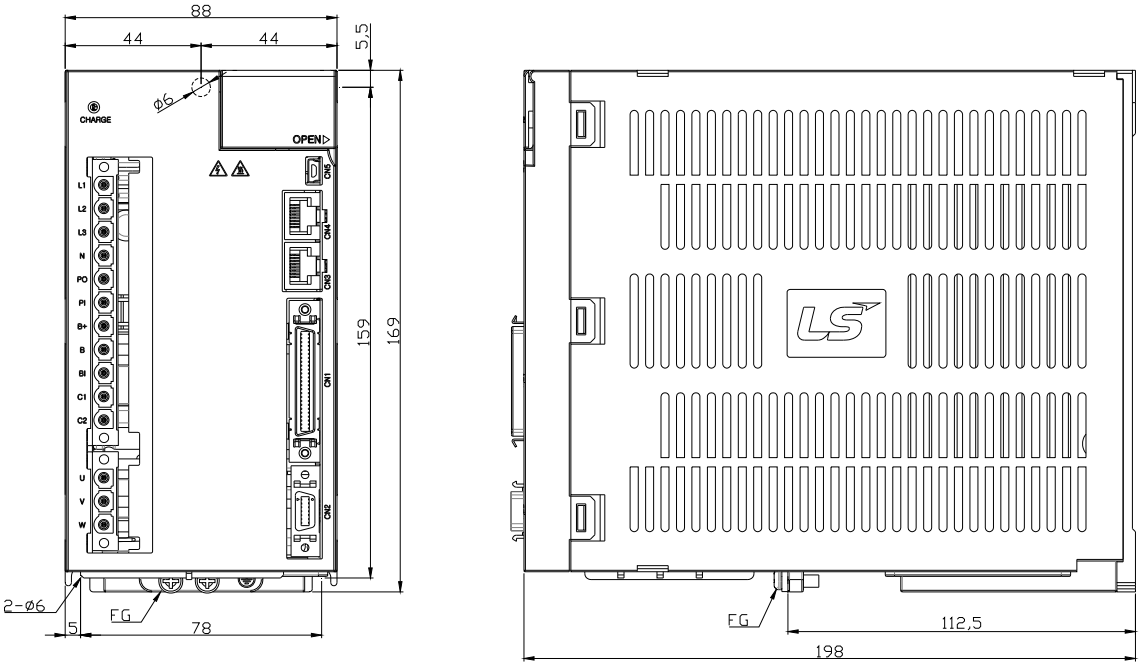

★ **Weight: 2.5[kg](Cooling fan included)**

■ XDL-L7□A050□

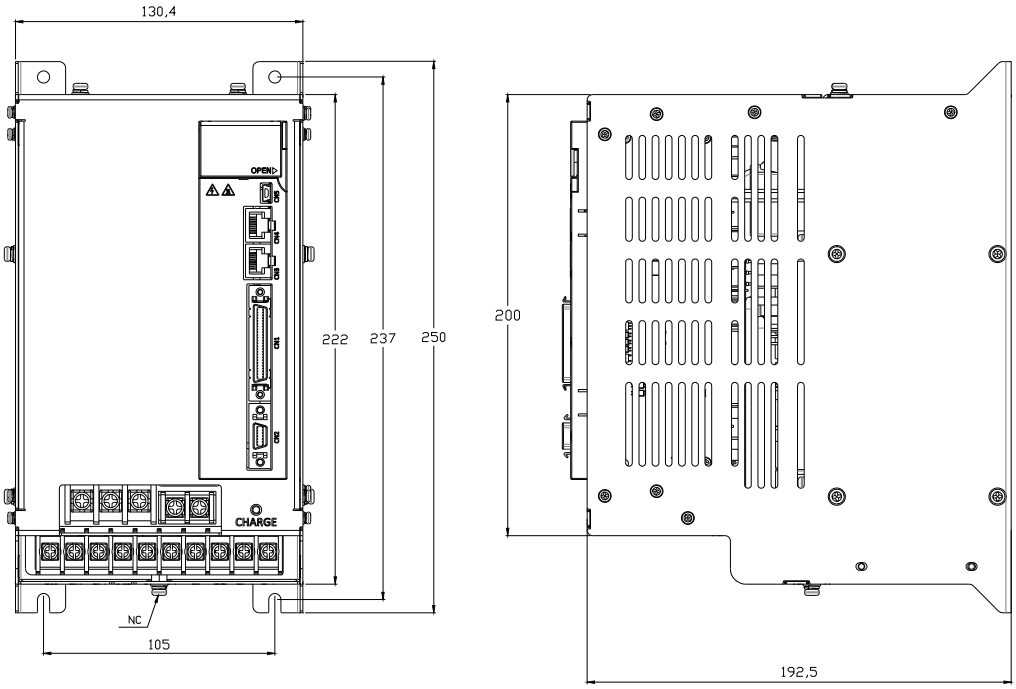

★ **Weight: 5.5[kg](Cooling fan included)**

7.3 Options and Peripheral Devices

■ Option (incremental encoder cable)

Category	Product Name	Type Name (Note 1)	Applicable Motors	Specifications
For signaling	Quadrature type Incremental Encoder cable (small capacity)	XLCS-E□□□AS	All models of XML-SA, XML-SB, XML-SC and XML-HB Series	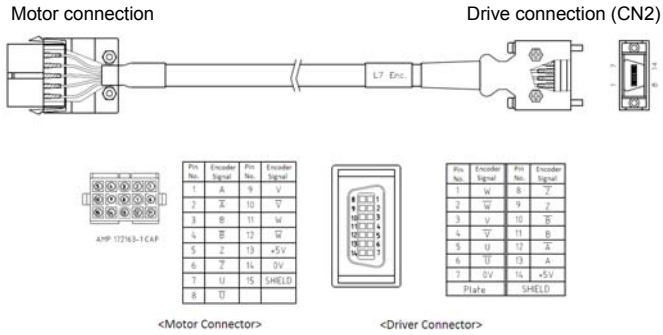 **1.** Motor connection **a.** Cap specifications (15 positions): 172163-1 (AMP) **b.** Socket specifications: 170361-1 (AMP) **2.** Drive connection (CN2) **a.** Case specifications: 10314-52A0-008 (3M) **b.** Connector specifications: 10114-3000VE (3M) **c.** Cable specifications: 7Px0.2SQ (AWG24)
For signaling	Quadrature type Incremental Encoder cable (medium capacity)	XLCS-E□□□DS	All models of XML-SE, XML-SF, XML-LF, APL-LG, XML-SG and XML-HE Series	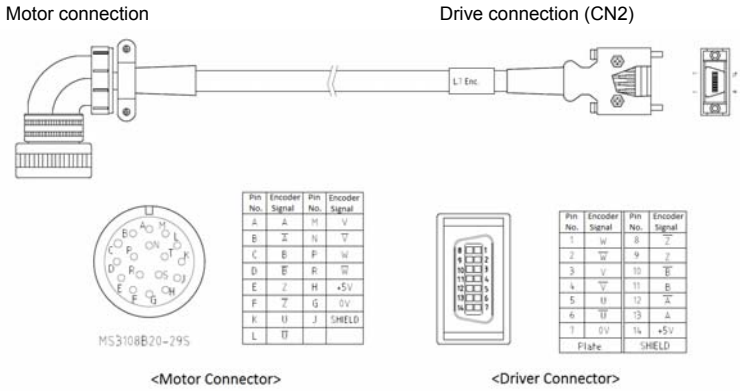 **1.** Motor connection (MS: Military Standard) **a.** Plug specifications: MS3108B (MS3106B) 20-29S **2.** Drive connection (CN2) **a.** Case specifications: 10314-52A0-008 (3M) or SM-14J(Suntone) **b.** Connector specifications: 10114-3000VE (3M) orSM-14J(Suntone) **3.** Cable specifications: 7Px0.2SQ or 7Px24AWG

NOTE 1) The □□□ in Type Name indicates the type and length of each cable. Refer to the table below for how to display them.

Cable length (m)	3	5	10	20
Robotic cable	F03	F05	F10	F20
General cable	N03	N05	N10	N20

■ Option (serial encoder cable)

Category	Product Name	Type Name (Note 1)	Applicable Motors	Specifications
For signaling	Serial type Encoder cable (small capacity)	XLCS-E□□□CS	All models of XML-SA, (Will provide) XML-SB and XML-SC Series	Motor connection / Drive connection (CN2) 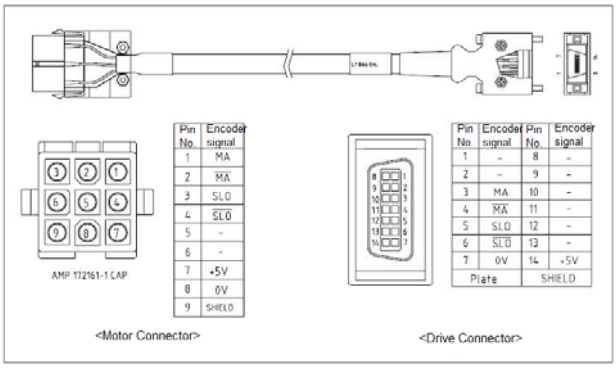 **1.** Motor connection **a.** Cap specifications (9 positions): 172161-1 (AMP) **b.** Socket specifications: 170361-1 (AMP) **2.** Drive connection (CN2) **a.** Case specifications: 10314-52A0-008 (3M) **b.** Connector specifications: 10114-3000VE (3M) **3.** Cable specifications: 4Px0.2SQ (AWG24)
For signaling	Multi turn type Encoder cable (Small capacity)	XLCS-E□□□CS1	All models of XML-SA, (Will provide) XML-SB XML-SC SERIES	Motor connection / Drive connection (CN2) 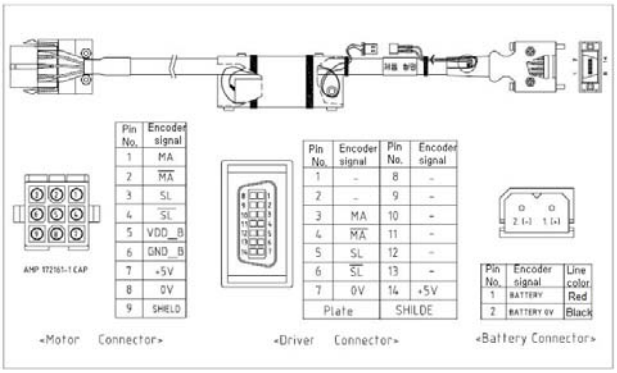 **1.** Motor connection a. Cap specifications:(9Position): 172161-1(AMP) b. SOCKET specifications: 170361-1(AMP) **2.** Drive connection (CN2) a. Case specifications: 10314-52A0-008(3M) or SM-14J(Suntone) b. Connector specifications:10114-3000VE(3M) or SM-14J(Suntone) **3.** specifications: 4Px0.2SQ or 4Px24AWG

For signaling	Encoder cable for flat type motor (small capacity)	XLCS-E□□□ES *Front : XLCS-E□□□ES * Rear : XLCS-E□□□ES-R	All models of XML-FB and XML-FC Series	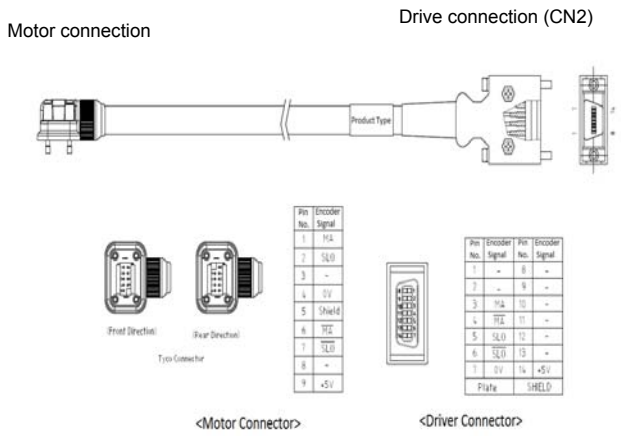 **1.** Motor connection **a.** Cap specifications: 2201825-1 (Tyco) **b.** Socket specifications: 2174065-1(Tyco) **2.** Drive connection(CN2) **a.** Case specifications: 10314-52A0-008(3M) **b.** Connector specifications: 10114-3000VE(3M) **3.** Cable specifications: 4Px0.2SQ(AWG24)
For signaling	Multi turn Type Serial Encoder Cable	XLCS-E□□□ES1-□ *Front : XLCS-E□□□ES1 * Rear : XLCS-E□□□ES1-R	All models of XML-FB and XML-FC Series	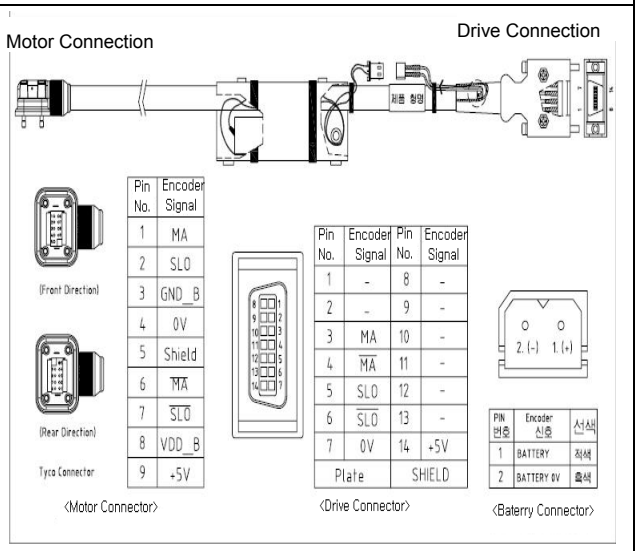 **1.** Motor connection **a.** Cap specifications(9 Position): 2201825-1(Tyco) **b.** Socket specifications: 2174065-4(Tyco) **2.** Drive connection(CN2) **a.** Case specifications: 10314-52A0-008(3M) **b.** Connector specifications: 10114-3000VE(3M) **3.** Cable specifications : 4Px0.2SQ(AWG24) or 4Px24AWG

For signaling	Serial Type Encoder Cable (Medium capacity)	XLCS-E□□□DS	All models of XML-SE XML-SF XML-SG XML-LF XML-LG XML-FE XML-FF XML-FG SERIES	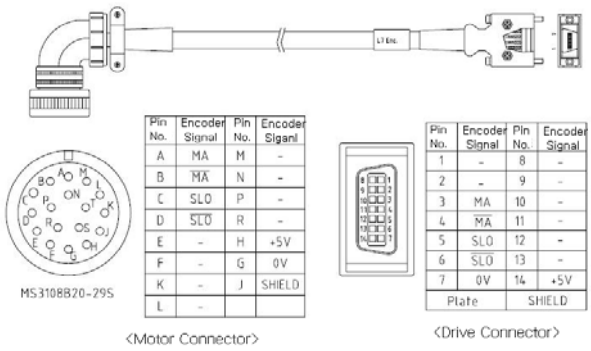 **1.** Motor connection ((MS:Military Standard)) **a**. Plug specifications: MS3108B(MS3106B) 20-29S **2**. Drive connection(cn2) **a**. U, V and W pin specifications:2012 **b**. Case specifications: 10314-52A0-008(3M) or SM-14J(Suntone) **3**. Cable specifications: 4Px0.2SQ or 4Px24AWG
For signaling	Multi turn Type Serial Encoder Cable (Medium capacity)	XLCS-E□□□DS1	XML-SE , XML-SF, XML-SG, XML-LF, XML-LG, XML-FE, XML-FF and XML-FG Series	Motor Connection Drive Connection 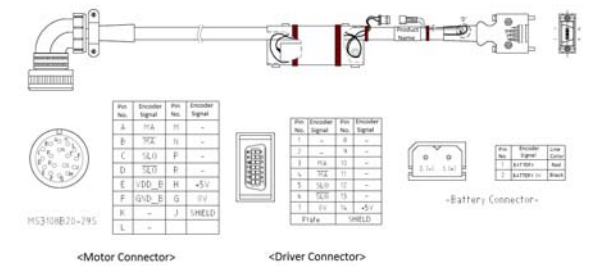 **1.** Motor connection **a.** Cap specifications(9Position):MS3108B 20-29S **2.** Drive connection(CN2) **a.** Case specifications: 10314-52A0-008(3M) or SM-14J(Suntone) **b.** Connector specifications: 10114-3000VE(3M) SM-14J(Suntone) **3.** Cable specifications: 4Px0.2SQ(AWG24)

NOTE 1) The □□□ in Type Name indicates the type and length of each cable. Refer to the table below for how to display them.

Cable length (m)	3	5	10	20
Robotic cable	F03	F05	F10	F20
General cable	N03	N05	N10	N20

■ Option (power cable)

Category	Product Name	Type Name (Note 1)	Applicable Motors	Specifications
For power	Standard type Power cable	XLCS-P□□□GS	All models of XML-SA, XML-SB, XML-SC and XML-HB Series	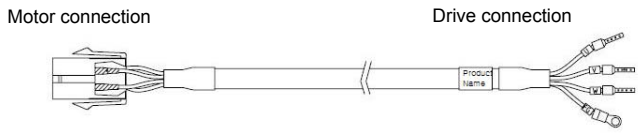 Content / Signal / Pin No. Lead Wire: U 1; V 2; W 3 Ground Line: Ground 4 <Motor Connection> **1.** Motor connection **a.** Cap specifications (4 positions): 172159-1 (AMP) **b.** Socket specifications: 170362-1 (AMP) **2.** Drive connection (U, V, W, and FG) **a.** U,V and W pin specifications: UA-F1512 (SEOIL) **b.** FG pin specifications: 1.5x4 (ring terminal) **3.** Cable specifications: 4Cx0.75SQ (AWG18) (XML-SAR3A, SAR5A, and SA01A use 0.5SQ)
For power	Brake type Power cable	XLCS-P□□□KB (new)	All models of XML-SA, XML-SB and XML-SC Series	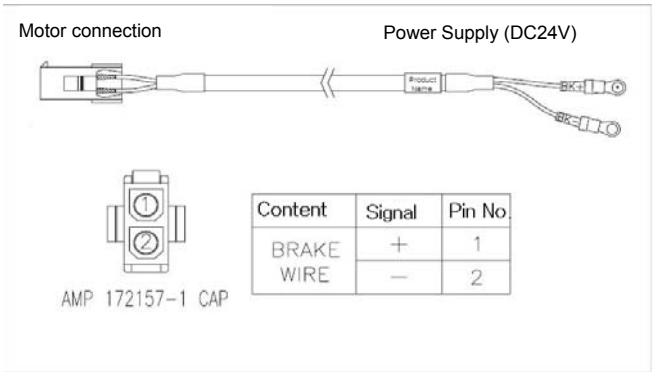 Content / Signal / Pin No. BRAKE WIRE: + 1; − 2 **1.** Motor connection **a.** Cap specifications (6 positions): 172157-1 (AMP) **b.** Socket specifications: 170362-1 (AMP) **2.** For brake power **a.** Connection terminal specifications: 1.5x3 (KET GP110012) **b.** Cable specifications: 2Cx0.75SQ (AWG18)

Category	Product Name	Type Name (Note 1)	Applicable Motors	Specifications
For power	Standard type Power cable	XLCS-P□□□HS	All models of XML-SE and XML-HE Series	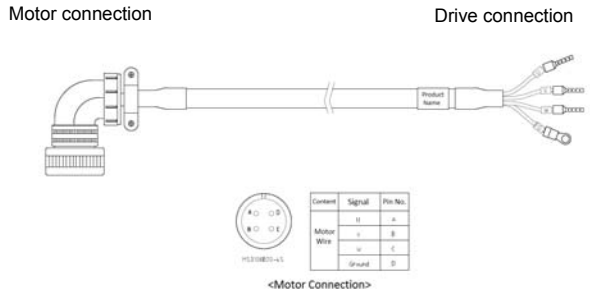 **1.** Motor connection (MS: Military Standard) **a.** Plug specifications: MS3108B (MS3106B) 20-4S **2.** Drive connection (U, V, W, and FG) **a.** U, V and W pin specifications: UA-F2512 **b.** FG pin specifications: 2.5x4 (ring terminal) **3.** Cable specifications: 4Cx2.0SQ (AWG14) Note: The drive end connection of the XML-SE03M Series cable uses the UA-F1512 pin.
For power	Power cable (Brake type)	XLCS-P□□□NB	All models of XML-SE XML-FE SERIES	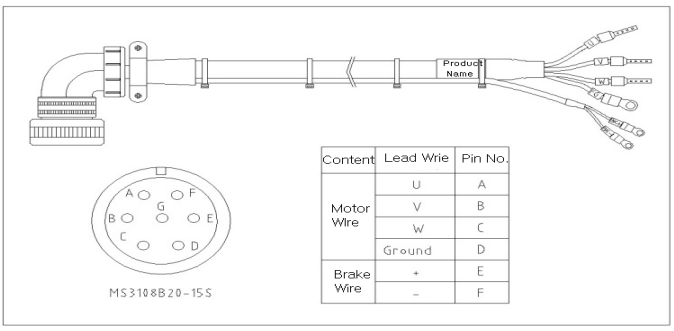 **1.** Motor connection **a**. Plug specifications: MS3108B20-15S (MS) **2**. Drive connection **a**. U, V and W pin specifications:2012 **b**. Cable specifications: 4C x 2.5SQ or 4C x 12AWG **c**. FG pin specifications: 2.5 x 4(Ring Terminal) **3**. Brake power connection **a**. BK pin specifications : 1.5 x 3(Ring Terminal) **b**. Cable specifications: 2C x 0.75SQ or 2C x 18AWAG

Category	Product Name	Type Name (Note 1)	Applicable Motors	Specifications
For power	Standard type Power cable	XLCS-P□□□IS	XML-SF XML-SG XML-FF XML-FG SERIES Below 3.5KW	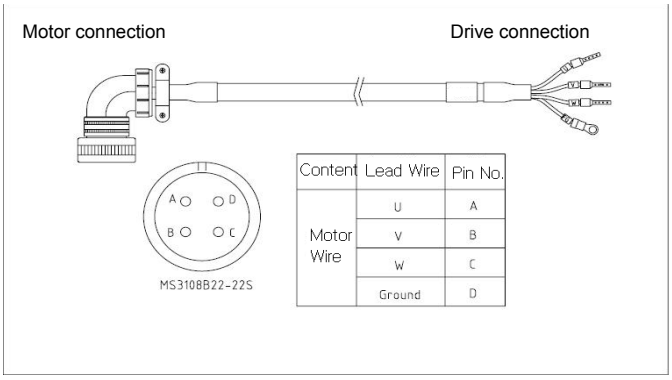 **1.** Motor connection (MS: Military Standard) **a.** Plug specifications: MS3108B (MS3106B) 22-22S **2.** Drive connection (U, V, W, and FG) **a.** U, V and W pin specifications: UA-F4012 (SEOIL) **b.** FG pin specifications: 2.5 X 4 (ring terminal) **3.** Cable specifications: 4Cx2.5SQ (AWG14)
For power	Power Cable (brake type)	XLCS-P□□□PB	XML-SF XML-LF XML-FF SERIES Below 3.5KW	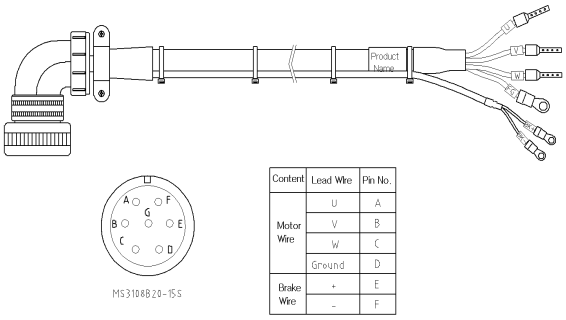 **1.** Motor connection **a**. Plug specifications:: MS3108B24-10S(MS) **2**. Drive connection **a**. Cable specifications: 4C x 2.5SQ or 4C x 14AWG **b**. FG pin specifications: 2.5 x 4(Ring Terminal) **3**. Brake power connection **a**. BK pin specifications : 1.5 x 3(Ring Terminal) **b**. Cable specifications: 2C x 0.75SQ or 2C x 18AW
For power	Standard type Power cable	XLCS-P□□□JS (new)	XML-SF XML-SG XML-FF XML-FG SERIES Over 3.5KW Below 5KW	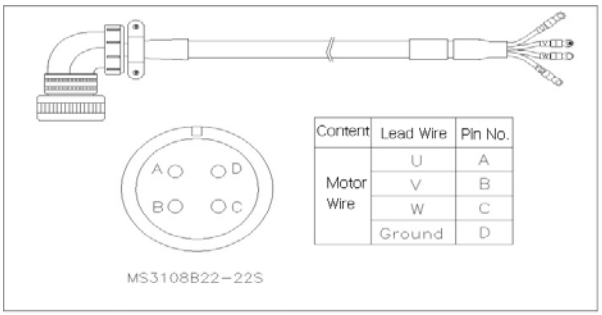 1. Motor connection (MS: Military Standard) **a.** Plug specifications: MS3108B (MS3106B) 22-22S 2. Drive connection (U, V, W, and FG) a. U, V and W pin specifications: 6012 b. FG pin specifications: 6.0 x 5 (Ring Terminal)

Category	Product Name	Type Name (Note 1)	Applicable Motors	Specifications
For power	Power Cable (Brake type)	XLCS-P□□□LB (new)	All models of XML-SF XML-LF XML-FF SERIES Over 3.5KW Below 5KW	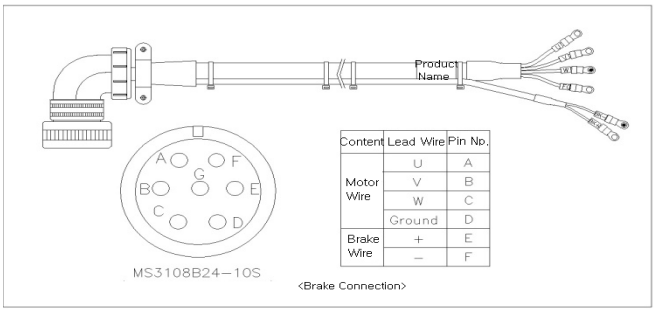 1. Motor connection a. Plug specification: MS3108B24-10S(MS) 2. Drive connection a. Cable specifications: 4C x 2.5SQ or 4C x 14AWG b. Pin specifications: 2.5 x 4(Ring Terminal) 3. Brake power connection: a. BK pin connection: 1.5 x 3(Ring Terminal) b. Cable specifications: 2C x 0.75SQ or 2C x 18AW
For power	Power cable for flat type motor(small capacity)	XLCS-P□□□FS-□ *Front : XLCS-P□□□FS * Rear : XLCS-P□□□FS-R	All models of XML-FB and XML-FC Series	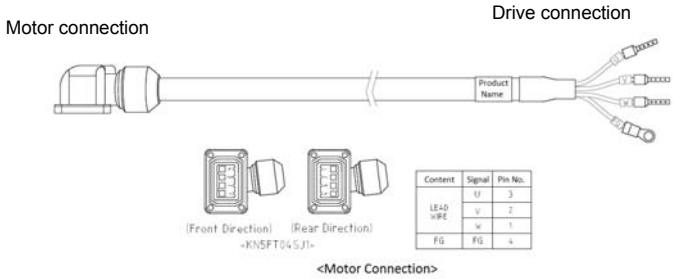 1. Motor connection a. Plug specification: KN5FT04SJ1(JAE) b. Plug specification: ST-KN-S-C1B-3500 (JAE) 2. Drive connection (U,V,W,FG) a. U,V,W pin connection: F1512 b. FG pin connection: 1.5x4 (Ring Terminal) 3. Cable specifications: 4Cx0.75SQ or 4Cx18AWG
For power	Brake cable for flat type motor(small capacity)	XLCS-B□□□QS *Front : XLCS-B□□□QS * Rear : XLCS-B□□□QS-R	All models of XML-FB and XML-FC Series	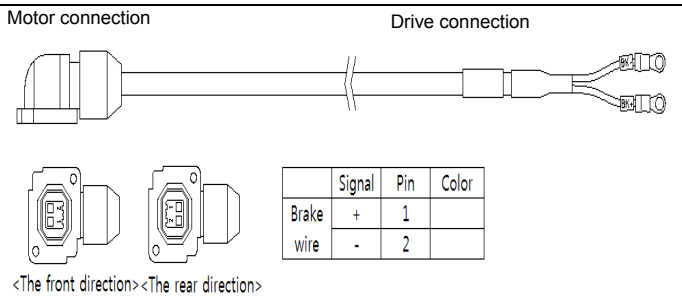 **1.** Motor connection **a.** Plug specifications: : KN5FT02SJ1 (JAE) **b.** Socket specifications: ST-KN-S-C1B-3500 (JAE) **2.** Drive connection **a.** Connection terminal specifications: 1.5x3(KET GP110012) **3.** Cable specifications: 2Cx0.75SQ or 2Cx18AWG18

Category	Product Name	Type Name (Note 1)	Applicable Motors	Specifications
For power	Brake cable	XLCS-P□□□SB (new model)	All models of XML-SG XML-LG XML-FG Series	Brake Connection Drive Connection 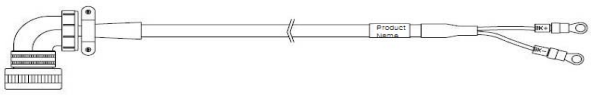 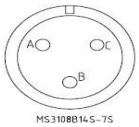 MS3108B14S-7S Content | Signal | Pin No. Brake Wire | + | A Brake Wire | – | B <Brake Connection> **1.** Motor side connector **a.** PLUG : MS3108B14-7S **2.** Power side Connector(+,-) **a.** Connection terminals : 1.5x3(KET GP110012) **3.** Cable **a.** 2Cx0.75SQ or 2Cx19AWG

NOTE 1) The □□□ in Type Name indicates the type and length of each cable. Refer to the table below for how to display them.

Cable length (m)	3	5	10	20
Robotic cable	F03	F05	F10	F20
General cable	N03	N05	N10	N20

■ Option (cable)

Category	Product Name	Type Name (Note 1)	Applicable Drive	Specifications
For power	Power cable for L series (small capacitor)	XLCS-P□□□LS(Front Direction)/ XLCS-P□□□LS-R(Rear Direction)	All models of XML-FAL/FBL/FCL Series	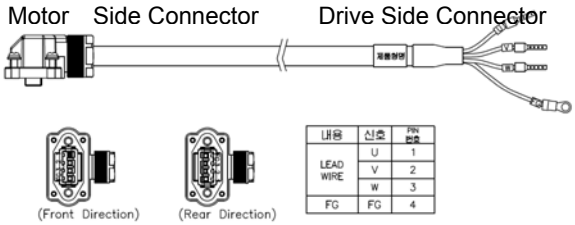 1. Motor side connector a. PLUG : SM-JN8FT04 (Suntone사) b. Socket : SMS-201 (Suntone사) 2. Drive side connector (U,V,W,FG) a. U,V,W pin connection:1512 b. FG pin: 1.5x4 (Ring Terminal) 3. Cable : 4Cx0.75SQ or 4Cx18AWG 4. Remark: For FAL motor, after connect power cable first, connect Encoder cable 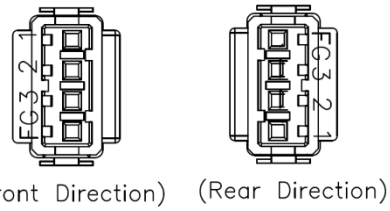

■ Option (cable)

<table>
<tr><th>Category</th><th>Product Name</th><th>Type Name (Note 1)</th><th>Applicable Drive</th><th>Specifications</th></tr>
<tr><td>For signaling</td><td>CN1 Cable</td><td>XLC-CN1□□A</td><td>XDL-L7 SERIES</td><td>
[Upper level controller] [Drive connection CN1]
Pin number display
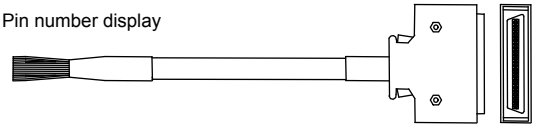

1. Drive connection (CN1)
a. Case specifications: 10350-52A0-008 (3M)
b. Connector specifications: 10150-3000VE (3M)
c. Cable specifications:ROW-SB0.1Cx50C (AWG 28)
<table>
<tr><th>CN1</th><th>Color</th><th>CN1</th><th>Color</th><th>CN1</th><th>Color</th><th>CN1</th><th>Color</th><th>CN1</th><th>Color</th></tr>
<tr><td>1</td><td>Orange/ 1
Black dot</td><td>11</td><td>Orange/ 2
Black dots</td><td>21</td><td>Orange/ 3
Black dots</td><td>31</td><td>Orange/ 4
Black dots</td><td>41</td><td>Orange/ 1
Black dots</td></tr>
<tr><td>2
3</td><td>Orange/ 1
Red dot
Yellow/ 1
Black dot</td><td>12
13</td><td>Orange/ 2
Red dots
Yellow/ 2
Black dots</td><td>22
23</td><td>Orange/ 3
Red dots
Yellow/ 3
Black dots</td><td>32
33</td><td>Orange/ 4
Red dots
Yellow/ 1
Black dots</td><td>42
43</td><td>Orange/ 1
Red dots
Yellow/ 1
Black dots</td></tr>
<tr><td>4</td><td>Yellow/ 1
Red dot</td><td>14</td><td>Yellow/ 2
Red dots</td><td>24</td><td>Yellow/ 3
Red dots</td><td>34</td><td>Yellow/ 1
Red dots</td><td>44</td><td>Yellow/ 1
Red dots</td></tr>
<tr><td>5
6</td><td>White/ 1
Black dot
White/ 1
Red dot</td><td>15
16</td><td>White/ 2
Black dots
White/ 2
Red dots</td><td>25
26</td><td>White/ 3
Black dots
White/ 3
Red dots</td><td>35
36</td><td>White/ 1
Black dots
White/ 1
Red dots</td><td>45
46</td><td>White/ 1
Black dots
White/ 1
Red dots</td></tr>
<tr><td>7
8
9</td><td>Grey/ 1
Black dot
Grey/ 1
Red dot
Pink/ 1
Black dot</td><td>17
18
19</td><td>Grey/ 2
Black dots
Grey/ 2
Red dots
Pink/ 2
Black dots</td><td>27
28
29</td><td>Grey/ 3
Black dots
Grey/ 3
Red dots
Pink/ 3
Black dots</td><td>37
38
39</td><td>Grey/ 1
Black dots
Grey/ 1
Red dots
Pink/ 1
Black dots</td><td>47
48
49</td><td>Grey/ 1
Black dots
Grey/ 1
Red dots
Pink/ 1
Black dots</td></tr>
<tr><td>10</td><td>Pink/ 1
Red dot</td><td>20</td><td>Pink/ 2
Red dots</td><td>30</td><td>Pink/ 3
Red dots</td><td>40</td><td>Pink/ 1
Red dots</td><td>50</td><td>Pink/ 1
Red dots</td></tr>
</table>
<table>
<tr><th>NO</th><th>PIN</th><th>NO</th><th>PIN</th><th>NO</th><th>PIN</th><th>NO</th><th>PIN</th><th>NO</th><th>PIN</th></tr>
<tr><td>1</td><td>TRQCOM</td><td>11</td><td>PR+</td><td>21</td><td>SPD3/MODE</td><td>31</td><td>/BO</td><td>41</td><td>RDY−</td></tr>
<tr><td>2</td><td>REFCOM</td><td>12</td><td>PR−</td><td>22</td><td>SPD2</td><td>32</td><td>AO</td><td>42</td><td>TLOUT</td></tr>
<tr><td>3</td><td>PZO</td><td>13</td><td>PCON</td><td>23</td><td>SPD1</td><td>33</td><td>/AO</td><td>43</td><td>ZSPD</td></tr>
<tr><td>4</td><td>ZO</td><td>14</td><td>GAIN2(SEN)</td><td>24</td><td>GND</td><td>34</td><td>+15V</td><td>44</td><td>BRAKE</td></tr>
<tr><td>5</td><td>/ZO</td><td>15</td><td>PCLEAR</td><td>25</td><td>GND</td><td>35</td><td>−15V</td><td>45</td><td>INSPD/INPOS</td></tr>
<tr><td>6</td><td>SRO</td><td>16</td><td>TLIMIT</td><td>26</td><td>SETCOM</td><td>36</td><td>GND</td><td>46</td><td>DIR</td></tr>
<tr><td>7</td><td>/SRO</td><td>17</td><td>ALMRST</td><td>27</td><td>SPDCOM</td><td>37</td><td>GNDA</td><td>47</td><td>SVON</td></tr>
<tr><td>8</td><td>GNDA</td><td>18</td><td>EMG</td><td>28</td><td>MONIT1</td><td>38</td><td>ALARM+</td><td>48</td><td>STOP</td></tr>
<tr><td>9</td><td>PF+</td><td>19</td><td>CMLIM</td><td>29</td><td>MONIT2</td><td>39</td><td>ALARM−</td><td>49</td><td>PULCOM</td></tr>
<tr><td>10</td><td>PF−</td><td>20</td><td>CCWLIM</td><td>30</td><td>BO</td><td>40</td><td>RDY+</td><td>50</td><td>+24Vin</td></tr>
</table>
</td></tr>
<tr><td>For signaling</td><td>Communication cable</td><td>XLCS-CM5L7U</td><td>XDL-L7 SERIES</td><td>
[PC - USB port] [Servo drive – CN5]
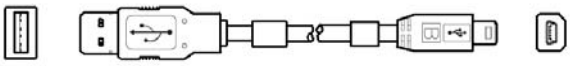

1. PC connection: USB A plug
2. Drive connection (CN5): Mini USB 5P plug
3. Electrical requirements:
Double shielding, twisted pair, EMI filter installation
(similar product: KU-AMB518 by SANWA)
</td></tr>
</table>

NOTE 1) The □ in Type Name indicates the length of each cable. Refer to the table below for how to display them.

Cable length (m)	1	2	3	5
Written as	01	02	03	05

■ **Option (connector)**

Category	Product Name	Type Name	Applicable Drive	Specifications
T/B	Terminal block for CN1	XLC-VSCN1T XLC-VPCN1T	XDL-L7 SERIES	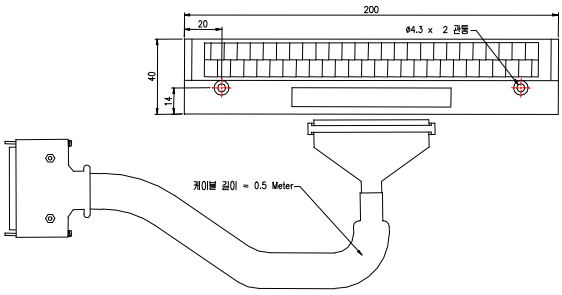 **1.** APC-VSCN1T: CN1 T/B expansion of APD-VS **2.** APC-VPCN1T: CN1 T/B expansion of APD-VP **3.** The cable length can be changed. **4.** Standard cable length: 0.5 [m]
CN	CN1 Connector	XLC-CN1NNA	XDL-L7 SERIES	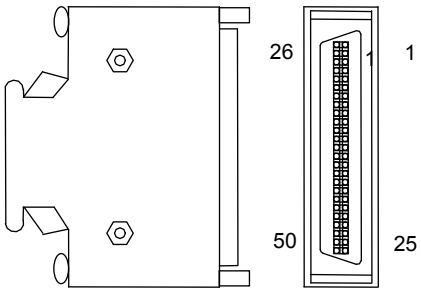 **1.** Case specifications: 10350-52A0-008 (3M) **2.** Connector specifications: 10150-3000VE (3M)
CN	CN2 Connector	XLC-CN3NNA	XDL-L7 SERIES	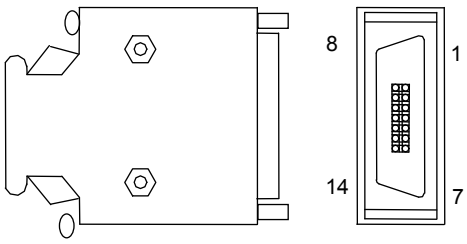 **1.** Case specifications: 10314-52A0-008 (3M) **2.** Connector specifications: 10114-3000VE (3M)

■ Option (braking resistance)

Category	Product Name	Type Name	Applicable Drive	Specifications
Resistance	Braking resistance	XLCS-140R50	XDL-L7□A001□ XDL-L7□A002□ XDL-L7□A004□	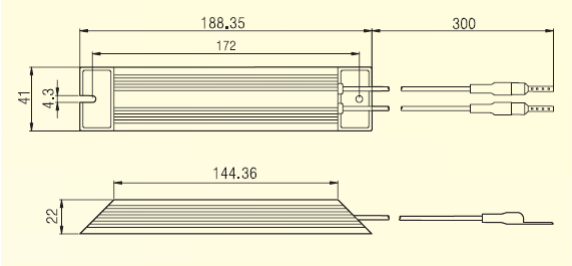
Resistance	Braking resistance	XLCS-300R30	XDL-L7□A008□ XDL-L7□A010□	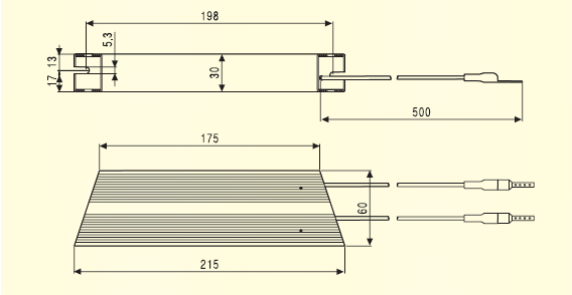
Resistance	Braking resistance	XLC-600R30	XDL-L7□A020□ (2P) XDL-L7□A035□ (3P)	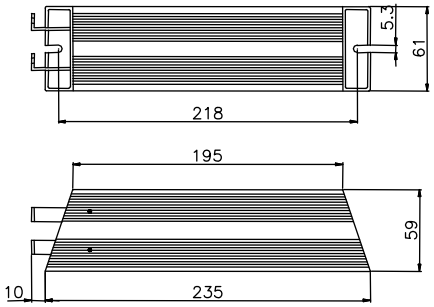
Resistance	Braking resistance	XLC-600R28	XDL-L7□A050□ (4P)	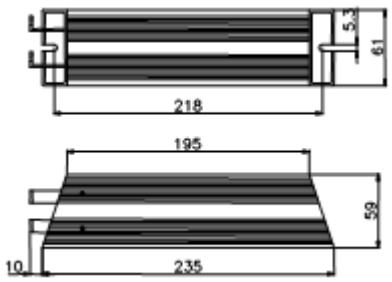

8 Maintenance and Inspection

8.1 Maintenance and Inspection

This chapter explains how to conduct basic maintenance and inspection, diagnosis and troubleshooting on the servo motor and drive.

8.1.1 Precautions

1. Measuring motor voltage: The voltage output from the servo amp to the motor is PWM controlled, and, for this reason, its waves take the form of pulses. Use a rectifier voltmeter for accurate measuring because different meters often produce different results.
2. Measuring motor current: Connect a moving-iron-type ampere meter directly for use as the pulse waveform becomes smooth sine waves to some degree because of the motor's reactance.
3. Measuring electric power: Use an electrodynamometer based on the 3 power meter method.
4. Other gauges: When using an oscilloscope or digital voltmeter, make sure that they do not touch the ground. Use 1 [mA] or lower of gauge input current.

8.1.2 What to Inspect

Be sure to start inspection approximately 10 minutes after power is turned off because the charged voltage left in the internal smoothing condenser may cause an accident.

(1) Servo Motor Inspection

⚠ Caution
Be sure to start inspection approximately 10 minutes after power is turned off because the charged voltage left in the internal smoothing condenser may cause an accident.

Inspection Item	Inspection Period	Inspection and Handling	Notes
Vibration and sound check	Every month	Touch and listen to sound.	The feel and sound should be no more notable than usual.
Exterior inspection	Depending on the contamination or damage	Clean with cloth or air pressure.	-
Insulation resistance measurement	At least once a year	Disconnect from the drive and measure insulation resistance. Normal resistance is 10 [MΩ] or higher. Note 1)	If resistance is 10[MΩ] or lower, contact our service center.
Oil seal replacement	Once every 5,000 hours at the least	Remove it from the machine for replacement.	This only applies to motors with an oil seal.
General inspection	Every 20,000 hours or once every 5 years at the least	Contact our service center.	Do not disassemble the servo motor for cleaning yourself.

NOTE 1) Conduct measuring between FG and one of the U, V, and W power lines of the servo motor.

(2) Servo Drive Inspection

Inspection Item	Inspection Period	How to inspect	What to do if abnormality is found
Cleaning of the main body and the board	At least once a year	Check if there is any dust or oil on it.	Clean with air pressure or cloth.
Loose screws	At least once a year	Check whether screws on terminals and connectors are loose.	Fasten the screws.
Defective parts on the main body or the board	At least once a year	Check whether there is any discoloration, damage, or disconnection caused by heat.	Contact our company.

8.1.3 Parts Replacement Cycle

The following parts may experience low performance or malfunction because of mechanical friction and aging. It is therefore important to conduct regular maintenance checks and replace parts.

1. Smoothing condenser: This part ages because of the impact of ripple current and other factors. Its lifespan greatly depends on the surrounding temperature and environment. When continuously used in an air-conditioned ordinary environment, it lasts 10 years on average. Inspect it at least once a year because it ages rapidly over a short period of time once it starts to do so. (Inspect more frequently when it gets closer to its obsolescence.)

   ※ Criteria for visual inspection:

   a. Case's condition: Expanded sides and bottom of the case

   b. Lid's condition: Notable expansion, severe cracks, or broken parts

   c. Explosion valve's condition: Notable valve expansion and operation

   d. Besides, check regularly if there is any crack, broken part, discoloration, or leak on the exterior. A condenser shall be deemed obsolete when its capacity becomes 85[%] or lower of the rated capacity.

2. Relays: Bad connection occurs because of wear and tear at the contact caused by switching current. A relay is deemed obsolete when its accumulated switching reaches 100,000 times as it depends greatly on power capacity.

3. Motor bearing: Replace when it reaches 20,000 to 30,000 hours of operation at the rated speed under the rated load. Replace if abnormal sound or vibration is detected during inspection, which are dependent on operating conditions.

[Standard Part Replacement Cycle]

Part Name	Standard Replacement Cycle	Method
Smoothing condenser	7-8 years	Replace (decide after inspection).
Relays	-	Decide after inspection.
Fuses	10 years	Replace.
Aluminum electrolytic condensers on printed boards	5 years	Replace with new boards (decide after inspection).
Cooling fans	4-5 years	Replace.
Motor bearings	-	Decide after inspection.
Motor oil seals	5,000 hours	Replace.

8.2 Diagnosis of Abnormality and Troubleshooting

AL-□ is displayed if a problem occurs during operation. In this case, try to solve the problem by following this advice. If the problem persists, contact our service center.

8.2.1 Servo Motor

[Cause of abnormality, how to inspect, and troubleshooting]

Symptoms	Cause	How to inspect	Troubleshooting
The motor does not move.	The input of CCWLIM and CWLIM is off.	Refer to "1.2 System Configuration."	P-OT and N-OT Contacts have to be "ON"
	Parameters are incorrectly set.	Check the parameters of the motor, encoder, and encoder type control mode.	Reset the parameters. (Refer to “Chapter 4 Parameters.”)
	The motor has defects.	Measure the motor lead terminal with a tester (resistance between phases: several ohms).	Replace the motor.
	Locking screws are loose.	Check locking screws.	Fasten loose screws.
	External wiring is incorrect or cables are disconnected.	Check the wiring of the motor and the encoder.	Redo the wiring. Replace cables.
	The encoder has defects.	Check output waves.	Replace the encoder. (Contact our service center.)
Motor rotation is unstable.	Connection is bad.	Check the connection of the motor lead terminal.	Fix bad connection.
	Input voltage is low.	Check the input voltage of the drive.	Change power.
	Overload occurs.	Check the condition of the machine.	Remove foreign substances in the rotating unit and provide lubricants (or grease).
The motor overheats.	The ambient temperature is high.	Check the temperature around the motor. (40[℃] or lower)	Change heat transfer structure. Install a cooling fan.
	The surface of the motor is contaminated.	Check whether there is any foreign substance on the surface of the motor.	Clean the surface of the motor.
	Overload occurs.	Check the load factor of the drive. Check acceleration/deceleration time.	Reduce load. Increase acceleration/deceleration time. Replace with a motor of greater capacity.
	The magnetic power of the magnets is reduced.	Check counter voltage and voltage waveforms.	Replace the motor.
A strange sound occurs.	Coupling is bad.	Check the tightness of coupling screws and the concentricity of the connection.	Readjust the coupling.
	Bearings are abnormal.	Check the vibration and sound of bearings.	Contact us.
	Parameters are incorrectly set. (Inertia, gain, and time constant)	Check parameters.	Refer to “Chapter 4 Parameters.”

8.2.2 Servo Drive

If an alarm triggers, the malfunction signal output contact (ALARM) is turned off and the dynamic brake stops the motor.

Alarm Code	Name	Details	What to inspect
AL-10	IPM Fault	Overcurrent (H/W)	Check for incorrect drive output wiring / incorrect encoder wiring. Check the motor ID / drive ID / encoder setting. Check for equipment clash or confinement.
AL-11	IPM temperature	IPM module overheat	Check for incorrect drive output wiring and incorrect encoder wiring. Check the motor ID, drive ID, and encoder setting. Check for equipment clash or confinement.
AL-14	Overcurrent	Overcurrent (S/W)	Check for incorrect drive output wiring and incorrect encoder wiring. Check the motor ID, drive ID, and encoder setting. Check for equipment clash or confinement.
AL-15	Current offset	Abnormal current offset	Replace the drive if [St-23] and [St-24] are 10% or higher of the rated current.
AL-16	Overcurrent (/CL)	Overcurrent (H/W)	Check for incorrect drive output wiring and incorrect encoder wiring. Check the motor ID, drive ID, and encoder setting. Check for equipment clash or confinement.
AL-21	Continuous overload	Continuous overload	Check for equipment clash or confinement. Check load and brake condition. Check for incorrect drive output wiring and incorrect encoder wiring. Check the motor ID, drive ID, and encoder setting.
AL-22	Room temperature	Drive overheat	Check the temperature inside the drive [St-19]. Install a cooling fan and check load.
AL-23	Regen. Overload	Regenerative overload	Check input voltage, regenerative braking resistance, and wiring. Replace the drive.
AL-24	Motor cable open	Motor cable disconnection	Motor wiring
AL-30	Encoder comm.	Serial encoder communication error	Check for incorrect wiring of the serial encoder cable.
AL-31	Encoder cable open	Encoder cable disconnection	Check whether the encoder cable is disconnected.
AL-32	Encoder data error	Encoder data error	Check the [P0-02] setting and encoder wiring.
AL-33	Motor setting error	Motor ID setting error	Check the [P0-00] setting.
AL-34	Encoder Z PHASE Open	Encoder Z PHASE cable broken	Check the encoder cable
AL-35	Low Battery Error	Low voltage error	BackUp battery has not enough voltage, Change battery. ※After replacing battery, Power “ON” and Homing operation are absolutely needed (apply from S/W Ver 1.28)

Alarm Code	Name	Details	What to inspect
AL-40	Under voltage	Low voltage	Check input voltage and power unit wiring.
AL-41	Overvoltage	Overvoltage	Check input voltage and wiring. Check for braking resistance damage. Check for excessive regenerative operation. Check regenerative resistance.
AL-42	RST power fail	Main power failure	Check power unit wiring and power.
AL-43	Control power fail	Control power failure	Check power unit wiring and power.
AL-50	Over speed limit	Overspeed	Check the encoder, encoder setting, encoder wiring, gain setting, motor wiring, motor ID, electric gear ratio, and speed command scale.
AL-51	Position following	Excessive position error	Check the excessive position command pulse setting [P4-11], wiring, limit contact point, gain setting, encoder setting, and electric gear ratio. Check for equipment confinement and load.
AL-52	EMG	Emergency stop	Check the emergency stop contact signal, external 24 V power, and contact points.
AL-53	Over pulse CMD	Pulse command frequency error	Check pulse command frequency from the upper level controller. Check command pulse type.
AL-54	Speed Deviation	Excessive speed error	Check for incorrect wiring in the drive output and encoder. Also, check the connection and load status of the equipment.
AL-55	Motor Over Run	Motor overrun	Check for incorrect wiring in the drive output and encoder. Also, check the connection and load status of the equipment.
AL-63	Parameter checksum	Parameter error	Check the value of parameters
AL-64	Parameter range	Parameter range error	Check the value of parameters
AL-71	Invalid factory setting	Invalid factory setting	Check the value of parameters
AL-72	GPIO setting	Output contact point setting error	Check the value of parameters

If a warning code is displayed in the current operation status [St-00], the servo drive is operating abnormally. Check what needs to be inspected for the issue.

Warning State (CODE)	Name	Details and cause	What to inspect
W-01	RST_PFAIL	Main power phase loss	If the [P0-06] DIGIT 2 is set to 1, the main power fails.
W-02	LOW_BATT	Low battery	BackUp battery has not enough voltage
W-04	OV_TCMD	Excessive torque command	More than the maximum torque commands have been entered.
W-08	OV_VCMD	Overspeed command	More than the maximum speed commands have been entered.
W-10	OV_LOAD	Overload warning	The maximum overload [P0-13] has been reached.
W-20	SETUP	Capacity setting	The electric current capacity of the motor is bigger than that of the drive.
W-40	UD_VTG	Low voltage warning	When [P0-06] DIGIT 2 is set to 1, the DC link voltage is 190 V or below.
W-80	EMG	EMG contact point	Check the I/O wiring and [P2-09] setting

Warning code is displayed to hexadecimal. If the over 2 warning codes occurs, the sum of warning codes will be displayed. For example, if [W-04] Excessive Toque Command and [W-08] Excessive Speed Command are occurred at the same time, [W-0C] will be displayed.

- If warning code 80 occurs, “SV-ON” state changes to “SV-OFF” state automatically.

-To avoid warning code 80, wire EMG contact or change EMG input signal logic definition.

(Refer to 4.1 How to Use the Loader)

■ Servo Drive Overload Graphs (400W or below)

(1) Graph of Overload during Rotation

Load (%)	AL-21 Occurring Time (sec)	MAX	MIN	Load (%)	AL-21 Occurring Time (sec)	MAX	MIN
100% or below	Infinite						
110	55776.0	89241.6	33465.6	210	66.8	106.9	40.08
120	13944.0	22310.4	8366.4	220	50.1	80.2	30.06
130	6197.3	9915.7	3718.38	230	38.5	61.6	23.1
140	3486.0	5577.6	2091.6	240	30.3	48.5	18.18
150	1183.0	1892.8	709.8	250	24.2	38.7	14.52
160	566.0	905.6	339.6	260	4.2	6.7	2.52
170	318.0	508.8	190.8	270	3.8	6.1	2.28
180	198.0	316.8	118.8	280	3.4	5.4	2.04
190	131.0	209.6	78.6	290	3.0	4.8	1.8
200	92.0	147.2	55.2	300	2.7	4.3	1.62

Load Curve During Rotation

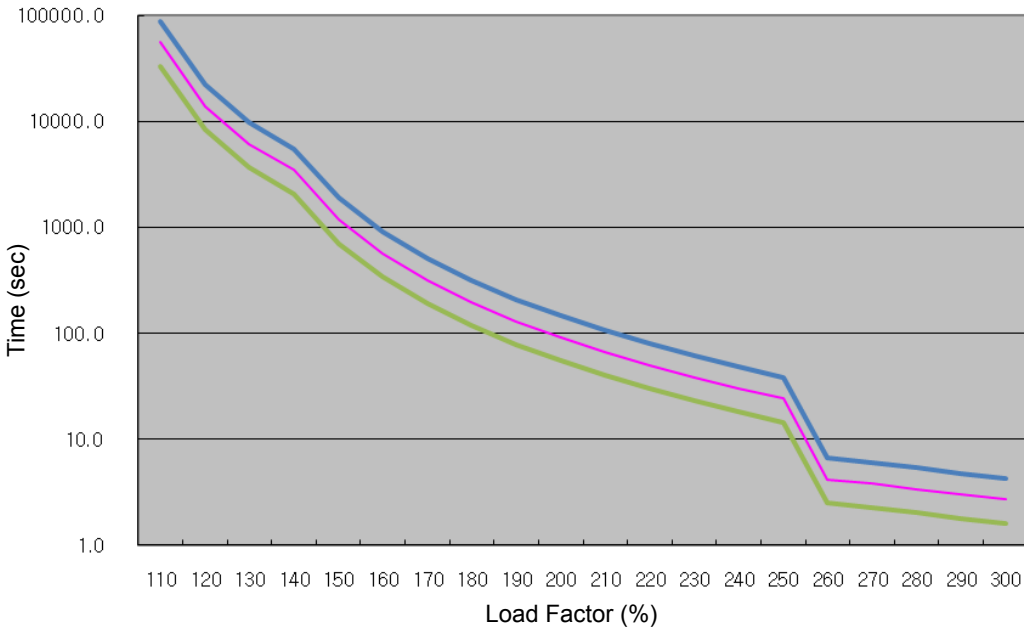

(2) Graph of Overload during Stop

Load (%)	AL-21 Occurring Time (sec)	MAX	MIN	Load (%)	AL-21 Occurring Time (sec)	MAX	MIN
100% or below	Infinite						
110	37937.7	60700.3	22762.62	210	50.1	80.2	30.06
120	9483.9	15174.2	5690.34	220	38.5	61.6	23.1
130	4215.1	6744.2	2529.06	230	30.3	48.5	18.18
140	2371.0	3793.6	1422.6	240	9.7	15.5	5.82
150	926.0	1481.6	555.6	250	8.3	13.3	4.98
160	470.0	752.0	282	260	3.8	6.1	2.28
170	273.0	436.8	163.8	270	3.4	5.4	2.04
180	173.0	276.8	103.8	280	3.1	5.0	1.86
190	117.0	187.2	70.2	290	2.7	4.3	1.62
200	66.0	105.6	39.6	300	2.5	4.0	1.5

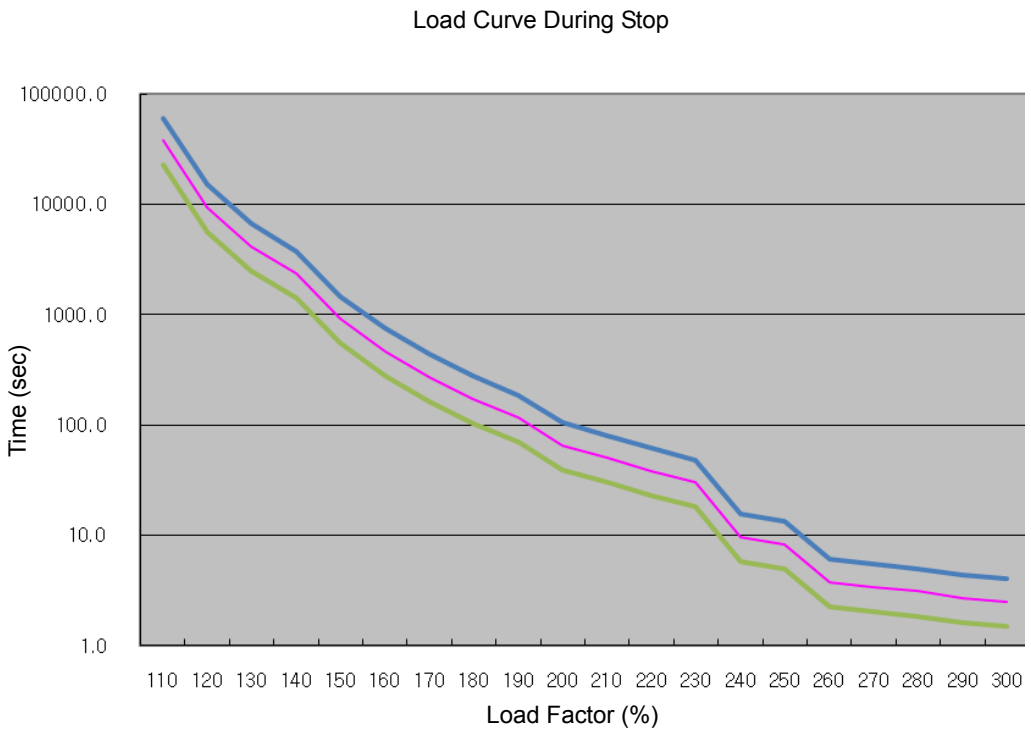

■ Servo Drive Overload Graphs (SA type of 100 W or below)

(1) Graph of Overload during Rotation

Load (%)	AL-21 Occurring Time (sec)	MAX	MIN	Load (%)	AL-21 Occurring Time (sec)	MAX	MIN
100% or below	Infinite						
110	1696.0	2713.6	1017.6	210	5.2	8.3	3.12
120	424.0	678.4	254.4	220	4.4	7.0	2.64
130	188.4	301.5	113.064	230	3.8	6.1	2.28
140	106.0	169.6	63.6	240	3.3	5.3	1.98
150	70.4	112.6	42.24	250	2.9	4.6	1.74
160	26.8	42.9	16.08	260	2.6	4.2	1.56
170	20.6	33.0	12.36	270	2.3	3.7	1.38
180	16.2	25.9	9.72	280	2.0	3.2	1.2
190	13.0	20.8	7.8	290	1.8	2.9	1.08
200	10.5	16.8	6.3	300	1.6	2.6	0.96

Load Curve during Rotation 100 W or Lower SA Type

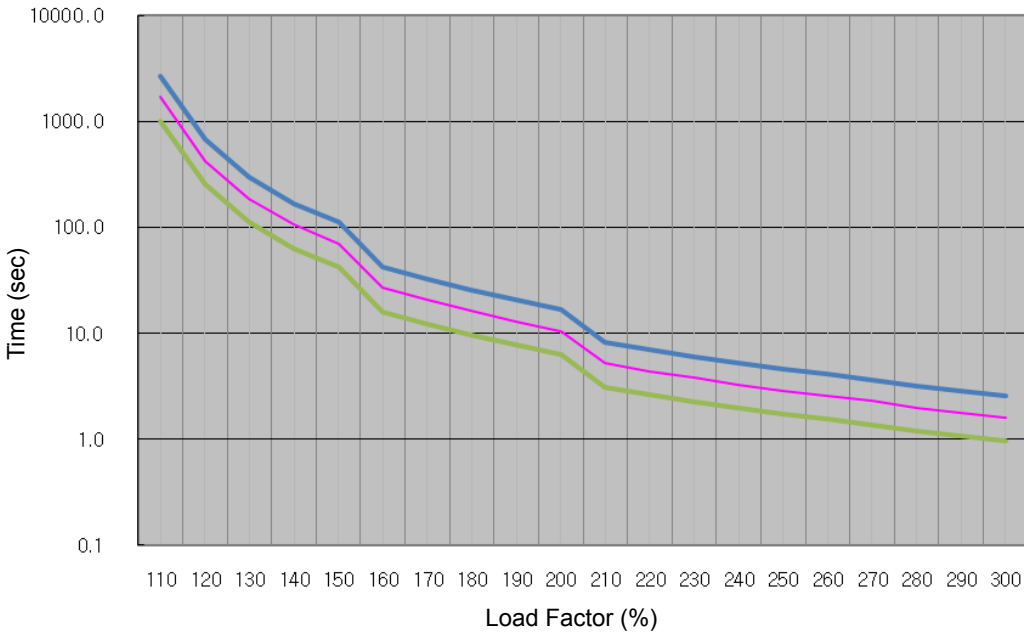

(2) Graph of Overload during Stop

Load (%)	AL-21 Occurring Time (sec)	MAX	MIN	Load (%)	AL-21 Occurring Time (sec)	MAX	MIN
100% or below	Infinite						
110	1372.8	2196.5	823.68	210	3.9	6.2	2.34
120	343.2	549.1	205.92	220	3.4	5.4	2.04
130	152.5	244.0	91.518	230	3.0	4.8	1.8
140	85.8	137.3	51.48	240	2.6	4.2	1.56
150	58.6	93.8	35.16	250	2.3	3.7	1.38
160	16.2	25.9	9.72	260	2.0	3.2	1.2
170	13.0	20.8	7.8	270	1.8	2.9	1.08
180	10.5	16.8	6.3	280	1.6	2.6	0.96
190	8.7	13.9	5.22	290	1.5	2.4	0.9
200	7.2	11.5	4.32	300	1.3	2.1	0.78

Load Curve during Stop 100 W or Lower SA Type

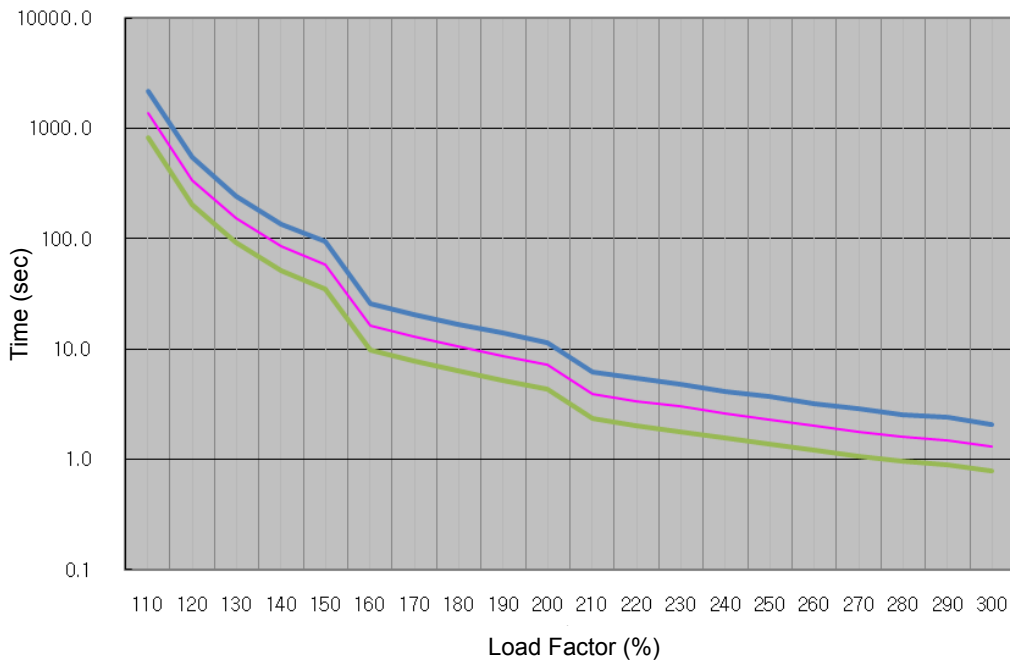

■ Servo Drive Overload Graphs (750W, 1.0KW)

(1) Graph of Overload during Rotation

Load (%)	AL-21 Occurring Time (sec)	MAX	MIN	Load (%)	AL-21 Occurring Time (sec)	MAX	MIN
100% or below	Infinite						
110	105800	169280.0	63480	210	119.0	190.4	71.4
120	26450	42320.0	15870	220	89.2	142.7	53.52
130	11755	18808.0	7053	230	49.3	78.9	29.58
140	6612.5	10580.0	3967.5	240	38.8	62.1	23.28
150	2244.0	3590.4	1346.4	250	31.0	49.6	18.6
160	1073.6	1717.8	644.16	260	7.0	11.2	4.2
170	603.2	965.1	361.92	270	6.4	10.2	3.84
180	413.6	661.8	248.16	280	5.7	9.1	3.42
190	273.6	437.8	164.16	290	5.0	8.0	3
200	201.0	321.6	120.6	300	4.6	7.4	2.76

Load Curve during Rotation

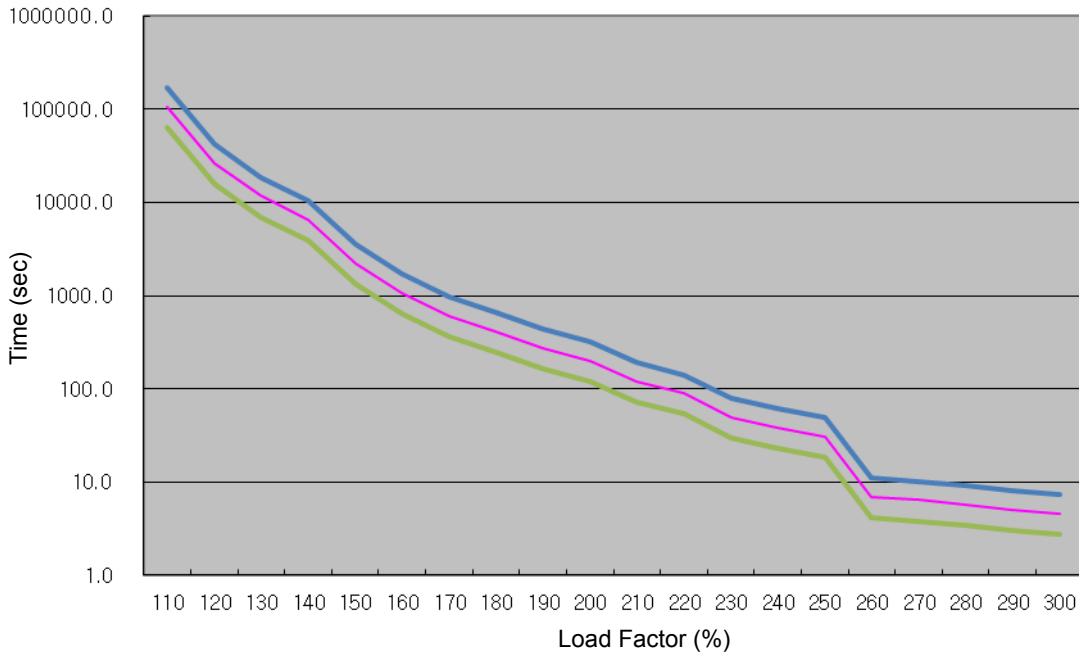

(2) Graph of Overload during Stop

Load (%)	AL-21 Occurring Time (sec)	MAX	MIN	Load (%)	AL-21 Occurring Time (sec)	MAX	MIN
100% or below	Infinite						
110	37937.7	60700.3	22762.62	210	50.1	80.2	30.06
120	9483.9	15174.2	5690.34	220	38.5	61.6	23.1
130	4215.1	6744.2	2529.06	230	30.3	48.5	18.18
140	2371.0	3793.6	1422.6	240	9.7	15.5	5.82
150	926.0	1481.6	555.6	250	8.3	13.3	4.98
160	470.0	752.0	282	260	3.8	6.1	2.28
170	273.0	436.8	163.8	270	3.4	5.4	2.04
180	173.0	276.8	103.8	280	3.1	5.0	1.86
190	117.0	187.2	70.2	290	2.7	4.3	1.62
200	66.0	105.6	39.6	300	2.5	4.0	1.5

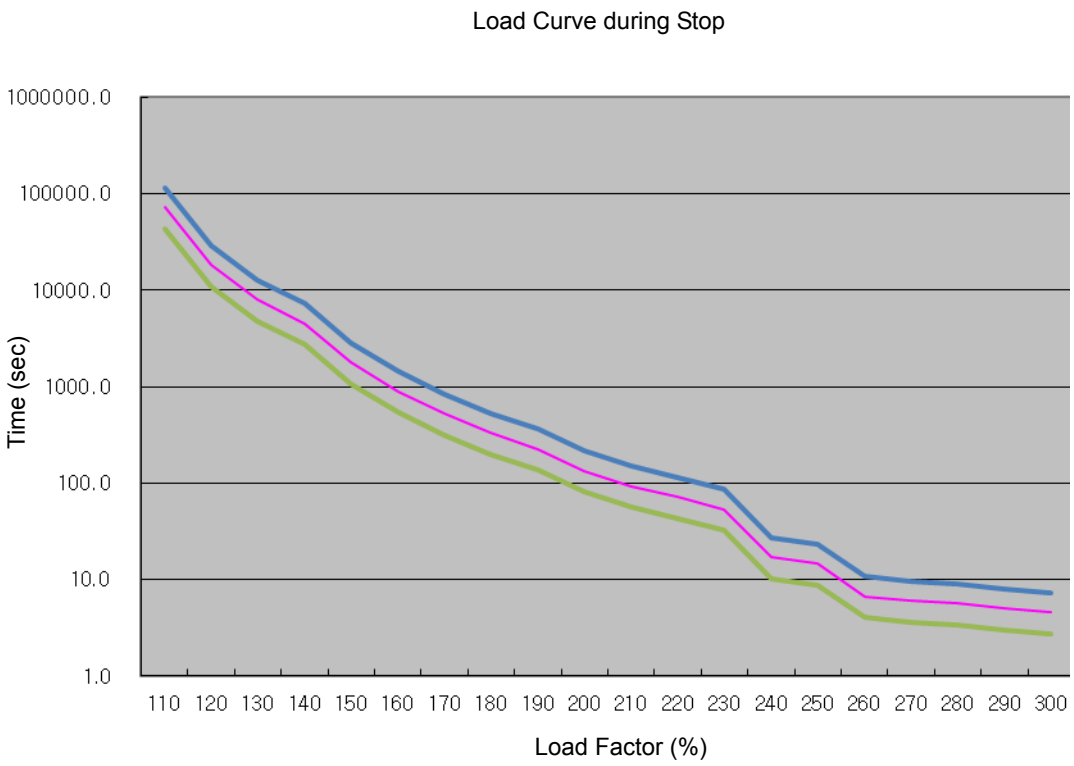

■ Servo Drive Overload Graphs (2.0KW, 3.5kW)

(1) Graph of Overload during Rotation

Load(%)	AL-21 Occurring Time(sec)	MAX	MIN	Load(%)	AL-21 Occurring Time(sec)	MAX	MIN
100% or below	Infinite						
110	4832.0	7731.2	2899.2	210	66.8	106.9	40.08
120	1208.0	1932.8	724.8	220	50.1	80.2	30.06
130	536.9	859.0	322.1333	230	38.5	61.6	23.1
140	302.0	483.2	181.2	240	30.3	48.5	18.18
150	257.0	411.2	154.2	250	24.2	38.7	14.52
160	229.0	366.4	137.4	260	4.2	6.7	2.52
170	200.0	320.0	120	270	3.8	6.1	2.28
180	165.0	264.0	99	280	3.4	5.4	2.04
190	131.0	209.6	78.6	290	3.0	4.8	1.8
200	103.0	164.8	61.8	300	2.7	4.3	1.62

Load Curve During Rotation

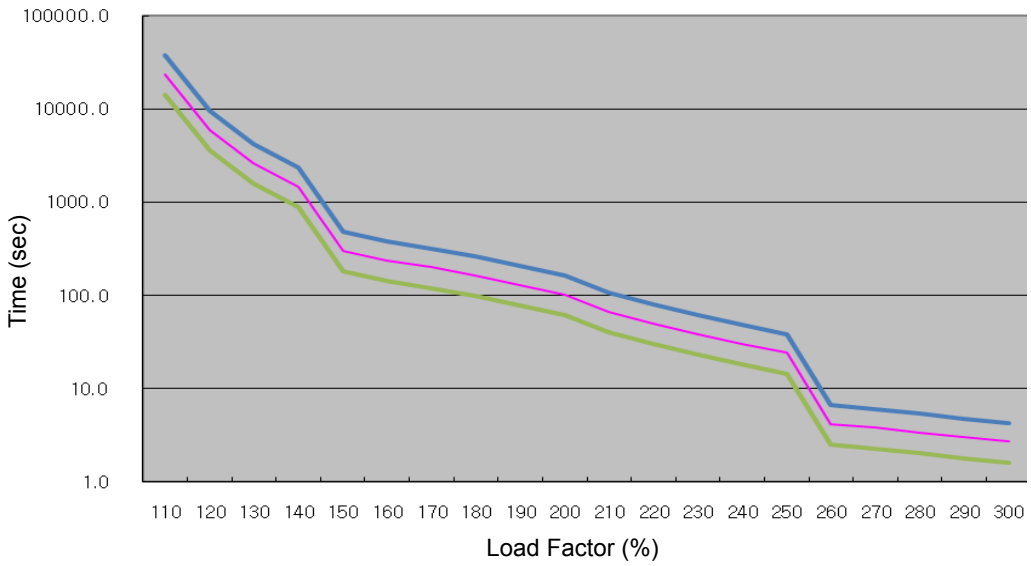

(2) Graph of Overload during Stop

Load(%)	AL-21 Occurring Time (sec)	MAX	MIN	Load(%)	AL-21 Occurring Time (sec)	MAX	MIN
100% or below	Infinite						
110	4832.0	7731.2	2899.2	210	44.0	70.4	26.4
120	1208.0	1932.8	724.8	220	36.0	57.6	21.6
130	536.9	859.0	322.1333	230	30.3	48.5	18.18
140	302.0	483.2	181.2	240	9.7	15.5	5.82
150	154.0	246.4	92.4	250	8.3	13.3	4.98
160	110.0	176.0	66	260	3.8	6.1	2.28
170	90.0	144.0	54	270	3.4	5.4	2.04
180	75.0	120.0	45	280	3.1	5.0	1.86
190	61.0	97.6	36.6	290	2.7	4.3	1.62
200	52.0	83.2	31.2	300	2.5	4.0	1.5
Load(%)	AL-21 Occurring Time (sec)	MAX	MIN	Load(%)	AL-21 Occurring Time (sec)	MAX	MIN

Load Curve During Stop

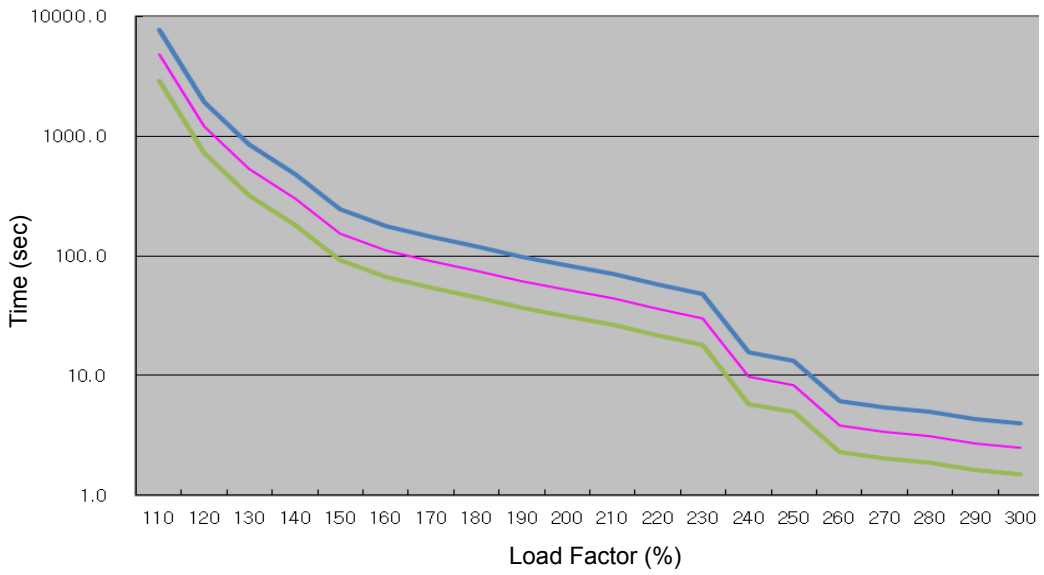

■ Servo Drive Overload Graphs (5.0KW)

(1) Graph of Overload during Rotation

Load(%)	AL-21 Occurring Time (sec)	MAX	MIN	Load(%)	AL-21 Occurring Time (sec)	MAX	MIN
100% or below	Infinite						
110	4832.0	7731.2	2899.2	210	66.8	106.9	40.08
120	1208.0	1932.8	724.8	220	50.1	80.2	30.06
130	536.9	859.0	322.1333	230	38.5	61.6	23.1
140	302.0	483.2	181.2	240	30.3	48.5	18.18
150	257.0	411.2	154.2	250	24.2	38.7	14.52
160	229.0	366.4	137.4	260	18.0	28.8	10.8
170	200.0	320.0	120	270	16.0	25.6	9.6
180	165.0	264.0	99	280	14.0	22.4	8.4
190	131.0	209.6	78.6	290	8.0	12.8	4.8
200	103.0	164.8	61.8	300	5.0	8.0	3.0

Load Curve During Stop

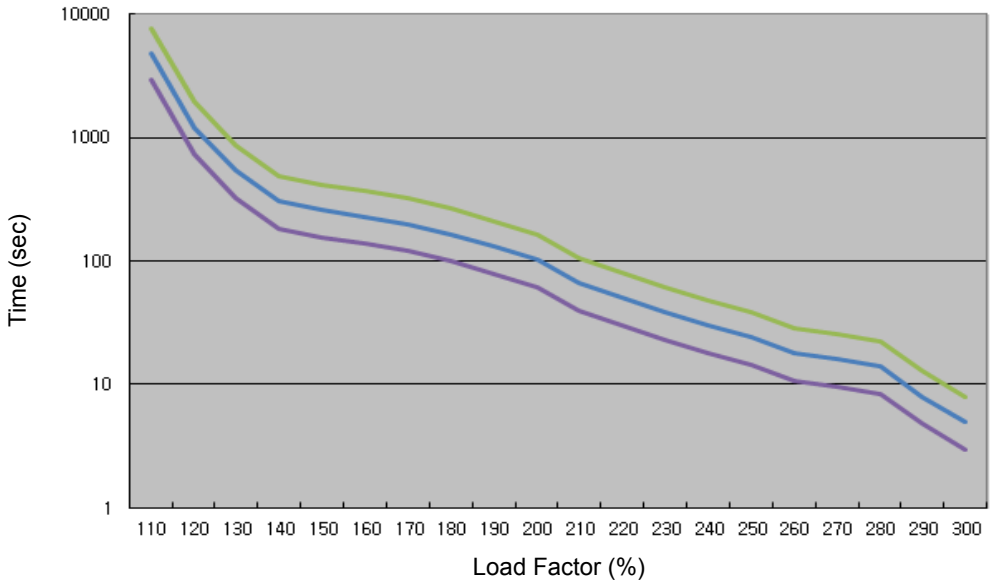

2) Graph of Overload during Stop

Load(%)	AL-21 Occurring Time (sec)	MAX	MIN	Load(%)	AL-21 Occurring Time (sec)	MAX	MIN
100% or below	Infinite						
110	4832.0	7731.2	2899.2	210	44.0	70.4	26.4
120	1208.0	1932.8	724.8	220	36.0	57.6	21.6
130	536.9	858.8	322.08	230	30.3	48.5	18.18
140	302.0	483.2	181.2	240	9.7	15.5	5.82
150	154.0	246.4	92.4	250	8.3	13.3	4.98
160	100.0	160.0	60.0	260	3.8	6.1	2.28
170	85.0	136.0	51.0	270	3.4	5.4	2.04
180	70.0	112.0	42.0	280	3.1	5.0	1.86
190	61.0	97.6	36.6	290	2.7	4.3	1.62
200	52.0	83.2	31.2	300	2.5	4.0	1.5

Load Curve During Stop

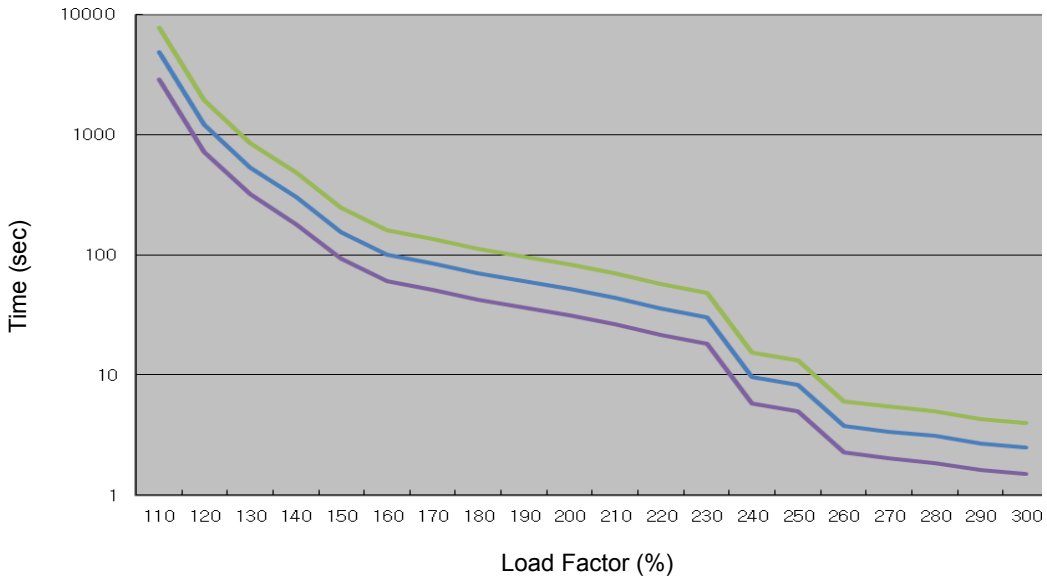

9 Appendix

9.1 Motor Type and ID (to be continued on the next page)

Model Name	ID	Watt	Notes
SAR3A	1	30	
SAR5A	2	50	
SA01A	3	100	
SA015A	5	150	
SB01A	11	100	
SB02A	12	200	
SB04A	13	400	
HB02A	15	200	Hollow type
HB04A	16	400	Hollow type
SC04A	21	400	
SC06A	22	600	
SC08A	23	800	
SC10A	24	1000	
SC03D	25	300	
SC05D	26	450	
SC06D	27	550	
SC07D	28	650	
SE09A	61	900	
SE15A	62	1500	
SE22A	63	2200	
SE30A	64	3000	
SE06D	65	600	
SE11D	66	1100	
SE16D	67	1600	
SE22D	68	2200	
SE03M	69	300	
SE06M	70	600	
SE09M	71	900	
SE12M	72	1200	
SE05G	73	450	

Model Name	ID	Watt	Notes
SE13G	75	1300	
SE17G	76	1700	
HE09A	77	900	Hollow type
HE15A	78	1500	Hollow type
SF30A	81	3000	
SF50A	82	5000	
SF22D	85	2200	
LF35D	190	3500	
SF55D	87	5500	
SF75D	88	7500	
SF12M	89	1200	
SF20M	90	2000	
LF30M	192	3000	
SF44M	92	4400	
SF20G	93	1800	
LF30G	191	2900	
SF44G	95	4400	
SF60G	96	6000	
SG22D	111	2200	
LG35D	193	3500	
SG55D	113	5500	
SG75D	114	7500	
SG110D	115	11000	
SG12M	121	1200	
SG20M	122	2000	
LG30M	195	3000	
SG44M	124	4400	
SG60M	125	6000	
SG20G	131	1800	
LG30G	194	2900	
SG44G	133	4400	

Model Name	ID	Watt	Notes
SE09G	74	850	
SG85G	135	8500	
SG110G	136	11000	
SG150G	137	15000	
FB01A	711	100	
FB02A	712	200	
FB04A	713	400	
FC04A	721	400	
FC06A	722	600	
FC08A	723	800	
FC10A	724	1000	
FC03D	725	300	
FC05D	726	500	
FC06D	727	600	
FC07D	728	700	
FE09A	761	900	
FE15A	762	1500	
FE22A	763	2200	
FE30A	764	3000	
FE06D	765	600	
FE11D	766	1100	
FE16D	767	1600	
FE22D	768	2200	
FE03M	769	300	
FE06M	770	600	
FE09M	771	900	
FE12M	772	1200	
FE05G	773	450	
FE09G	774	850	
FE13G	775	1300	
FE17G	776	1700	

Model Name	ID	Watt	Notes
SG60G	134	6000	
FF30A	781	3000	
FF50A	782	5000	
FF22D	785	2200	
FF35D	786	3500	
FF55D	787	5500	
FF75D	788	7500	
FF12M	789	1200	
FF20M	790	2000	
FF30M	791	3000	
FF44M	792	4000	
FF20G	793	1800	
FF30G	794	2900	
FF44G	795	4400	
FF60G	796	6000	
FF75G	804	7500	
FG22D	811	2200	
FG35D	812	3500	
FG55D	813	5500	
FG75D	814	7500	
FG12M	821	1200	
FG20M	822	2000	
FG30M	823	3000	
FG44M	824	4400	
FG20G	831	1800	
FG30G	832	2900	

Model Name	ID	Watt	Notes
DB03D	601	63	
DB06D	602	126	
DB09D	603	188	
DC06D	611	126	
DC12D	612	251	
DC18D	613	377	
DD12D	621	251	
DD22D	622	461	
DD34D	623	712	
DE40D	632	838	
DE60D	633	1257	
DFA1G	641	1728	
DFA6G	642	2513	

Model Name	ID	Watt	Notes
FAL05A	702	50	
FAL01A	703	100	
FAL15A	704	150	
FBL01A	714	100	
FBL02A	715	200	
FBL04A	716	400	
FCL04A	729	400	
FCL06A	730	600	
FCL08A	731	750	
FCL10A	732	1000	
FCL03D	733	300	
FCL05D	734	450	
FCL06D	735	550	
FCL07D	736	650	

9.2 Test Drive Procedure

Thank you for purchasing our product. Conduct test drive following the process described as follows:

⚠ Caution

In order to prevent accidents, conduct an operation test and test drive in manual JOG operation when there is no load (the motor exists without any coupling or belt) after attaching the servo motor to your equipment. Afterwards, connect the load and conduct the final test drive.

1. Product check: Check the name tag to verify that the product matches the model you ordered. (Refer to "Chapter 1.1.")

- A name tag is attached to the right side of the product. (For motors, right side of the shaft)
- Main check point: Product capacity and main options

2. Power connection: Wire single-phase AC 220 [V] to control power input C1 and C2, and three-phase AC 220 [V] to main power input L1, L2, and L3. (Refer to "Chapter 3.2.")

- The product runs even if you input single-phase AC 220 [V] as the main power. However, such wiring reduces torque and the lifespan of the product. Be sure to input three-phase AC 220 [V].

3. Signal cable wiring: Wire CN1 (I/O), CN3, CN4, CN5 (communication), CN2 encoder cable, and motor power cable per operation mode. (Refer to "Chapter 1.2 and Chapter 3.")

- Be sure to use robotic cables if the motor requires movement.
- Be sure to use twist shield cables as signal and encoder cables.
- Be sure to fasten bolts after locking the connector (drive direction) of the encoder cable.
- Be sure not to change the U, V, and W wiring of the motor power cable.

4. Control power supply: Supply single-phase AC 220 [V] to C1 and C2.

- Be sure to check external input voltage before turning on the servo drive.
- Check whether the display is normal. (There should be no break on the seven segments or alarm output.)

5. Motor ID setting: Set motor ID in the parameter [P0-00] and encoder pulse in the parameter [P0-02] respectively. (Refer to "Appendix 1.")

(※ The serial encoder is automatically set.)

- Easy check: Check the motor ID and encoder pulse on the product name tag attached on the right side of the motor.
- Check whether the external control signal input is normal.
- For information on how to handle the keys of the servo drive loader, refer to "4.1 Loader Handling."

6. Motor encoder type setting: Set ecoder type in the [P0-01], refer to “4.4.1 System Parameter Setting.

7. Main power supply: Supply three-phase AC 220 [V] to L1, L2, and L3.

- Be sure to check external input voltage before turning on the servo drive.
- When power is supplied, the red lamp on the charge LED at the bottom of the loader window comes on.
- If an alarm is displayed, it indicates that there is an error in the power circuit, wiring of the servo motor, or encoder wiring.
  Turn off power and fix the error using the information in "[Alarm Codes and Descriptions]."

8. Test drive: Start [Cn-00] by pressing [SET] to conduct test drive manually. (JOG operation speed can be changed in [P3-12].)

- * [Up]: Motor forward rotation (CCW) → Only operate while you hold down the key.
- * [Down]: Reverse motor rotation (CW) → Only operate while you hold down the key.
  - During normal operation, the power input of the servo drive and wiring among motors are verified as normal.
  - If the alarm is displayed, it indicates an error in the power circuit, wiring of the servo motor, or encoder wiring. Turn off power and fix the error using the information in "[Alarm Codes and Descriptions]."

9. Operation mode setting: Set operation mode in [P0-03].

- 0: Torque control operation
- 1: Speed control operation
- 2: Position control operation
- 3: Speed/position control operation
- 4: Speed/torque control operation

Speed operation setting

Position operation setting

10. Perform speed operation with the upper level controller by adjusting the following parameter data.

a. Speed operation setting parameter: [P3-01]~[P3-20]

b. Input/output setting parameter: [P2-00]~[P2-22]

c. Control setting parameter: [P1-00]~[P1-27] (Refer to “Appendix 1.”)

11. Perform position operation with the upper level controller by adjusting the following parameter data.

d. Position operation setting parameter: [P4-00]~[P4-14]

e. Input/output parameter setting parameter: [P2-00]~[P2-22]

f. Control parameter setting parameter: [P1-00]~[P1-27] (Refer to “Appendix 1.”)

10-1

- How to Set Control Parameters [Gain Tuning]

  1) Auto gain tuning

  → Perform automatic gain tuning by pressing [SET] in [Cn-05].

  → If the load condition of the equipment is not directly related to motor shaft, it is hard to perform accurate gain tuning because of characteristics of automatic gain tuning. Therefore, manual gain tuning is recommended.

  2) Manual gain tuning

  → Set inertia ratio [P1-00], speed proportional gain [P1-06], and speed integral time constant [P1-08] as the standard gain.

  → Increase inertia ratio [P1-00] gradually until the motor starts vibrating.

  → For more stable control, increase speed proportional gain [P1-06] a little at a time until the motor vibrates slightly. If you increase speed integral time constant [P1-08], the motor stops vibrating.

  → Increase speed integral time constant [P1-08] in the last stage and the motor will stop vibrating. However, it takes as much time to reach normal state as the time constant set in responsiveness. If you set speed proportional gain [P1-06] too big in an effort to attain satisfying responsiveness, overshoot might occur. The allowed range of overshoot is generally 10 percent or below.

11-1

- How to Set Electric Gear Ratio [P4-01]~[P4-05]

  → Electric gear ratio = transmission per input pulse X number of pulses per motor rotation / transmission per motor rotation

User Manual Revision History

Number	Issued Year and Month	Revised Content	Version Number	Notes
1	2011.10.19	Electronic gear ratio Option specification name	1.0	
2	2011.12.19	Add 750W, 2KW	1.1	
3	2012.01.09	Position command filter time constant, Warning code description	1.2	
4	2012.02.05	Brake resistance, Motor specification	1.3	
5	2012.03.01	Added FLAT Type Motor, Revise communication info	1.4	
6	2012.04.09	correct minor typo	1.5	
7	2012.06.19	Modify electric gear ratio	1.6	
8	2012.09.10	Refer to history of modification	1.7	
9	2012.11.15	Added Multi turn encoder and modify parameter	1.8	
10	2013.02.13	Add 5kW Drive Info	1.9	
11	2013.04.05	Add motor specific chart and option	2.0	
12	2013.08.09	Add new motor ID and cable	2.1	
13	2013.11.08	Added an alarm code and modified the motor cable	2.2	
14	2014.03.12	Added function, alarm code and modified motor details	2.3	
15	2014.06.27	Example of connecting to PLC, Added and modified motor details	2.4	

Green Management

LSIS considers environment protection as a high priority of management, and its employees try their best to protect the Earth.

Product Disposal

The LSIS servo drive is environmentally friendly.

It can be broken down to iron, aluminum, bronze, and synthetic resin (cover), and separately recycled.

LSIS values every single customers.

Quality and service come first at LSIS.

Always at your service, standing for our customers.

http://www.lsis.com

■ **HEAD OFFICE**
LS Tower, 127, LS-ro, Dongan-gu, Anyang-si,Gyeonggi-do, 431-848
Korea http://eng.lsis.com
Tel : (82-2)2034-4870/Fax : 82-2-2034-4648 e-mail : cshwang@lsis.com

■ **LSIS Tokyo Office _ Tokyo, Japan**
Address: 16FL. Higashi-Kan. Akasaka Twin Tower 17-22,
Akasaka.Monato-ku Tokyo 107-8470. Japan
Tel : 81-3-3582-9128/Fax : 81-3-3582-2667 e-mail : jschuna@lsis.com

■ **LSIS (ME) FZE _ Dubai, U.A.E.**
Address : Jafza View Tower Lob 19, Room 205 Along Sheikh Zayed
Road Jebel Aali Free Zone Dubai, United Arab Emirates
Tel : 971-4-886-5360/Fax : 971-4-886-5361 e-mail : jungyongl@lsis.com

■ **LSIS Shanghai Office _ Shanghai, China**
Address : Room E-G. 12FL Hiamin Empire Plaza. No.726. West.
Yan'an Road Shanghai 200050. P.R. China e-mail : liyong@lsis.com.cn
Tel : 86-21-5237-9977(609)/Fax : 89-21-5237-7189

■ **LSIS Beijing Office _ Beijing, China**
Address : B-Tower 17FL. Beijing Global Trade Center B/D. No. 36.
East BeisanHuan-Road. DongCheng-District. Beijing 100013. P.R. China
Tel : 86-10-5825-6027(666)/Fax : 86-10-5825-6028 e-mail : xunmj@lsis.com.cn

■ **LSIS Guangzhou Office _ Guangzhou, China**
Address : Room 1403.14FL. New Poly Tower.
2 Zhongshan Liu Road.Guangzhou.P.R China
Tel : 86-20-8328-6754/Fax : 86-20-8326-6287 e-mail : chenxs@lsis.com.cn

■ **LSIS Chengdu Office _ Chengdu, China**
Address : 12FL. Guodong Buiding. No.52 Jindun
Road Chengdu.610041. P.R. China
Tel : 86-28-8612-9151(9226)/Fax : 86-28-8612-9236 e-mail : comysb@lsis.com

■ **LSIS Qingdao Office _ Qingdao, China**
Address : YinHe Bldg. 402 Room No. 2P Shandong Road,
Qingdao-City,Shandong-province 266071, P.R. China
Tel : 86-532-8501-6068/Fax : 86-532-8501-6057 e-mail : wangzy@lsis.com.cn

■ **LSIS Europe B.V. , Netherlands**
Address : 1st. Floor, Tupolevlaan 48, 1119NZ, Schiphol-Rijk, The Netherlands
Tel : +31 (0)20 654 1420/Fax : +31 (0)20 654 1429 e-mail : junshickp@lsis.com

■ **Wuxi LSIS Co., Ltd _ Wuxi, China**
Address : 102-A. National High & New Tech Industrial Development Area.
Wuxi. Jiangsu. 214028. P.R. China
Tel : 86-510-8534-6666/Fax : 86-510-8534-4078 e-mail : caidx@lsis.com.cn

■ **Dalian LSIS Co., Ltd. _ Dalian, China**
Address : No. 15. Liaohexi 3-Road. Economic and Technical Development zone.
Dalian 116600. China
Tel : 86-411-273-7777/Fax : 86-411-8730-7560 e-mail : cuibx@lsis.com.cn

※ LSIS constantly endeavors to improve its product so that information in this manual is subject to change without notice.

ⓒ LSIS Co., Ltd 2011 All Rights Reserved.

2015. 5