Leader in Electrics & Automation

Miniature Circuit Breakers & Residual Current Devices

BKP / BKN / BKN-b / BKH / BF / RKP / RKS / RKN / 32KGR / BKD / BKD / Fb / BS & GR

Electric Equipment

LS Industrial Systems
www.lsis.biz

MCB

Miniature Circuit Breakers & Residual Current Devices

Contents :

General characteristics

General description for residential breakers 6

Miniature circuit breakers

1, 2, 3 and 4pole series up to 125AF

- BKP 8
- BKN, BKN-b, BKH 9

Miniature circuit breakers

60mm depth miniature circuit breakers, BF Series 10

- BF-a, BF-c 10
- BF, BFa-LUG, BF-PLUG 11

Residual current circuit breakers

- RKP, RKN 12
- 32KGRa, 32KGRb, BKD 13

Miniature circuit breakers

DIN rail mounting

- BKP type 14
- BKN type 15
- BKN-b type 22
- BKH type 29
- Residual current circuit breakers, RKP & KGR type 30
- Residual current circuit breakers, RKN type 32
- Switch disconnector, BKD type 33

Residential Breakers

Bolt on mounting

- 60mm depth twin breakers, ABS-Fb & EBS-Fb type 34
- 60mm depth miniature circuit breakers, BF type 36
- 60mm depth & Lug terminal connection 38
- 42mm depth twin breakers, BS & GR type 40

Standard busbars 42

Operating curves & temperature compensation

- BKP, BKN, BKN-b, BKH, RKP, 32KGRa, 32KGRb 43
- ABS32Fb, ABS33Fb, ABS52Fb, ABS53Fb, EBS32Fb, EBS33Fb, EBS52Fb, EBS53Fb, ABS52Fb, ABS53Fb, EBS52Fb, EBS53Fb 44
- ABS102Fb, ABS103Fb, EBS102Fb, EBS103Fb, BS-31a, BS-32a 45
- BF-a, BF-c, BF 46
- BFa-LUG, BF-PLUG 47
- 32GRa, 32GRh, 33GR, 52GRa 48

Overall dimensions

- BKP, BKN, BKN-b, BKH 49
- RKP, RKN, 32KGRa, BKD 50
- ABS32Fb, ABS33Fb, ABS52Fb, ABS53Fb, EBS32Fb, EBS33Fb, EBS52Fb, EBS53Fb 51
- ABS102Fb, ABS103Fb, EBS102Fb, EBS103Fb 52
- BF-a, BF-c 53
- BF 54
- BFa-LUG, BF-PLUG 55
- BS-31a, BS-32a, BS-33 56
- 52GRa, 32GRa, 33GR, 30GRh, 32GRh 57

Environmental policy and RoHS compliance

What is RoHS?

The RoHS (Restriction of Hazardous Substances) is an EU Directive that specifically identifies six key materials so that manufacturers are held responsible for ensuring that their products contain controlled concentrations of the six substances restricted by the Directive.

The Six Hazardous Substances: Below 1,000ppm of Lead (Pb), Mercury (Hg), Hexavalent Chromium (Cr+6), Polybrominated Biphenyls (PBB) and Polybrominated Biphenyl Ethers (PBDE), and below 100ppm of Cadmium (Cd).

▶RoHS : Directive on the Restriction of Hazardous Substances in the Electronic Equipment (Effective on February 13, 2003)

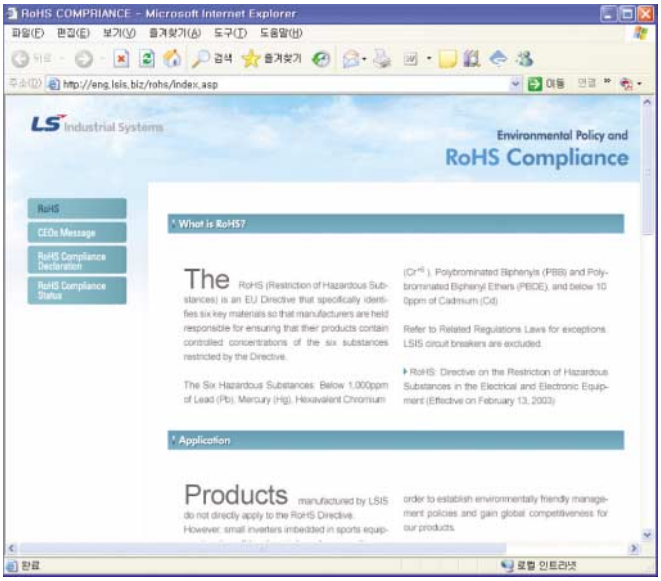

Application

Products manufactured by LSIS do not directly apply to the RoHS Directive.
However, small inverters imbedded in sport equipment and small breakers in large home appliances can be indirectly applied to the Directive.

LSIS continues to comply with the RoHS directive in order to establish environmentally Friendly management policies and global competitiveness for our products.

According to the Law, eight of the 10 WEEE products excluding 'medical equipment' and 'control systems' must be RoHS compliant.

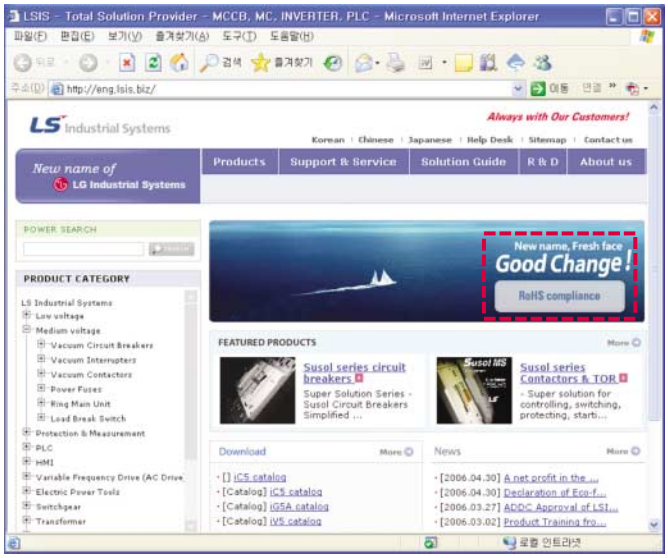

Declaration of RoHS Compliance

LS Industrial System Co.,Ltd
Yonsei Jaedan Severance Bldg.,84-11, Namdaemunno 5-ga,
Jung-gu, Seoul. 100-733, Korea (Manufacturer)

Do hereby confirm that
With relevance of the EU Directive 2002/95/EC of 27 January 2003 on the Restriction of the use of certain Hazardous Substances in electrical and electronic equipment –RoHS , our listed products do not contain any of the following banned substances listed below :

Lead
Mercury
Cadmium
Hexavalent Chromium
Polybrominated Biphenyls (PBB)
Polybrominated Diphenyl Ethers (PBDE)

The following products sold as of July 1, 2006 will be RoHS compliant.

Products Note)
Molded Case Circuit Breaker (MCCB) *
Earth Leakage Circuit Breaker (ELCB)
Magnetic Switch (MC,TOR)
Manual Motor Starter (MMS)
Protection & Measurement device
Programmable Logic Controller (PLC)
Variable Frequency Drive (AC Driver)

Note) Please visit www.lsis.biz and see "RoHS Compliance" menu to verify the specification of each product's "RoHS Compliance"
* Miniature Circuit Breaker [MCB] is included in the category of Molded Case Circuit Break [MCCB]

Place/Date : Korea/ April 4, 2006

LS Industrial Systems President & CEO **Chung-Man KIM**

Chungman Kim

LS Industrial Systems

General characteristics

General description for residential breakers

Miniature Circuit Breakers

DIN rail mounting

45mm slot size
17.8mm width per pole

Type BKN-b

IEC60898 type MCB
1 to 4pole up to 63A & 10kA

see details (p. 22)

Type BKN

IEC60898 type MCB
1 to 4pole up to 63A & 6kA

see details (p. 15)

Bolt on

50mm slot size
60mm depth

see details (p. 36)

Type BF

American type MCB
1 to 3pole up to
100A & 10kA (BF-a)
100A & 5kA (BF-c)
50A & 2.5kA (BF)
100A & 10kA
(BFa-LUG; 3 pole only)

see details (p. 34)

Type ABS-Fb

IEC type MCCB
2 & 3pole up to
100A & 10kA

Bolt on

36mm slot size
42mm depth

see details (p. 40)

Type BS

Economic type MCCB
2 & 3pole up to 30A
& 1.5kA

Plug in

56mm slot size
60mm depth

see details (p. 38)

Type BF-Plug

1 to 3pole up to
50A, 10kA
Connection by
lug terminal

Residual Current Circuit Breakers

Type RKN

IEC1008 type RCCB
2 & 4pole up to 63A
$I_{\Delta n}$=30, 100, 300mA

see details (p. 32)

Type KGR

Electronic type RCCB
2pole up to 30A, 1.5kA
$I_{\Delta n}$=30mA

see details (p. 30)

Type EBS-Fb

Electronic type RCCB
2 & 3pole up to 100A, 10kA
$I_{\Delta n}$=30, 100mA

see details (p. 34)

Type GR

Electronic type RCCB
2 & 3pole up to 30A, 2.5kA
$I_{\Delta n}$=30mA

see details (p. 40)

Miniature circuit breakers

1, 2, 3 and 4Pole Series up to 125AF [IEC 60898, IEC 60947-2]

Type		BKN		BKN-b	
Protection		Overload and short circuit		Overload and short circuit	
Rated current		1, 2, 3, 4, 6, 10, 16, 20, 25, 32, 40, 50, 63A		1, 2, 3, 4, 6, 10, 16, 20, 25, 32, 40, 50, 63A	
Characteristic		B, C, D curve		B, C, D curve	
Poles		1p, 1p+N, 2p, 3p, 3p+N, 4p		1p, 1p+N, 2p, 3p, 3p+N, 4p	
Breaking capacity		1pole	2~4pole	1pole	2~4pole
	1A	6kA at 230/400VAC	6kA at 400VAC	10kA at 230/400VAC	10kA at 400VAC
	2A				
	3A				
	4A				
	6A				
	10A				
	16A				
	20A				
	25A				
	32A				
	40A				
	50A				
	63A				
	80A				
	100A				
	125A				
Standard		IEC 60898		IEC 60898	
Approval		CCC, SABS, SEMKO CB		CCC†, KEMA CB, SABS, SEMKO CB, UL 1077†	
Type of trip		Thermal magnetic release		Thermal magnetic release	
Electrical endurance		6000 operations		8000 operations	
Mount		On 35mm DIN rail		On 35mm DIN rail	
Width		17.8mm per pole		17.8mm per pole	
Terminal		Lug type(cable up to 25mm²)		Lug type(cable up to 25mm²)	
Auxiliary switch, AX & AL **Optional**		 **1 changeover contact** 6A at 240VAC, 3A at 415VAC(AX) 6A at 230VAC, 3A at 415VAC(AL) 2A at 48VDC, 1A at 125VDC **Lug terminal** Cable capacity 2.5mm^2 **9mm wide**			
Dimension		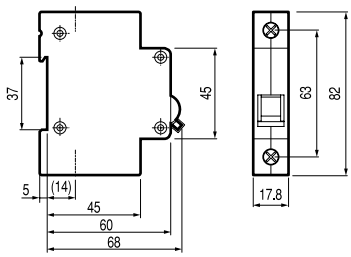		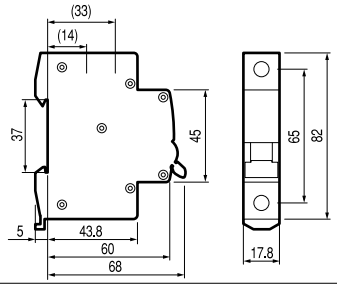	
Characteristic curve		See page 43		See page 43	
Remarks				†UL 1077(240V 10kA)	

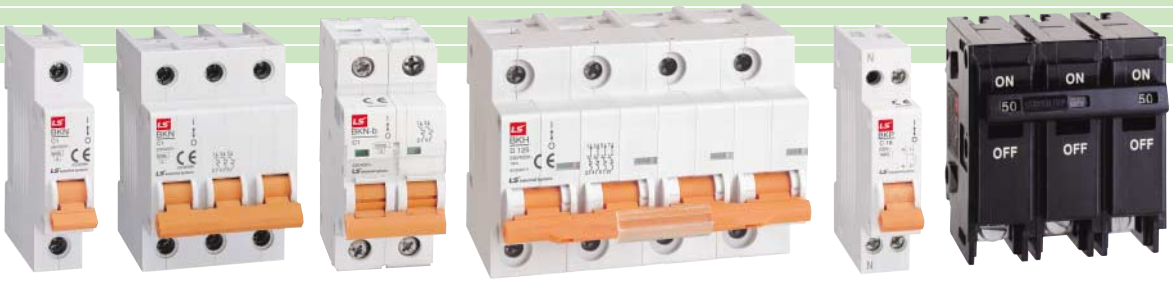

MCB

BKH		BKP	BF-PLUG
Overload and short circuit		Overload and short circuit	Overload and short circuit
63, 80, 100A, 125A		3, 6, 10, 16, 20, 25, 32A	10, 15, 20, 30, 40, 50A
C, D curve		B, C, D curve	1P, 2P, 3P
1p, 2p, 3p, 3p+N, 4p		1p+N	1P, 2P, 3P
1pole	2~4pole		
		4.5kA at 230VAC	
			10kA at 120/240VAC
10kA at 230/400VAC	10kA at 400VAC		
IEC 60947-2		IEC 60898	IEC 60947-2
CCC, CQC CB†		CCC, CQC CB	
Thermal magnetic release		Thermal magnetic release	Thermal magnetic release
6000 operations		20000 operations	10, 000 operations
On 35mm DIN rail		On 35mm DIN rail	Plug-in
27mm per pole		9mm per pole	25mm per pole
Lug type(cable up to 50mm²)		Lug type(cable up to 10mm²)	Lug type (14-6 AWG.)
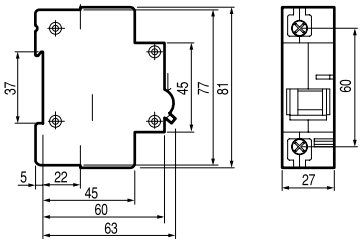		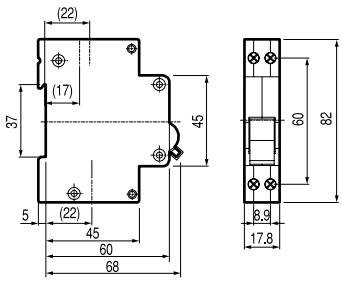	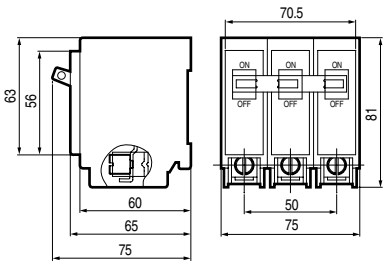
See page 43		See page 43	See page 47
IEC 60947-2 (SABS)			

60mm depth miniature circuit breakers, BF Series [IEC 60947-2]

Type		BF-a	
Protection		Overload and short circuit	
Rated current		10, 15, 20, 30, 40, 50, 60, 75, 100A	
Poles		1P, 2P, 3P	
Breaking capacity		1P	2P, 3P
	6A		
	10A	10kA at 240VAC	10kA at 240VAC 2.5kA at 415VAC
	15A		
	20A		
	30A		
	40A		
	50A		
	60A		
	75A		
	100A		
Standard		IEC 60947-2	
Type of trip		Thermal magnetic release	
Electrical endurance		10, 000 operations	
Mount		Holder mounting	
Width		25mm per pole	
Terminal		Clamp type	
Auxiliary switch, AX & AL **Optional**			
Dimension		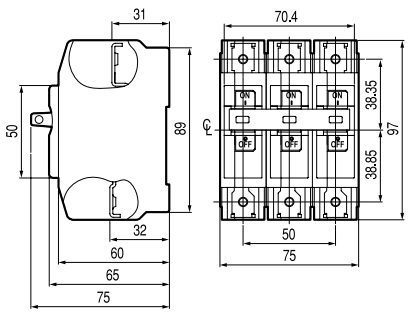	
Characteristic curve		See page 46	

BF-Series

BF-c		BF	BFa-LUG
Overload and short circuit		Overload and short circuit	Overload and short circuit
10, 15, 20, 30, 40, 50, 60, 75, 100A		6, 10, 15, 20, 30, 40, 50A	10, 15, 20, 30, 40, 50, 60, 75, 100A
1P, 2P, 3P		1P, 2P	3P
1P	2P, 3P	1P, 2P	3P
5kA at 240VAC	5kA at 240VAC 2.5kA at 415VAC	2.5kA at 240VAC	10kA at 240VAC 2.5kA at 415VAC
IEC 60947-2		IEC 60947-2	IEC 60947-2
Thermal magnetic release		Thermal magnetic release	Thermal magnetic release
10, 000 operations		10, 000 operations	10, 000 operations
Holder mounting		Holder mounting	Holder mounting
25mm per pole		25mm per pole	75mm
Clamp type		Clamp type	Lug type (14-1 AWG.)
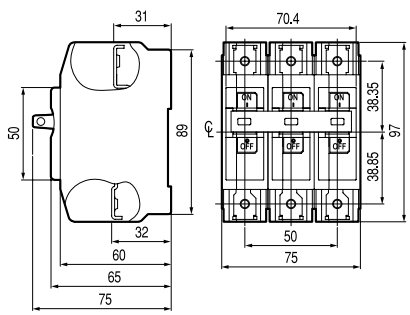		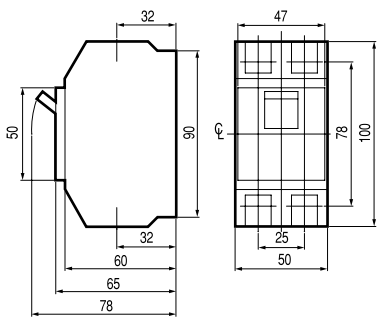	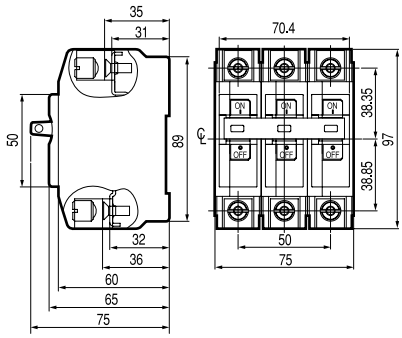
See page 46		See page 46	See page 46

Residual current circuit breakers

2 and 4pole series up to 63AF

Type	RCBO		RCCB
	RKP	RKS	RKN
Protection	Ground fault and overcurrent	Ground fault and overcurrent	Ground fault
Rated current, In	3(C, D), 6, 10, 16, 20, 25, 32A (B, C, D curve)	6, 10, 16, 20, 25, 32A (B, C curve)	25, 32, 40, 63A
Rated residual current			
Operating, $I_{\triangle n}$	30, 100, 300mA(non-adjustable)	30, 100mA (non-adjustable)	30, 100, 300mA(non-adjustable)
Non-operating, $I_{\triangle no}$	$0.5I_{\triangle n}$	$0.5I_{\triangle n}$	$0.5I_{\triangle n}$
Poles	1P+N	1P+N	2, 4pole
Rated voltage	230VAC	230VAC	230VAC(2p), 230/400VAC(4p)
Residual current off-time	±0.1 sec.	≤0.1sec.	±0.1 sec.
Standard	IEC 61009	IEC 61009	IEC 61008
Approval	CCC, CQC CB	SEMKO CB	CCC, SEMKO CB, SABS
Type of trip			
Ground fault	Electro-magnetic	Electro-magnetic	Electro-magnetic
Overcurrent	Thermal-magnetic	Thermal-magnetic	Not applicable
Breaking capacity	4.5kA	10kA	
Conditional short		-	6kA for In=25, 32, 40, 63A
circuit capacity			
Electrical endurance	20000 operations	≤4000 operations	6000 operations
Mount	On 35mm DIN rail	On 35mm DIN rail	On 35mm DIN rail
Width	35.6mm	18mm	18mm
Terminal	Lug type(cable up to 10mm²)	Lug type(cable up to 10mm²)	Lug type(cable up to 35mm²)
Dimension	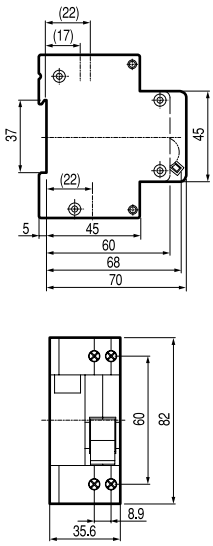		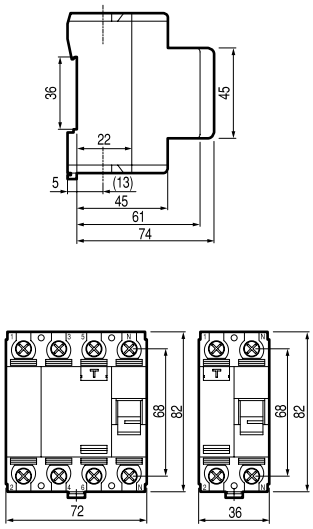
Characteristic curve	See page 43	See page 43	

RCBO	
32KGRa	32KGRb
Ground fault and overcurrent	
15, 20, 30A	
15, 30mA(non-adjustable)	
$0.5I_{\triangle n}$	
2pole	
110/220VAC	
±0.03 sec.	
KS, JIS (IEC 61009) *	
Electronic	
Bimetallic	
1.5kA	2.5kA
6000 operations	
On 35mm DIN rail	
35mm	
Screw clamp type(cable up to 25mm²)	

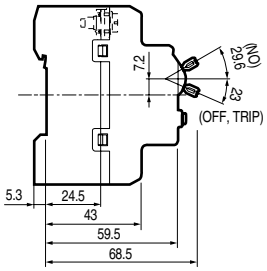

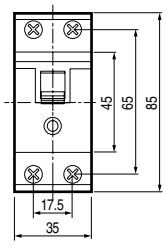

See page 43

Note) *IEC 61009 standard is applicable for 32KGRa

Isolator		
Type		BKD
Rated current, In		40, 50, 63, 80, 100, 125A
Poles		1p, 2p, 3p, 4p
Rated voltage		230/400VAC
Standard		IEC 60947-3
Approval		SABS
Electrical endurance	**40, 50, 63A**	20000 operations
	80, 100, 125A	10000 operations
Mount		On 35mm DIN rail
Width		17.8mm per pole
Terminal		Lug type(cable up to 50mm²)
Dimension		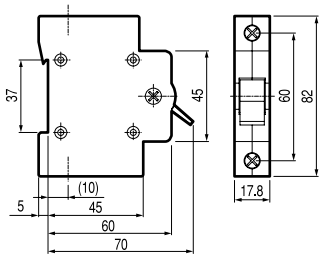

Miniature circuit breakers

DIN rail mounting

CE 4500

BKP type

BKP 1P+N

Technical data

Standard	Confirming to IEC60898
Approval	CCC, CQC CB
Protection	Overload and short circuit
Rated current In	3, 6, 10, 16, 20, 25, 32A
Rated voltage	230VAC
Breaking capacity	4.5kA
Characteristic	B, C, D curve
Number of poles	1P+N
Type of trip	Thermal magnetic release
Type of terminal	Lug type
Terminal capacity	Cables up to 10mm^2
Installation	Mounting on 35mm DIN rail
Width	17.8mm per pole
Electrical endurance	20000 cycles

Certificate
CE

Catalog No.

Pole	Type	In	Model	Catalog No.	Pack. unit (Pcs.)	PRICE
1P+N	B curve	3A	BKP B3A	06120302R0	120	
		6A	BKP B6A	06120228R0	120	
		10A	BKP B10A	06120229R0	120	
		16A	BKP B16A	06120230R0	120	
		20A	BKP B20A	06120231R0	120	
		25A	BKP B25A	06120303R0	120	
		32A	BKP B32A	06120232R0	120	
	C curve	3A	BKP C3A	06120307R0	120	
		6A	BKP C6A	06120235R0	120	
		10A	BKP C10A	06120236R0	120	
		16A	BKP C16A	06120237R0	120	
		20A	BKP C20A	06120238R0	120	
		25A	BKP C25A	06120309R0	120	
		32A	BKP C32A	06120239R0	120	
	D curve	3A	BKP D3A	06120308R0	120	
		6A	BKP D6A	06120242R0	120	
		10A	BKP D10A	06120243R0	120	
		16A	BKP D16A	06120244R0	120	
		20A	BKP D20A	06120245R0	120	
		25A	BKP D25A	06120311R0	120	
		32A	BKP D32A	06120246R0	120	

BKN type

BKN 2P

Technical data

Standard	Confirming to IEC60898	
Approval	CCC, SABS, SEMKO CB	
Protection	Against overload and short circuit	
Rated current In	1, 2, 3, 4, 6, 10, 16, 20, 25, 32, 40, 50, 63A	
Rated voltage	1pole 230/400VAC 50/60Hz 2, 3, 4pole 400VAC 50/60Hz	
Breaking capacity	6kA	
Characteristic	B, C, D curve	
Number of poles	1P, 1P+N, 2P, 3P, 3P+N and 4P	
Type of trip	Thermal-magnetic release	
Type of terminal	Lug type	
Terminal capacity	Cables up to 25mm²	
Installation	Mounting on 35mm DIN rail	
Width	17.8mm per pole	
Electrical endurance		
In	**1 ... 32A**	**40 ... 63A**
Endurance	6000 cycles	6000 cycles
Max. frequency (Cycles/hour)	240	120

Certificate
CE

Optional accessories ... Auxiliary switch, AX

Composition	Consists of 1 changeover contact	
Rating	**AC circuit**	**DC circuit**
	6A at 240VAC	2A at 48VDC
	3A at 415VAC	1A at 125VDC
Type of terminal	Lug type	
Terminal capacity	Cables up to 2.5mm²	
Width	9mm	

Optional accessories ... Auxiliary switch, AL

Composition	Consists of 1 changeover contact	
Rating	**AC circuit**	**DC circuit**
	6A at 230VAC	2A at 48VDC
	3A at 415VAC	1A at 125VDC
Type of terminal	Lug type	
Terminal capacity	Cables up to 2.5mm²	
Width	9mm	

Miniature circuit breakers

DIN rail mounting

CE 6000 3

BKN type, B curve

BKN 1P

BKN 1P+N

BKN 2P

Catalog No.

6kA at 230/400VAC

In	Model	Catalog No.	Pack. unit (Pcs.)	PRICE
1A	BKN 1P B1A	06110086R0	120	
2A	BKN 1P B2A	06110087R0	120	
3A	BKN 1P B3A	06110088R0	120	
4A	BKN 1P B4A	06110089R0	120	
6A	BKN 1P B6A	06110090R0	120	
10A	BKN 1P B10A	06110091R0	120	
16A	BKN 1P B16A	06110092R0	120	
20A	BKN 1P B20A	06110093R0	120	
25A	BKN 1P B25A	06110094R0	120	
32A	BKN 1P B32A	06110095R0	120	
40A	BKN 1P B40A	06110096R0	120	
50A	BKN 1P B50A	06110097R0	120	
63A	BKN 1P B63A	06110098R0	120	

6kA at 230/400VAC

In	Model	Catalog No.	Pack. unit (Pcs.)	PRICE
1A	BKN 1P+N B1A	06120250R0	60	
2A	BKN 1P+N B2A	06120251R0	60	
3A	BKN 1P+N B3A	06120252R0	60	
4A	BKN 1P+N B4A	06120253R0	60	
6A	BKN 1P+N B6A	06120254R0	60	
10A	BKN 1P+N B10A	06120255R0	60	
16A	BKN 1P+N B16A	06120256R0	60	
20A	BKN 1P+N B20A	06120257R0	60	
25A	BKN 1P+N B25A	06120258R0	60	
32A	BKN 1P+N B32A	06120259R0	60	
40A	BKN 1P+N B40A	06120260R0	60	
50A	BKN 1P+N B50A	06120261R0	60	
63A	BKN 1P+N B63A	06120262R0	60	

6kA at 400VAC

In	Model	Catalog No.	Pack. unit (Pcs.)	PRICE
1A	BKN 2P B1A	06120263R0	60	
2A	BKN 2P B2A	06120264R0	60	
3A	BKN 2P B3A	06120265R0	60	
4A	BKN 2P B4A	06120266R0	60	
6A	BKN 2P B6A	06120267R0	60	
10A	BKN 2P B10A	06120268R0	60	
16A	BKN 2P B16A	06120269R0	60	
20A	BKN 2P B20A	06120270R0	60	
25A	BKN 2P B25A	06120271R0	60	
32A	BKN 2P B32A	06120272R0	60	
40A	BKN 2P B40A	06120273R0	60	
50A	BKN 2P B50A	06120274R0	60	
63A	BKN 2P B63A	06120275R0	60	

BKN type, B curve

BKN 3P

BKN 3P+N

BKN 4P

Catalog No.

6kA at 400VAC

In	Model	Catalog No.	Pack. unit (Pcs.)	PRICE
1A	BKN 3P B1A	06130066R0	40	
2A	BKN 3P B2A	06130067R0	40	
3A	BKN 3P B3A	06130068R0	40	
4A	BKN 3P B4A	06130069R0	40	
6A	BKN 3P B6A	06130070R0	40	
10A	BKN 3P B10A	06130071R0	40	
16A	BKN 3P B16A	06130072R0	40	
20A	BKN 3P B20A	06130073R0	40	
25A	BKN 3P B25A	06130074R0	40	
32A	BKN 3P B32A	06130075R0	40	
40A	BKN 3P B40A	06130076R0	40	
50A	BKN 3P B50A	06130077R0	40	
63A	BKN 3P B63A	06130078R0	40	

6kA at 400VAC

In	Model	Catalog No.	Pack. unit (Pcs.)	PRICE
1A	BKN 3P+N B1A	06140133R0	30	
2A	BKN 3P+N B2A	06140134R0	30	
3A	BKN 3P+N B3A	06140135R0	30	
4A	BKN 3P+N B4A	06140136R0	30	
6A	BKN 3P+N B6A	06140137R0	30	
10A	BKN 3P+N B10A	06140138R0	30	
16A	BKN 3P+N B16A	06140139R0	30	
20A	BKN 3P+N B20A	06140140R0	30	
25A	BKN 3P+N B25A	06140141R0	30	
32A	BKN 3P+N B32A	06140142R0	30	
40A	BKN 3P+N B40A	06140143R0	30	
50A	BKN 3P+N B50A	06140144R0	30	
63A	BKN 3P+N B63A	06140145R0	30	

6kA at 400VAC

In	Model	Catalog No.	Pack. unit (Pcs.)	PRICE
1A	BKN 4P B1A	06140146R0	30	
2A	BKN 4P B2A	06140147R0	30	
3A	BKN 4P B3A	06140148R0	30	
4A	BKN 4P B4A	06140149R0	30	
6A	BKN 4P B6A	06140150R0	30	
10A	BKN 4P B10A	06140151R0	30	
16A	BKN 4P B16A	06140152R0	30	
20A	BKN 4P B20A	06140153R0	30	
25A	BKN 4P B25A	06140154R0	30	
32A	BKN 4P B32A	06140155R0	30	
40A	BKN 4P B40A	06140156R0	30	
50A	BKN 4P B50A	06140157R0	30	
63A	BKN 4P B63A	06140158R0	30	

Auxiliary switch 1c contact

In	Model	Catalog No.	Pack. unit (Pcs.)	PRICE
6A	BKN-AX-6A	06150002R0		
6A	BKN-AL-6A	06150004R0		

Miniature circuit breakers

DIN rail mounting

CE 6000 3

BKN type, C curve

BKN 1P

BKN 1P+N

BKN 2P

Catalog No.

6kA at 230/400VAC

In	Model	Catalog No.	Pack. unit (Pcs.)	PRICE
1A	BKN 1P C1A	06110070R0	120	
2A	BKN 1P C2A	06110071R0	120	
3A	BKN 1P C3A	06110072R0	120	
4A	BKN 1P C4A	06110073R0	120	
6A	BKN 1P C6A	06110074R0	120	
10A	BKN 1P C10A	06110075R0	120	
16A	BKN 1P C16A	06110076R0	120	
20A	BKN 1P C20A	06110077R0	120	
25A	BKN 1P C25A	06110078R0	120	
32A	BKN 1P C32A	06110079R0	120	
40A	BKN 1P C40A	06110080R0	120	
50A	BKN 1P C50A	06110081R0	120	
63A	BKN 1P C63A	06110082R0	120	

6kA at 230/400VAC

In	Model	Catalog No.	Pack. unit (Pcs.)	PRICE
1A	BKN 1P+N C1A	06120200R0	60	
2A	BKN 1P+N C2A	06120201R0	60	
3A	BKN 1P+N C3A	06120202R0	60	
4A	BKN 1P+N C4A	06120203R0	60	
6A	BKN 1P+N C6A	06120204R0	60	
10A	BKN 1P+N C10A	06120205R0	60	
16A	BKN 1P+N C16A	06120206R0	60	
20A	BKN 1P+N C20A	06120207R0	60	
25A	BKN 1P+N C25A	06120208R0	60	
32A	BKN 1P+N C32A	06120209R0	60	
40A	BKN 1P+N C40A	06120210R0	60	
50A	BKN 1P+N C50A	06120211R0	60	
63A	BKN 1P+N C63A	06120212R0	60	

6kA at 400VAC

In	Model	Catalog No.	Pack. unit (Pcs.)	PRICE
1A	BKN 2P C1A	06120213R0	60	
2A	BKN 2P C2A	06120214R0	60	
3A	BKN 2P C3A	06120215R0	60	
4A	BKN 2P C4A	06120216R0	60	
6A	BKN 2P C6A	06120217R0	60	
10A	BKN 2P C10A	06120218R0	60	
16A	BKN 2P C16A	06120219R0	60	
20A	BKN 2P C20A	06120220R0	60	
25A	BKN 2P C25A	06120221R0	60	
32A	BKN 2P C32A	06120222R0	60	
40A	BKN 2P C40A	06120223R0	60	
50A	BKN 2P C50A	06120224R0	60	
63A	BKN 2P C63A	06120225R0	60	

BKN type, C curve

BKN 3P

BKN 3P+N

BKN 4P

Catalog No.

6kA at 400VAC

In	Model	Catalog No.	Pack. unit (Pcs.)	PRICE
1A	BKN 3P C1A	06130050R0	40	
2A	BKN 3P C2A	06130051R0	40	
3A	BKN 3P C3A	06130052R0	40	
4A	BKN 3P C4A	06130053R0	40	
6A	BKN 3P C6A	06130054R0	40	
10A	BKN 3P C10A	06130055R0	40	
16A	BKN 3P C16A	06130056R0	40	
20A	BKN 3P C20A	06130057R0	40	
25A	BKN 3P C25A	06130058R0	40	
32A	BKN 3P C32A	06130059R0	40	
40A	BKN 3P C40A	06130060R0	40	
50A	BKN 3P C50A	06130061R0	40	
63A	BKN 3P C63A	06130062R0	40	

6kA at 400VAC

In	Model	Catalog No.	Pack. unit (Pcs.)	PRICE
1A	BKN 3P+N C1A	06140104R0	30	
2A	BKN 3P+N C2A	06140105R0	30	
3A	BKN 3P+N C3A	06140106R0	30	
4A	BKN 3P+N C4A	06140107R0	30	
6A	BKN 3P+N C6A	06140108R0	30	
10A	BKN 3P+N C10A	06140109R0	30	
16A	BKN 3P+N C16A	06140110R0	30	
20A	BKN 3P+N C20A	06140111R0	30	
25A	BKN 3P+N C25A	06140112R0	30	
32A	BKN 3P+N C32A	06140113R0	30	
40A	BKN 3P+N C40A	06140114R0	30	
50A	BKN 3P+N C50A	06140115R0	30	
63A	BKN 3P+N C63A	06140116R0	30	

6kA at 400VAC

In	Model	Catalog No.	Pack. unit (Pcs.)	PRICE
1A	BKN 4P C1A	06140117R0	30	
2A	BKN 4P C2A	06140118R0	30	
3A	BKN 4P C3A	06140119R0	30	
4A	BKN 4P C4A	06140120R0	30	
6A	BKN 4P C6A	06140121R0	30	
10A	BKN 4P C10A	06140122R0	30	
16A	BKN 4P C16A	06140123R0	30	
20A	BKN 4P C20A	06140124R0	30	
25A	BKN 4P C25A	06140125R0	30	
32A	BKN 4P C32A	06140126R0	30	
40A	BKN 4P C40A	06140127R0	30	
50A	BKN 4P C50A	06140128R0	30	
63A	BKN 4P C63A	06140129R0	30	

Auxiliary switch 1c contact

In	Model	Catalog No.	Pack. unit (Pcs.)	PRICE
6A	BKN-AX-6A	06150002R0		
6A	BKN-AL-6A	06150004R0		

BKN type, D curve

BKN 1P

BKN 1P+N

BKN 2P

Catalog No.

6kA at 230/400VAC

In	Model	Catalog No.	Pack. unit (Pcs.)	PRICE
1A	BKN 1P D1A	06110099R0	120	
2A	BKN 1P D2A	06110100R0	120	
3A	BKN 1P D3A	06110101R0	120	
4A	BKN 1P D4A	06110102R0	120	
6A	BKN 1P D6A	06110103R0	120	
10A	BKN 1P D10A	06110104R0	120	
16A	BKN 1P D16A	06110105R0	120	
20A	BKN 1P D20A	06110106R0	120	
25A	BKN 1P D25A	06110107R0	120	
32A	BKN 1P D32A	06110108R0	120	
40A	BKN 1P D40A	06110109R0	120	
50A	BKN 1P D50A	06110110R0	120	
63A	BKN 1P D63A	06110111R0	120	

6kA at 230/400VAC

In	Model	Catalog No.	Pack. unit (Pcs.)	PRICE
1A	BKN 1P+N D1A	06120276R0	60	
2A	BKN 1P+N D2A	06120277R0	60	
3A	BKN 1P+N D3A	06120278R0	60	
4A	BKN 1P+N D4A	06120279R0	60	
6A	BKN 1P+N D6A	06120280R0	60	
10A	BKN 1P+N D10A	06120281R0	60	
16A	BKN 1P+N D16A	06120282R0	60	
20A	BKN 1P+N D20A	06120283R0	60	
25A	BKN 1P+N D25A	06120284R0	60	
32A	BKN 1P+N D32A	06120285R0	60	
40A	BKN 1P+N D40A	06120286R0	60	
50A	BKN 1P+N D50A	06120287R0	60	
63A	BKN 1P+N D63A	06120288R0	60	

6kA at 400VAC

In	Model	Catalog No.	Pack. unit (Pcs.)	PRICE
1A	BKN 2P D1A	06120289R0	60	
2A	BKN 2P D2A	06120290R0	60	
3A	BKN 2P D3A	06120291R0	60	
4A	BKN 2P D4A	06120292R0	60	
6A	BKN 2P D6A	06120293R0	60	
10A	BKN 2P D10A	06120294R0	60	
16A	BKN 2P D16A	06120295R0	60	
20A	BKN 2P D20A	06120296R0	60	
25A	BKN 2P D25A	06120297R0	60	
32A	BKN 2P D32A	06120298R0	60	
40A	BKN 2P D40A	06120299R0	60	
50A	BKN 2P D50A	06120300R0	60	
63A	BKN 2P D63A	06120301R0	60	

BKN type, D curve

BKN 3P

BKN 3P+N

BKN 4P

Catalog No.

6kA at 400VAC

In	Model	Catalog No.	Pack. unit (Pcs.)	PRICE
1A	BKN 3P D1A	06130079R0	40	
2A	BKN 3P D2A	06130080R0	40	
3A	BKN 3P D3A	06130081R0	40	
4A	BKN 3P D4A	06130082R0	40	
6A	BKN 3P D6A	06130083R0	40	
10A	BKN 3P D10A	06130084R0	40	
16A	BKN 3P D16A	06130085R0	40	
20A	BKN 3P D20A	06130086R0	40	
25A	BKN 3P D25A	06130087R0	40	
32A	BKN 3P D32A	06130088R0	40	
40A	BKN 3P D40A	06130089R0	40	
50A	BKN 3P D50A	06130090R0	40	
63A	BKN 3P D63A	06130091R0	40	

6kA at 400VAC

In	Model	Catalog No.	Pack. unit (Pcs.)	PRICE
1A	BKN 3P+N D1A	06140159R0	30	
2A	BKN 3P+N D2A	06140160R0	30	
3A	BKN 3P+N D3A	06140161R0	30	
4A	BKN 3P+N D4A	06140162R0	30	
6A	BKN 3P+N D6A	06140163R0	30	
10A	BKN 3P+N D10A	06140164R0	30	
16A	BKN 3P+N D16A	06140165R0	30	
20A	BKN 3P+N D20A	06140166R0	30	
25A	BKN 3P+N D25A	06140167R0	30	
32A	BKN 3P+N D32A	06140168R0	30	
40A	BKN 3P+N D40A	06140169R0	30	
50A	BKN 3P+N D50A	06140170R0	30	
63A	BKN 3P+N D63A	06140171R0	30	

6kA at 400VAC

In	Model	Catalog No.	Pack. unit (Pcs.)	PRICE
1A	BKN 4P D1A	06140172R0	30	
2A	BKN 4P D2A	06140173R0	30	
3A	BKN 4P D3A	06140174R0	30	
4A	BKN 4P D4A	06140175R0	30	
6A	BKN 4P D6A	06140176R0	30	
10A	BKN 4P D10A	06140177R0	30	
16A	BKN 4P D16A	06140178R0	30	
20A	BKN 4P D20A	06140179R0	30	
25A	BKN 4P D25A	06140180R0	30	
32A	BKN 4P D32A	06140181R0	30	
40A	BKN 4P D40A	06140182R0	30	
50A	BKN 4P D50A	06140183R0	30	
63A	BKN 4P D63A	06140184R0	30	

Auxiliary switch 1c contact

In	Model	Catalog No.	Pack. unit (Pcs.)	PRICE
6A	BKN-AX-6A	06150002R0		
6A	BKN-AL-6A	06150004R0		

Miniature circuit breakers

DIN rail mounting

CE 10000 3

High rupturing capacity

BKN-b type

BKN-b 2P

Certificate
CE

Patent protection

Technical data

Standard		Confirming to IEC60898	
Approval		CCC†, KEMA CB, SABS, SEMKO CB, UL 1077†	
Protection		Against overload and short circuit	
Rated current In		1, 2, 3, 4, 6, 10, 16, 20, 25, 32, 40, 50, 63A	
Rated voltage		1pole 230/400VAC 50/60Hz 2, 3, 4pole 400VAC 50/60Hz	
Ambient temperature		-5˚C to +40˚C pursuant to IEC60898	
Breaking capacity		10kA	
Characteristic		B, C, D curve	
Number of poles		1P, 1P+N, 2P, 3P, 3P+N and 4P	
Type of trip		Thermal-magnetic release	
Type of terminal		Lug type	
Terminal capacity		Cables up to 25mm²	
Installation		Mounting on 35mm DIN rail	
Width		17.8mm per pole	
Electrical endurance			
	In	**1 ... 32A**	**40 ... 63A**
	Endurance	8000 cycles	8000 cycles
	Max. frequency (Cycles/hour)	240	120

Influence of ambient temperature on nominal currents

Nominal current of MCB (A)	Internally resis-tance (mohm)	Power loss (W)	Max. impedance of impedance loop (Ohm)			Thermal correction of nominal currents				
			Character			Ambient temperature				
			B	C	D	20˚C	30˚C	40˚C	50˚C	60˚C
1	1215.69	1.24	46.20	25.70	14.40	1.05	1	0.95	0.90	0.85
2	343.28	1.38	21.60	12.02	6.73	2.08	2	1.92	1.84	1.74
3	128.09	1.15	16.90	9.40	5.26	3.18	3	2.82	2.61	2.37
4	105.53	1.68	10.68	5.94	3.33	4.24	4	3.76	3.52	3.24
6	29.22	1.08	7.14	3.97	2.22	6.24	6	5.76	5.52	5.30
10	14.49	1.55	3.87	2.15	1.21	10.60	10	9.30	8.60	7.80
16	10.00	2.56	2.24	1.25	0.70	16.80	16	15.20	14.20	13.30
20	8.02	3.32	1.55	0.86	0.48	21.00	20	19.00	17.80	16.80
25	3.11	2.00	2.43	1.35	0.76	26.20	25	23.70	22.20	20.70
32	3.05	3.17	1.27	0.71	0.40	33.50	32	30.40	28.40	27.50
40	2.16	3.40	0.60	0.33	0.19	42.00	40	38.00	35.60	33.20
50	1.65	4.20	0.71	0.39	0.22	52.50	50	47.40	44.00	40.50
63	1.68	6.30	0.47	0.32	0.15	66.20	63	58.00	54.20	49.20

BKN-b type, B curve

Catalog No.

BKN-b 1P

10kA at 230/400VAC

In	Model	Catalog No.	Pack. unit (Pcs.)	PRICE
1A	BKN-b 1P B1A	06110160R0	120	
2A	BKN-b 1P B2A	06110161R0	120	
3A	BKN-b 1P B3A	06110162R0	120	
4A	BKN-b 1P B4A	06110163R0	120	
6A	BKN-b 1P B6A	06110164R0	120	
10A	BKN-b 1P B10A	06110165R0	120	
16A	BKN-b 1P B16A	06110166R0	120	
20A	BKN-b 1P B20A	06110167R0	120	
25A	BKN-b 1P B25A	06110168R0	120	
32A	BKN-b 1P B32A	06110169R0	120	
40A	BKN-b 1P B40A	06110170R0	120	
50A	BKN-b 1P B50A	06110171R0	120	
63A	BKN-b 1P B63A	06110172R0	120	

BKN-b 1P+N

10kA at 230/400VAC

In	Model	Catalog No.	Pack. unit (Pcs.)	PRICE
1A	BKN-b 1P+N B1A	06120417R0	60	
2A	BKN-b 1P+N B2A	06120418R0	60	
3A	BKN-b 1P+N B3A	06120419R0	60	
4A	BKN-b 1P+N B4A	06120420R0	60	
6A	BKN-b 1P+N B6A	06120421R0	60	
10A	BKN-b 1P+N B10A	06120422R0	60	
16A	BKN-b 1P+N B16A	06120423R0	60	
20A	BKN-b 1P+N B20A	06120424R0	60	
25A	BKN-b 1P+N B25A	06120425R0	60	
32A	BKN-b 1P+N B32A	06120426R0	60	
40A	BKN-b 1P+N B40A	06120427R0	60	
50A	BKN-b 1P+N B50A	06120428R0	60	
63A	BKN-b 1P+N B63A	06120429R0	60	

BKN-b 2P

10kA at 400VAC

In	Model	Catalog No.	Pack. unit (Pcs.)	PRICE
1A	BKN-b 2P B1A	06120430R0	60	
2A	BKN-b 2P B2A	06120431R0	60	
3A	BKN-b 2P B3A	06120432R0	60	
4A	BKN-b 2P B4A	06120433R0	60	
6A	BKN-b 2P B6A	06120434R0	60	
10A	BKN-b 2P B10A	06120435R0	60	
16A	BKN-b 2P B16A	06120436R0	60	
20A	BKN-b 2P B20A	06120437R0	60	
25A	BKN-b 2P B25A	06120438R0	60	
32A	BKN-b 2P B32A	06120439R0	60	
40A	BKN-b 2P B40A	06120440R0	60	
50A	BKN-b 2P B50A	06120441R0	60	
63A	BKN-b 2P B63A	06120442R0	60	

BKN-b type, B curve

Catalog No.

BKN-b 3P

10kA at 400VAC

In	Model	Catalog No.	Pack. unit (Pcs.)	PRICE
1A	BKN-b 3P B1A	06120443R0	40	
2A	BKN-b 3P B2A	06120444R0	40	
3A	BKN-b 3P B3A	06120445R0	40	
4A	BKN-b 3P B4A	06120446R0	40	
6A	BKN-b 3P B6A	06120447R0	40	
10A	BKN-b 3P B10A	06120448R0	40	
16A	BKN-b 3P B16A	06120449R0	40	
20A	BKN-b 3P B20A	06120450R0	40	
25A	BKN-b 3P B25A	06120451R0	40	
32A	BKN-b 3P B32A	06120452R0	40	
40A	BKN-b 3P B40A	06120453R0	40	
50A	BKN-b 3P B50A	06120454R0	40	
63A	BKN-b 3P B63A	06120455R0	40	

BKN-b 3P+N

10kA at 400VAC

In	Model	Catalog No.	Pack. unit (Pcs.)	PRICE
1A	BKN-b 3P+N B1A	06120456R0	30	
2A	BKN-b 3P+N B2A	06120457R0	30	
3A	BKN-b 3P+N B3A	06120458R0	30	
4A	BKN-b 3P+N B4A	06120459R0	30	
6A	BKN-b 3P+N B6A	06120460R0	30	
10A	BKN-b 3P+N B10A	06120461R0	30	
16A	BKN-b 3P+N B16A	06120462R0	30	
20A	BKN-b 3P+N B20A	06120463R0	30	
25A	BKN-b 3P+N B25A	06120464R0	30	
32A	BKN-b 3P+N B32A	06120465R0	30	
40A	BKN-b 3P+N B40A	06120466R0	30	
50A	BKN-b 3P+N B50A	06120467R0	30	
63A	BKN-b 3P+N B63A	06120468R0	30	

BKN-b 4P

10kA at 400VAC

In	Model	Catalog No.	Pack. unit (Pcs.)	PRICE
1A	BKN-b 4P B1A	06120469R0	30	
2A	BKN-b 4P B2A	06120470R0	30	
3A	BKN-b 4P B3A	06120471R0	30	
4A	BKN-b 4P B4A	06120472R0	30	
6A	BKN-b 4P B6A	06120473R0	30	
10A	BKN-b 4P B10A	06120474R0	30	
16A	BKN-b 4P B16A	06120475R0	30	
20A	BKN-b 4P B20A	06120476R0	30	
25A	BKN-b 4P B25A	06120477R0	30	
32A	BKN-b 4P B32A	06120478R0	30	
40A	BKN-b 4P B40A	06120479R0	30	
50A	BKN-b 4P B50A	06120480R0	30	
63A	BKN-b 4P B63A	06120481R0	30	

BKN-b type, C curve

Catalog No.

BKN-b 1P

10kA at 230/400VAC

In	Model	Catalog No.	Pack. unit (Pcs.)	PRICE
1A	BKN-b 1P C1A	06110173R0	120	
2A	BKN-b 1P C2A	06110174R0	120	
3A	BKN-b 1P C3A	06110175R0	120	
4A	BKN-b 1P C4A	06110176R0	120	
6A	BKN-b 1P C6A	06110177R0	120	
10A	BKN-b 1P C10A	06110178R0	120	
16A	BKN-b 1P C16A	06110179R0	120	
20A	BKN-b 1P C20A	06110180R0	120	
25A	BKN-b 1P C25A	06110181R0	120	
32A	BKN-b 1P C32A	06110182R0	120	
40A	BKN-b 1P C40A	06110183R0	120	
50A	BKN-b 1P C50A	06110184R0	120	
63A	BKN-b 1P C63A	06110185R0	120	

BKN-b 1P+N

10kA at 230/400VAC

In	Model	Catalog No.	Pack. unit (Pcs.)	PRICE
1A	BKN-b 1P+N C1A	06110186R0	60	
2A	BKN-b 1P+N C2A	06110187R0	60	
3A	BKN-b 1P+N C3A	06110188R0	60	
4A	BKN-b 1P+N C4A	06110189R0	60	
6A	BKN-b 1P+N C6A	06110190R0	60	
10A	BKN-b 1P+N C10A	06110191R0	60	
16A	BKN-b 1P+N C16A	06110192R0	60	
20A	BKN-b 1P+N C20A	06110193R0	60	
25A	BKN-b 1P+N C25A	06110194R0	60	
32A	BKN-b 1P+N C32A	06110195R0	60	
40A	BKN-b 1P+N C40A	06110196R0	60	
50A	BKN-b 1P+N C50A	06110197R0	60	
63A	BKN-b 1P+N C63A	06110198R0	60	

BKN-b 2P

10kA at 400VAC

In	Model	Catalog No.	Pack. unit (Pcs.)	PRICE
1A	BKN-b 2P C1A	06110199R0	60	
2A	BKN-b 2P C2A	06110200R0	60	
3A	BKN-b 2P C3A	06110201R0	60	
4A	BKN-b 2P C4A	06110202R0	60	
6A	BKN-b 2P C6A	06110203R0	60	
10A	BKN-b 2P C10A	06110204R0	60	
16A	BKN-b 2P C16A	06110205R0	60	
20A	BKN-b 2P C20A	06110206R0	60	
25A	BKN-b 2P C25A	06110207R0	60	
32A	BKN-b 2P C32A	06110208R0	60	
40A	BKN-b 2P C40A	06110209R0	60	
50A	BKN-b 2P C50A	06110210R0	60	
63A	BKN-b 2P C63A	06110211R0	60	

BKN-b type, C curve

BKN-b 3P

Catalog No.

10kA at 400VAC

In	Model	Catalog No.	Pack. unit (Pcs.)	PRICE
1A	BKN-b 3P C1A	06110212R0	40	
2A	BKN-b 3P C2A	06110213R0	40	
3A	BKN-b 3P C3A	06110214R0	40	
4A	BKN-b 3P C4A	06110215R0	40	
6A	BKN-b 3P C6A	06110216R0	40	
10A	BKN-b 3P C10A	06110217R0	40	
16A	BKN-b 3P C16A	06110218R0	40	
20A	BKN-b 3P C20A	06110219R0	40	
25A	BKN-b 3P C25A	06110220R0	40	
32A	BKN-b 3P C32A	06110221R0	40	
40A	BKN-b 3P C40A	06110222R0	40	
50A	BKN-b 3P C50A	06110223R0	40	
63A	BKN-b 3P C63A	06110224R0	40	

BKN-b 3P+N

10kA at 400VAC

In	Model	Catalog No.	Pack. unit (Pcs.)	PRICE
1A	BKN-b 3P+N C1A	06110225R0	30	
2A	BKN-b 3P+N C2A	06110226R0	30	
3A	BKN-b 3P+N C3A	06110227R0	30	
4A	BKN-b 3P+N C4A	06110228R0	30	
6A	BKN-b 3P+N C6A	06110229R0	30	
10A	BKN-b 3P+N C10A	06110230R0	30	
16A	BKN-b 3P+N C16A	06110231R0	30	
20A	BKN-b 3P+N C20A	06110232R0	30	
25A	BKN-b 3P+N C25A	06110233R0	30	
32A	BKN-b 3P+N C32A	06110234R0	30	
40A	BKN-b 3P+N C40A	06110235R0	30	
50A	BKN-b 3P+N C50A	06110236R0	30	
63A	BKN-b 3P+N C63A	06110237R0	30	

BKN-b 4P

10kA at 400VAC

In	Model	Catalog No.	Pack. unit (Pcs.)	PRICE
1A	BKN-b 4P C1A	06110238R0	30	
2A	BKN-b 4P C2A	06110239R0	30	
3A	BKN-b 4P C3A	06110240R0	30	
4A	BKN-b 4P C4A	06110241R0	30	
6A	BKN-b 4P C6A	06110242R0	30	
10A	BKN-b 4P C10A	06110243R0	30	
16A	BKN-b 4P C16A	06110244R0	30	
20A	BKN-b 4P C20A	06110245R0	30	
25A	BKN-b 4P C25A	06110246R0	30	
32A	BKN-b 4P C32A	06110247R0	30	
40A	BKN-b 4P C40A	06110248R0	30	
50A	BKN-b 4P C50A	06110249R0	30	
63A	BKN-b 4P C63A	06110250R0	30	

BKN-b type, D curve

Catalog No.

BKN-b 1P

10kA at 230/400VAC

In	Model	Catalog No.	Pack. unit (Pcs.)	PRICE
1A	BKN-b 1P D1A	06110251R0	120	
2A	BKN-b 1P D2A	06110252R0	120	
3A	BKN-b 1P D3A	06110253R0	120	
4A	BKN-b 1P D4A	06110254R0	120	
6A	BKN-b 1P D6A	06110255R0	120	
10A	BKN-b 1P D10A	06110256R0	120	
16A	BKN-b 1P D16A	06110257R0	120	
20A	BKN-b 1P D20A	06110258R0	120	
25A	BKN-b 1P D25A	06110259R0	120	
32A	BKN-b 1P D32A	06110260R0	120	
40A	BKN-b 1P D40A	06110261R0	120	
50A	BKN-b 1P D50A	06110262R0	120	
63A	BKN-b 1P D63A	06110263R0	120	

BKN-b 1P+N

10kA at 230/400VAC

In	Model	Catalog No.	Pack. unit (Pcs.)	PRICE
1A	BKN-b 1P+N D1A	06110264R0	60	
2A	BKN-b 1P+N D2A	06110265R0	60	
3A	BKN-b 1P+N D3A	06110266R0	60	
4A	BKN-b 1P+N D4A	06110267R0	60	
6A	BKN-b 1P+N D6A	06110268R0	60	
10A	BKN-b 1P+N D10A	06110269R0	60	
16A	BKN-b 1P+N D16A	06110270R0	60	
20A	BKN-b 1P+N D20A	06110271R0	60	
25A	BKN-b 1P+N D25A	06110272R0	60	
32A	BKN-b 1P+N D32A	06110273R0	60	
40A	BKN-b 1P+N D40A	06110274R0	60	
50A	BKN-b 1P+N D50A	06110275R0	60	
63A	BKN-b 1P+N D63A	06110276R0	60	

BKN-b 2P

10kA at 400VAC

In	Model	Catalog No.	Pack. unit (Pcs.)	PRICE
1A	BKN-b 2P D1A	06110277R0	60	
2A	BKN-b 2P D2A	06110278R0	60	
3A	BKN-b 2P D3A	06110279R0	60	
4A	BKN-b 2P D4A	06110280R0	60	
6A	BKN-b 2P D6A	06110281R0	60	
10A	BKN-b 2P D10A	06110282R0	60	
16A	BKN-b 2P D16A	06110283R0	60	
20A	BKN-b 2P D20A	06110284R0	60	
25A	BKN-b 2P D25A	06110285R0	60	
32A	BKN-b 2P D32A	06110286R0	60	
40A	BKN-b 2P D40A	06110287R0	60	
50A	BKN-b 2P D50A	06110288R0	60	
63A	BKN-b 2P D63A	06110289R0	60	

BKN-b type, D curve

Catalog No.

BKN-b 3P

10kA at 400VAC

In	Model	Catalog No.	Pack. unit (Pcs.)	PRICE
1A	BKN-b 3P D1A	06110290R0	40	
2A	BKN-b 3P D2A	06110291R0	40	
3A	BKN-b 3P D3A	06110292R0	40	
4A	BKN-b 3P D4A	06110293R0	40	
6A	BKN-b 3P D6A	06110294R0	40	
10A	BKN-b 3P D10A	06110295R0	40	
16A	BKN-b 3P D16A	06110296R0	40	
20A	BKN-b 3P D20A	06110297R0	40	
25A	BKN-b 3P D25A	06110298R0	40	
32A	BKN-b 3P D32A	06110299R0	40	
40A	BKN-b 3P D40A	06110300R0	40	
50A	BKN-b 3P D50A	06110301R0	40	
63A	BKN-b 3P D63A	06110302R0	40	

BKN-b 3P+N

10kA at 400VAC

In	Model	Catalog No.	Pack. unit (Pcs.)	PRICE
1A	BKN-b 3P+N D1A	06110303R0	30	
2A	BKN-b 3P+N D2A	06110304R0	30	
3A	BKN-b 3P+N D3A	06110305R0	30	
4A	BKN-b 3P+N D4A	06110306R0	30	
6A	BKN-b 3P+N D6A	06110307R0	30	
10A	BKN-b 3P+N D10A	06110308R0	30	
16A	BKN-b 3P+N D16A	06110309R0	30	
20A	BKN-b 3P+N D20A	06110310R0	30	
25A	BKN-b 3P+N D25A	06110311R0	30	
32A	BKN-b 3P+N D32A	06110312R0	30	
40A	BKN-b 3P+N D40A	06110313R0	30	
50A	BKN-b 3P+N D50A	06110314R0	30	
63A	BKN-b 3P+N D63A	06110315R0	30	

BKN-b 4P

10kA at 400VAC

In	Model	Catalog No.	Pack. unit (Pcs.)	PRICE
1A	BKN-b 4P D1A	06110316R0	30	
2A	BKN-b 4P D2A	06110317R0	30	
3A	BKN-b 4P D3A	06110318R0	30	
4A	BKN-b 4P D4A	06110319R0	30	
6A	BKN-b 4P D6A	06110320R0	30	
10A	BKN-b 4P D10A	06110321R0	30	
16A	BKN-b 4P D16A	06110322R0	30	
20A	BKN-b 4P D20A	06110323R0	30	
25A	BKN-b 4P D25A	06110324R0	30	
32A	BKN-b 4P D32A	06110325R0	30	
40A	BKN-b 4P D40A	06110326R0	30	
50A	BKN-b 4P D50A	06110327R0	30	
63A	BKN-b 4P D63A	06110328R0	30	

High rupturing capacity

BKH type

BKH 1P

Technical data

Standard	Confirming to IEC60947-2
Approval	CCC, CQC CB†
Protection	Overload and short circuit
Rated current In	63, 80, 100, 125A
Rated voltage	1pole 230/400VAC 50/60Hz 2, 3, 4pole 400VAC 50/60Hz
Breaking capacity	10kA
Characteristic	C, D curve
Number of poles	1P, 2P, 3P, 3P+N, 4P
Type of trip	Thermal magnetic release
Type of terminal	Lug type
Terminal capacity	Cables up to 50mm^2
Installation	Mounting on 35mm DIN rail
Width	27mm per pole
Electrical endurance	6000 cycles

Catalog No.

C curve

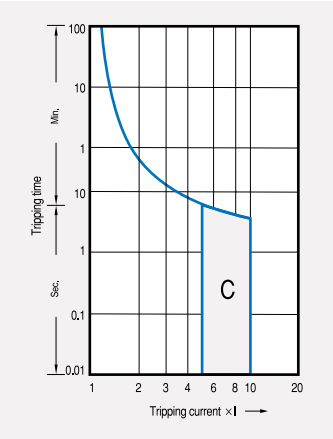

Type	In	Model	Catalog No.	Pack. unit (Pcs.)	PRICE
1P	63A	BKH -C-63-1	06110329R0	72	
	80A	BKH -C-80-1	06110330R0	72	
	100A	BKH -C-100-1	06110331R0	72	
	125A	BKH -C-125-1	06110332R0	72	
2P	63A	BKH -C-63-2	06110337R0	36	
	80A	BKH -C-80-2	06110338R0	36	
	100A	BKH -C-100-2	06110339R0	36	
	125A	BKH -C-125-2	06110340R0	36	
3P	63A	BKH -C-63-3	06110345R0	24	
	80A	BKH -C-80-3	06110346R0	24	
	100A	BKH -C-100-3	06110347R0	24	
	125A	BKH -C-125-3	06110348R0	24	
3P+N	63A	BKH -C-63-3+N	06110353R0	18	
	80A	BKH -C-80-3+N	06110354R0	18	
	100A	BKH -C-100-3+N	06110355R0	18	
	125A	BKH -C-125-3+N	06110356R0	18	
4P	63A	BKH -C-63-4	06110361R0	18	
	80A	BKH -C-80-4	06110362R0	18	
	100A	BKH -C-100-4	06110363R0	18	
	125A	BKH -C-125-4	06110364R0	18	

D curve

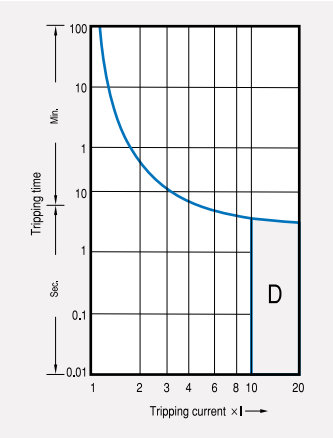

Type	In	Model	Catalog No.	Pack. unit (Pcs.)	PRICE
1P	63A	BKH -D-63-1	06110333R0	72	
	80A	BKH -D-80-1	06110334R0	72	
	100A	BKH -D-100-1	06110335R0	72	
	125A	BKH -D-125-1	06110336R0	72	
2P	63A	BKH -D-63-2	06110341R0	36	
	80A	BKH -D-80-2	06110342R0	36	
	100A	BKH -D-100-2	06110343R0	36	
	125A	BKH -D-125-2	06110344R0	36	
3P	63A	BKH -D-63-3	06110349R0	24	
	80A	BKH -D-80-3	06110350R0	24	
	100A	BKH -D-100-3	06110351R0	24	
	125A	BKH -D-125-3	06110352R0	24	
3P+N	63A	BKH -D-63-3+N	06110357R0	18	
	80A	BKH -D-80-3+N	06110358R0	18	
	100A	BKH -D-100-3+N	06110359R0	18	
	125A	BKH -D-125-3+N	06110360R0	18	
4P	63A	BKH -D-63-4	06110365R0	18	
	80A	BKH -D-80-4	06110366R0	18	
	100A	BKH -D-100-4	06110367R0	18	
	125A	BKH -D-125-4	06110368R0	18	

Miniature circuit breakers

Residual current circuit breakers, RKP & KGR type

RKP 1P+N

Certificate
CE

Technical data

Type	RKP	32KGRa	32KGRb
Protection	Ground fault and overcurrent	Ground fault and overcurrent	
Rated current, In	3(C, D) 6, 10, 16, 20, 25, 32A (B, C, D curve)	15, 20, 30A	
Rated residual current			
Operating, $I_{\Delta n}$	30, 100, 300mA (non-adjustable)	15, 30mA (non-adjustable)	
Non-operating, $I_{\Delta no}$	$0.5I_{\Delta n}$	$0.5I_{\Delta n}$	
Number of poles	1P+N	2pole	
Rated voltage	230VAC	110/220VAC	
Residual current off-time	≤ 0.1 sec.	≤ 0.03 sec.	
Standard	IEC 61009	KS, JIS (IEC 61009)*	
Approval	CCC, CQC CB		
Type of trip			
Ground fault	Electro-magnetic	Electronic	
Overcurrent	Thermal-magnetic	Bimetallic	
Breaking capacity	4.5kA	1.5kA	2.5kA
Electrical endurance	20000 operations	6000 operations	
Mount	On 35mm DIN rail	On 35mm DIN rail	
Width	9mm per pole	35mm	
Terminal	Lug type (cable up to 10mm²)	Screw clamp type (cable up to 25mm²)	

Note) *IEC 61009 standard is applicable for 32KGRa

Catalog No.

RKP B curve

In	$I_{\Delta n}$	Model	Catalog No.	Pack. unit (Pcs.)
3A	30mA	Not applicable	Not applicable	Not applicable
	100mA	Not applicable	Not applicable	Not applicable
	300mA	Not applicable	Not applicable	Not applicable
6A	30mA	RKP-B6-1+N/30mA	06220123R0	60
	100mA	RKP-B6-1+N/100mA	06220124R0	60
	300mA	RKP-B6-1+N/300mA	06220125R0	60
10A	30mA	RKP-B10-1+N/30mA	06220127R0	60
	100mA	RKP-B10-1+N/100mA	06220128R0	60
	300mA	RKP-B10-1+N/300mA	06220129R0	60
16A	30mA	RKP-B16-1+N/30mA	06220131R0	60
	100mA	RKP-B16-1+N/100mA	06220132R0	60
	300mA	RKP-B16-1+N/300mA	06220133R0	60
20A	30mA	RKP-B20-1+N/30mA	06220135R0	60
	100mA	RKP-B20-1+N/100mA	06220136R0	60
	300mA	RKP-B20-1+N/300mA	06220137R0	60
25A	30mA	RKP-B25-1+N/30mA	06220139R0	60
	100mA	RKP-B25-1+N/100mA	06220140R0	60
	300mA	RKP-B25-1+N/300mA	06220141R0	60
32A	30mA	RKP-B32-1+N/30mA	06220143R0	60
	100mA	RKP-B32-1+N/100mA	06220144R0	60
	300mA	RKP-B32-1+N/300mA	06220145R0	60

RKP C curve

In	$I_{\Delta n}$	Model	Catalog No.	Pack. unit (Pcs.)
3A	30mA	RKP-C3-1+N/30mA	06220147R0	60
	100mA	RKP-C3-1+N/100mA	06220148R0	60
	300mA	RKP-C3-1+N/300mA	06220149R0	60
6A	30mA	RKP-C6-1+N/30mA	06220151R0	60
	100mA	RKP-C6-1+N/100mA	06220152R0	60
	300mA	RKP-C6-1+N/300mA	06220153R0	60
10A	30mA	RKP-C10-1+N/30mA	06220155R0	60
	100mA	RKP-C10-1+N/100mA	06220156R0	60
	300mA	RKP-C10-1+N/300mA	06220157R0	60
16A	30mA	RKP-C16-1+N/30mA	06220159R0	60
	100mA	RKP-C16-1+N/100mA	06220160R0	60
	300mA	RKP-C16-1+N/300mA	06220161R0	60
20A	30mA	RKP-C20-1+N/30mA	06220163R0	60
	100mA	RKP-C20-1+N/100mA	06220164R0	60
	300mA	RKP-C20-1+N/300mA	06220165R0	60
25A	30mA	RKP-C25-1+N/30mA	06220167R0	60
	100mA	RKP-C25-1+N/100mA	06220168R0	60
	300mA	RKP-C25-1+N/300mA	06220169R0	60
32A	30mA	RKP-C32-1+N/30mA	06220171R0	60
	100mA	RKP-C32-1+N/100mA	06220172R0	60
	300mA	RKP-C32-1+N/300mA	06220173R0	60

RKP 1P+N

Certificate
CE

Catalog No.

RKP D curve

In	$I_{\Delta n}$	Model	Catalog No.	Pack. unit (Pcs.)
3A	30mA	RKP-D3-1+N/30mA	06220175R0	60
	100mA	RKP-D3-1+N/100mA	06220176R0	60
	300mA	RKP-D3-1+N/300mA	06220177R0	60
6A	30mA	RKP-D6-1+N/30mA	06220179R0	60
	100mA	RKP-D6-1+N/100mA	06220180R0	60
	300mA	RKP-D6-1+N/300mA	06220181R0	60
10A	30mA	RKP-D10-1+N/30mA	06220183R0	60
	100mA	RKP-D10-1+N/100mA	06220184R0	60
	300mA	RKP-D10-1+N/300mA	06220185R0	60
16A	30mA	RKP-D16-1+N/30mA	06220187R0	60
	100mA	RKP-D16-1+N/100mA	06220188R0	60
	300mA	RKP-D16-1+N/300mA	06220189R0	60
20A	30mA	RKP-D20-1+N/30mA	06220191R0	60
	100mA	RKP-D20-1+N/100mA	06220192R0	60
	300mA	RKP-D20-1+N/300mA	06220193R0	60
25A	30mA	RKP-D25-1+N/30mA	06220195R0	60
	100mA	RKP-D25-1+N/100mA	06220196R0	60
	300mA	RKP-D25-1+N/300mA	06220197R0	60
32A	30mA	RKP-D32-1+N/30mA	06220199R0	60
	100mA	RKP-D32-1+N/100mA	06220200R0	60
	300mA	RKP-D32-1+N/300mA	06220201R0	60

32KGRb

Certificate
CE

32KGRa Type

In	$I_{\Delta n}$	Model	Catalog No.	Pack. unit (Pcs.)
15A	15mA	32KGRa 15A 15mA 0.03S	0750000400	60
	30mA	32KGRa 15A 30mA 0.03S	0750000100	60
20A	15mA	32KGRa 20A 15mA 0.03S	0750000500	60
	30mA	32KGRa 20A 30mA 0.03S	0750000200	60
30A	15mA	32KGRa 30A 15mA 0.03S	0750000600	60
	30mA	32KGRa 30A 30mA 0.03S	0750000300	60

32KGRb Type

In	$I_{\Delta n}$	Model	Catalog No.	Pack. unit (Pcs.)
15A	15mA	32KGRb 15A 15mA 0.03S	0748001000	60
	30mA	32KGRb 15A 30mA 0.03S	0748001100	60
20A	15mA	32KGRb 20A 15mA 0.03S	0748001200	60
	30mA	32KGRb 20A 30mA 0.03S	0748001300	60
30A	15mA	32KGRb 30A 15mA 0.03S	0748001400	60
	30mA	32KGRb 30A 30mA 0.03S	0748001500	60

Residual current circuit breakers, RKS

RKS 1+N

Certificate
CE

Technical data

Standard	Confirming to IEC 61009
Protection	Ground fault and overcurrent
Rated current In	6, 10, 16, 20, 25, 32A
Rated voltage	230VAC
Breaking capacity	10kA
Characteristic	B, C Curve
Rated residual operating current(mA)	30,100
Number of poles	1P+N
Type of trip	Electro-magnetic (Ground fault) Thermal-magnetic (Overcurrent)
Type of terminal	Lug type
Terminal capacity	Cables up to 10mm^2
Installation	35mm DIN rail
Width	18mm
Electrical endurance	4,000cycles
In	
Endurance	
Max. frequency (Cycles/hour)	

Catalog No.

RKS B Curve

In	$I_{\Delta n}$	Model	Catalog No.	Pack. unit (Pcs.)
6A	30mA	RKS -B6-1+N/30mA	06220395R0	50
	100mA	RKS -B6-1+N/100mA	06220396R0	50
10A	30mA	RKS -B10-1+N/30mA	06220397R0	50
	100mA	RKS -B10-1+N/100mA	06220398R0	50
16A	30mA	RKS -B16-1+N/30mA	06220399R0	50
	100mA	RKS -B16-1+N/100mA	06220400R0	50
20A	30mA	RKS -B20-1+N/30mA	06220401R0	50
	100mA	RKS -B20-1+N/100mA	06220402R0	50
25A	30mA	RKS -B25-1+N/30mA	06220403R0	50
	100mA	RKS -B25-1+N/100mA	06220404R0	50
32A	30mA	RKS -B32-1+N/30mA	06220405R0	50
	100mA	RKS -B32-1+N/100mA	06220406R0	50

RKS C Curve

In	$I_{\Delta n}$	Model	Catalog No.	Pack. unit (Pcs.)
6A	30mA	RKS -C6-1+N/30mA	06220407R0	50
	100mA	RKS -C6-1+N/100mA	06220408R0	50
10A	30mA	RKS -C10-1+N/30mA	06220409R0	50
	100mA	RKS -C10-1+N/100mA	06220410R0	50
16A	30mA	RKS -C16-1+N/30mA	06220411R0	50
	100mA	RKS -C16-1+N/100mA	06220412R0	50
20A	30mA	RKS -C20-1+N/30mA	06220413R0	50
	100mA	RKS -C20-1+N/100mA	06220414R0	50
25A	30mA	RKS -C25-1+N/30mA	06220415R0	50
	100mA	RKS -C25-1+N/100mA	06220416R0	50
32A	30mA	RKS -C32-1+N/30mA	06220417R0	50
	100mA	RKS -C32-1+N/100mA	06220418R0	50

Residual current circuit breakers, RKN type

Certificate
CE

Technical data

Type		**RKN**
Standard		Confirming to IEC61008
Protection		Ground fault
Rated current, In		25. 32, 40, 63A
Number of poles		2(1+N), 4(3+N)pole
Rated sensitivity currents, $I_{\Delta n}$		30, 100, 300mA
Rated residual non-operating current		$0.5 \times I_{\Delta n}$
Rated voltages	**2pole**	240VAC
	4pole	240/415VAC
Residual current off-time at $I_{\Delta n}$		$\leq$ 0.1s
Rated making capacity, Im		500A for In=25, 32, 40A 630A for In=63A
Rated conditional short-circuit current, Inc		6kA for In=25, 32, 40, 63A
Type of trip		Electro-magnetic release
Type of terminal		Lug type
Terminal capacity		Cables up to 35mm^2
Installation		35mm DIN rail
Slot size		45mm

Catalog No.

Pole	In	$I_{\Delta n}$	Model	Catalog No.	Pack.unit (Pcs.)
2P	25A	30mA	RKN -25-2/30mA	06220103R0	60
	32A		RKN -32-2/30mA	06220106R0	60
	40A		RKN -40-2/30mA	06220109R0	60
	63A		RKN -63-2/30mA	06220112R0	60
	25A	100mA	RKN -25-2/100mA	06220104R0	60
	32A		RKN -32-2/100mA	06220107R0	60
	40A		RKN -40-2/100mA	06220110R0	60
	63A		RKN -63-2/100mA	06220113R0	60
	25A	300mA	RKN -25-2/300mA	06220105R0	60
	32A		RKN -32-2/300mA	06220108R0	60
	40A		RKN -40-2/300mA	06220111R0	60
	63A		RKN -63-2/300mA	06220114R0	60

Pole	In	$I_{\Delta n}$	Model	Catalog No.	Pack.unit (Pcs.)
4P	25A	30mA	RKN -25-4/30mA	06240013R0	30
	32A		RKN -32-4/30mA	06240016R0	30
	40A		RKN -40-4/30mA	06240019R0	30
	63A		RKN -63-4/30mA	06240022R0	30
	25A	100mA	RKN -25-4/100mA	06240014R0	30
	32A		RKN -32-4/100mA	06240017R0	30
	40A		RKN -40-4/100mA	06240020R0	30
	63A		RKN -63-4/100mA	06240023R0	30
	25A	300mA	RKN -25-4/300mA	06240015R0	30
	32A		RKN -32-4/300mA	06240018R0	30
	40A		RKN -40-4/300mA	06240021R0	30
	63A		RKN -63-4/300mA	06240024R0	30

Isolator, BKD type

Certificate
CE

Technical data

Number of poles	1, 2, 3, 4pole	
Standard	IEC60947-3	
Rated currents	40, 50, 63, 80, 100, 125A	
Rated voltages	240/415VAC	
Electrical endurance	63A	20000 cycles
	80, 100, 125A	10000 cycles
Type of terminal	Tunnel type	
Terminal capacity	Cables up to 50mm^2	
Installation	Mounting on 35mm DIN rail	
Width	17.5mm per pole	

Catalog No.

Pole	In	Model	Catalog No.	Pack. unit (Pcs.)
1P	40A	BKD-40-1	06110112R0	120
	50A	BKD-50-1	06110113R0	120
	63A	BKD-63-1	06110083R0	120
	80A	BKD-80-1	06110084R0	120
	100A	BKD-100-1	06110085R0	120
	125A	BKD-125-1	06110114R0	120

Pole	In	Model	Catalog No.	Pack. unit (Pcs.)
2P	40A	BKD-40-2	06120304R0	60
	50A	BKD-50-2	06120305R0	60
	63A	BKD-63-2	06120247R0	60
	80A	BKD-80-2	06120248R0	60
	100A	BKD-100-2	06120249R0	60
	125A	BKD-125-2	06120306R0	60

Pole	In	Model	Catalog No.	Pack. unit (Pcs.)
3P	40A	BKD-40-3	06130092R0	40
	50A	BKD-50-3	06130093R0	40
	63A	BKD-63-3	06130063R0	40
	80A	BKD-80-3	06130064R0	40
	100A	BKD-100-3	06130065R0	40
	125A	BKD-125-3	06130094R0	40

Pole	In	Model	Catalog No.	Pack. unit (Pcs.)
4P	40A	BKD-40-4	06140185R0	30
	50A	BKD-50-4	06140186R0	30
	63A	BKD-63-4	06140130R0	30
	80A	BKD-80-4	06140131R0	30
	100A	BKD-100-4	06140132R0	30
	125A	BKD-125-4	06140187R0	30

Residential breakers

60mm depth twin breakers, ABS-Fb & EBS-Fb type

30AF / 2pole

MCCB

ELCB

50AF / 3pole

MCCB

ELCB

Technical data

		MCCB			RCCB		
Type		**ABS-Fb**			**EBS-Fb**		
Protection		overload short circuit			overload short circuit ground fault		
Rated current In		3 ... 30A	5 ... 50A	60 ... 100A	3 ... 30A	5 ... 50A	60 ... 100A
Rated voltage		AC 460V			AC 100~220V		
Rated residual current, $I_{\Delta n}$		Not applicable			30mA	30mA	30, 100mA
Breaking capacity, Icu	**AC 460V**	2.5kA	2.5kA	5kA	-	-	-
	AC 380V	2.5kA	2.5kA	5kA	2.5kA	2.5kA	5kA
	AC 220V	5kA	5kA	10kA	5kA	5kA	10kA
	AC 100/110V	5kA	5kA	10kA	5kA	5kA	10kA
Residual non-operating current		Not applicable			0.5 x $I_{\Delta n}$		
Residual current off-time at $I_{\Delta n}$		Not applicable			≤0.03 sec to $I_{\Delta n}$=30mA ≤0.1 sec to $I_{\Delta n}$=100mA		
Type of trip unit		Hydraulic-magnetic			Hydraulic-magnetic for overcurrent pick-up Electronic for earth leakage pick-up		
Number of poles		2, 3pole					
Connection		Front					
Mounting		Bolt on or DIN rail					
Type of terminal		Clamp					

Description

- Offering MCCBs and RCCBs in the same physical and ampere frame size.
- Trip unit with a fixed thermal and fixed magnetic trip.
- All operating mechanisms are of the quick-make, quick-break type and are "trip free"
- Two and three-pole breakers shall have common tripping of allpoles.
- Operating handle is "Trip to Off".
- Face plate shall indicate rated ampacity.
- Thermal elements shall be factory cablirated to operate in a 40˚C ambient environment.
- Offering the same slot and depth sizes with the GB type MCCBs
  - 60mm depth
  - 50mm slot

100AF / 3pole

ABS103Fb

Catalog No.

30AF

	MCCB		RCCB	
			with $I_{\triangle n}$=30mA	
In	**2pole**	**3pole**	**2pole**	**3pole**
3A	ABS32Fb3	ABS33Fb3	EBS32Fb3	EBS33Fb3
5A	ABS32Fb5	ABS33Fb5	EBS32Fb5	EBS33Fb5
10A	ABS32Fb10	ABS33Fb10	EBS32Fb10	EBS33Fb10
15A	ABS32Fb15	ABS33Fb15	EBS32Fb15	EBS33Fb15
20A	ABS32Fb20	ABS33Fb20	EBS32Fb20	EBS33Fb20
30A	ABS32Fb30	ABS33Fb30	EBS32Fb30	EBS33Fb30
Weight	0.3kg	0.42kg	0.4kg	0.5kg

50AF

			with $I_{\triangle n}$=30mA	
In	**2pole**	**3pole**	**2pole**	**3pole**
5A	ABS52Fb5	ABS53Fb5	EBS52Fb5	EBS53Fb5
10A	ABS52Fb10	ABS53Fb10	EBS52Fb10	EBS53Fb10
15A	ABS52Fb15	ABS52Fb15	EBS52Fb15	EBS53Fb15
20A	ABS52Fb20	ABS52Fb20	EBS52Fb20	EBS53Fb20
30A	ABS52Fb30	ABS52Fb30	EBS52Fb30	EBS53Fb30
40A	ABS52Fb40	ABS52Fb40	EBS52Fb40	EBS53Fb40
50A	ABS52Fb50	ABS52Fb50	EBS52Fb50	EBS53Fb50
Weight	0.3kg	0.42kg	0.4kg	0.5kg

100AF

			with $I_{\triangle n}$=30mA	
In	**2pole**	**3pole**	**2pole**	**3pole**
60A	ABS102Fb60	ABS103Fb60	EBS102Fb60	EBS103Fb60
75A	ABS102Fb75	ABS103Fb75	EBS102Fb75	EBS103Fb75
100A	ABS102Fb100	ABS103Fb100	EBS102Fb100	EBS103Fb100
Weight	0.47kg	0.5kg	0.5kg	0.6kg

	with $I_{\triangle n}$=100mA	
In	**2pole**	**3pole**
60A	EBS102Fb60	EBS103Fb60
75A	EBS102Fb75	EBS103Fb75
100A	EBS102Fb100	EBS103Fb100
Weight	0.5kg	0.6kg

Residential breakers

60mm depth miniature circuit breakers, BF type

BF-a, BF-c

Description

- Trip unit with a fixed thermal and fixed magnetic trip
- All operating mechanisms are of the quick-make, quick-break type and are "trip free"
- Two and three-pole breakers shall have common tripping of allpoles.
- Operating handle is "Trip to Off"
- Operating hand and face plate shall indicate rated ampacity.
- Thermal elements shall be calibrated to operate in a 40℃ ambient environment in standard.
- Electrical durability: 10, 000 operations at In
- Reference temperature: 40℃
- Connection by clamp terminal
- Offering the same slot and depth size with the GB type MCCBs.
  - 60mm depth
  - 50mm slot

BF

Technical data

Type		BF-a	BF-c	BF
Rated current		10~100A	10~100A	6~50A
Breaking capacity, Icu	240V	10kA	5kA	2.5kA
	415V	2.5kA (2, 3pole)	2.5kA (2, 3pole)	Not applicable
Rated insulation voltage		460VAC		240VAC
Number of poles		1, 2, 3pole		1, 2pole
Standard		IEC 60947-2		
Protection		Overload and short circuit		
Characteristic		See operating curves (p. 44)		
Type of trip		Thermal magnetic release		
Type of terminal		Clamp type		
Installation		Holder mounting (Bolt on with fixing brackets)		
Width		25mm per pole		
Slot		50mm		
Accessory		Not available		

Catalog No.

BF-a 1P

BF-a — 10kA at 240VAC / 2.5kA at 415VAC

1Pole					2Poles				3Pole			
In	Model	Catalog No.	Pack. unit (Pcs.)	PRICE	Model	Catalog No.	Pack. unit (Pcs.)	PRICE	Model	Catalog No.	Pack. unit (Pcs.)	PRICE
10A	BF51a 10A	0607005100	60		BF52a 10A	0607006500	30		BF53a 10A	0607007900	20	
15A	BF51a 15A	0607005200	60		BF52a 15A	0607006600	30		BF53a 15A	0607008000	20	
20A	BF51a 20A	0607005300	60		BF52a 20A	0607006700	30		BF53a 20A	0607008100	20	
30A	BF51a 30A	0607005400	60		BF52a 30A	0607006800	30		BF53a 30A	0607008200	20	
40A	BF51a 40A	0607005500	60		BF52a 40A	0607006900	30		BF53a 40A	0607008300	20	
50A	BF51a 50A	0607005600	60		BF52a 50A	0607007000	30		BF53a 50A	0607008400	20	
60A	BF101a 60A	0608002100	60		BF102a 60A	0608002700	30		BF103a 60A	0608003300	20	
75A	BF101a 75A	0608002200	60		BF102a 75A	0608002800	30		BF103a 75A	0608003400	20	
100A	BF101a 100A	0608002300	60		BF102a 100A	0608002900	30		BF103a 100A	0608003500	20	
Weight/pc		0.11kg				0.23kg				0.35kg		

BF-c — For 5kA at 240VAC / 2.5kA at 415VAC

1Pole					2Poles				3Pole			
In	Model	Catalog No.	Pack. unit (Pcs.)	PRICE	Model	Catalog No.	Pack. unit (Pcs.)	PRICE	Model	Catalog No.	Pack. unit (Pcs.)	PRICE
10A	BF51c 10A	0607005800	60		BF52c 10A	0607007200	30		BF53c 10A	0607008600	20	
15A	BF51c 15A	0607005900	60		BF52c 15A	0607007300	30		BF53c 15A	0607008700	20	
20A	BF51c 20A	0607006000	60		BF52c 20A	0607007400	30		BF53c 20A	0607008800	20	
30A	BF51c 30A	0607006100	60		BF52c 30A	0607007500	30		BF53c 30A	0607008900	20	
40A	BF51c 40A	0607006200	60		BF52c 40A	0607007600	30		BF53c 40A	0607009000	20	
50A	BF51c 50A	0607006300	60		BF52c 50A	0607007700	30		BF53c 50A	0607009100	20	
60A	BF101c 60A	0608002400	60		BF102c 60A	0608003000	30		BF103c 60A	0608003600	20	
75A	BF101c 75A	0608002500	60		BF102c 75A	0608003100	30		BF103c 75A	0608003700	20	
100A	BF101c 100A	0608002600	60		BF102c 100A	0608003200	30		BF103c 100A	0608003800	20	
Weight/pc		0.11kg				0.23kg				0.35kg		

BF — 2.5kA at 240VAC

1Pole					2Poles			
In	Model	Catalog No.	Pack. unit. (Pcs.)	PRICE	Model	Catalog No.	Pack. unit pcs.	PRICE
6A	BF51 6A	0605000100	50		BF52 6A	0605002100	30	
10A	BF51 10A	0605000200	50		BF52 10A	0605000900	30	
15A	BF51 15A	0605000300	50		BF52 15A	0605001000	30	
20A	BF51 20A	0605000400	50		BF52 20A	0605001100	30	
30A	BF51 30A	0605000600	50		BF52 30A	0605001200	30	
40A	BF51 40A	0605000700	50		BF52 40A	0605001300	30	
50A	BF51 50A	0605000800	50		BF52 50A	0605001400	30	
Weight/pc		0.14kg				0.29kg		

Residential breakers

60mm depth & Lug terminal miniature circuit breakers, BF type

BFa-LUG

Description

- Trip unit with a fixed thermal and fixed magnetic trip
- All operating mechanisms are of the quick-make, quick-break type and are "trip free"
- Operating handle is "Trip to Off"
- Operating hand and face plate shall indicate rated ampacity.
- Electrical durability: 10, 000 operations at In
- Reference temperature: 50˚C
- Connection by lug terminal

BF-PLUG

Technical data

Type		BFa-LUG	BF-PLUG
Rated current		10, 15, 20, 30, 40, 50, 60, 75, 100A	10, 15, 20, 30, 40, 50A
Breaking capacity, Icu	120V	-	10kA
	240V	10kA	10kA
	415V	2.5kA	-
Rated insulation voltage		460V	240V
Number of poles		3pole	1, 2, 3pole
Approval		IEC 60947-2	
Protection		Overload and short circuit	
Type of trip		Thermal magnetic release	
Type of terminal		Lug type (14-1 AWG.)	Lug type (14-6 AWG.)
Installation		Holder mounting	Plug-in
Width		60mm	60mm
Slot		50mm	56mm
Accessory		Not available	

Catalog No.

BFa-LUG *10kA at 240VAC / 2.5kA at 415VAC*

3Pole				
In	**Model**	**Catalog No.**	**Pack. unit (Pcs.)**	**PRICE**
10A	BF53a LUG 10A LINE/LOAD	0607009300	20	
15A	BF53a LUG 15A LINE/LOAD	0607009400	20	
20A	BF53a LUG 20A LINE/LOAD	0607009500	20	
30A	BF53a LUG 30A LINE/LOAD	0607009600	20	
40A	BF53a LUG 40A LINE/LOAD	0607009700	20	
50A	BF53a LUG 50A LINE/LOAD	0607009800	20	
60A	BF103a LUG 60A LINE/LOAD	0608003900	20	
75A	BF103a LUG 75A LINE/LOAD	0608004000	20	
100A	BF103a LUG 100A LINE/LOAD	0608004100	20	
10A	BF53a LUG 10A LINE	0607009900	20	
15A	BF53a LUG 15A LINE	0607010000	20	
20A	BF53a LUG 20A LINE	0607010100	20	
30A	BF53a LUG 30A LINE	0607010200	20	
40A	BF53a LUG 40A LINE	0607010300	20	
50A	BF53a LUG 50A LINE	0607010400	20	
60A	BF103a LUG 60A LINE	0608004200	20	
75A	BF103a LUG 75A LINE	0608004300	20	
100A	BF103a LUG 100A LINE	0608004400	20	
Weight/pc		0.5kg		

BF-PLUG *10kA at 120/240VAC*

1pole				
In	**Model**	**Catalog No.**	**Pack. unit (Pcs.)**	**PRICE**
10A	BF51 PLUG 10A	06110705R0	120	
15A	BF51 PLUG 15A	06110706R0	120	
20A	BF51 PLUG 20A	06110707R0	120	
30A	BF51 PLUG 30A	06110708R0	120	
40A	BF51 PLUG 40A	06110709R0	120	
50A	BF51 PLUG 50A	06110711R0	120	
Weight/pc		0.14kg		

2pole				
In	**Model**	**Catalog No.**	**Pack. unit (Pcs.)**	**PRICE**
10A	BF52 PLUG 10A	06120682R0	60	
15A	BF52 PLUG 15A	06120683R0	60	
20A	BF52 PLUG 20A	06120684R0	60	
30A	BF52 PLUG 30A	06120685R0	60	
40A	BF52 PLUG 40A	06120686R0	60	
50A	BF52 PLUG 50A	06120687R0	60	
Weight/pc		0.29kg		

3pole				
In	**Model**	**Catalog No.**	**Pack. unit (Pcs.)**	**PRICE**
10A	BF53 PLUG 10A	06130240R0	40	
15A	BF53 PLUG 15A	06130241R0	40	
20A	BF53 PLUG 20A	06130242R0	40	
30A	BF53 PLUG 30A	06130243R0	40	
40A	BF53 PLUG 40A	06130244R0	40	
50A	BF53 PLUG 50A	06130245R0	40	
Weight/pc		0.43kg		

Residential breakers

42mm depth twin breakers, BS & GR type

30AF / 2pole

MCCB

RCCB

30AF / 3pole

MCCB

RCCB

Technical data

	MCCB	RCCB
Type	**BS**	**GR**
Protection	overload	overload & ground fault or ground fault only (30GRh)
Rated current In	6, 10, 15, 20, 30A	15, 20, 30A
Rated voltage	110/220VAC	AC 88~242V
Rated residual current, $I_{\Delta n}$	Not applicable	15mA, 30mA
Breaking capacity, Icu	1.5kA at 110/220VAC	
Residual non-operating current	Not applicable	$0.5I_{\Delta n}$
Residual current off-time at $I_{\Delta n}$	Not applicable	≤0.03 sec
Type of trip unit	Thermal	Thermal for overcurrent pick-up Electronic for earth leakage pick-up
Number of poles	1P+N, 2P, 2P+N	
Connection	Front	
Mounting	Bolt on	
Depth	42mm	
Type of terminal	Lug	

Description

- Compact and economic type with single- mold frame.
- Offering MCCBs and RCCBs in the same physical and ampere frame size.
- Trip unit with a fixed thermal without a magnetic trip.
- All operating mechanisms are "trip free"
- Two and three-pole breakers shall have common tripping of allpoles.
- Operating handle is "Trip to Off".
- Thermal elements shall be factory calibrated to operate in a 40℃ ambient environment.

Catalog No.

BS32a

1pole+N	MCCB					RCCB	
	In	BS31a	Pack. unit (Pcs.)	BS31a c/w enclosure	Pack. unit (Pcs.)	30GRh 15mA	30GRh 30mA
	6A	0001000100	100	0001000700	60	-	-
	10A	0001000200	100	0001000800	60	-	-
	15A	0001000300	100	0001000900	60	-	-
	20A	0001000400	100	0001001000	60	-	-
	30A	0001000500	100	0001001100	60	0751000200	0751000300
	Weight/pc	0.1kg		0.1kg		0.1kg	

Note) BS31a and 30GRh are in the same physical size.
30GRh is the breaker with ground fault protection only.

BS33

2pole	MCCB			RCCB			
	In	BS32a	BS32a c/w enclosure	32GRh 30mA	32GRh c/w enclosure	32GRh 15mA	32GRa c/w enclosure
	6A	0001001200	0001001700	-	-	-	-
	10A	0001001300	0001001800	-	-	-	-
	15A	0001001400	0001001900	0751000600	-	-	-
	20A	0001001500	0001002000	0751000800	-	0751001300	-
	30A	0001001600	0001002100	0751001000	0751002400	0751000900	0751001600
	Weight/pc	0.1kg		0.1kg		0.1kg	

Note) BS32a and 32GRh are in the same physical size.

RCCB				
In	32GRa 30mA	32GRa c/w enclosure	32GRa 15mA	32GRa c/w enclosure
6A	-	-	-	-
10A	-	-	-	-
15A	0750000800	0750001100	0750000700	-
20A	0750000900	0750001200	-	-
30A	0750001000	0750001300	-	0750001400
Weight/pc	0.21kg		0.21kg	

2pole+N	MCCB		
	In	BS33	33GR
	15A	0001002200	0752000100
	20A	0001002300	0752000200
	30A	0001002400	0752000300
	Weight/pc	0.15kg	0.28kg

Standard busbars

Description

- Applicable to the 18mm wide module devices
- Rated Voltage: 415VAC
- Current rating: 63A
- Standard length: 1m

Type BB101	For single pole device 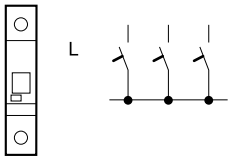
Type BB102	
Type BB201	For 2-pole device 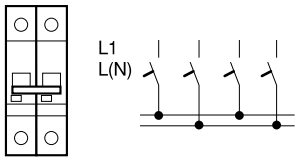
Type BB202	
Type BB301	For 3-pole device 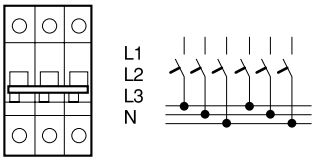
Type BB302	
Type BB401	For 4-pole device 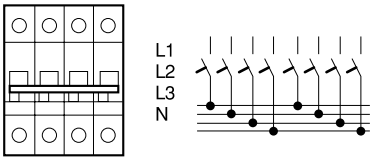
Type BB402	

Model	Catalog No.
Busbar, Type BB101, BKN 1P	70211413001
Busbar, Type BB102, BKM 1P	70211413002
Busbar, Type BB201, BKN 2P	70211413003
Busbar, Type BB202, BKM 2P	70211413004
Busbar, Type BB301, BKN 3P	70211413005
Busbar, Type BB302, BKM 3P	70211413006
Busbar, Type BB401, BKN 4P	70211413007
Busbar, Type BB102, BKM 4P	70211413008

Operating curves & temperature compensation

BKN
BKN-b
BKH
BKP
RKP
RKS

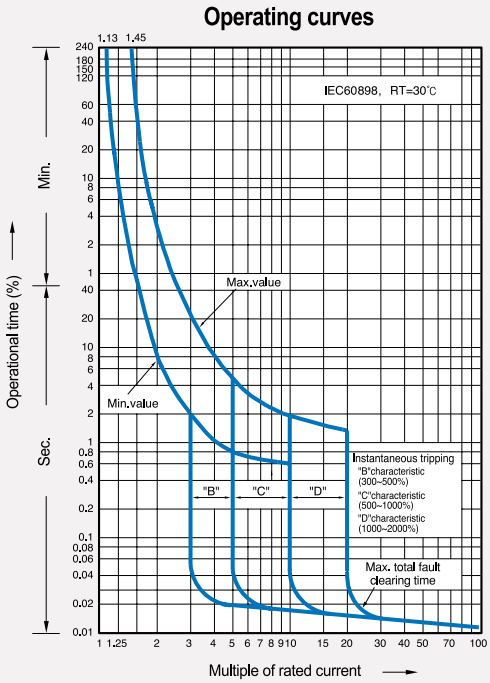

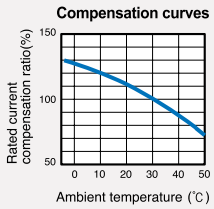

1.BKN, BKN-b, BKP, RKP and RKS

(Temperature compensation table)(IEC60 898-1)

In(A)	20℃	25℃	30℃	35℃	40℃	45℃	50℃	55℃	60℃
1	1.05	1.02	1.0	0.98	0.95	0.93	0.9	0.88	0.85
2	2.08	2.04	2.0	1.96	1.92	1.88	1.84	1.8	1.74
3	3.18	3.09	3.0	2.91	2.82	2.7	2.61	2.49	2.37
4	4.24	4.12	4.0	3.88	3.76	3.64	3.52	3.36	3.24
6	6.24	6.12	6.0	5.88	5.76	5.64	5.52	5.4	5.3
10	10.6	10.3	10.0	9.7	9.3	9.0	8.6	8.2	7.8
16	16.8	16.5	16.0	15.5	15.2	14.7	14.2	13.8	13.3
20	21.0	20.6	20.0	19.4	19.0	18.4	17.8	17.4	16.8
25	26.2	25.7	25.0	24.2	23.7	23.0	22.2	21.5	20.7
32	33.5	32.9	32.0	31.4	30.4	29.8	28.4	28.2	27.5
40	42.0	41.2	40.0	38.8	38.0	36.8	35.6	34.4	33.2
50	52.5	51.5	50.0	48.5	47.4	45.5	44.0	42.5	40.5
63	66.2	64.9	63.0	61.0	58.0	56.7	54.2	51.7	49.2

I1: 113% In, I2: 145% In according to IEC60 898-1

2.BKH

(Temperature compensation table)(IEC60 947-2)

In(A)	20℃	25℃	30℃	35℃	40℃	45℃	50℃	55℃	60℃
6	6.38	6.28	6.19	6.1	6	5.89	5.79	5.68	5.58
10	11	10.7	10.5	10.3	10	9.5	9	8.7	8.5
16	17	16.5	16	16	16	15.5	15	14.5	14
20	22.5	22	21	20.5	20	19	18.5	18	17
25	27	26.5	26	25.5	25	24	23	22.5	22
32	36	35	34	33	32	31	29.5	28	27
40	45.5	44	43	41.5	40	38.5	37	35	33.5
50	57.5	56	54	52	50	48	45.5	43.5	41
63	72.5	70.5	68	65.5	63	60.5	57.5	54.5	51.5
80	92	89	86	83	80	76.5	73.5	69.5	66
100	115	111	108	104	100	96	91.5	87	82.5
125	143.8	138.8	135	130	125	120	114	108.8	103.1

I1: 105% In, I2: 130% In according to IEC60 947-2

32KGRa
32KGRb

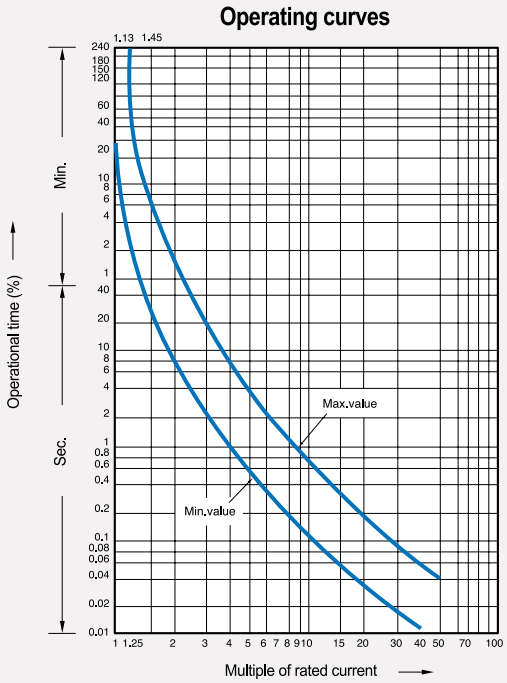

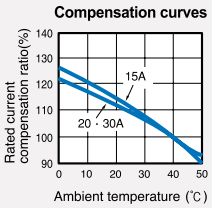

Operating curves & temperature compensation

ABS32Fb
ABS33Fb
ABS52Fb
ABS53Fb
EBS32Fb
EBS33Fb
EBS52Fb
EBS53Fb

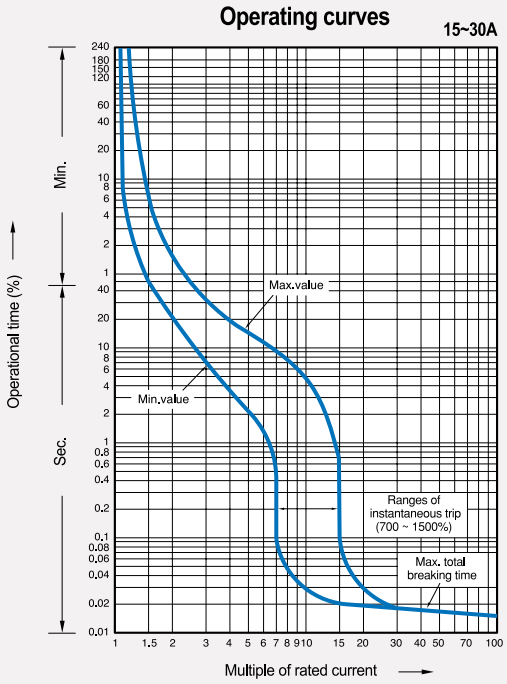

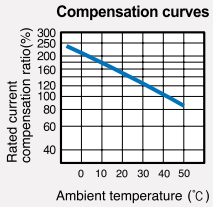

ABS52Fb
ABS53Fb
EBS52Fb
EBS53Fb

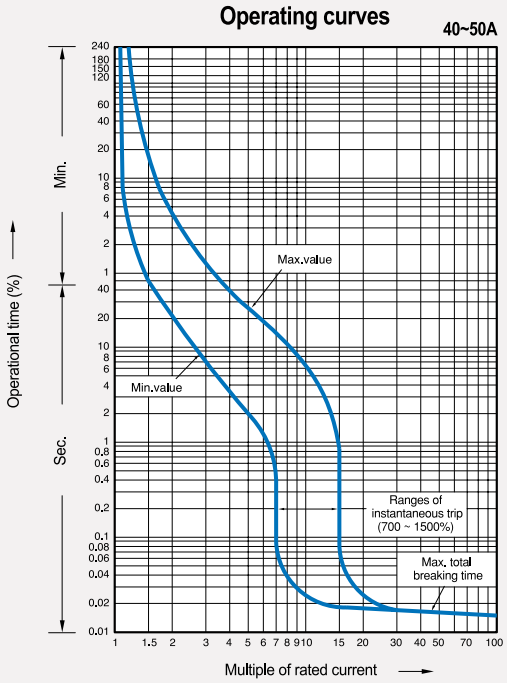

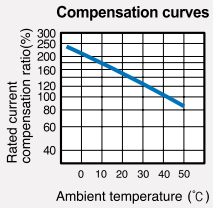

ABS102Fb
ABS103Fb
EBS102Fb
EBS103Fb

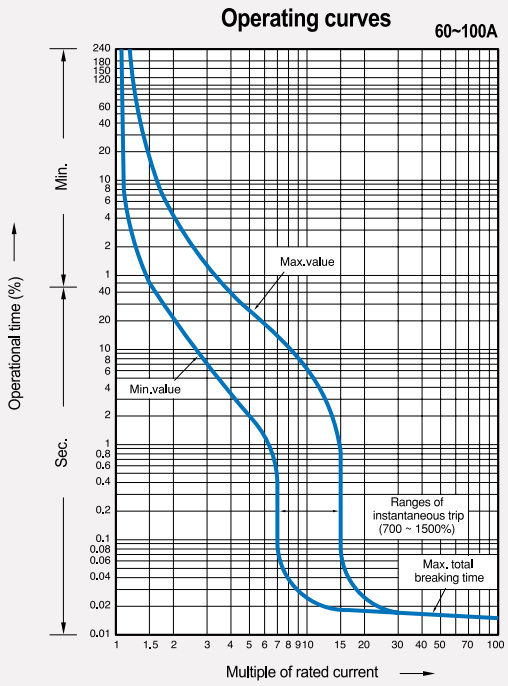

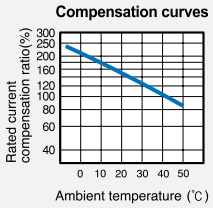

BS-31a
BS-32a

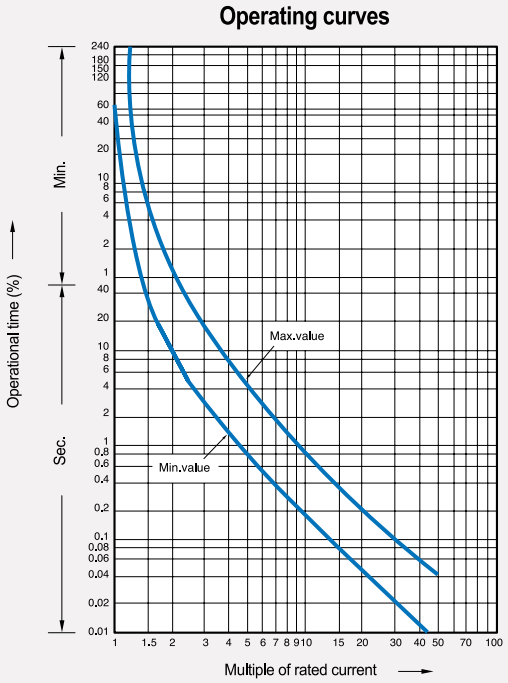

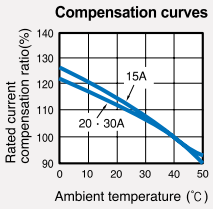

Operating curves & temperature compensation

BF-a

BF-c

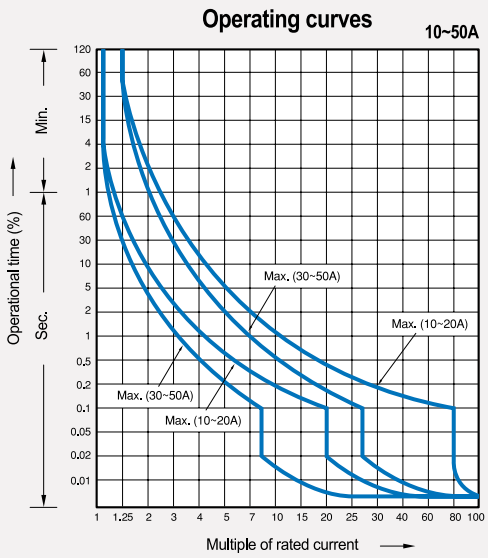

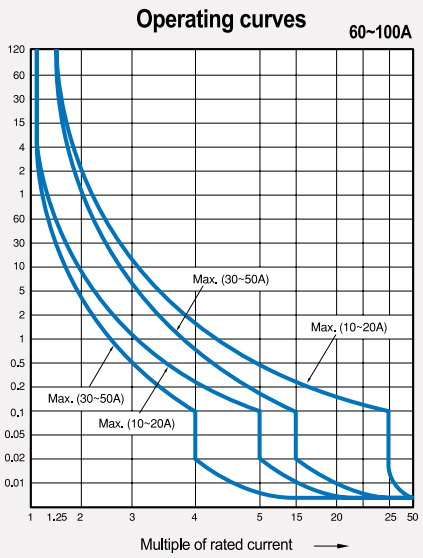

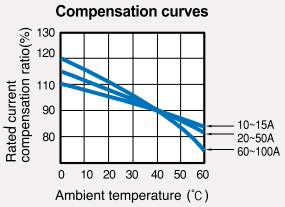

BF

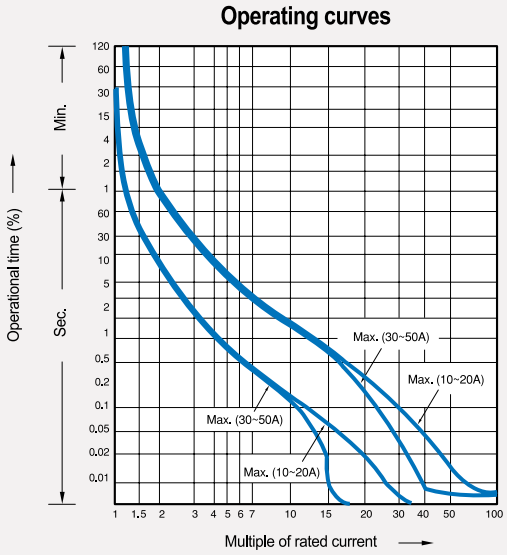

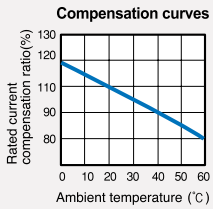

BFa-LUG

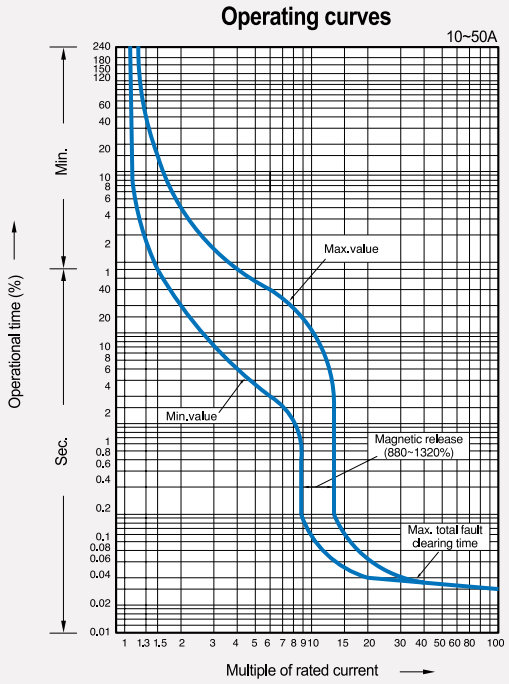
Operating curves
10~50A
Operational time (%)
Min.
Sec.
240
180
150
120
60
40
20
10
8
6
4
2
1
40
20
10
8
6
4
2
1
0.8
0.6
0.4
0.2
0.1
0.08
0.06
0.04
0.02
0.01
Max.value
Min.value
Magnetic release
(880~1320%)
Max. total fault
clearing time
1 1.3 1.5 2 3 4 5 6 7 8 9 10 15 20 30 40 50 60 80 100
Multiple of rated current

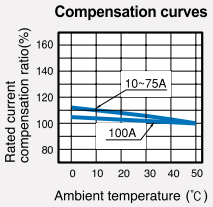
Compensation curves
Rated current
compensation ratio(%)
160
140
120
100
80
10~75A
100A
0 10 20 30 40 50
Ambient temperature (℃)

Operating curves & temperature compensation

BF-PLUG

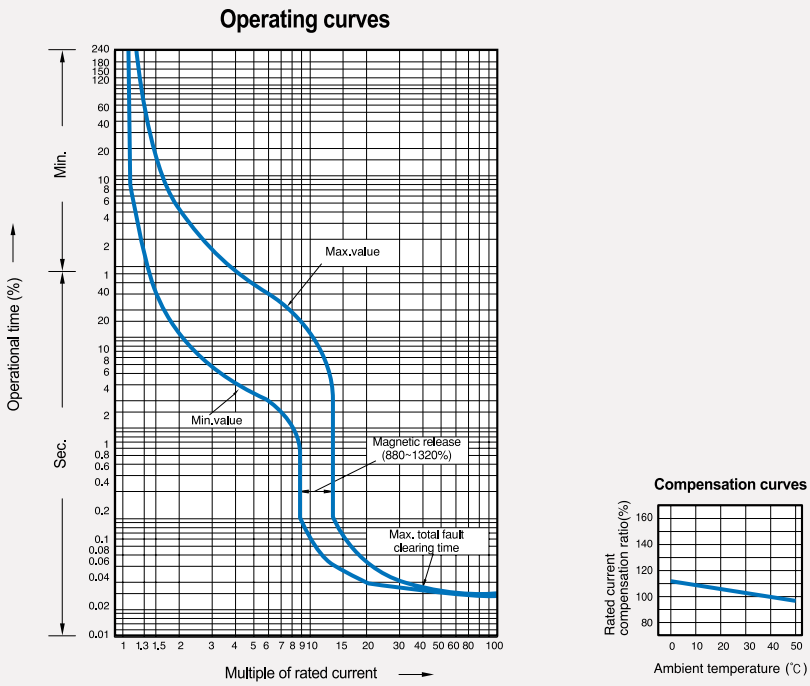

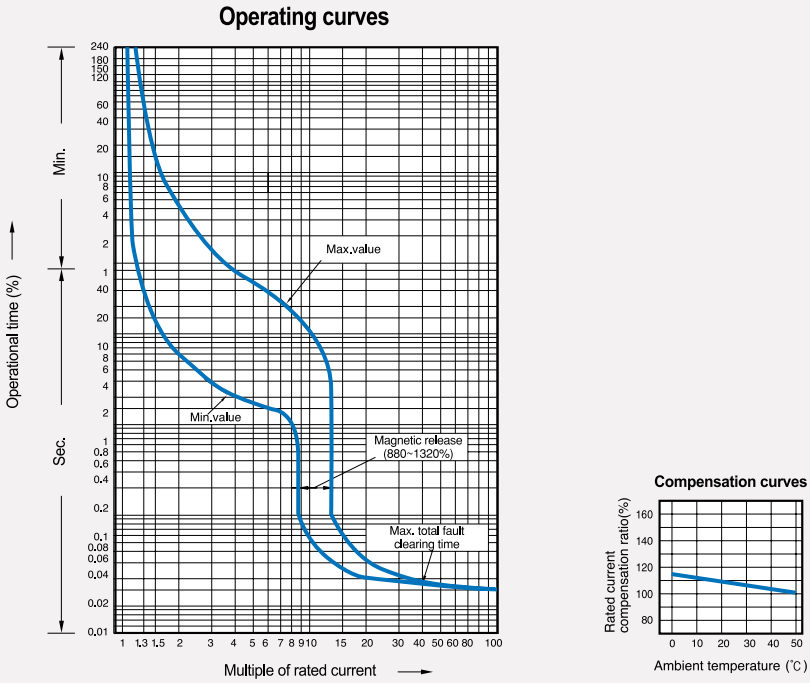

32GRa
32GRh
33GR

Operating curves

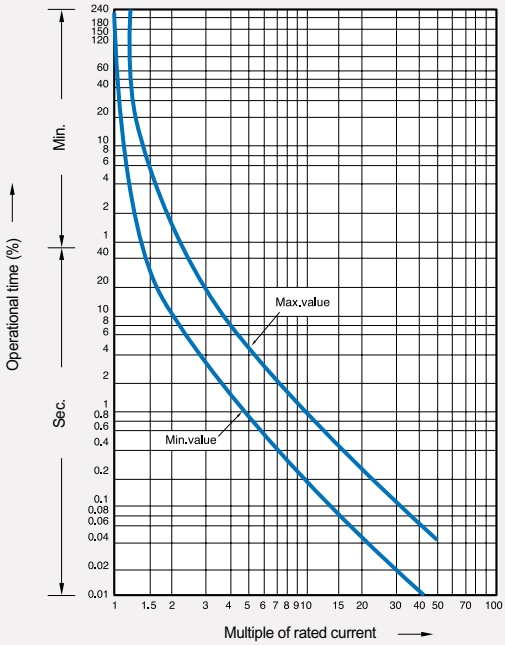

Compensation curves

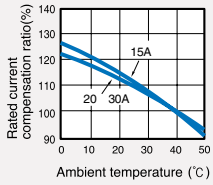

52GRa

Operating curves

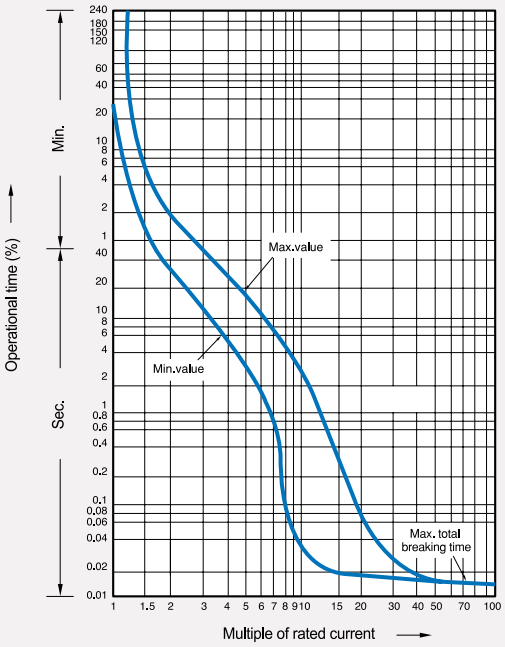

Compensation curves

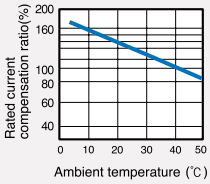

Overall dimensions

BKN

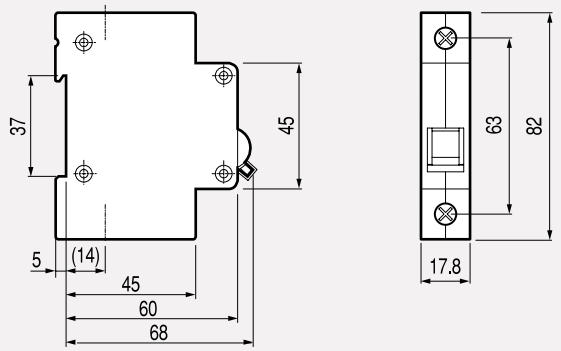

BKN-b

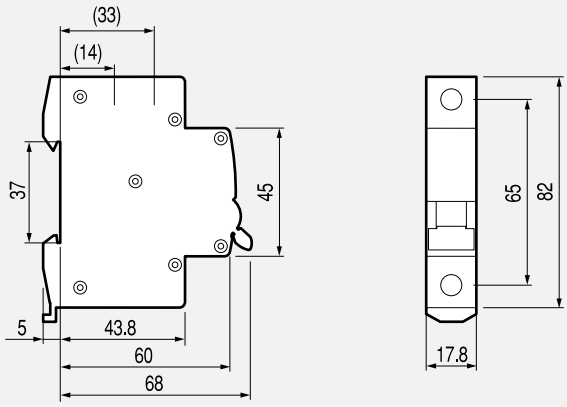

BKH

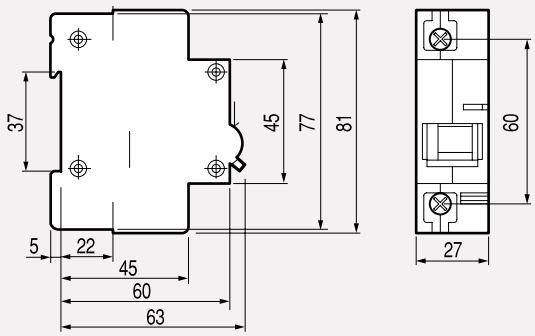

BKP

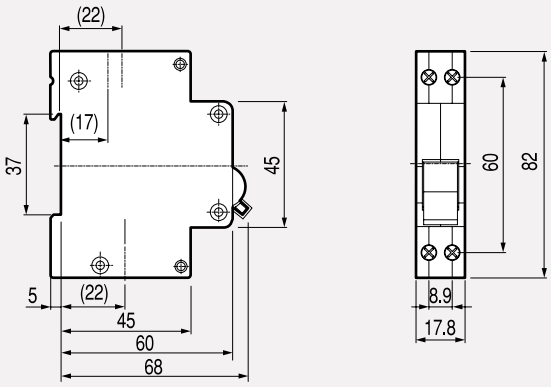

RKP

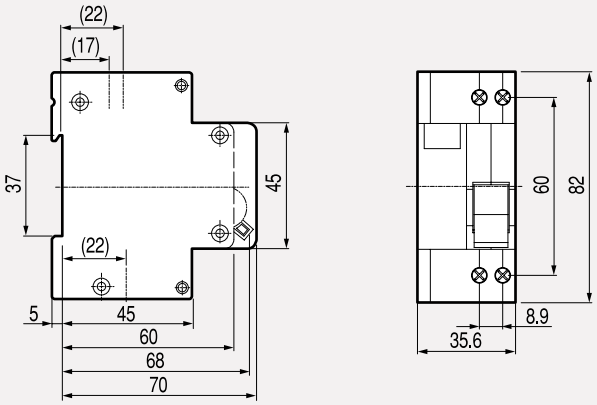

RKN

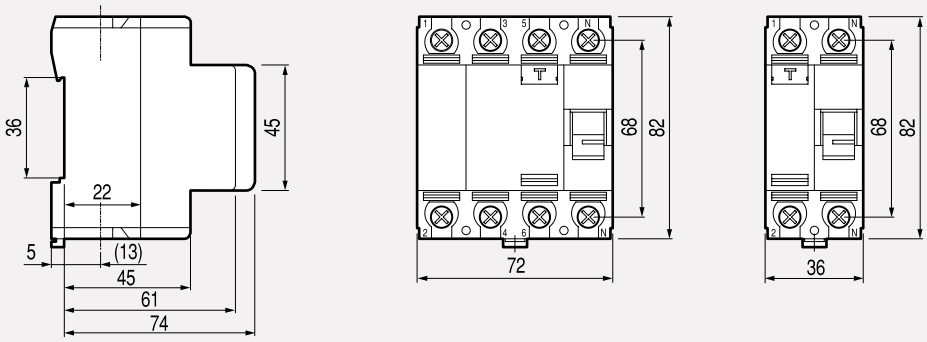

32KGRa

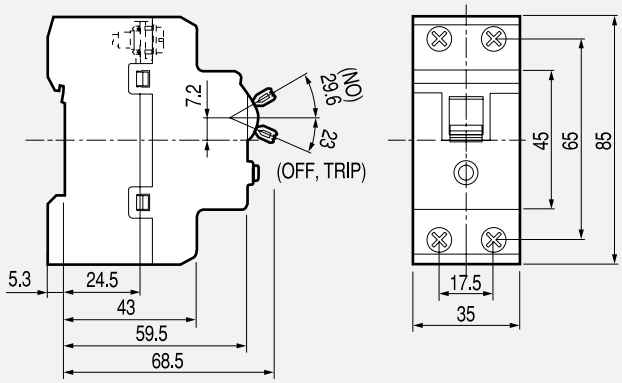

BKD

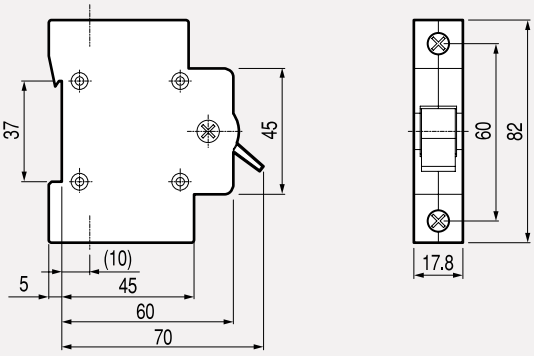

Overall dimensions

ABS32Fb
ABS33Fb
ABS52Fb
ABS53Fb
EBS32Fb
EBS33Fb
EBS52Fb
EBS53Fb

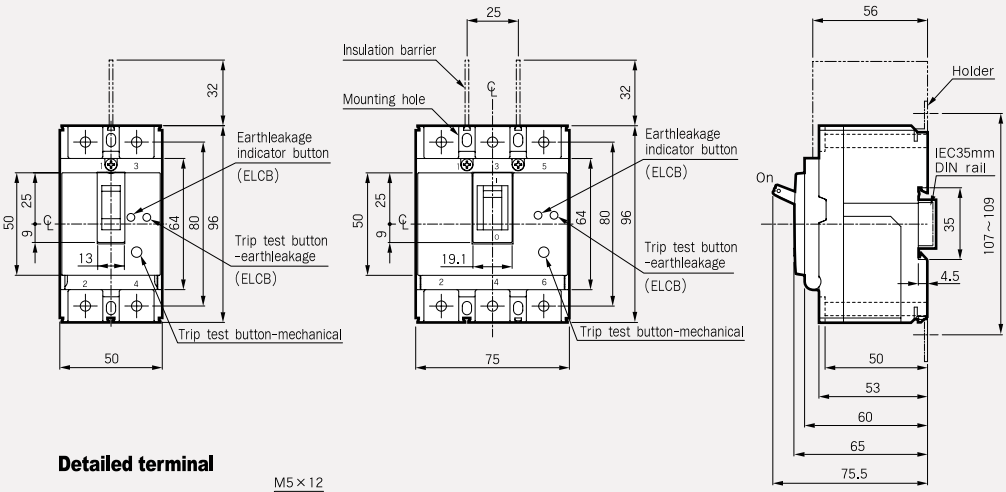

Detailed terminal

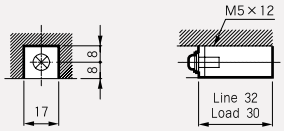

Slot

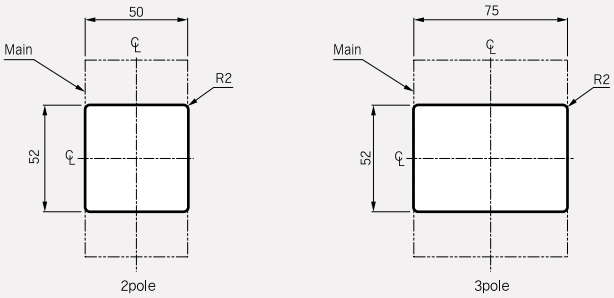

Mounting

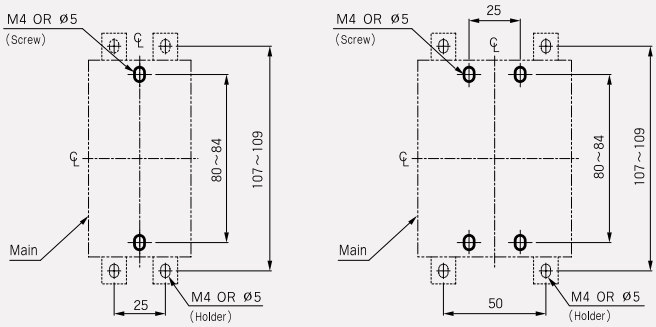

ABS102Fb
ABS103Fb
EBS102Fb
EBS103Fb

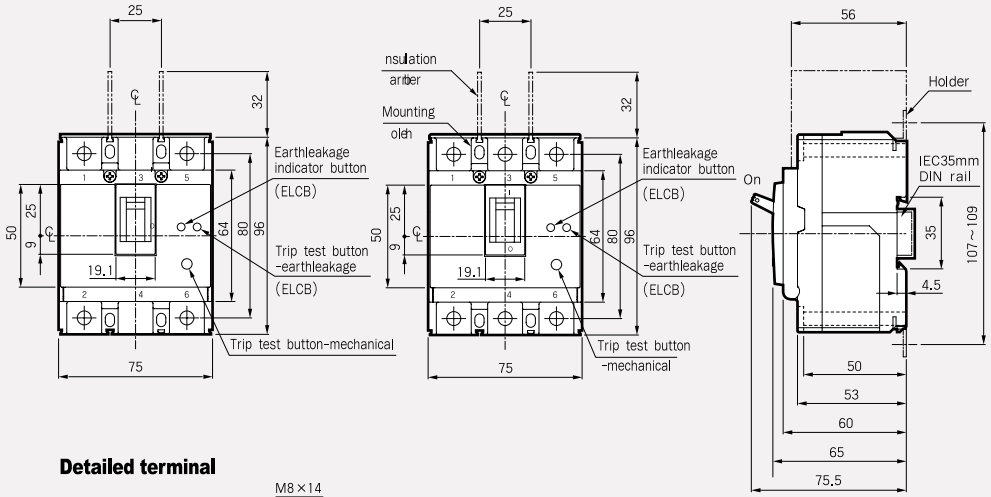

Detailed terminal

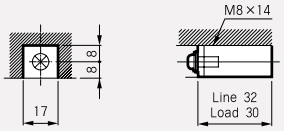

Slot

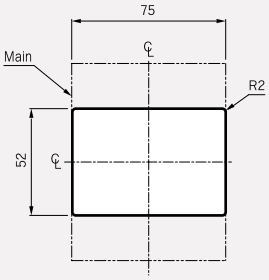

Mounting

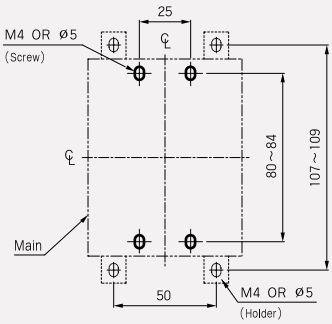

Overall dimensions

BF-a

BF-c

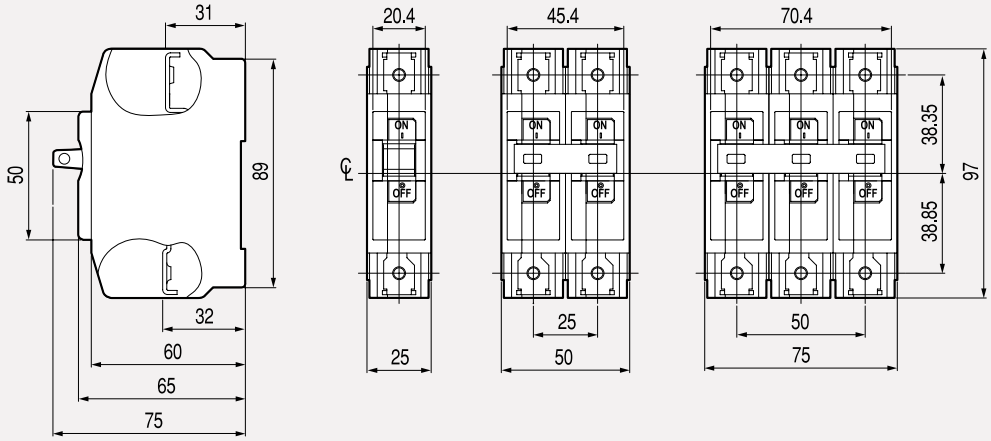

Detailed terminal

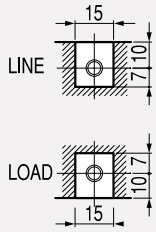

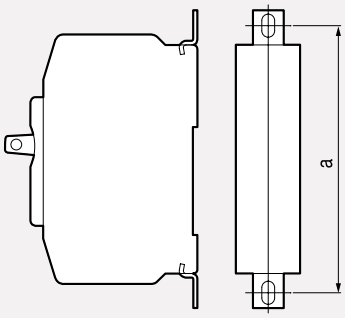

※ BFa, BFc, BF, BFa-LUG same size
(a=99~111mm)

BF

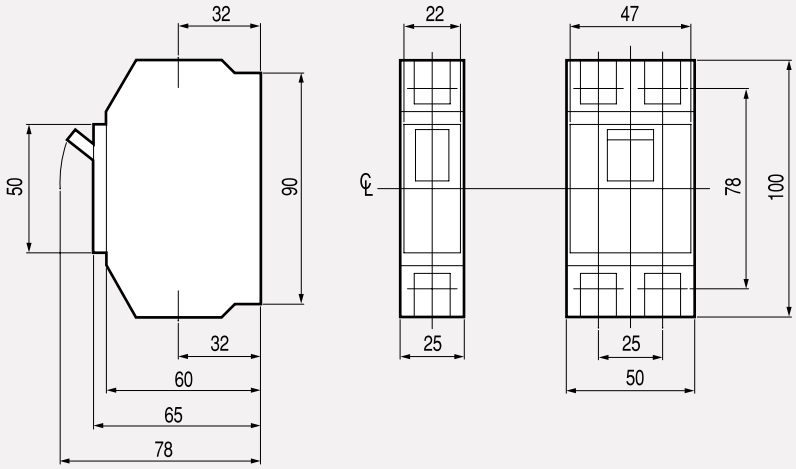

Detailed terminal

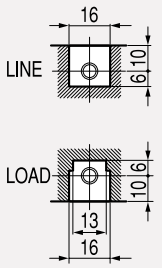

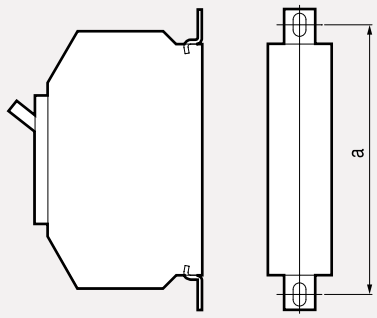

※ BFa, BFc, BF, BFa-LUG same size
(a=99~111mm)

Overall dimensions

BFa-LUG

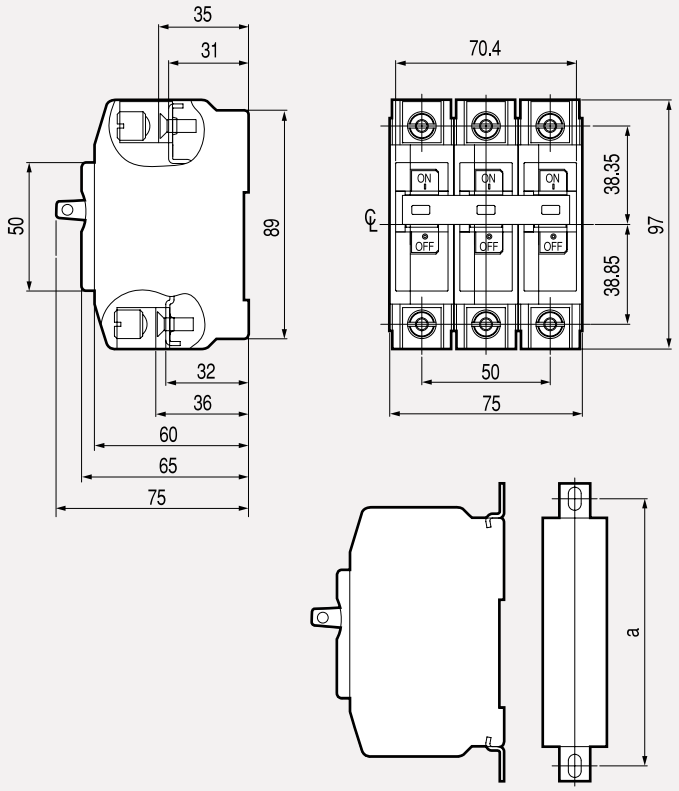

※ BFa, BFc, BF, BFa-LUG same size
(a=99~111mm)

BF-PLUG

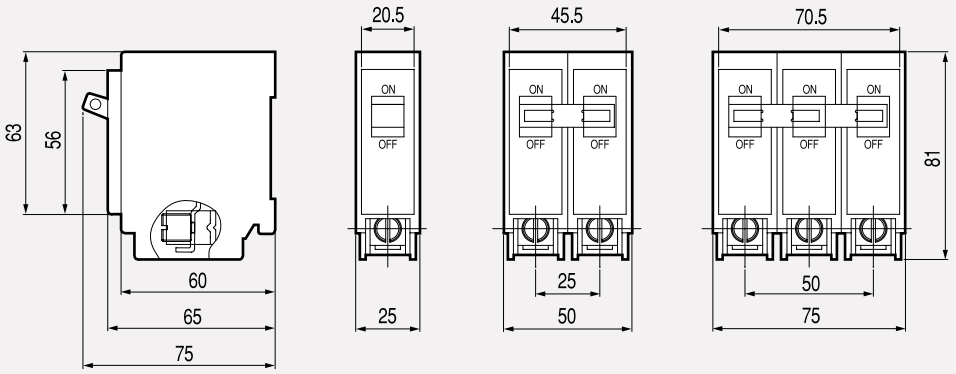

BS-31a BS-32a

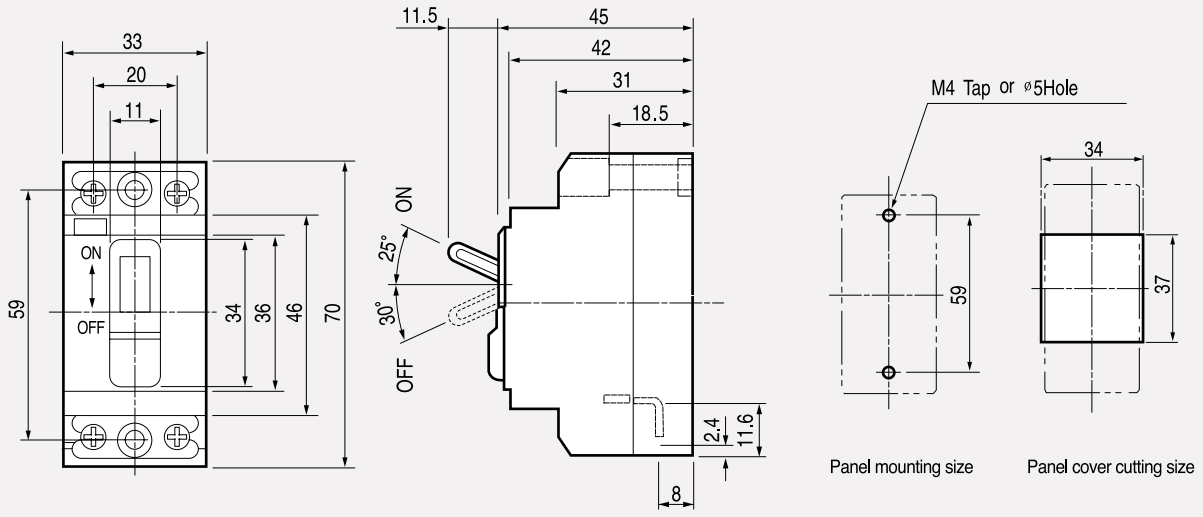

BS-33

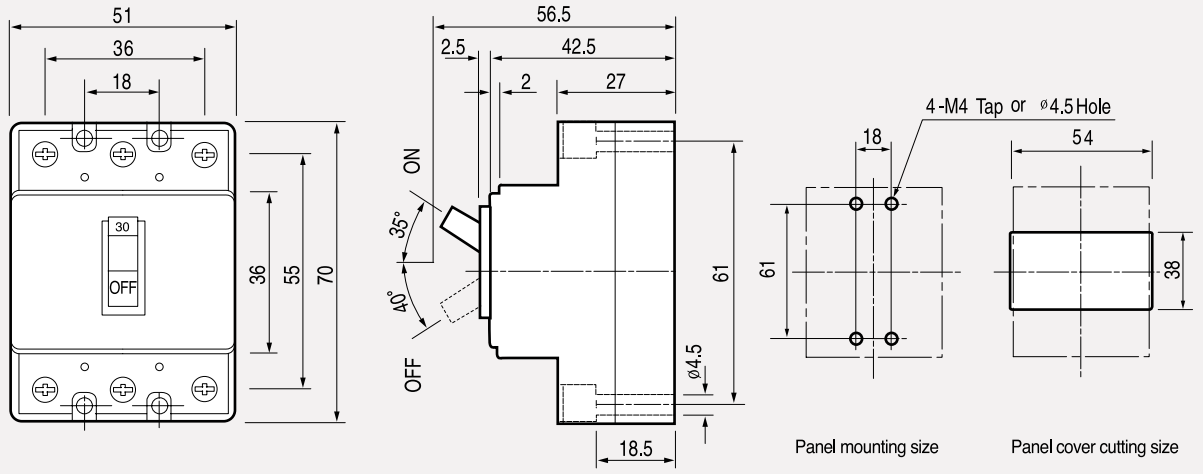

Overall dimensions

52GRa

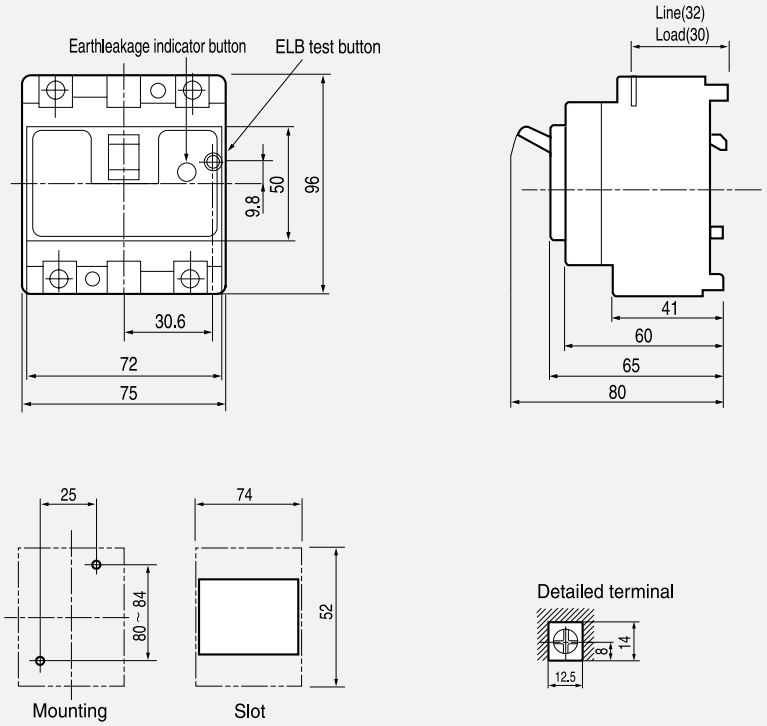

32GRa

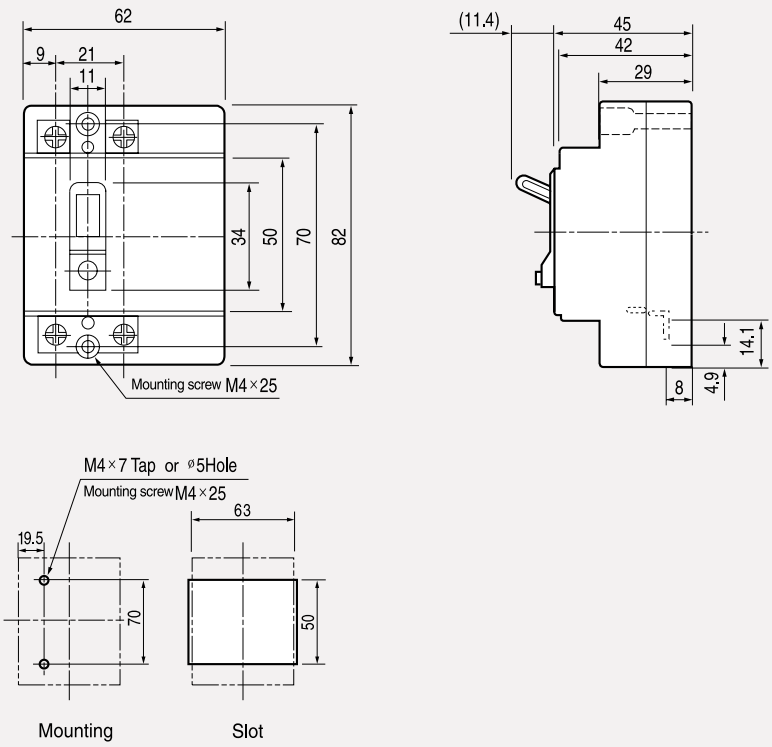

33GR

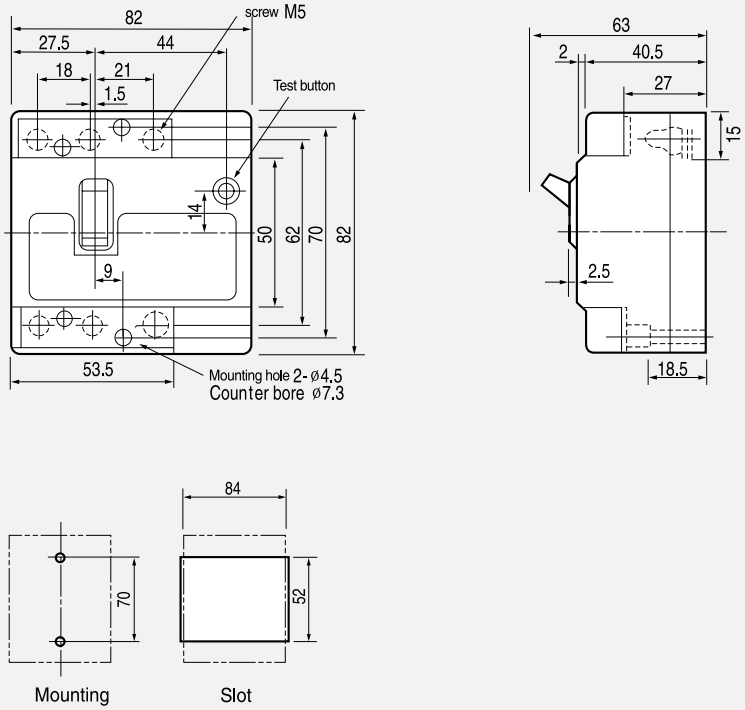

30GRh
32GRh

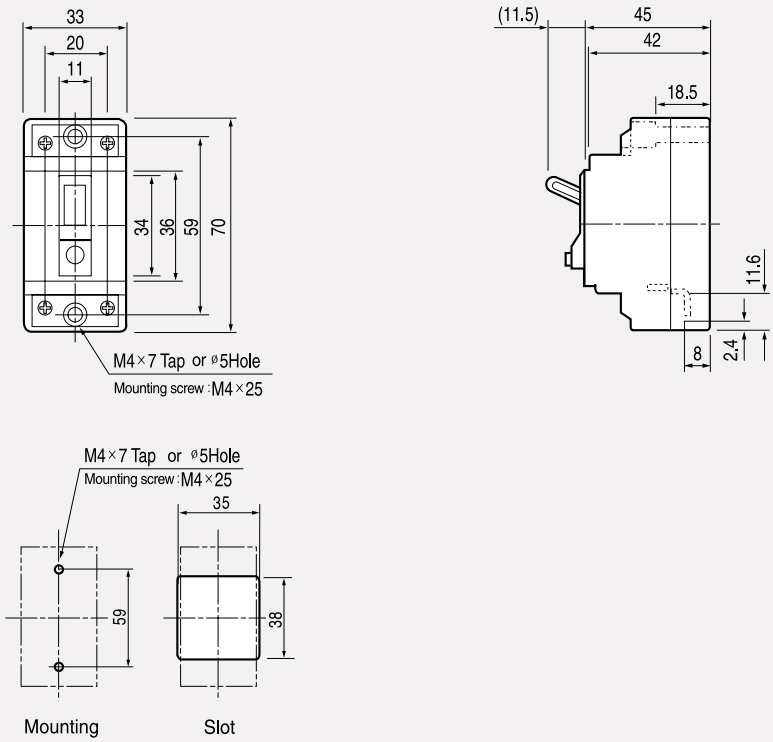

Internet information service

http://eng.lsis.biz

Should you require further information, please visit our English website (eng.lsis.biz).
You will find everything you need to know about products, systems and services.
To obtain the electronic catalogue,
please ask our authorized distributor in your country.
Or it is available on the internet (eng.lsis.biz).

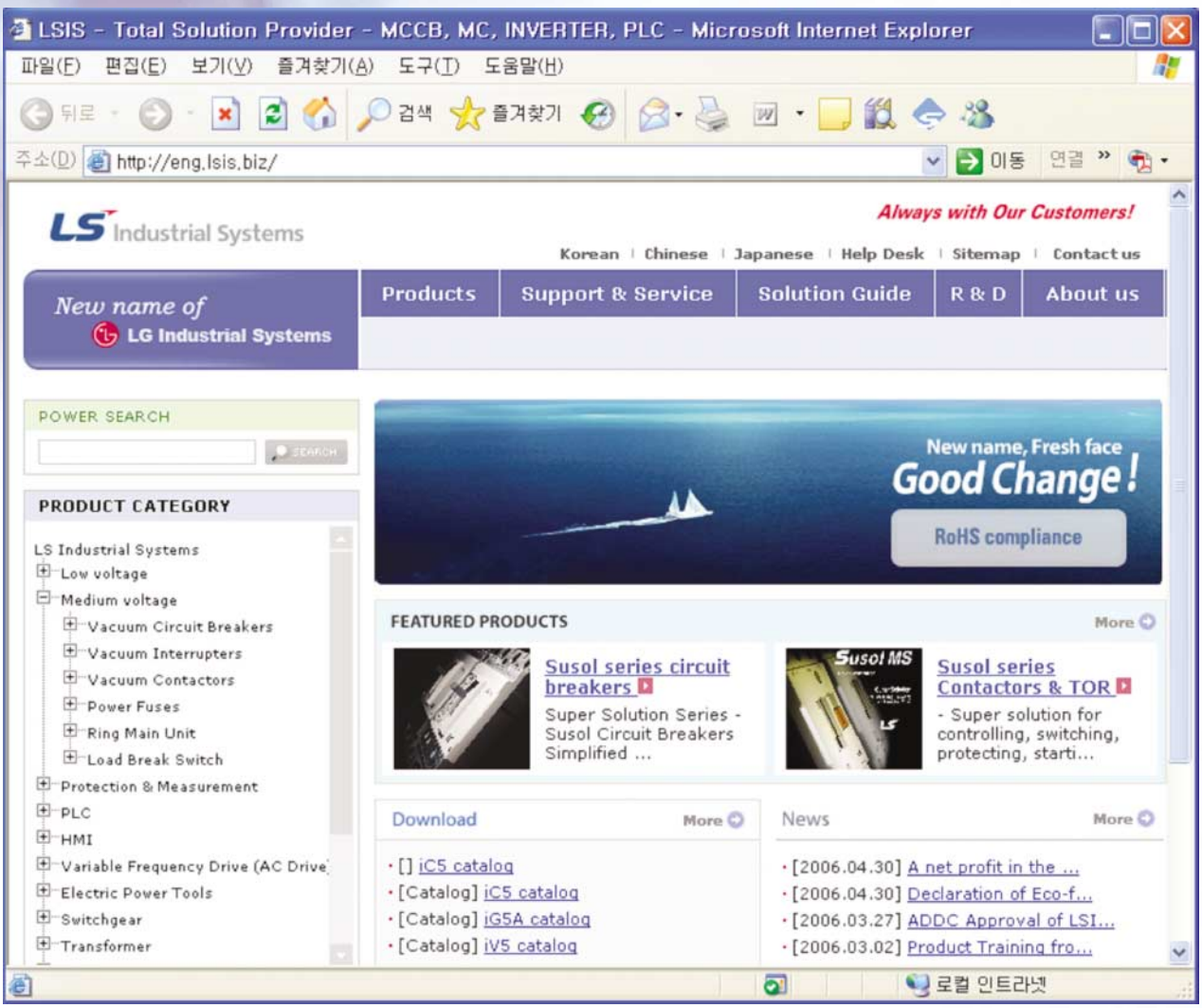

Related site

LS CABLE Home page	**www.lscable.com**
LS Nikko Home page	**www.lsnikko.com**

Products menu

- Low voltage product
- Medium voltage product
- Protection & measurement
- Integragted protection & monitoring equipment
- PLC
- HMI
- Variable frequency device
- Electric power tools
- Switchgear
- Tranceformer
- High voltage product
- Process Automation
- ITS
- Railway system solution
- Photovoltaic system
- Tube & pipes

Support & service menu

- The latest catalogue and old editions are displayed and downloaded.

About us menu

- If you have a question, comment, suggestion please select this menu.

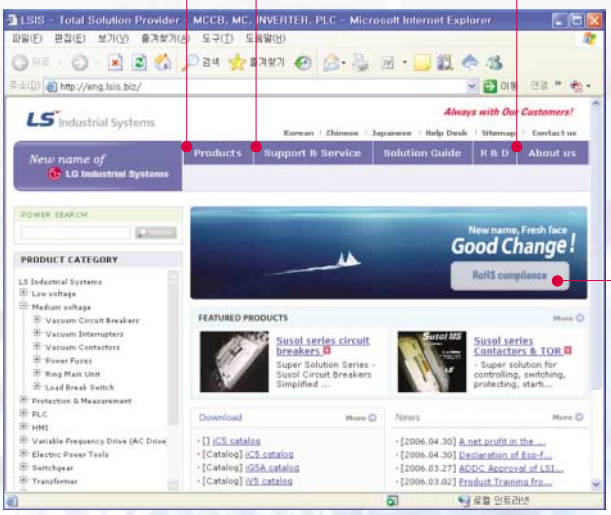

RoHS compliment menu

- RoHS :
  Directive on the Restriction of Hazardous Sub-stances in the Electronic Equipment.
  (Effective on February 13.2003)

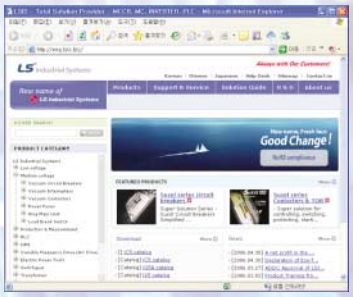

Leader in Electrics & Automation

Safety Instructions

- For your safety, please read user's manual thoroughly before operating.
- Contact the nearest authorized service facility for examination, repair, or adjustment.
- Please contact qualified service technician when you need maintenance.
  Do not disassemble or repair by yourself!
- Any maintenance and inspection shall be performed by the personnel having expertise concerned.

LS Industrial Systems Co., Ltd.

www.lsis.biz

HEAD OFFICE

Yonsei Jaedan Severance Bldg., 84-11, Namdaemunno 5ga,
Jung-gu, Seoul, 100-753, Korea

Tel. (82-2)2034-4870

Fax. (82-2)2034-4713

CHEONG-JU PLANT

Cheong-Ju Plant #1, Song Jung Dong, Hung Duk Ku,
Cheong Ju, 361-720, Korea

Specifications in this catalog are subject to change without notice due to continuous product development and improvement.

Global Network

- **LS Industrial Systems Tokyo Office >> Tokyo, Japan**
  Address: 16F, Higashi-Kan, Akasaka Twin Towers 17-22, 2-chome, Akasaka, Minato-ku Tokyo 107-8470, Japan
  Tel: 81-3-3582-9128 Fax: 81-3-3582-0065 e-mail: dongjins@lsis.biz
- **LS Industrial Systems Dubai Rep. Office >> Dubai, U.A.E**
  Address: P.O.Box-114216, API World Tower, 303B, Sheikh Zayed road, Dubai, UAE.
  Tel: 971-4-3328289 Fax: 971-4-3329444 e-mail: hwyim@lsis.biz
- **LS-VINA Industrial Systems Co., Ltd >> Hanoi, Vietnam**
  Address: LSIS VINA Congty che tao may dien Viet-Hung Dong Anh Hanoi, Vietnam
  Tel: 84-4-882-0222 Fax: 84-4-882-0220 e-mail: srjo@hn.vnn.vn
- **LS Industrial Systems Hanoi Office >> Hanoi, Vietnam**
  Address: Room C21, 5Th Floor, Horison Hotel, 40 Cat Linh , Hanoi, Vietnam
  Tel: 84-4-736-6270/1 Fax: 84-4-736-6269
- **Dalian LS Industrial Systems Co., Ltd. >> Dalian, China**
  Address: No. 15 Liaohexi 3 Road, Economic and Technical Development zone, Dalian, China
  Tel: 86-411-8273-7777 Fax: 86-411-8730-7560 e-mail: lixk@lgis.com.cn
- **LS Industrial Systems (Wuxi) Co., Ltd. >> Wuxi, China**
  Address: 102-A National High&New Tech Industrial Development Area, Wuxi, Jiangsu, China
  Tel: 86-510-534-6666 Fax: 86-510-522-4078 e-mail: Xuhg@lgis.com.cn
- **LS Industrial Systems International Trading (Shanghai) Co., Ltd >> Shanghai, China**
  Address: Room E-G, 12th Floor Huamin Empire Plaza, No.726, West Yan'an Road Shanghai 200050, P.R. China
  Tel: 86-21-6278-4291 Fax: 86-21-6278-4372 e-mail: xuhg@lgis.com.cn
- **LS Industrial Systems Shanghai Office >> Shanghai, China**
  Address: Room 1705~1707, 17th Floor Xinda Commercial Building, No.322, Xian Xia Road Shanghai 200336, China
  Tel: 86-21-6208-7610 Fax: 86-21-6278-4292
- **LS Industrial Systems Beijing Office >> Beijing, China**
  Address: B-Tower 17 Fl. Beijing Global Trade Center B/D. No. 36, BeisanhUanDong-Lu, DongCheong-District, Beijing 100013, P.R. China
  Tel: 86-10-6462-3254 Fax: 86-10-6462-3236 e-mail: linsz@lgis.com.cn
- **LS Industrial Systems Guangzhou Office >> Guangzhou, China**
  Address: Room 1403, 14F, New Poly Tower, 2 Zhongshan Liu Road, Guangzhou, China
  Tel: 86-20-8326-6754 Fax: 86-20-8326-6287 e-mail: zhangch@lgis.com.cn
- **LS Industrial Systems Chengdu Office >> Chengdu, China**
  Address: 12Floor, Guodong Building, No52 Jindun Road Chengdu, 610041, P.R. China
  Tel: 86-28-8612-9151 Fax: 86-28-8612-9236 e-mail: hongkonk@vip.163,com
- **LS Industrial Systems Qingdao Office >> Qingdao, China**
  Address: 7B40,Haixin Guangchang Shenye Building B, No. 9, Shangdong Road Qingdao, China
  Tel: 86-532-580-2539 Fax: 86-532-583-3793 e-mail: bellkuk@hanmail.net

2006. 12

MINIATURE CIRCUIT BREAKERS (E) 2004. 08/(12) 2006. 12 Printed in Korea STAFF