T-solution | Leader in Electrics & Automation

User Manual

MASTER-K80S

LS Programmable Logic Controller

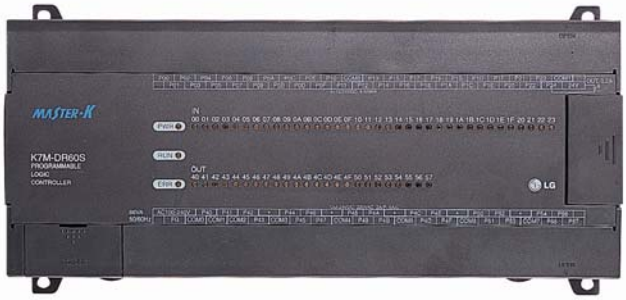

Safety Instructions

- Read this manual carefully before installing, wiring, operating, servicing or inspecting this equipment.
- Keep this manual within easy reach for quick reference.

LS Industrial Systems

www.lsis.biz

SAFETY INSTRUCTIONS

To Prevent injury and property damage, follow these instructions. Incorrect operation due to ignoring instructions will cause harm or damage, the seriousness of which is indicated by the following symbols.

⚠ **WARNING**	**This symbol indicates the possibility of death or serious injury**
⚠ **CAUTION**	**This symbol indicates the possibility of injury or damage to property.**

■ **The meaning of each symbol in this manual and on your equipment is as follows**

⚠ **This is the safety alert symbol.**
Read and follow instructions carefully to avoid dangerous situation.

⚠ **This symbol alerts the user to the presence of "dangerous voltage" inside the product that might cause harm or electric shock.**

SAFETY INSTRUCTIONS

Design Precautions

⚠ Warning

- Install a safety circuit external to the PLC that keeps the entire system safe even when there are problems with the external power supply or the PLC module. Otherwise, serious trouble could result from erroneous output or erroneous operation.
  - Outside the PLC, construct mechanical damage preventing interlock circuits such as emergency stop, protective circuits, positioning upper and lower limits switches and interlocking forward/reverse operation.

    When the PLC detects the following problems, it will stop calculation and turn off all output in the case of watchdog timer error, module interface error, or other hardware errors.

    However, one or more outputs could be turned on when there are problems that the PLC CPU cannot detect, such as malfunction of output device (relay, transistor, etc.) itself or I/O controller. Build a fail safe circuit exterior to the PLC that will make sure the equipment operates safely at such times. Also, build an external monitoring circuit that will monitor any single outputs that could cause serious trouble.

- Make sure all external load connected to output does NOT exceed the rating of output module.

  Overcurrent exceeding the rating of output module could cause fire, damage or erroneous operation.

- Build a circuit that turns on the external power supply when the PLC main module power is turned on.

  If the external power supply is turned on first, it could result in erroneous output or erroneous operation.

SAFETY INSTRUCTIONS

Design Precautions

⚠ Caution

- Do not bunch the control wires or communication cables with the main circuit or power wires, or install them close to each other. They should be installed 100mm (3.94inch) or more from each other.
  Not doing so could result in noise that would cause erroneous operation.

Installation Precautions

⚠ Caution

- Use the PLC in an environment that meets the general specification contained in this manual or datasheet.
  Using the PLC in an environment outside the range of the general specifications could result in electric shock, fire, erroneous operation, and damage to or deterioration of the product.

- Completely turn off the power supply before loading or unloading the module.
  Not doing so could result in electric shock or damage to the product.

- Make sure all modules are loaded correctly and securely.
  Not doing so could cause a malfunction, failure or drop.

- Make sure I/O and extension connector are installed correctly.
  Poor connection could cause an input or output failure.

- When install the PLC in environment of much vibration, be sure to insulate the PLC from direct vibration.
  Not doing so could cause electric shock, fire, and erroneous operation.

- Be sure to there are no foreign substances such as conductive debris inside the module.
  Conductive debris could cause fires, damage, or erroneous operation.

SAFETY INSTRUCTIONS

Wiring Precautions

⚠ Warning

- Completely turn off the external power supply when installing or placing wiring.
  Not doing so could cause electric shock or damage to the product.

- Make sure that all terminal covers are correctly attached.
  Not attaching the terminal cover could result in electric shock.

⚠ Caution

- Be sure that wiring is done correctly be checking the product's rated voltage and the terminal layout.
  Incorrect wiring could result in fire, damage, or erroneous operation.

- Tighten the terminal screws with the specified torque.
  If the terminal screws are loose, it could result in short circuits, fire, or erroneous operation.

- Be sure to ground the FG or LG terminal to the protective ground conductor.
  Not doing so could result in erroneous operation.

- Be sure there are no foreign substances such as sawdust or wiring debris inside the module.
  Such debris could cause fire, damage, or erroneous operation.

SAFETY INSTRUCTIONS

Startup and Maintenance Precautions

⚠ Warning

- Do not touch the terminals while power is on.
  Doing so could cause electric shock or erroneous operation.

- Switch all phases of the external power supply off when cleaning the module or retightening the terminal or module mounting screws.
  Not doing so could result in electric shock or erroneous operation.

- Do not charge, disassemble, heat, place in fire, short circuit, or solder the battery.
  Mishandling of battery can cause overheating or cracks which could result in injury and fires.

⚠ Caution

- Do not disassemble or modify the modules.
  Doing so could cause trouble, erroneous operation, injury, or fire.

- Switch all phases of the external power supply off before mounting or removing the module.
  Not doing so could cause failure or malfunction of the module.

- Use a cellular phone or walky-talky more than 30cm (11.81 inch) away from the PLC
  Not doing so can cause a malfunction.

Disposal Precaution

⚠ Caution

- When disposing of this product, treat it as industrial waste.
  Not doing so could cause poisonous pollution or explosion.

◎ Contents ◎

Chapter 1. General ..... **1-1~1-6**

1.1 Guide to Use this Manual 1-1

1.2 Features 1-2

1.3 Terminology 1-4

Chapter 2. System Configuration ..... **2-1~2-6**

2.1 Overall Configuration 2-1

2.1.1 Basic system 2-2

2.1.2 Cnet I/F System 2-2

2.2 Product functional model 2-4

2.2.1 Product function Block 2-4

2.2.2 GM7 Series System Equipment Product 2-5

Chapter 3. GENERAL SPECIFICATION **3-1**

3.1 General specifications 3-1

Chapter 4. Names of Parts ..... **4-1~4-4**

4.1 Base Unit 4-1

4.1.1 10-point basic unit 4-3

4.1.2 20-point basic unit 4-3

4.1.3 30-points Basic Unit 4-4

4.1.4 40-Points Basic Unit 4-4

4.1.5 60-Points Basic Unit 4-4

4.2 Expansion / Option Module 4-5

4.2.1 Digital I/O Module 4-5

4.2.2 A/D · D/A Combination Module 4-5

4.2.3 Analogue timer Module 4–5

4.2.4 Option Module 4-6

Chapter 5. CPU ..... 5-1~5-42

5.1 Specifications 5-1

5.2 Operation Processing 5-3

5.2.1 Operation Processing Method 5-3
5.2.2 Operation Processing at momentary power failure occurrence 5-4
5.2.3 Scan time 5-5
5.2.4 Scan-watchdog timer 5-5
5.2.5 Timer processing 5-6
5.2.6 Counter processing 5-8

5.3 Program 5-10

5.3.1 Program configuration 5-10
5.3.2 Program execution procedure 5-11
5.3.3 Task 5-14
5.3.4 Error handling 5–21
5.3.5 Precautions when using special modules 5–22

5.4 Operation modes 5-23

5.4.1 RUN mode 5-23
5.4.2 STOP mode 5-24
5.4.3 PAUSE mode 5-24
5.4.4 DEBUG mode 5-24
5.4.5 Operation mode Change 5-25

5.5 Functions 5-27

5.5.1 Restart mode 5-27
5.5.2 Self-diagnosis 5-29
5.5.3 Remote function 5-29
5.5.4 I/O Force On/Off function 5-30
5.5.5 Direct I/O operation function 5-31
5.5.6 External device error diagnosis function 5-32

5.6 Memory Configuration 5–34

5.7 I/O No. Allocation Method 5–36

5.8 Built-in Flash Memory 5–35

5.8.1 Structure 5-36
5.8.2 Usage 5-37

5.9 External Memory Module 5–39

5.9.1 Structure 5-39
5.9.2 Usage 5-39

5.10 RTC Module 5–42
5.10.1 Structure 5-42
5.10.2 Usage 5-42
5.11 Battery 5–44

Chapter 6. Input and Output Modules ..... 6-1~6-10

6.1 Input and Output Specifications 6-1
6.2 Digital Input Specifications 6–2
6.2.1 Base Unit 6-2
6.2.2 Extended Module 6-7
6.3 Digital output Specifications 6–8
6.3.1 Base unit (Relay Output) 6-8
6.3.2 Base unit (Transistor Output) 6-12
6.3.3 Expansion Module 6-15

Chapter 7. Usage of Various Functions ..... 7-1~7-60

7.1 Built-in function 7–1
7.1.1 High-speed counter function 7-1
7.1.2 Pulse Output Function 7-11
7.1.3 Pulse Catch function 7-23
7.1.4 Input Filter function 7-25
7.1.5 PID Control function 7-26
7.1.6 External Interrupt function 7-48
7.2 Special Module 7–50
7.2.1 A/D · D/A Combination 7–50
7.2. 2 Analogue Timer 7–59

Chapter 8. Communication Function ..... 8-1~8-115

8.1 Direct Protocol Communication 8–1
8.1.1 Introduction 8-1
8.1.2 System Configuration method 8-2
8.1.3 Frame Structure 8-5
8.1.4 List of Commands 8-7
8.1.5 Data Type 8-8
8.1.6 Execution of Commands 8-9
8.1.7 1:1 Built-in Communication between GM7's 8-29
8.1.8 Error Codes 8-42

8.2 User Defined Protocol Communication 8–44
8.2.1 Introduction 8-44
8.2.2 Parameter Setting 8-45
8.2.3 Function Block 8-55
8.2.4 Example of Use 1) 8-55
8.3 Modbus Protocol Communication 8–65
8.3.1 Introduction 8-68
8.3.2 Basic Size 8-68
8.3.3 Parameter Setting 8-72
8.3.4 Function Block 8-74

Chapter 9. Installation and Wiring ..... 9-1~9-11

9.1 Installation 9-1
9.1.1 Installation Environment 9-1
9.1.2 Handling Instructions 9-4
9.1.3 Connection of expansion module 9-7
9.2 Wiring 9-8
9.2.1 Power supply Wiring 9-8
9.2.2 I/O devices Wiring 9-10
9.2.3 Grounding 9-10
9.2.4 Cable Specifications for Wiring 9-11

Chapter 10. Maintenance ..... 10-1~10-2

10.1 Maintenance and Inspection 10-1
10.2 Daily Inspection 10-1
10.3 Periodic Inspection 10-2

Chapter 11. Trouble Shooting ..... 11-1~11-13

11.1 Basic Procedures of Troubleshooting 11-1
11.2 Troubleshooting 11-1
11.2.1 Troubleshooting flowchart used when the power LED turns off 11-2
11.2.2 Troubleshooting flowchart used when the error LED is flickering 11-3
11.2.3 Troubleshooting flowchart used when the RUN LED turns off 11-4
11.2.4 Troubleshooting flowchart used when the I/O devices doesn't operate normally 11-5
11.2.5 Troubleshooting flowchart used when a program can't be written to the CPU 11-7

11.3 Troubleshooting Questionnaire 11-8

11.4 Troubleshooting Examples 11-9

11.4.1 Input circuit troubles and corrective actions 11-9

11.4.2 Output circuit troubles and corrective actions 11-10

11.5 Error code list 11-12

Appendix ..... App1-1~App4-1

Appendix 1 System definitions App1-1

Appendix 2 Flag list App2-1

Appendix 3 Function / Function block list App3-1

Appendix 4 Dimensions App4-

Chapter 1. General

1.1 How to Use This Manual

This manual includes specifications, functions and handling instructions for the MASTER-K80Sseries PLC.
This manual is divided up into chapters as follows:

Chapters	Title	Contents
Chapter 1	General	Describes configuration of this manual, unit's features and terminology.
Chapter 2	System configuration	Describes available units and system configurations in the MASTER-K80Sseries.
Chapter 3	General Specification	Describes general specifications of units used in the MASTER-K80Sseries.
Chapter 4	Names and functions	Describes each kind of manufacturing goods, titles, and main functions
Chapter 5	CPU Part	Describes each kind of manufactured goods' usage
Chapter 6	Digital Input and Output Parts	
Chapter 7	Guides on Each Function	
Chapter 8	Communications Function	Describes built-in communication functions
Chapter 9	Installation and Wiring	Describes installation, wiring and handling instructions for reliability of the PLC system
Chapter 10	Maintenance and Inspection	Describes the check items and method for long-term normal operation of the PLC system.
Chapter 11	Troubleshooting	Describes various operation errors and corrective actions.
Appendix1	System Definition	Describes parameter setting for basic I/O and communications module
Appendix 2	Flag List	Describes the types and contents of various flags.
Appendix 3	Dimensions	Shows dimensions of the main uints and expansion modules

REMARK

1) This manual does not describe the programming method. For their own functions, refer to the related user's manuals.

1.2. Features

1) MASTRER-K80S series features

(1) Open network by us of communications protocol in compliance with international standard specifications.

(2) High speed processing with an operation-dedicated processor included.

(3) Various special modules that enlarge the range of application of the PLC

2) MK80S series is extremely compact, to fit a wide range of applications.

(1) High speed processing

High speed processing of 0.5μs/step with an operation-dedicated processor included.

(2) Various built-in functions

The main unit can perform many functions without using separate modules.

It is possible to construct various systems just using the main unit.

- Fast Processing Applications

  -Pulse catch: Allows the main unit to read 4 inputs, each having a pulse width as small as 0.2ms

  -High speed counter: Support high-speed counting up to 1 phase 16kHz, 2 phase 8kHz.

  -External interrupts : Using in applications that have a high-priority event which requires immediate responses.

- The input filter function help reduce the possibility of false input conditions from external noise, such as signal chattering. The filter time can be programmed from 0 to 15 ms.
- Using built-in pulse output without separate positioning module, it can control stepping motor or servo motor.
- Using RS-232C built-in port, it can connect with external devices, such as computers or monitoring devices and communicate 1:1 with MK80S or MK200S system.
- 10 points modules (K7M-DR10S, K7M-DR10S/DC, K7M-DT10S) have both of RS-232C and RS-485 port.
- It has PID control function with which it can easily constitute a system without separate module.

(3) It can easily do On/Off of the system, using RUN/STOP switch.

(4) It can constitute various system, using separate Cnet I/F module. (Except 10 points modules)

(5) It can easily save the user program by simple manipulation in KGLWIN.

(6) Strong self-diagnostic functions

It can detect the cause of errors with more detailed error codes.

(7) It can prevent unintentional reading and writing, using password.

(8) Debugging function

On-line debugging is available if the PLC Operation mode is set to debug mode.

- executed by one command.
- executed by break-point settings.
- executed by the condition of the device
- executed by the specified scan time.

(9) Various program execution function

External and internal interrupt program as well as scan program can be executed by setting the execution condition.

The user can set variously the program execution mode.

1.3 Terminology

The following table gives definition of terms used in this manual.

Terms	Definition	Remarks
Module	A standard element that has a specified function which configures the system. Devices such as I/O board, which inserted onto the mother board or base unit.	Example) CPU module Power Supply module I/O module
Unit	A single module or group of modules that perform an independent Operation as a part of PLC system.	
PLC system	A system which consists of the PLC and peripheral devices. A user program can control the system.	
KGLWIN	A peripheral device for the MASTER-K series. It executes program creation, edit, compile and debugging(A computer software for Windows 95/98).	
KLD-150S	A hand-held loader used for program creation, edit, compile and debugging for MASTER-K series.	
I/O Image Area	Internal memory area of the CPU module which used to hold I/O statuses.	
Watch Dog Timer	Supervisors the pre-set execution times of programs and warns if a program is not completed within the pre-set time.	
FAM	Abbreviation of the word 'Factory Automation Monitoring S/W'. It is used to call S/W packages for process supervision.	
Fnet	Fieldbus network	
Cnet	Computer network(RS232C.RS422/485)	
RTC	Abbreviation of Real Time Clock. It is used to call general IC that contains clock function.	

Terms	Definition	Remarks
Sink Input	Current flows from the switch to the PLC input terminal if a input signal turns on. 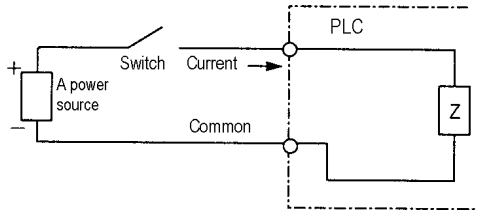	
Source Input	Current flows from the PLC input terminal to the switch after a input signal turns on. 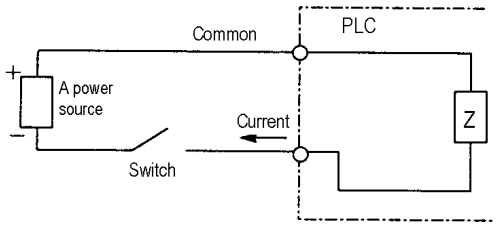	
Sink Output	Current flows from the load to the output terminal and the PLC output turn on. 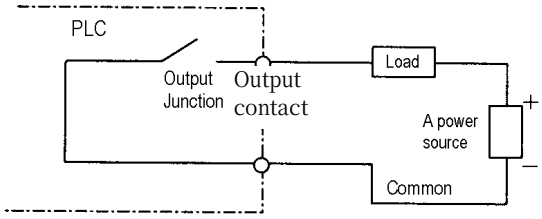	
Source Output	Current flows from the output terminal to the load and the PLC output turn on. 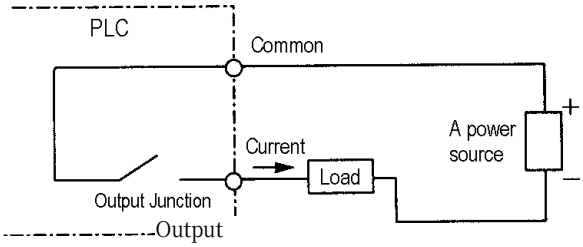	

Chapter 2. System Configuration

The MASTER-K80Sseries has suitable to configuration of the basic, computer link and network systems.

This chapter describes the configuration and features of each system.

2.1. Overall Configuration

2.1.1 Basic system

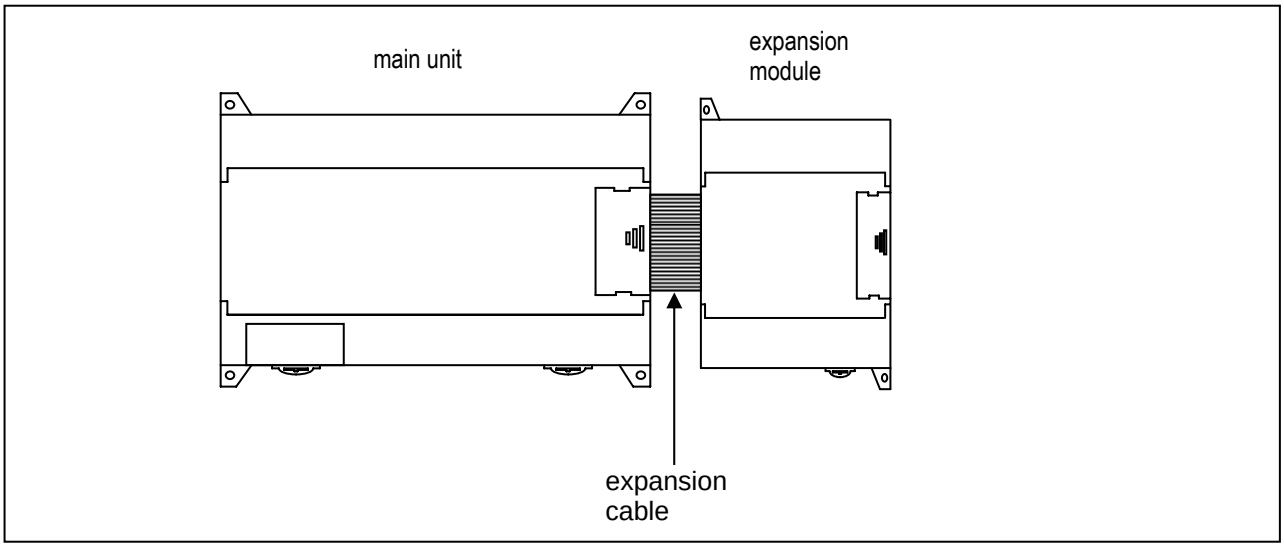

<table>
<tr><td colspan="2">Total I/O points</td><td colspan="2">• 10-80 points</td></tr>
<tr><td rowspan="4">Maximum numbers of expansion modules</td><td>Digital I/O module</td><td>• 2 modules</td><td rowspan="4">Total 3 modules</td></tr>
<tr><td>A/D-D/A module</td><td>• 2 modules</td></tr>
<tr><td>Analog timer</td><td>• 3 modules</td></tr>
<tr><td>Cnet I/F module</td><td>• 1 module[1]</td></tr>
<tr><td rowspan="10">Items</td><td colspan="2">Main unit</td><td colspan="2">• K7M-DR10S, K7M-DR20S, K7M-DR30S, K7M-DR40S, K7M-DR60S K7M-DR10S/DC, K7M-DR20S/DC, K7M-DR30S/DC, K7M-DR40S/DC, K7M-DR60S/DC, K7M-DT10S, K7M-DT20S, K7M-DT30S, K7M-DT40S, K7M-DT60S</td></tr>
<tr><td rowspan="3">Expansion module</td><td>Digital I/O module</td><td colspan="2">• G7E-DR10A</td></tr>
<tr><td>Analog I/O module</td><td colspan="2">• G7F-ADHA, G7F-AD2A</td></tr>
<tr><td>Analog timer</td><td colspan="2">• G7F-AT2A</td></tr>
<tr><td rowspan="4">Communication I/F module</td><td>Cnet I/F modules</td><td colspan="2">• G7L-CUEB, G7L-CUEC</td></tr>
<tr><td>DeviceNet I/F module</td><td colspan="2">• G7L-DBEA</td></tr>
<tr><td>FieldBus I/F module</td><td colspan="2">• G7L-FUEA</td></tr>
<tr><td>Profibus I/F Module</td><td colspan="2">• G7L-PBEA</td></tr>
</table>

[1] Communication modules are not available for 10 points modules (K7M-DR10S, K7M-DR10S/DC, K7M-DT10S)

2.1.2 Cnet I/F system

Cnet I/F System is used for communication between the main unit and external devices using RS-232C/RS-422 Interface. The K80S has a built-in RS-232C port and has also G7L-CUEB for RS-232C, G7L-CUEC for RS-422. It is possible to construct communications systems on demand. (10 points modules include RS-232C and RS-485 ports on the main module, and no external communication module is available)

1) 1:1 Communications system

(1) 1:1 ratio of an external device (computer) to main unit using a built-in port

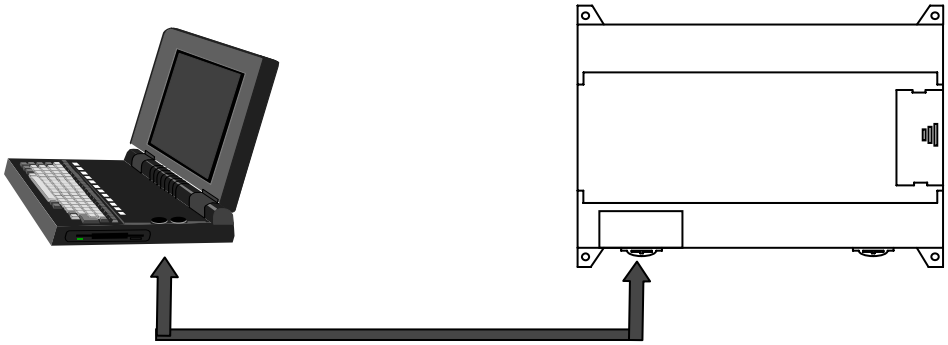

(2) 1:1 ratio of an external device (monitoring unit) to main unit using a built-in port

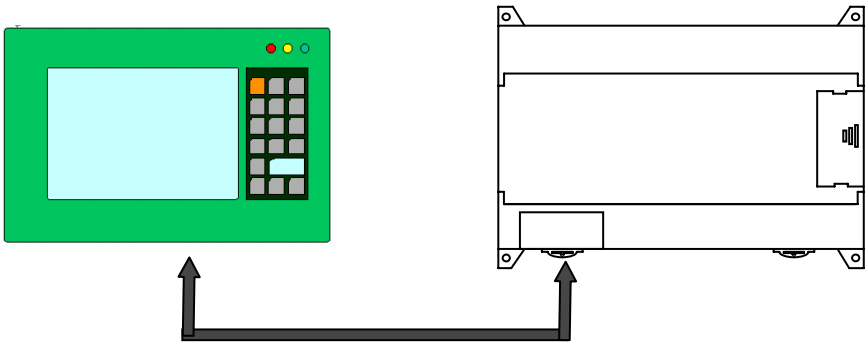

(3) RS-232C Communication over a long distance via modem by Cnet I/F modules

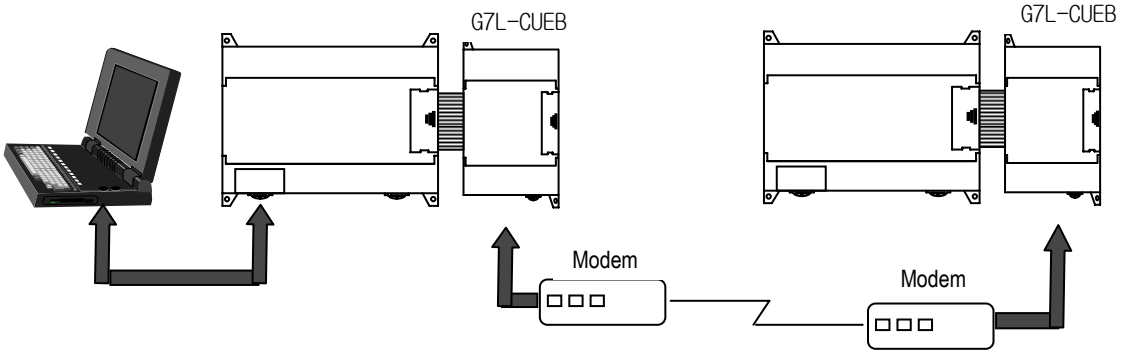

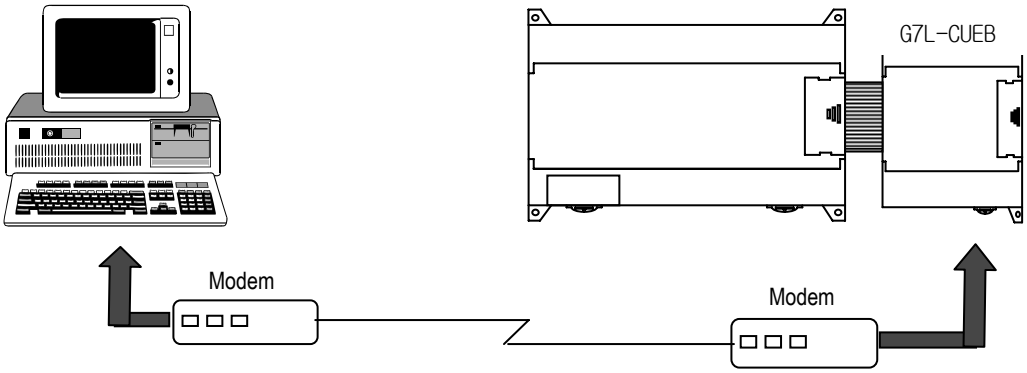

2) 1:n Communications system

This method can connect between one computer and multiple main units for up to 32 stations

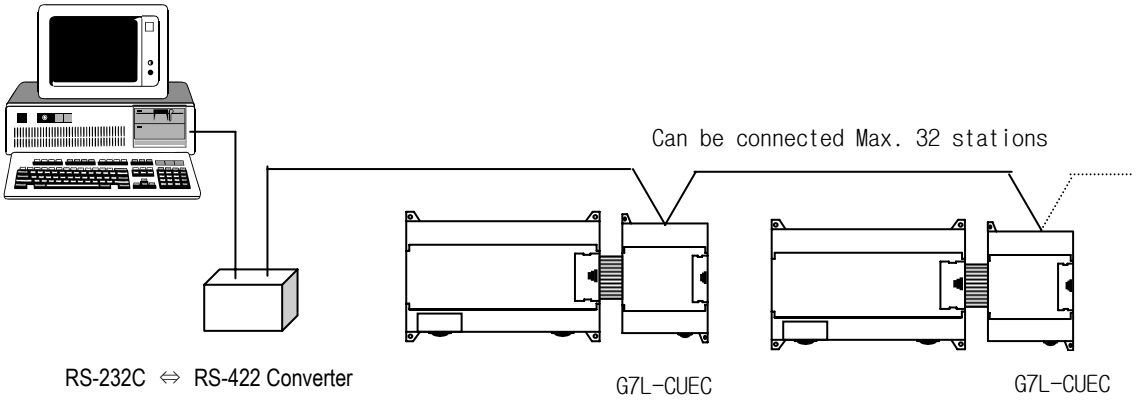

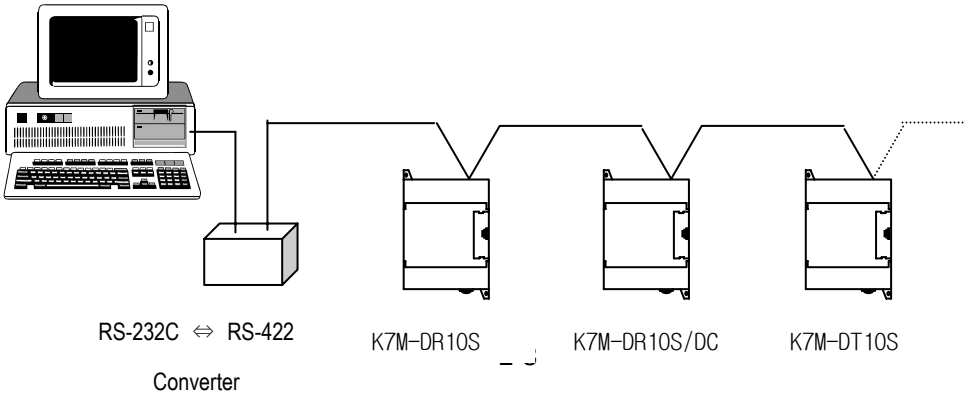

2.2 Product functional model

The following describes functional model of the MASTER-K80Sseries.

2.2.1 Product Function Block

Product function block for the K80Sseries is as follows.

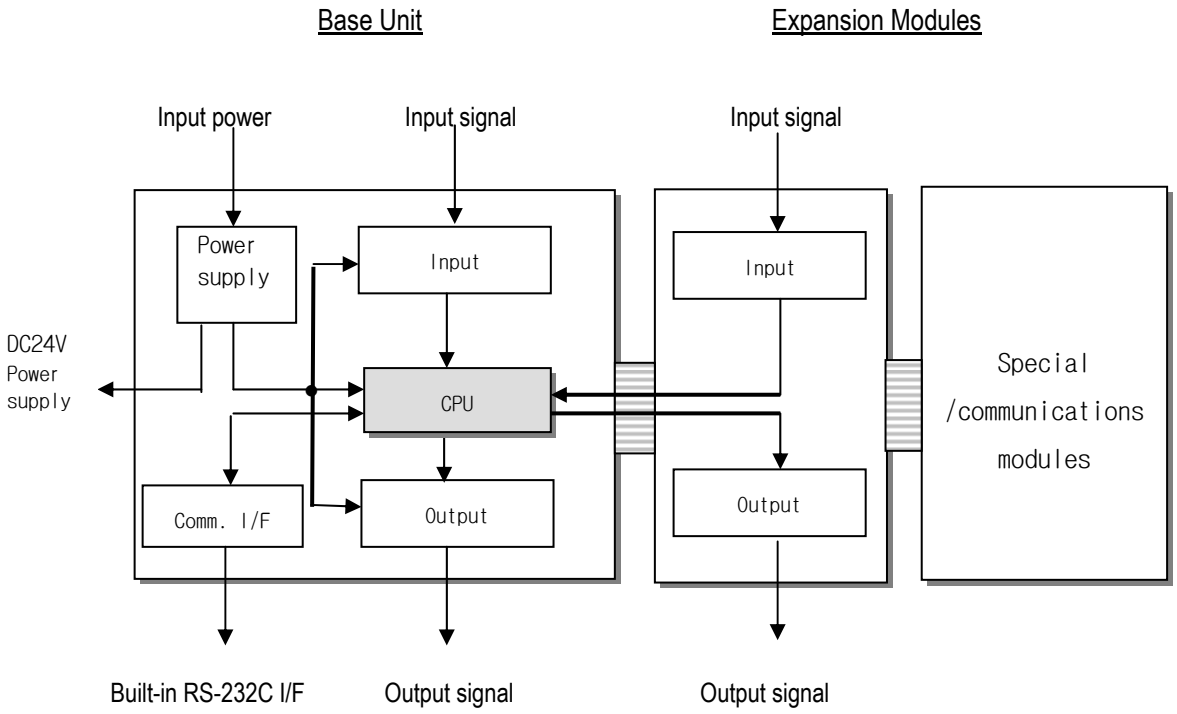

Sub-system	Description
CPU	• Signal processing function · Operating system function · Application program storage / memory function · Data storage / memory function · Application program execution function
Input	• The input signals obtained from the machine/process to appropriate signal levels for processing
Output	• The output signals obtained from the signal processing function to appropriate signal levels to drive actuators and/or displays
Power Supply	• Provides for conversion and isolation of the PLC system power from the main supply
Communications Interface	• Provides the data exchange with other systems, such as KGLWIN, computers

2.2.2 K80S Series System Equipment

Section	Items	Models	Description	Remark
Basic	Base Unit	K7M-DR10S K7M-DR10S/DC K7M-DT10S	• I/O Points - 6 DC inputs / 4 relay outputs (K7M-DR10S, K7M-DR10S/DC) - 6 DC inputs / 4 TR outputs (K7M-DT10S) • Program capacity : 48 kbytes • Built-in function -High-speed counter : Phase1 16 kHz, phase2 8 kHz 1channel -pulse output : 1 × 2 kHz -pulse catch : pulse width 0.2ms, 4 points -external contact point interrupt: 0.4ms, 8points -input filter: 0 ~ 15ms (all input) -PID control function -RS-232C communication, RS-485 communication	
		K7M-DR20S K7M-DR20S/DC K7M-DT20S	• I/O Points - 12 DC inputs / 8 relay outputs (K7M-DR20S, K7M-DR20S/DC) - 12 DC inputs / 8 TR outputs (K7M-DT20S) • Program capacity : 48 kbytes • Built-in function -High-speed counter : Phase1 16 kHz, phase2 8 kHz 1channel -pulse output : 1 × 2 kHz -pulse catch : pulse width 0.2ms, 4 points -external contact point interrupt: 0.4ms, 8points -input filter: 0 ~ 15ms (all input) -PID control function -RS-232C communication	
		K7M-DR30S K7M-DR30S/DC K7M-DT30S	• I/O Points - 18 DC inputs / 12 relay outputs (K7M-DR30S, K7M-DR30S/DC) - 18 DC inputs / 12 TR outputs (K7M-DT30S) • Program capacity : 48 kbytes • Built-in function -High-speed counter : Phase1 16 kHz, phase2 8 kHz 1channel -pulse output : 1 × 2 kHz -pulse catch : pulse width 0.2ms, 4 points -external contact point interrupt: 0.4ms, 8points -input filter: 0 ~ 15ms (all input) -PID control function -RS-232C communication	

Section	Items	Models	Description	Remark
Basic	Base Unit	K7M-DR40S K7M-DR40S/DC K7M-DT40S	• I/O Points - 24 DC inputs / 16 relay outputs (K7M-DR40S, K7M-DR40S/DC) - 24 DC inputs / 16 TR outputs (K7M-DT40S) • Program capacity : 48 kbytes • Built-in function -High-speed counter : Phase1 16 kHz, phase2 8 kHz 1channel -pulse output : 1 × 2 kHz -pulse catch : pulse width 0.2ms, 4 points -external contact point interrupt: 0.4ms, 8points -input filter: 0 ~ 15ms (all input) -PID control function -RS-232C communication	
		K7M-DR60S K7M-DR60S/DC K7M-DT60S	• I/O Points - 36 DC inputs / 24 relay outputs (K7M-DR60S, K7M-DR60S/DC) - 36 DC inputs / 24 TR outputs (K7M-DT60S) • Program capacity : 48 kbytes • Built-in function -High-speed counter : Phase1 16 kHz, phase2 8 kHz 1channel -pulse output : 1 × 2 kHz -pulse catch : pulse width 0.2ms, 4 points -external contact point interrupt: 0.4ms, 8points -input filter: 0 ~ 15ms (all input) -PID control function -RS-232C communication	
Expansion module	Digital I/O module	G7E-DR10A	• I/O points -6 DC inputs / 4 relay outputs	
	A/D-D/A Composite module	G7F-ADHA	• A/D : 2 channel , D/A : 1 channel	
	A/D conversion module	G7F-AD2A	• A/D : 4 channel	
	Analog timer module	G7F-AT2A	• Points : 4points • Digital output range : 0~200	
	Communication I/F module	G7L-CUEB	• RS-232C : 1 channel	
		G7L-CUEC	• RS-422 : 1 channel	
		G7L-DBEA	• DeviceNet I/F module	
		G7L-FUEA	• FieldBus I/F module	
		G7L-PBEA	• Profibus I/F module	

Chapter 3. General Specifications

3.1 General specifications

The following shows the general specifications of the MASTER-K series.

No.	Item	Specifications					References
1	Operating ambient Temperature	0 ~ 55 °C					
2	Storage ambient Temperature	–25 ~ +70 °C					
3	Operating ambient Humidity	5 ~ 95%RH, non-condensing					
4	Storage ambient Humidity	5 ~ 95%RH, non-condensing					
5	Vibrations	Occasional vibration				-	
		Frequency	Acceleration	Amplitude		Sweep count	IEC 61131-2
		10 ≤ f < 57Hz	–	0.075mm		10 times for each X, Y, Z axis	
		57 ≤ f ≤ 150Hz	9.8m/s² {1G}	–			
		Continuous vibration					
		Frequency	Acceleration	Amplitude			
		10 ≤ f < 57Hz	–	0.035mm			
		57 ≤ f ≤ 150Hz	4.9m/s² {0.5G}	–			
6	Shocks	• Maximum shock acceleration: 147 m/s² {15G} • Duration time: 11ms • Pulse wave: half sine pulse (3 shocks per axis, on X, Y, Z axis)					IEC 61131-2
7	Noise Immunity	Square wave Impulse noise	± 1,500 V				LGIS' Internal Standard
		Electronic discharge	Voltage: 4 kV (Discharge by contact)				IEC 61131-2, IEC 1000-4-2
		Radiated electromagnetic field noise	27 ~ 500 MHz, 10 V/m				IEC 61131-2, IEC 1000-4-3
		Fast transient & burst noise	Item	Power supply	Digital I/O (>24V)	Digital I/O (<24V) Analog I/O Interface	IEC 61131-2 IEC 1000-4-4
			Voltage	2kV	1kV	0.25kV	
8	Atmosphere	Free of corrosive gases and excessive dust					IEC61131-2
9	Altitude	Up to 2,000m					
10	Pollution degree	2					
11	Cooling method	Air-cooling					

REMARK

1) IEC (International Electrotechnical Commission): An international civilian institute who establishes international standards in area of electric and electronics.
2) Pollution degree: An indicator, which indicates pollution degree, which determine insulation performance of equipment.
Pollution degree 2 : Normally, only non-conductive pollution occurs. Occasionally, however, a temporary conductivity caused by condensation shall be expected.

Chapter 4. Names of Parts

4.1 Base Unit

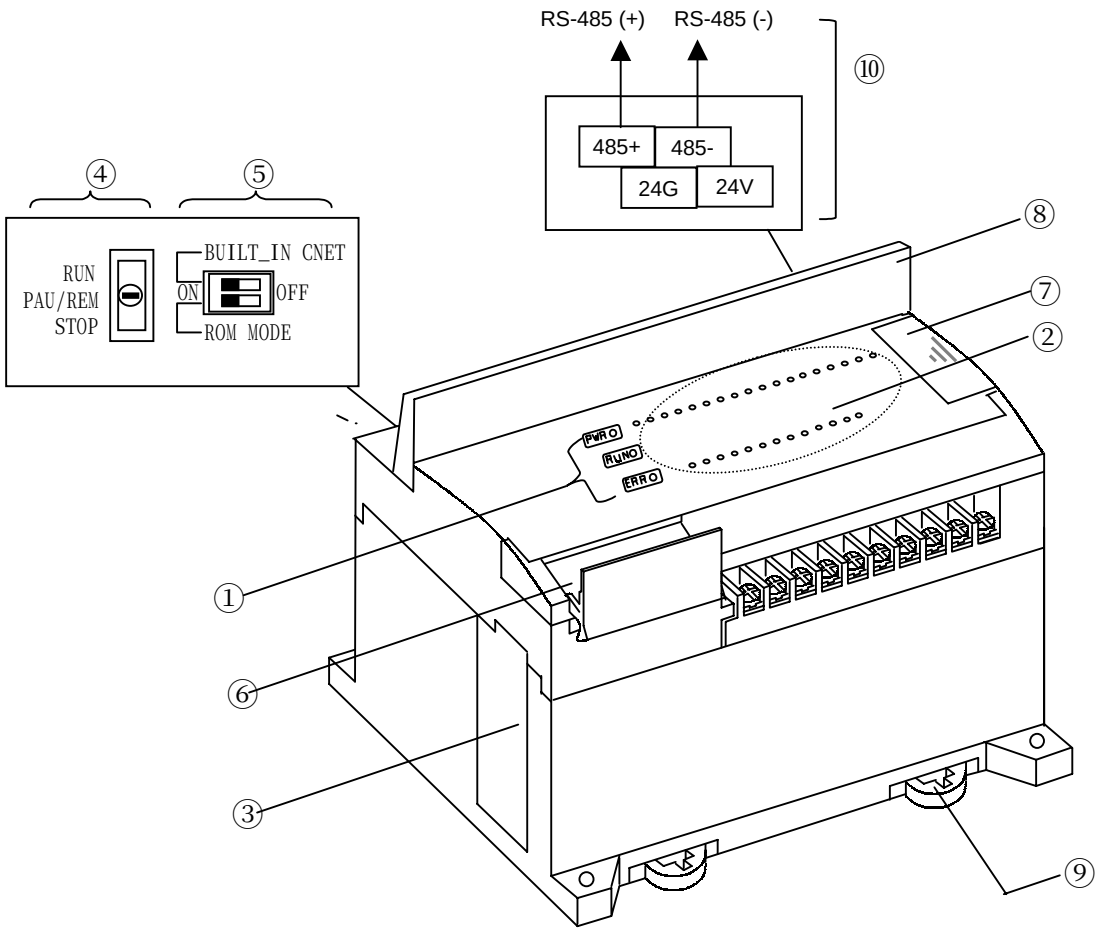

No	Name		
1	CPU Condition LED Indication	PWR LED	Indicates power supply to the system • On: When the supply is normal • Off: When the supply is abnormal
		RUN LED	Indicates base unit operation • On: Indicates local key switch or remote running mode • Off: with the following led gets off ▶ Without normal power supply to the base unit ▶ While key switch is stopped ▶ Detecting an error makes operation stop
		ERR LED	Indicates Base Units operation • On/Off of led: self-inspected error • Off: CPU is normally working.
2	I/O LED		Indicates I/O operating status
3	Folder for battery installation		Folder for back-up battery installation

No	Name	
4	Key switch mode creation	Indicates base units drive mode • RUN: Indicates program operation • STOP: Stopped program operation • PAU / REM: usage of each modules are as follows: ▶ PAUSE : temporary stopping program operation ▶ REMOTE : Indicates remote drive
5	Dip-switch memory operation	See Chapter 5
6	RS-232C connector	9-pin DIN connector to connect with external devices like KGLWIN
7	Expansion connector cover	Connector cover to connect with expansion unit
8	Terminal block cover	Protection cover for wiring of terminal block
9	Private hook DIN rail	Private part hook for DIN rail
10	RS-485 communication terminal	Only available with 10 points modules (K7M-DR10S, K7M-DR10S/DC, K7M-DT10S)

4.1.1 10-point base unit

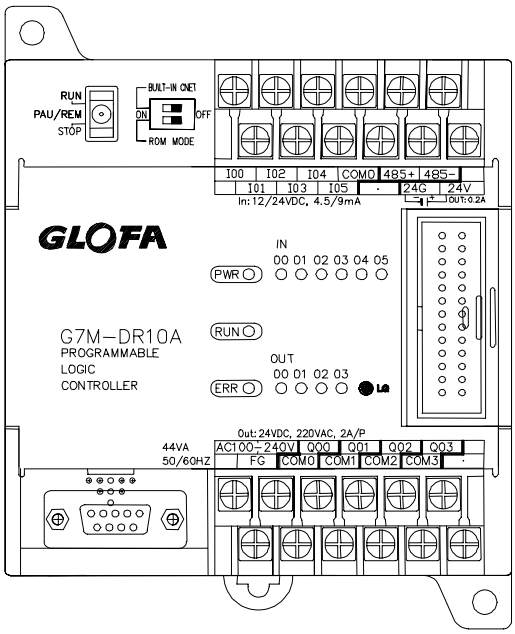

4.1.2 20-point base unit

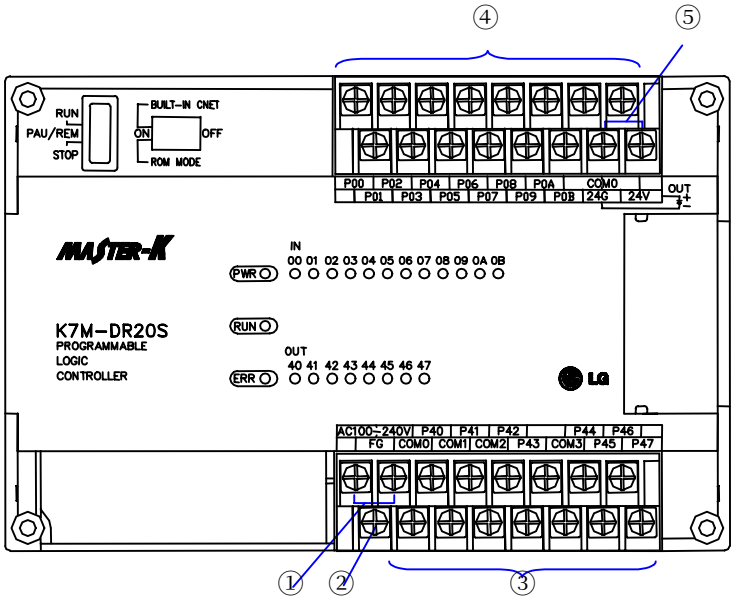

No.	Name	Usage
1	Terminal block for power supply	Terminal blocks for power supply (AC 100V ~ 240V)
2	FG circuit	Frame ground
3	Output terminal	Output connecting terminal
4	Input terminal	Output connecting terminal
5	DC24V, 24G output terminal	Service power supply for DC 24V needed place

4.1.3 30-points base unit

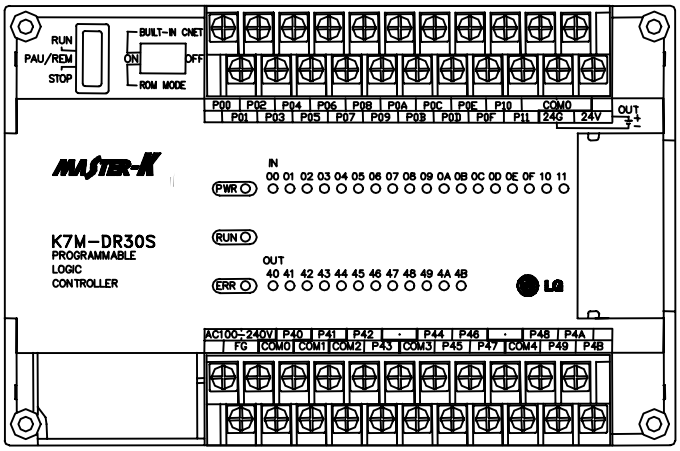

4.1.4 40-points base unit

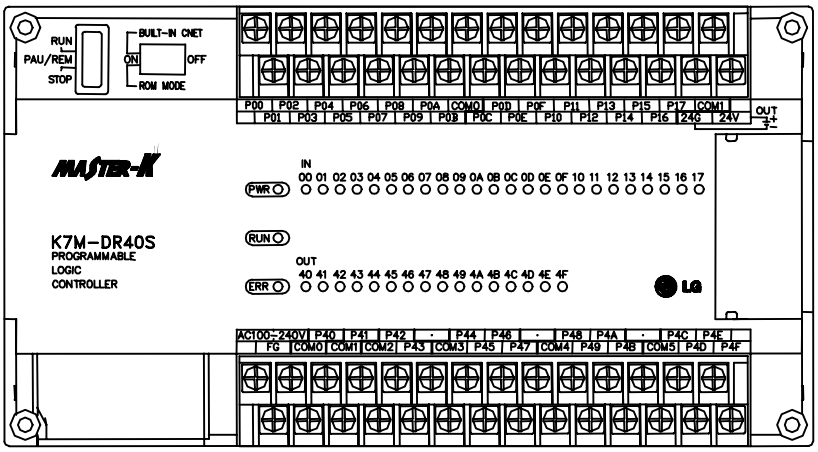

4.1.5 60-points base unit

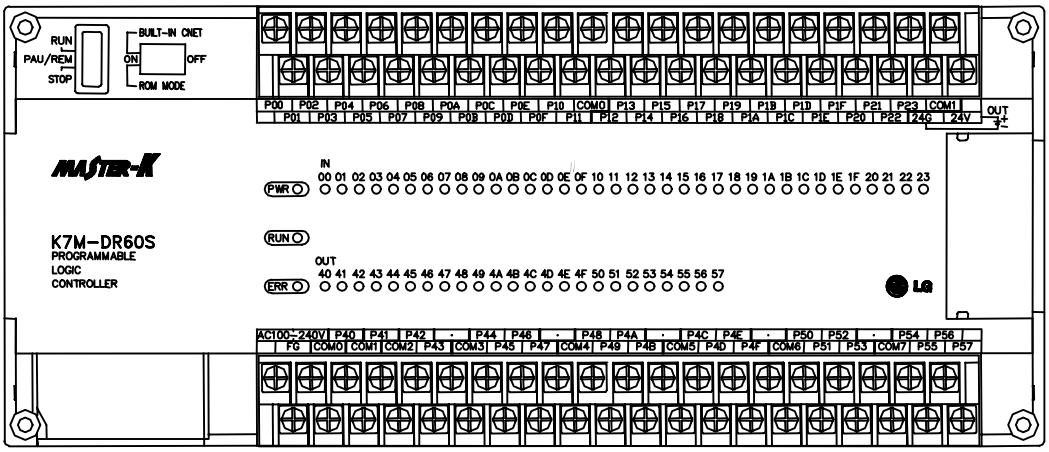

4.2 Expansion Module

4.2.1 Digital I/O Module

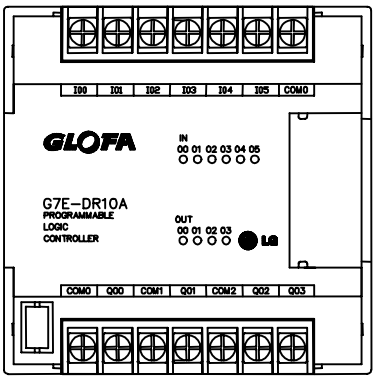

4.2.2 A/D · D/A Combination Module

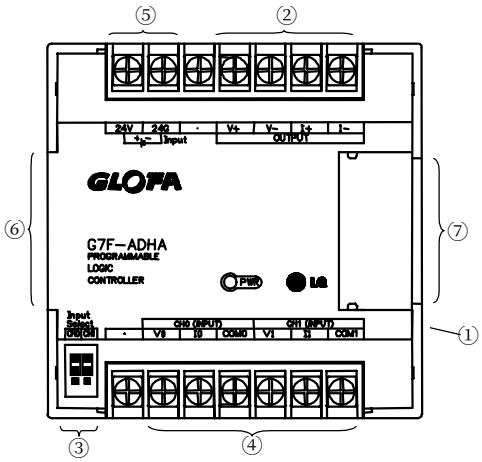

No.	Names
①	RUN LED
②	Analog Input Terminal
③	Analog Input (Voltage/current) selecting jumper pin
④	Analog Output Terminal
⑤	External Power Supply Terminal (DC24V)
⑥	Expansion Cable
⑦	Expansion Cable Connecting Terminal

4.2.3 Analog Timer Module

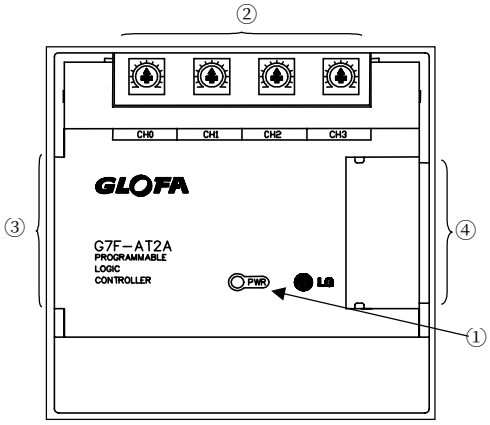

No.	Names
①	RUN LED
②	Analog Timer Volume Control Resistance
③	Expansion Cable
④	Expansion Cable Connecting Terminal

4.2.4 Option Modules

Option modules are attached the expansion slot of main unit or expansion unit, and supplies optional functions such as memory expansion or real time clock. K80S series have two option modules – external memory module and RTC module.

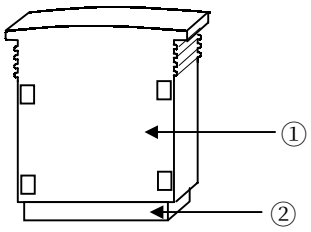

No.	Names
①	Option module
②	Connector

Chapter 5. CPU

5.1 Specifications

The following table shows the general specifications of the MASTER-K80S series

Item		Specifications					Remarks
		K7M-DR10S	K7M-DR20S	K7M-DR30S	K7M-DR40S	K7M-DR60S	
		K7M-DR10S/DC	K7M-DR20S/DC	K7M-DR30S/DC	K7M-DR40S/DC	K7M-DR60S/DC	
		K7M-DT10S	K7M-DT20S	K7M-DT30S	K7M-DT40S	K7M-DT60S	
Program control method		Cycle execution of stored program, Time-driven interrupt, Process-driven interrupt					
I/O control method		Indirect mode (Refresh method), Direct by program command					
Program language		Mnemonic, Ladder diagram					
Numbers of instructions		Basic : 30, Application : 218					
Processing speed		0.5μsec/step					
Program capacity		7ksteps					
I/O points		10	20	30	40	60	
Memory device	P	P0000 ~ P015F					I/O relay
	M	M000 ~ M191F (3,072points)					Auxiliary relay
	K	K000 ~ K31F (512 points)					Keep relay
	L	L000 ~ L63F (1,024 points)					Link relay
	F	F000 ~ F63F (1,024 points)					Special relay
	T	100msec : T000 ~ T191 (192 points) 10msec : T192 ~ T255 (64 points)					Timer
	C	C000 ~ C255 (256 points)					Counter
	S	S00.00 ~ S99.99 (100×100 steps)					Step controller
	D	D0000 ~ D4999 (5,000 words)					Data register
Operation modes		RUN, STOP, PAUSE, DEBUG					
Self-diagnosis functions		Detect errors of scan time, memory, I/O, battery, and power supply					
Data back-up method		Battery-back-up					
Max. expansion level		Up to 3 level					

Item			Specifications	Remarks
Internal Function	PID control function		Function block control, auto tuning, forced output, adjustable operation scan time, forward/reverse operation control	
	Cnet I/F Function		Master-K exclusive protocol support MODBUS protocol support User's protocol support	Common use with KGLWIN port
	High-speed counter	Capacity	1 phase : 16 kHz, 1 channel 2 phase : 8 kHz,1 channel	
		Counter function	It has 3diffferant counter function as following; 1 phase, up/down by program 1 phase, up/down by B phase input 2 phase, up/down by phase difference	
		Multiplication function	Multiplication : 1, 2, or 4 (adjustable)	
		Data comparison function	Execute a task program when the elapsed counter value reaches to the preset value	
	Pulse catch		Minimum pulse width : 0.2msec, 8 points	
	Pulse output		2khz, 1point	Transistor output only
	External interrupt		8points, 0.4ms	
	Input filter		0~15ms	
Weight (g)	K7M-DR10S		370	
	K7M-DR20S		530	
	K7M-DR30S		550	
	K7M-DR40S		670	
	K7M-DR60S		845	
	K7M-DR10S/DC		370	
	K7M-DR20S/DC		530	
	K7M-DR30S/DC		550	
	K7M-DR40S/DC		670	
	K7M-DR60S/DC		845	
	K7M-DT10S		370	
	K7M-DT20S		540	
	K7M-DT30S		550	
	K7M-DT40S		670	
	K7M-DT60S		845	
	G7E-DR10A		230	

5.2 Operation Processing

5.2.1 Operation Processing Method

1) Cyclic operation

A PLC program is sequentially executed from the first step to the last step, which is called scan. This sequential processing is called cyclic operation. Cyclic operation of the PLC continues as long as conditions do not change fo r interrupt processing during program execution. This processing is classified into the following stages:

Stages	Processing
Operation Start	
Initialization	• Stage for the start of a scan processing. it is executed only o ne time when the power is applied or reset is executed. It exe cutes the following processing.. ▶ I/O reset ▶ Execution of self-diagnosis ▶ Data clear ▶ I/O address allocation or type
Input image area refresh	•Input part conditions are read and stored into the input image ar ea before start the processing of a program
Program operation processing Program starts ⋮ Program ends	•Program is sequentially executed from the first step to the last st ep Program operation processing
Output image area refresh	•The contents stored in the output image area is output to output part when operation processing of a program is finished.
END processing	•Stage for return processing after the CPU part has finished 1 sc an. The END processing following processing is executed. ~ Self-diagnosis ~ Change the present values of timer and counter, etc. ~ Processing data communications between computer link module and communications module. ~ Checking the switch for mode setting.

2) Time driven interrupt operation method

In time driven interrupt operation method, operations are processed not repeatedly but at every pre-set interval. Interval, in the MK80S series, can be set to between 0.001 to 6 sec. This operation is used to process operation with a constant cycle.

3) Event driven interrupt operation method

If a situation occurs which is requested to be urgently processed during execution of a PLC program, this operation method processes immediately the operation, which corresponds to interrupt program. The signal, which informs the CPU of those urgent conditions is called interrupt signal. The MK80S CPU has two kind of interrupt operation methods, which are internal and external interrupt signal methods.

5.2.2 Operation processing at momentary power failure occurrence

The CPU detects any momentary power failure when the input line voltage to the power supply falls down below the defined value. When the CPU detects any momentary power failure, the following operations will be executed:

1) Momentary power failure within 20 ms

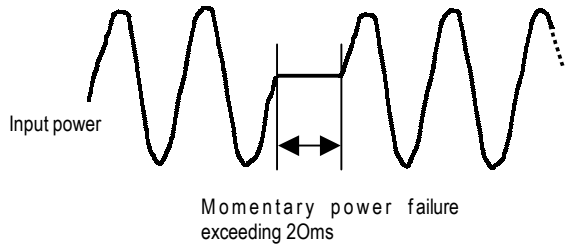

(1) The operation processing is stopped with the output retained.

(2) The operation processing is resumed when normal status is restored.

(3) The output voltage of the power supply retains the defined value.

(4) The watchdog timer (WDT) keeps timing and interrupt timing normally while the operations is at a stop.

2) Momentary power failure exceeding 20 ms

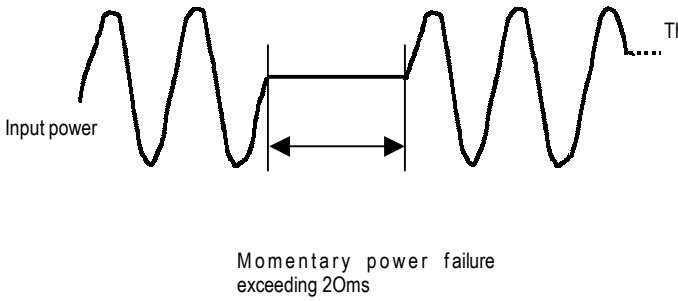

The re-start processing is executed as the power is applied.

REMARK

1) Momentary power failure

The PLC defining power failure is a state that the voltage of power has been lowered outside the allowable variation range of it. The momentary power failure is a power failure of short interval (several to tens ms).

5.2.3 Scan Time

The processing time from a 0 step to the next 0 step is called scan time.

1) Expression for scan time

Scan time is the addition value of the processing time of scan program that the user has written, of the task program processing time and the PLC internal processing time.

(1) Scan time = Scan program processing time + Interrupt program processing time + PLC internal processing time

• Scan program processing time = The processing time used to process a user program that is not specified to a ta sk program.

• Interrupt program processing time = Total of the processing times of interrupt programs executed during one scan.

• PLC internal processing time = Self-diagnosis time + I/O refresh time + Internal data processing time + Communi cations service processing time

(2) Scan time differs in accordance with the execution or non-execution of interrupt programs and communications processing, etc.

2) Flag

Scan time is stored in the following system flag area.

- F50 : Maximum scan time (unit: 1 ms)
- F51 : Minimum scan time (unit: 1 ms)
- F52 : Current scan time (unit: 1 ms)

5.2.4 Scan Watchdog Timer

1) Watchdog timer is used to detect a delay of abnormal operation of sequence program (Watchdog time is set in menu of basic parameter of KGLWIN.)
2) When watchdog timer detects an exceeding of preset watchdog time, the operation of PLC is stopped immediately and al l output is off.
3) If an exceeding of preset watchdog time is expected in sequence program, use 'WDT' instruction. 'WDT' instruction make elapsed watchdog time as zero.
4) In order to clear watchdog error, restarting the PLC or mode change to STOP mode are available.

REMARK
Setting range of watchdog : 1~ 6,000ms(unit : 10ms)

5.2.5 Timer Processing

The MASTER-K series uses up count timers. There are 5 timer instructions such as on-delay (TON), off-delay (TOFF), integral (TMR), monostable (TMON), and re-triggerable (TRTG) timer.

The measuring time range of 100msec timer is 0.1 ~ 6553.5 sec, and that of 10msec timer is 0.01 ~ 655.35 sec. Please refer the 'MASTER-K programming manual' for details.

1) On delay timer

The current value of timer starts to increase from 0 when the input condition of TON instruction turns on. When the current value reaches the preset value, the timer output relay turns on.

When the timer input condition is turned off, the current value becomes 0 and the timer output relay is turned off.

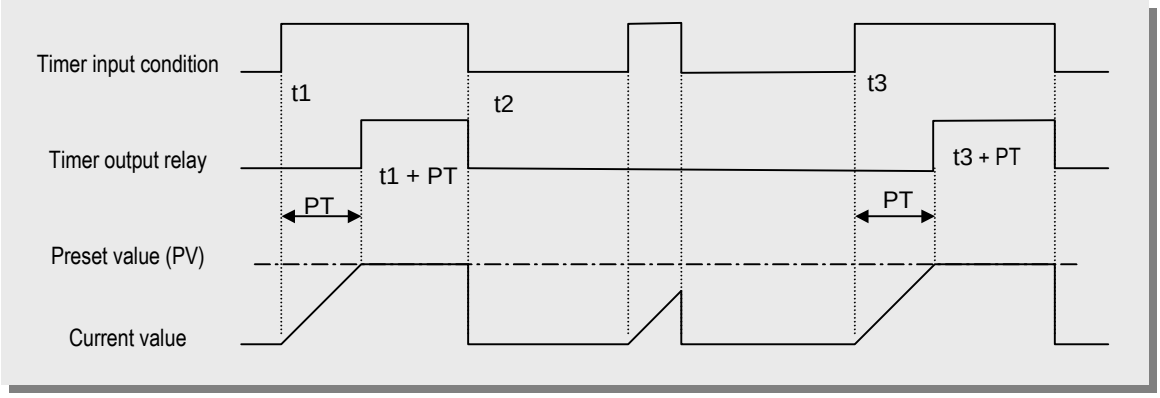

2) Off delay timer

The current value of timer set as preset value and the timer output relay is turned on when the input condition of TOFF instruction turns on. When the input condition is turned off, the current value starts to decrease. The timer output relay is turned off when the current value reaches 0.

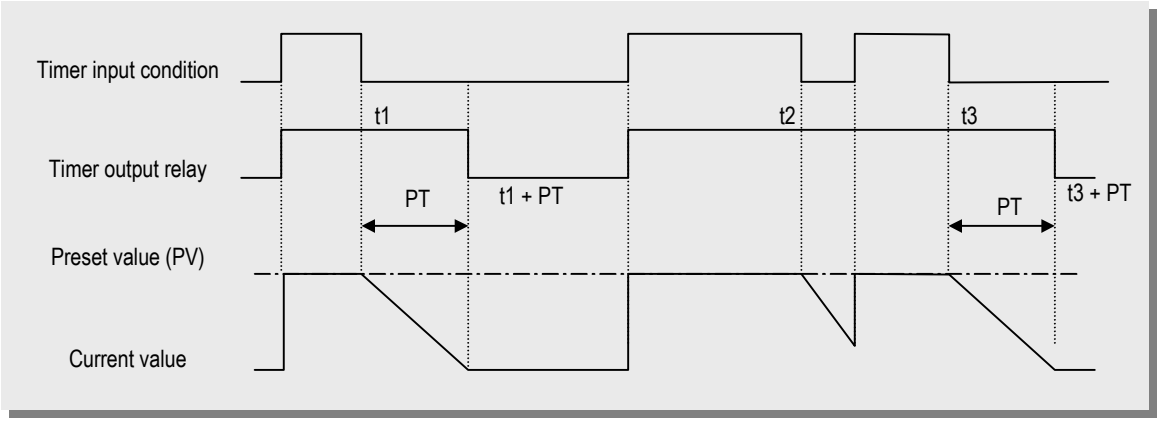

3) Integral timer

In general, its operation is same as on-delay timer. Only the difference is the current value will not be clear when the input condition of TMR instruction is turned off. It keeps the elapsed value and restart to increase when the input condition is turned on again.

When the current value reaches preset value, the timer output relay is turned on.

The current value can be cleared by the RST instruction only.

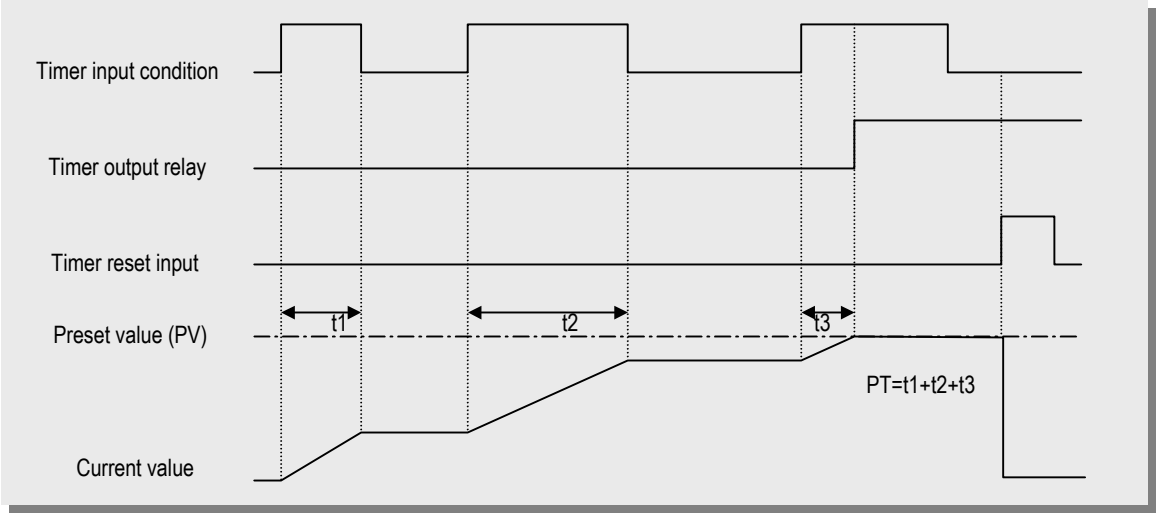

4) Monostable timer

In general, its operation is same as off-delay timer. However, the change of input condition is ignored while the timer is operating (decreasing).

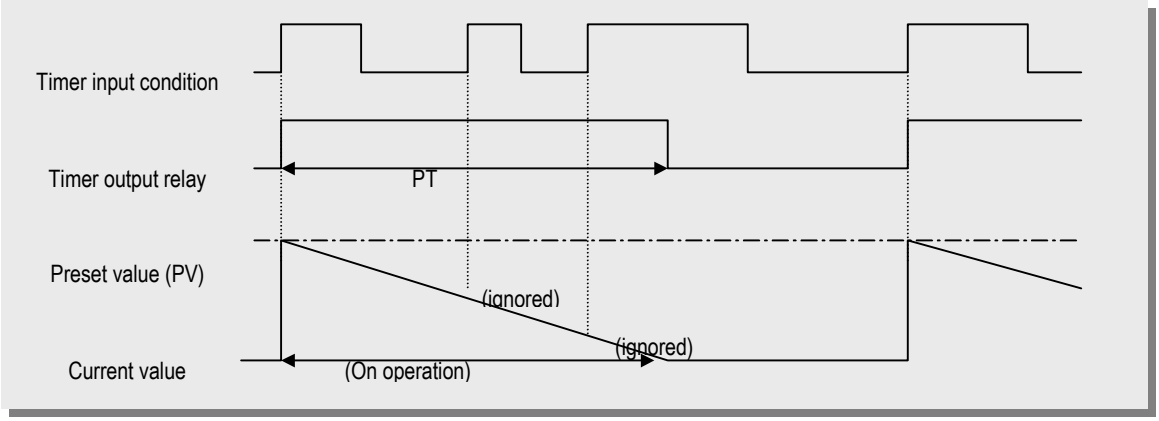

5) Retriggerable timer

The operation of retriggerable timer is same as that of monostable timer. Only difference is that the retriggerable timer is not ignore the input condition of TRTG instruction while the timer is operating (decreasing). The current value of retriggerable timer will be set as preset value whenever the input condition of TRTG instruction is turned on.

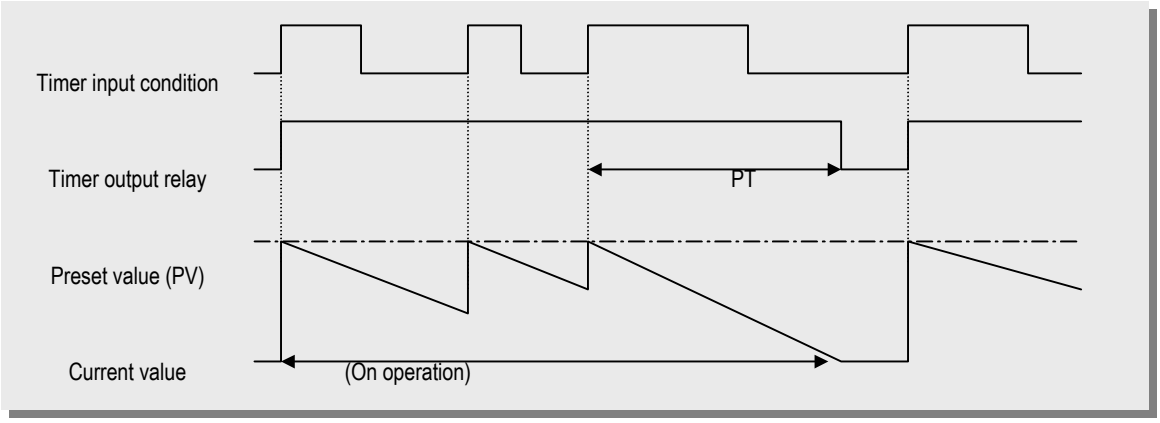

REMARK

The accuracy of timer:

The Maximum timing error of timers of MASTER-K series is + 2 scan time ~ - 1 scan time.

Refer the programming manual for details.

5.2.6 Counter Processing

The counter counts the rising edges of pulses driving its input signal and counts once only when the input signal is switched from off to on. MASTER-K series have 4 counter instructions such as CTU, CTD, CTUD, and CTR. The maximum counter setting value is hFFFF (= 65535). The followings shows brief information for counter operation.

1) Up counter (CTU)

The counter output relay is turned on when the current value reaches the preset value. After the counter relay output is turned on, the current value will increase until it reaches the maximum counting value (hFFFF = 65535).

When the reset input is turned on, the counter output relay and current value is cleared as 0.

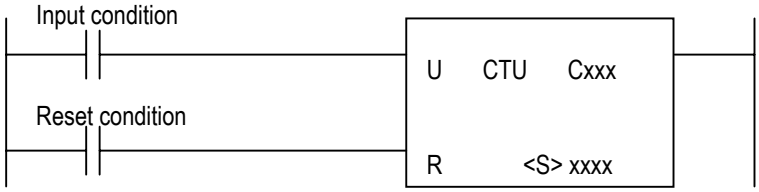

2) Down counter (CTD)

When the CPU is switched to the RUN mode, the current value is set as preset value.[1] The current value is decreased by 1 with the rising edge of counter input signal. The counter output relay is turned on when the current value reaches 0.

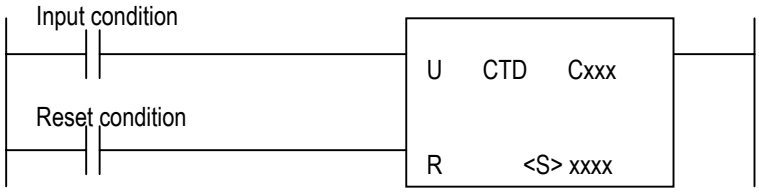

[1] If the retentive counter area is used for down counter, the reset input has to be turned on to initialize counter.

3) Up-down counter

The current value is increased with the rising edge of up-count input signal, and decreased with the rising edge of down-count input signal. The counter output relay is turned on when the current value is equal or greater than the preset value.

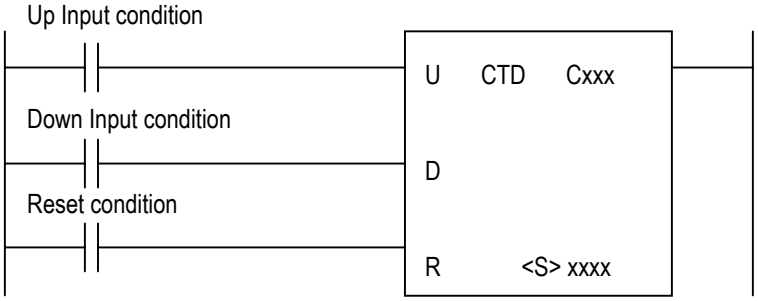

4) Ring counter

The current value is increased with the rising edge of the counter input signal, and the counter output relay is turned on when the current value reaches the preset value. Then the current value and counter output relay is cleared as 0 when the next counter input signal is applied.

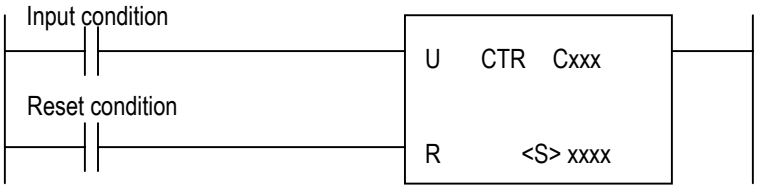

REMARK

1. Maximum counting speed

The maximum counting speed of counter is determined by the length of scan time. Counting is possible only when the on/off switching time of the counter input signal is longer than scan time.

$$\text{Maximum counting speed } (C_{max}) = \frac{n}{100} \times \frac{1}{t_s} \text{ (times/sec)}$$

n : duty (%), t_s : scan time

2. Duty

Duty is the ratio of the input signal's on time to off time as a percentage.

If $T1 \le T2$, $n = \frac{T1}{T1+T2} \times 100\ (\%)$

If $T1 > T2$, $n = \frac{T2}{T1+T2} \times 100\ (\%)$

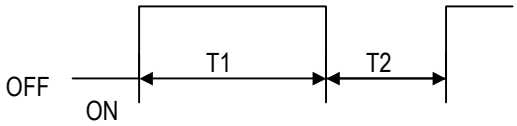

5.3 Program

5.3.1 Classification of program

All functional elements need to execute a certain control process are called as a 'program'. In MASTER-K series, a program is stored in the RAM mounted on a CPU module or flash memory of a external memory module. The following table shows the classification of the program.

Program type	Description
Scan program	The scan program is executed regularly in every scan. If the scan program is not stored, the CPU cannot execute not only the scan program but also other programs.
Time-driven interrupt program (TDI)	The TDI programs are executed with a constant time interval specified with parameter setting.
Process driven interrupt program (PDI)	The PDI programs are executed only external interrupt input is applied and the corresponding interrupt routine is enabled by EI instruction.
Subroutine program	The subroutine programs are executed when they are called by the scan program with a CALL instruction.

5.3.2 Processing method

The following diagram shows that how the CPU module process programs when the CPU module is powered on or switched to RUN mode.

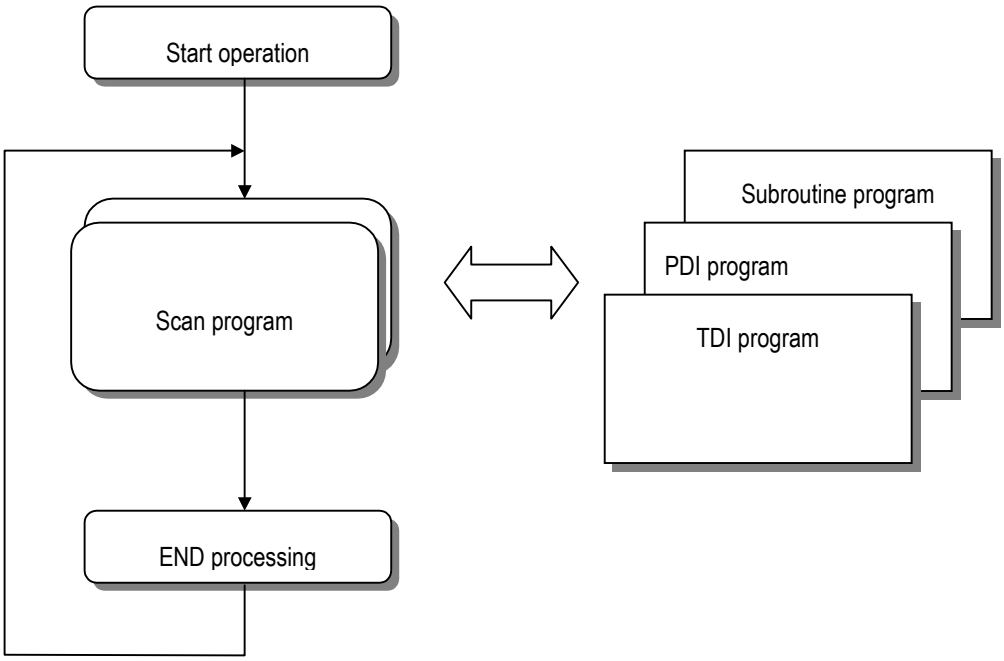

5.3.3 Interrupt function

When an interrupt occurs, the CPU module will stop the current operation and execute the corresponding interrupt routine. After finish the interrupt routine, the CPU resume the sequence program from the stopped step.
MASTER-K series provides 2 types of interrupt. The TDI (Time driven interrupt) occurs with the constant period, and PDI (Process driven interrupt) occurs with the status of external input.

Before to use interrupt function in sequence program, the parameter setting should be done properly. Then the corresponding interrupt routine should be written after END instruction. (Refer chapter 4 for details) If interrupt routines are not matched with parameter settings, an error occurs and the operation of CPU will be stopped.

To execute an interrupt routine, use the EI instruction to enable the corresponding interrupt. The interrupt routine is not executed if an interrupt factor occurs before execution of an EI instruction. Once an interrupt is enabled with EI instruction, it keeps the enabled status until DI instruction is executed to disable the interrupt. When a CPU is turned to RUN mode, all interrupts are disabled by default.

When multiple interrupt factors occur simultaneously, interrupt routines are executed according to the priority given to the each interrupt. If an interrupt factor that has higher priority occurs while other interrupt that has lower priority are executing, the interrupt routine of lower priority will be stopped and the interrupt of higher priority will be executed first. The following figure shows how a CPU handles multiple interrupts.

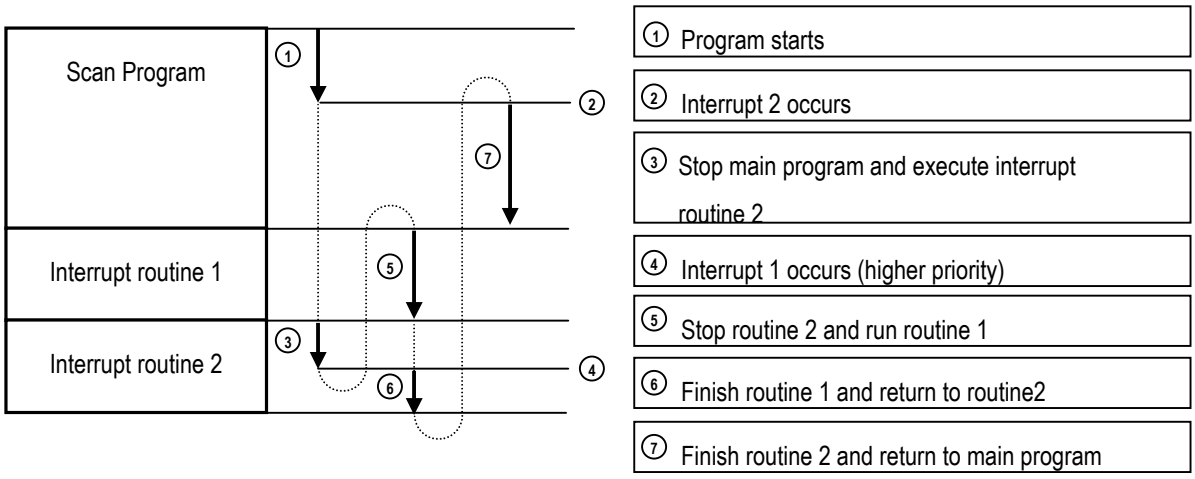

1) parameter setting

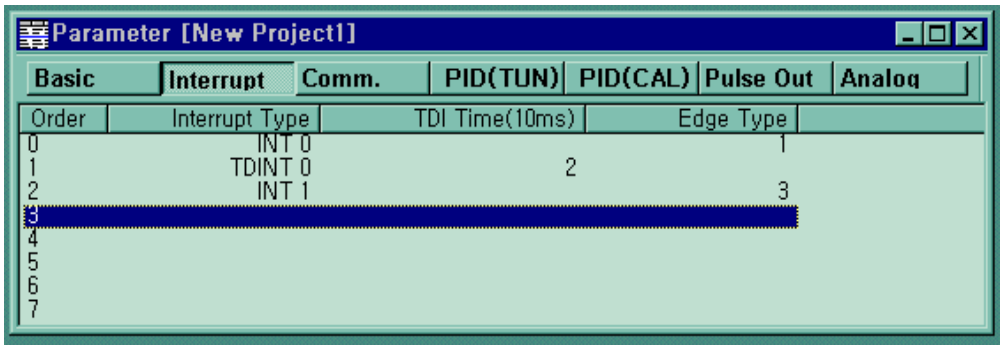

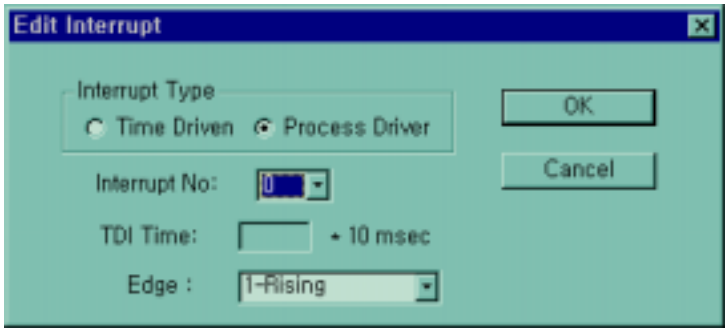

2) Time driven interrupt

TDI occurs periodically with the constant interval assigned in parameter setting. The interrupt routine of TDI starts with the TDINT instruction and ends with the IRET instruction.

When multiple interrupt factors occur simultaneously, interrupt routines are executed according to the priority given to the each interrupt. If an interrupt factor has higher priority occurs while other interrupt of lower priority is executing, the interrupt routine of lower priority will be stopped and the interrupt of higher priority will be executed first. Otherwise, two interrupts are executed consequently.

3) Process driven interrupt

Available PDI is P000 ~ P007 (8 points) assigned in parameter setting.
PDI occurs when the input status of P000 ~ P007 is changed from Off to On or from On to Off.

REMARK

Total available interrupt points

Time driven interrupt + process driven interrupt ≤ 8 points

Interrupt signal is ignored when self-interrupt occurs more than 2 times during interrupt processing is executing.

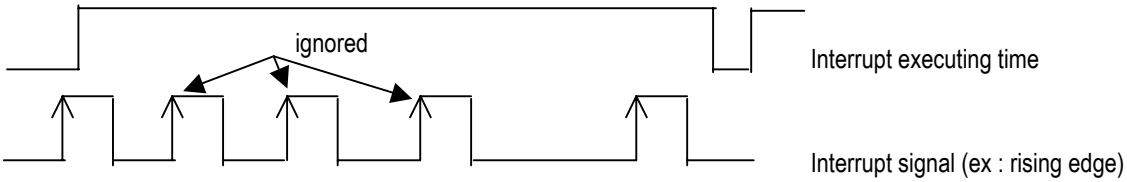

5.3.4 Error Handling

1) Error Classification

Errors occur due to various causes such as PLC system defect, system configuration fault or abnormal operation result. Errors are classified into fatal error mode, which stops system operation for system stability, and ordinary error mode, which continues system operation with informing the user of its error warning.

The main factors that occurs the PLC system error are given as followings.

- PLC hardware defect
- System configuration error
- Operation error during execution of the user programs
- External device malfunction

2) Operation mode at error occurrence

In case of error occurrence, the PLC system write the error contents the corresponding flags and stops or continues its operation complying with its operation mode.

(1) PLC hardware defect

The system enters into the STOP state if a fatal error such as the CPU module defect has occurred, and continues its operation if an ordinary error such as battery error has occurred.

(2) System configuration error

This error occurs when the PLC hardware configuration differs from the configuration defined in the K80S series. The system enters into the STOP state.

(3) Operation error during execution of the user programs

It the numeric operation error of these errors occurs during execution of the user programs, its contents are marked on the error flags and the system continues its operation. If operation time overruns the watchdog time or I/O modules loaded are not normally controlled, the system enters into the STOP state.

(4) External device malfunction

The PLC user program detects malfunctions of external devices. If a fatal error is detected the system enters into the STOP state, and if an ordinary error is detected the system continues its operation.

REMARK

1) In occurrence of a fatal error the state is to be stored in the representative system error flags, and an ordinary error in the representative system warning flags.

2) For details of flags, refer to Appendix 2. Flag List.

5.4 Operation Modes

The CPU module operates in one of the four modes - the RUN, STOP, PAUSE and DEBUG mode. The following describes the PLC operation processing in each operation mode.

5.4.1 RUN mode

In this mode, programs are normally operated.

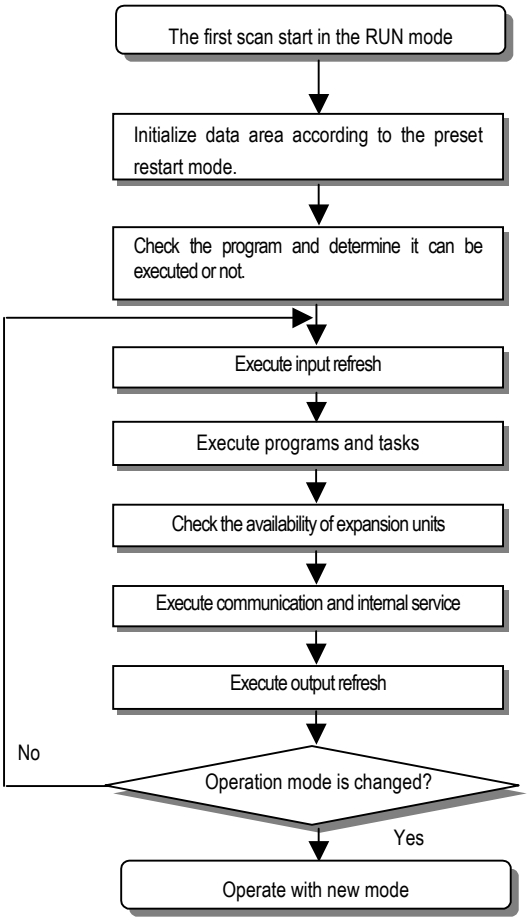

1) Processing when the operation mode changes.

Initialization of data area is executed when the first scan starts.

(1) If the PLC is in the RUN mode when applying the power:

(2) If the operation mode has been changed into from the STOP mode into the RUN mode : the initialization is executed complying with the restart mode set. (cold / warm / hot)

(3) The possibility of execution of the program is decided with check on its effectiveness.

2) Operation processing contents

I/O refreshes and program operation are executed.

(1) Interrupt programs are executed with the detection of their start-up conditions.

(2) Normal or abnormal operation and mounting conditions of the loaded module are checked.

(3) Communications service or other internal operations are processed.

5.4.2 STOP mode

In this mode, programs are not operated.

1) Processing when the operation mode changes.

The output image area is cleared and output refresh is executed.

2) Operation processing contents

(1) I/O refresh is executed.

(2) Normal or abnormal operation and mounting conditions of the loaded module are checked.

(3) Communications service or other internal operations are processed.

5.4.3 PAUSE mode

In this mode, the program operation is temporarily stopped. If it returns to the RUN mode, the operation continues from the state before the stop.

1) Processing when the operation mode changes

Data area and input image are not cleared and the operating conditions just before the mode change is maint ain.

2) Operation processing contents

(1) I/O refresh is executed.

(2) Normal or abnormal operation and mounting conditions of the loaded module are checked.

(3) Communications service or other internal operations are processed.

5.4.4 DEBUG mode

In this mode, errors of a program are searched and the operation sequence is traced. Changing into this mode is only possible in the STOP mode. In this mode, a program can be checked with examination on its execution sta te and contents of each data.

1) Processing when the operation mode changes

(1) Data area is initialized at the starting time of the mode change complying with the restart mode, which has been set on

the parameters.

(2) The output image area is cleared and output refresh is executed.

2) Operation processing contents

(1) I/O refresh is executed by one time every scan.

(2) Communications service or other internal operations are processed.

3) Debug operation conditions

• Two or more of the following four operation conditions can be simultaneously specified.

Operation conditions	Description
Executed by the one (step operation)	Executes just an operation unit (one step)
Executed to the specified breakpoint.	Executes user program until the specified step (break point)
Executed according to the device status	Execute user program until a device (bit or word) assigned is changed to the specified status
Executed by the specified scan numbe r.	Execute user program for specified number of scans

4) Operation method

(1) Execute the operation after the debug operation conditions have been set in the KGLWIN.

(2) In interrupt programs, each task can be specified to operation enable/disable.(For detailed operation method, refer to

the KGL WIN User's Manual Chapter 9.'Debugging'

5.4.5 Operation mode change

1) Operation mode change methods

The following method is used to change the operation mode.

(1) Change by the mode-setting switch of CPU module.

(2) Change by the KGLWIN connected with the CPU module communications port.

(3) Change by the KGLWIN connected to the remote CPU module through Cnet

(4) Change by the STOP instruction, during program execution.

2) Operation mode change by the mode-setting switch of CPU module

The following shows the operation mode change by the mode-setting switch of CPU module.

Mode setting switch position	Operation mode
RUN	Local RUN
STOP	Local STOP
STOP → PAU / REM	Remote STOP
PAU / REM → RUN ∗ 1	Local RUN
RUN → PAU / REM * 2	Local PAUSE
PAU / REM → STOP	Local STOP

REMARK

1) ∗ 1: If the operation mode changes from RUN mode to local RUN mode by the mode setting switch, th e PLC operates continuously without stopping.

3) Remote operation mode change

Remote operation mode change is available only when the operation mode is set to the remote STOP mo de (i.e., the mode setting switch position is in the STOP→ PAU/REM').

Mode setting switch position	Mode Change	Mode change by the KGLWIN	Mode change using FAM or computer link, etc.
PAU / REM	Remote STOP → Remote RUN	○	○
	Remote STOP → Remote PAUSE	X	X
	Remote STOP → DEBUG	○	○
	Remote RUN → Remote PAUSE	○	○
	Remote RUN → Remote STOP	○	○
	Remote RUN → DEBUG	X	X
	Remote PAUSE → Remote RUN	○	○
	Remote PAUSE → Remote STOP	○	○
	Remote PAUSE → Remote DEBUG	X	X
	DEBUG → Remote STOP	○	○
	DEBUG → Remote RUN	X	X
	DEBUG → Remote PAUSE	X	X

4) Remote operation mode change enable/disable

It is possible to disable the mode change for system protection so that some parts of the operation mode sources cannot change the mode. If remote operation mode change has been disabled, the operation mode change is possible only by the mode setting switch and KGLWIN. To enable the remote operation change, set the parameter 'Enabling the PLC control by communications' to enable. (For details, refer to the Append ix 1. System Definitions)

5.5 Functions

5.5.1 Self-diagnosis

1) Functions

(1) The self-diagnosis function permits the CPU module to detect its own errors.

(2) Self-diagnosis is carried out when the PLC power supply is turned on and when an error occurs the PLC i s in the RUN

state. If an error is detected, the system stops operation to prevent faulty PLC operation.

2) WDT (Watch dog timer) function

The watch dog timer is an internal timer of a PLC to detect the error of hardware and a sequence program. The default value is set as 200msec, and it is changeable with parameter setting. Refer the MASTER-K programming manual for details on the parameter setting.

The CPU resets the watch dog timer before step 0 is executed (after the END processing is finished). When the END instruction has not been executed within the set value due to an error occurred in the PLC or the long scan time of a sequence program, the watch dog timer will times out. When a watch dog timer error is occurred, all outputs of the PLC are turned OFF, and the ERR LED of the CPU will flashes. (RUN LED will be turned OFF) Therefore, when use FOR ~ NEXT or CALL instruction, insert WDT instruction to reset the watch dog timer.

3) Battery check function

When the voltage of the battery for back-up the memory IC of CPU are lower than the minimum back-up voltage, the BAT LED of CPU module will be turned on.

5.5.2 I/O Force On/Off function

It is possible to input/output a designated data regardless of the result of program operation. This function is useful to check operation of the input/output modules and wiring between the output modules and external devices.

1) Force On/Off setting method.

Force on/off setting is applied to input area and output area.

Force on/off should be set for each input and output, the setting operates from the time that Force I/O setting enable' is set.

This setting can be done when I/O modules are not really loaded.

Select the 'set forced I/O' from KGLWIN

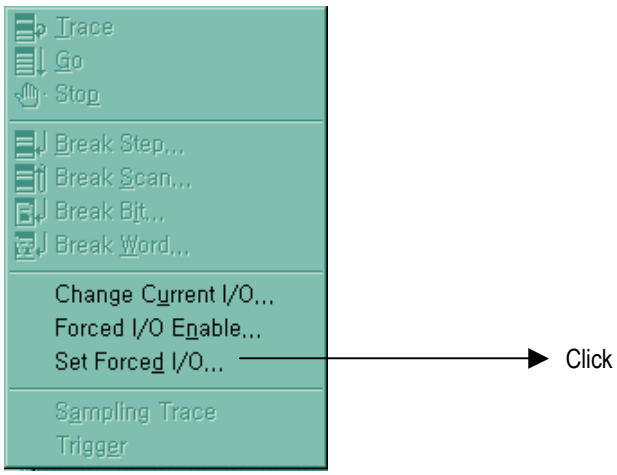

Select the I/O area and then double click.

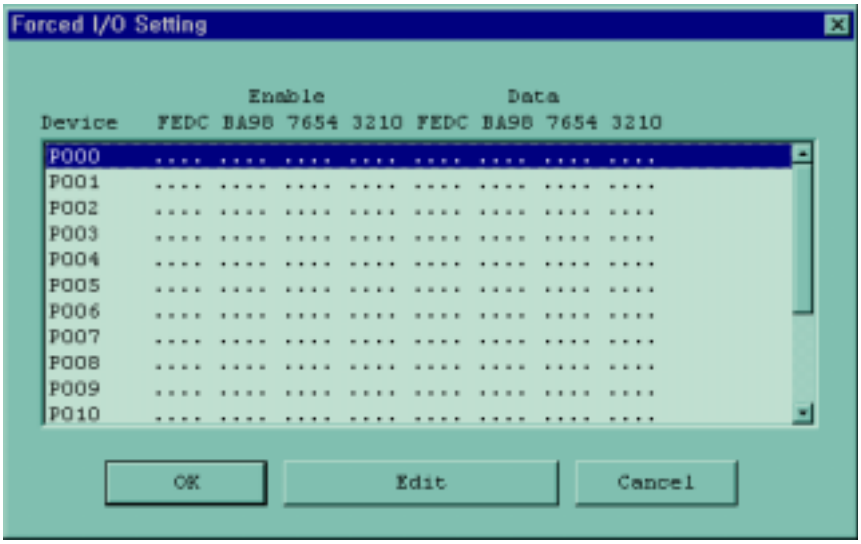

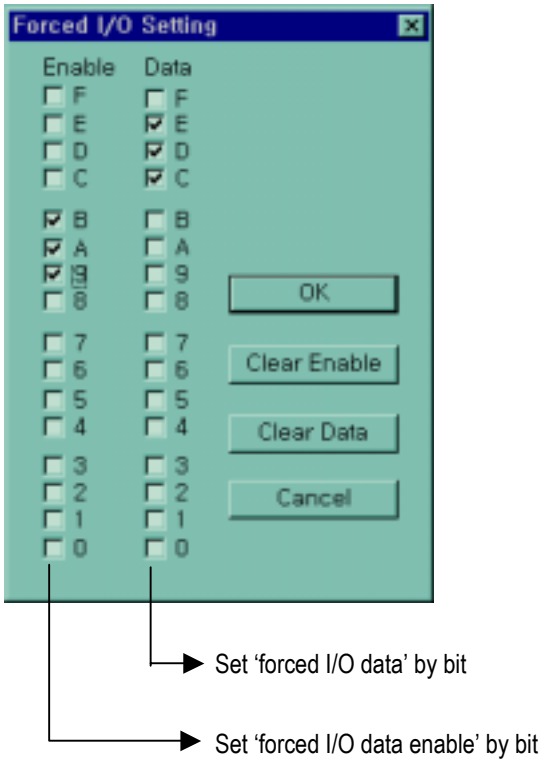

When forced I/O set enables, forced I/O function is executing.

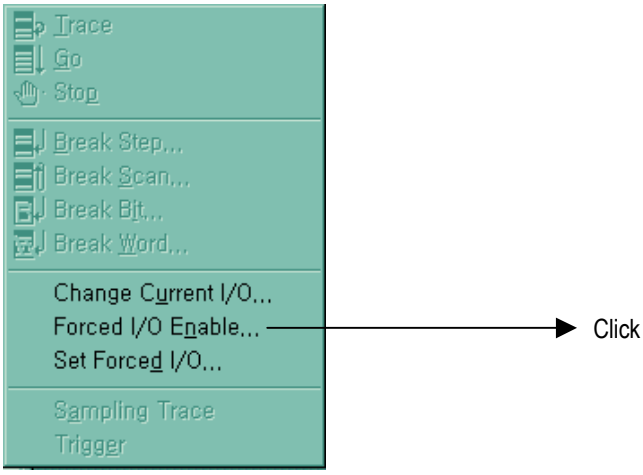

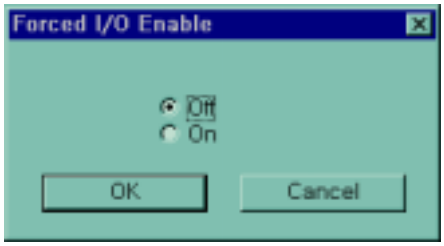

2) Special data register for forced I/O set

The contents of forced I/O setting is registered to special data register as below.

It is possible to use 'forced I/O function' to program.

Item	Special Device
All Forced I/O enable	M1910
Forced I/O enable by bit	D4700 ~ D4731
Forced I/O set data	D4800 ~ D4831

3) Force on/ off Processing timing and method

(1) Force Input

- After data have been read from input modules, at the time of input refresh the data of the junctions which have been set to force on/off will be replaced with force setting data to change the input image area. And then, the user program will be executed with real input data and force setting data.

(2) Force output

- When a user program has finished its execution the output image area has the operation results. At the time of output refresh the data of the junctions which have been set to force on/off will be replaced with force setting data and the replaced data will be output. However, the force on/off setting does not change the output image area data while it changes the input image area data.

(3) Force on off processing area

- Input/output areas for force on/off setting are larger than the real I/O areas. If remote I/O is specified using this area, the force on/off function is as just available in it as in the basic I/O areas.

(4) Precautions

- Turning the power off and on, changes of the operation mode or operation by reset switch (K1000S) does not change the previous force on/off setting data. They remain within the CPU module and operation is executed with the same data.
- Force I/O data will not be cleared even in the STOP mode.
- If a program is downloaded or its backup breaks, the force on/off setting data will be cleared. The operating program in memory differs from the program in the flash memory so that if operation restarts with the program in the flash memory the on/off setting data will be also cleared.
- When setting new data, disable every I/O settings using the setting data clear' function and set the new data.

REMARK

1) For detailed operation, refer to the KGLWIN user's Manual Chapter 7 'Force I/O setting.

5.5.3 Direct I/O Operation function

This function is usefully available when an input junction state is directly read during execution of a program and used in the operation, or the operation result is directly output to an output junction.

Direct input/output is executed by use of the 'IORF' instruction. If this instruction is used, the input/output image area will be directly updated and applied to the continuing operations.

REMARK

1) For detailed operation, refer to the 'MASTER-K Manual for instruction'.

5.5.4 System error history

When the system is stopped by error occurrence, the CPU stores the error occurrence time and error code to the special data register area. The most recent 16 error occurring times and error codes are stored in the special data register.

1) Special data register for error history

	Data area	Description
Device	D4901 ~ D4904	The latest error information
	D4905 ~ D4908	The 2nd latest error information
	:	:
	D4961 ~ D4964	The 16th latest error information

2) Description of each word

	Contents	Description
D4901	h9905	Year : 99, Month : 5
D4902	h2812	Date : 28, Hour : 12
D4903	h3030	Minute : 30, Second : 30
D4904	h0001	Error code (h0001)

3) Clear error data

Use a 'data clear' function of KGLWIN or KLD-150S

5.6 Memory Configuration

The CPU module includes two types of memory that are available by the user. One is program memory, which is used to store the user programs written to implement a system by the user. The other is data memory, which sto res data during operation.

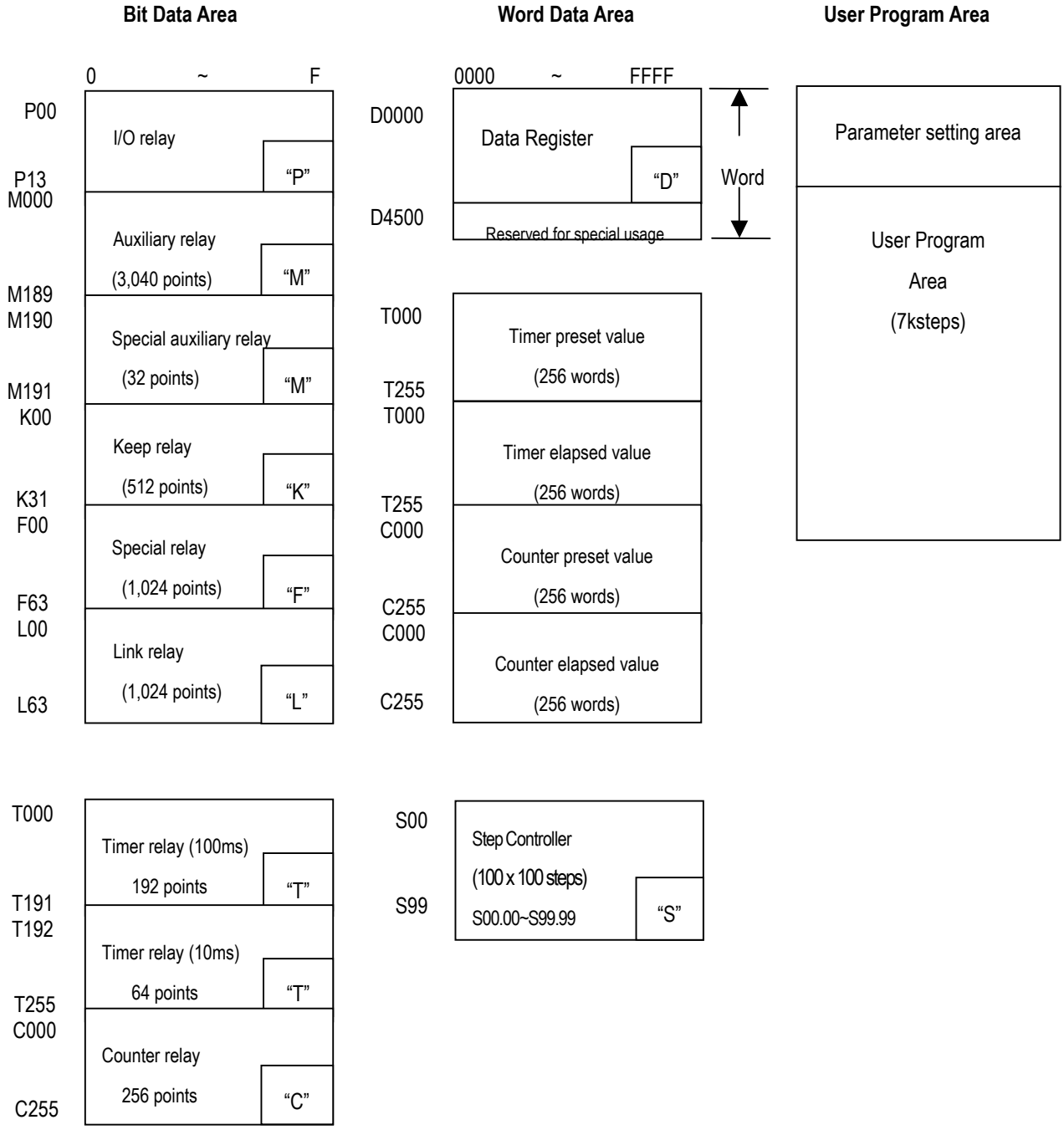

5.7 I/O No. Allocation Method

I/O No. allocation means to give an address to each module in order to read data from input modules and output data to output modules.

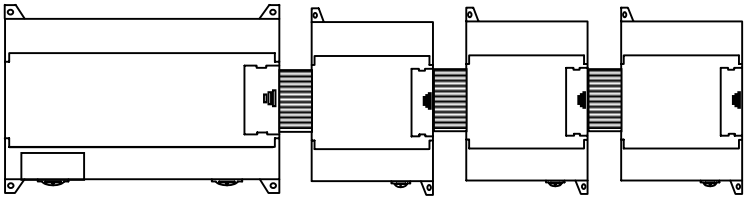

Max. 3 expansion module is available

Mounting module	No. of module can be mounted	remark
Expansion I/O module	2	
A/D conversion module	2	
Analog timer module	3	
Communication module	1	

I/O No. allocation method

module		area	remark
Main	Input	P000 ~ P03F	Fixed 64 points
	Output	P040 ~ P07F	Fixed 64 points
Expansion #1	Input	P080 ~ P08F	Fixed 16 points
	Output	P090 ~ P09F	Fixed 16 points
Expansion #2	Input	P100 ~ P10F	Fixed 16 points
	Output	P110 ~ P11F	Fixed 16 points
Expansion #3 (Special)		None	A/D,A/T,Communication

Basically I/O allocation is fixed point method.(the area which is not used can be used internal relay)

The special module is not allocated.

5.8 Built-in Flash Memory

MK80S series includes a built-in flash memory to store user program. Also, user can set the PLC automatically executes the user program of flash memory when the PLC is turned on. It is similar with the ROM operation of other PLCs, but it is different that no external memory is required.

5.8.1 Structure

You can see dip switches as shown when you open I/O terminal block cover.

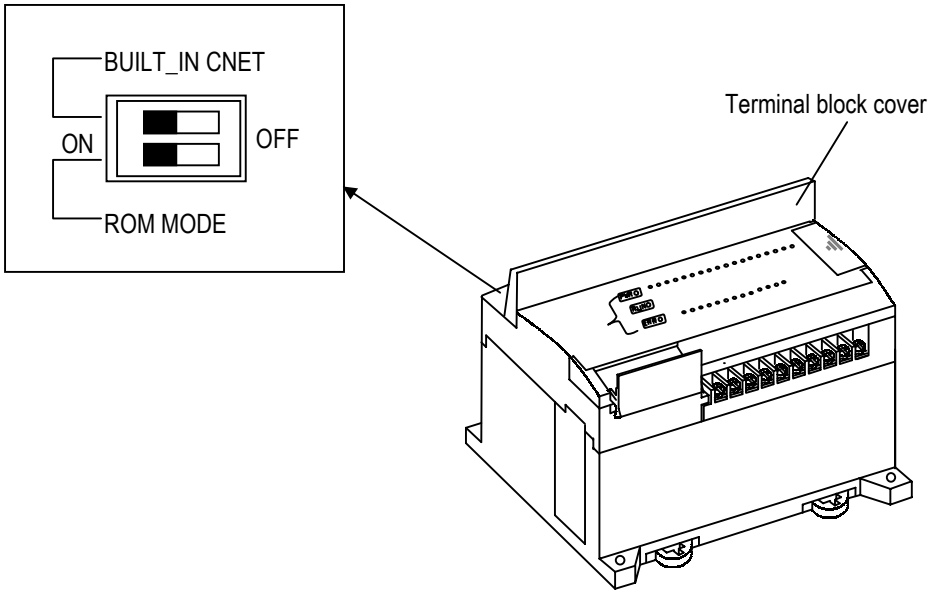

5.8.2 Usage

Set the base unit to the STOP mode.

Select the 'Flash memory' of on-line menu, the following window shows.

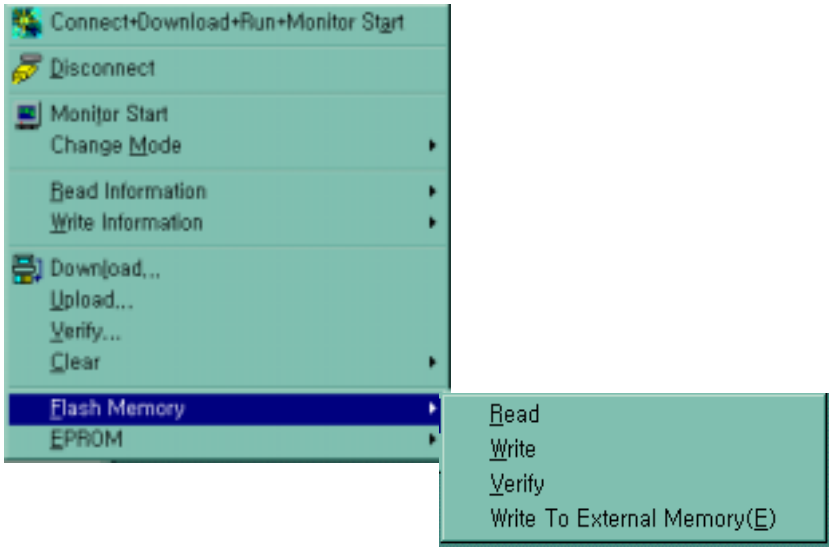

1) read

read the program and parameter to CPU memory from fresh memory

2) write

write the program and parameter to fresh memory from CPU memory

3) verify

verify the program and parameter between CPU memory and fresh memory

4) dip switch for operating flash memory.

Dip switch position	Description
upper switch is for Cnet. ON OFF ROM MODE	When power is on, the program saved in the flash memory operates.
Upper switch is for Cnet. ON OFF ROM MODE	CPU recognizes that there is no program in the flash memory, and starts to drive program from RAM.

REMARKS

1) The flag for flash memory operation is F00A.

Dip switch for flash memory operation is placed in deep place to prevent a mistaken operation caused by terminal block cover, etc. Use a small driver to operate it.

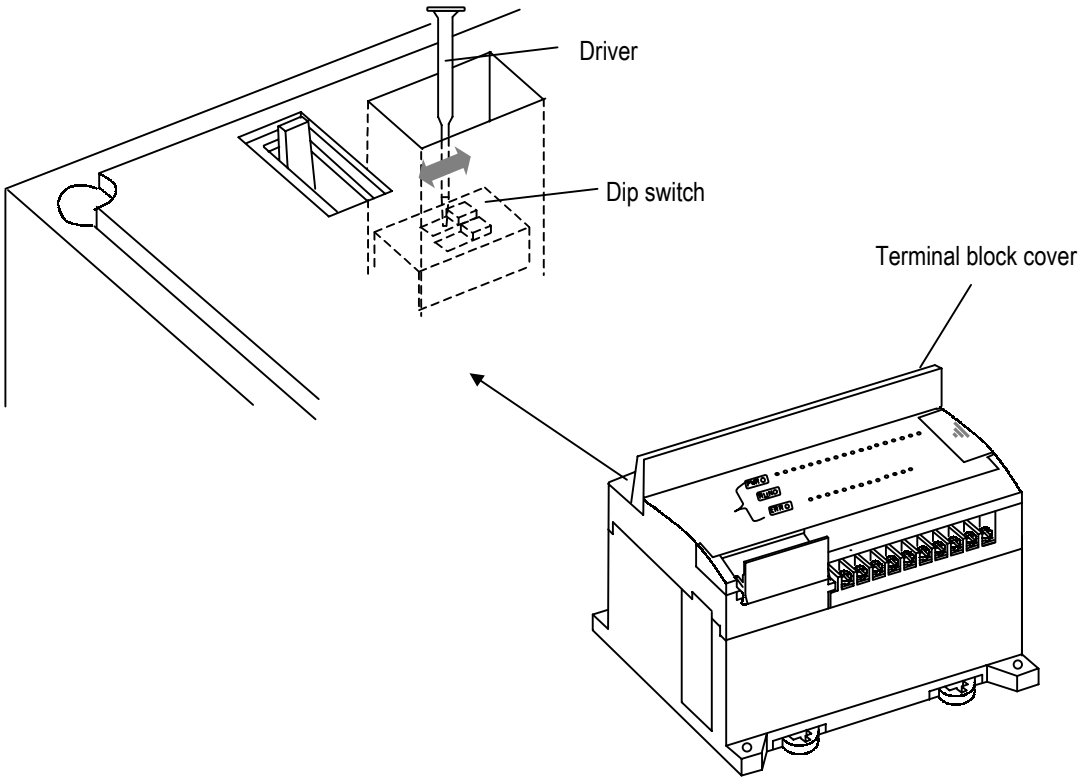

5.9 External Memory Module

MK80S series supplies external memory module for the user to save programs safely or download a program on the system and use it in case of a program is damaged.

5.9.1 Structure

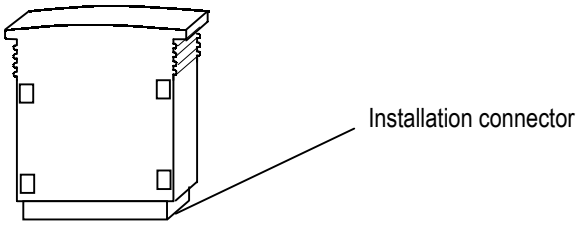

5.9.2 Usage

1) Saving the user's program on the external memory module.

Turn the power of the base unit off.

Install the memory module.

◆ When only basic unit is used: Connect to the expansion connector of the basic unit.

◆ When expansion unit is used: Connect to the expansion connector of the last connected expansion unit.

Turn the dip switch for ROM mode setting of the base unit to OFF.

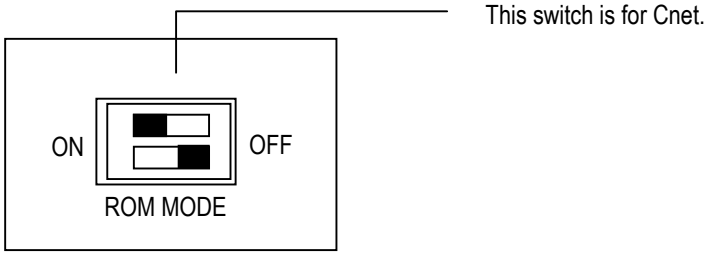

(4) Turn the power of the base unit on.

(5) Connect KGLWIN and PLC.

(6) Select ***Online – Flash memory – Write external memory*** in menu, and the following message box will displayed.

(8) Choose an item to be saved in the flash memory and press 'OK.'

(9) Turn the power of the base unit off.

(10) Remove the external memory module.

Through the above steps a user can save a program into the external memory module.

2) Run the PLC with a program of external memory module

(1) Turn the power of the base unit off.

(2) Install the memory module (When only base unit is used, connect to the expansion connector of the base unit. And when expansion unit is used, connect to the expansion connector of the last connected expansion unit).

(3) Set the dip switch for ROM mode setting of the base unit to OFF position.

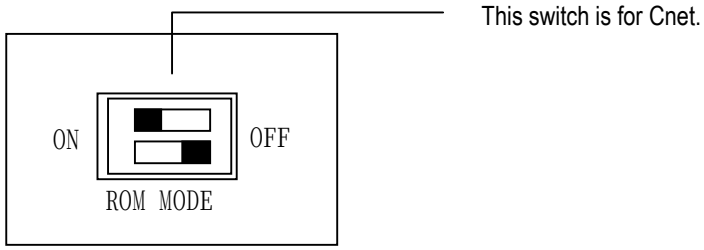

(4) Turn on the power of the base unit.

(5) As RUN LED and ERR. LED are on, the contents of the memory module is transferred into the program area of the base unit and ROM operation area of the flash memory. (It may take about 15 sec.)

(6) Operate according to the set operation mode.

(7) Turn off the power of the basic unit.

(8) Remove the memory module.

(9) Turn the power on.

Through the above steps the user can operate the PLC with program stored in the external memory module.

REMARK

1) When the PLC is operated with the external memory module, it always operates with restart.

2) Remove after the program transfer is finished.

5.10 RTC Module

MK80S series supplies RTC(Real Time Clock) module for the time-scheduling control. To use RTC function with K80S series, the RTC operation module should be attached to the expansion slot of main unit or expansion/special function unit. Clock operation by the RTC function is continued with a battery or super capacitor when the CPU is powered off.

5.10.1 Structure

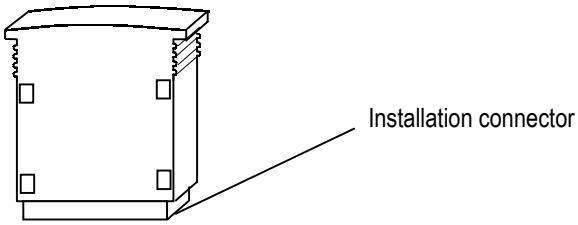

5.10.2 Usage

1) Clock Data

Clock data is the data comprised of year, month, day, hour, minute, second, and date.

Data name	Description	
Year	4 digits of the Christian Era	
Month	1 to 12	
Day	1 to 31 (A leap year is distinguished automatically)	
Hour	0 to 23 (24 hours)	
Minute	0 to 59	
Second	0 to 59	
Date	0	Sunday
	1	Monday
	2	Tuesday
	3	Wednesday
	4	Thursday
	5	Friday
	6	Saturday

2) Precision

Max. 1.728 second per day (general temperature)

Remark

1. The RTC data does not have factory default setting. Please write a correct RTC data before using RTC function first time.
2. If unreasonable RTC data is written to the CPU, the RTC function may operate abnormally.

   Example : 13 (month) 32 (day)

3) Read / write RTC data

a) Read RTC data

The current RTC data

Memory Area (Word)	Description		Data (BCD format)
	Upper byte	Lower byte	
F053	Lower 2 digits of year	Month	h9812
F054	Day	Hour	h2219
F055	Minute	Second	h3746
F056	Higher 2 digits of year	Date	h1902

Example : 1998. 12. 22. 19:37:46, Tuesday

b) Write RTC data

There is two ways to write new RTC data to the CPU.

The first one is using a handy loader (KLD-150S) or graphic loader (KGL-WIN). For detailed information, refer the user's manual of KLD-150S or KGL-WIN.

The second one is write sequence program. By switching a special bit on, user can replace the current RTC data with the preset data stored in a specified memory area. The followings are the memory address of preset data and an example program.

4) The preset RTC data

Memory Area (Word)	Description		Data (BCD format)
	Upper byte	Lower byte	
D4990	Lower 2 digits of year	Month	h9901
D4991	Day	Hour	h1711
D4992	Minute	Second	h5324
D4993	Higher 2 digits of year	Date	h1900

Example : 1999. 1. 17. 11:53:24, Sunday

M1904 : RTC data change bit

When the M1904 bit is switched on, the new data in D4990 ~ D4993 (K1000S : D9990 ~ D9993) will be moved to F53 ~ F56. After data is moved, M1904 has to be switched off immediately because current data will be updated every scan while M1904 is on.

<Example program>

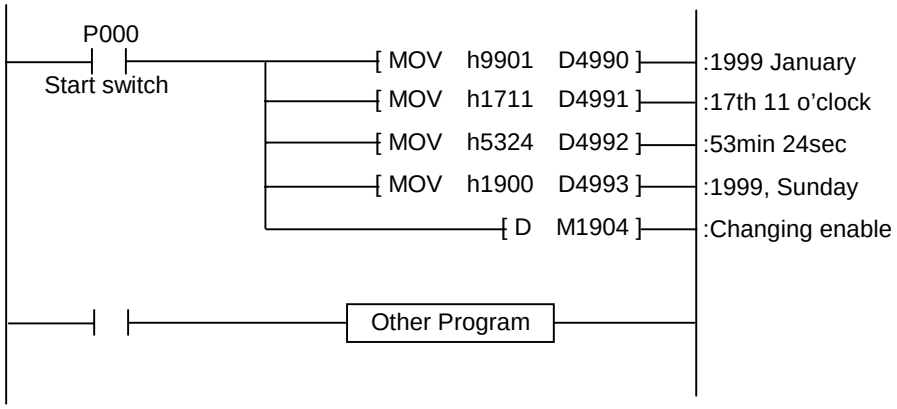

5.11 Battery

1) Specifications

Item	Specifications
Normal voltage	DC 3.0 V
Warranty life time	5 years
Application	Programs and data backup, and RTC runs in power failure
Specifications	Lithium Battery, 3V
External dimension (mm)	ϕ 14.5 X 26

2) Handling Instructions

(1) Don't heat or solder its terminals.

(2) Don't measure its voltage with a tester or short circuit.

(3) Don't disassemble.

3) Battery Replacement

Backup battery needs periodic exchange. In case of battery replacement at power off, the built-in super capacitor backup the program and retain variables about 30 minutes. However, it is recommended to complete the battery replacement as soon as possible, or turn on the base unit during battery replacement.

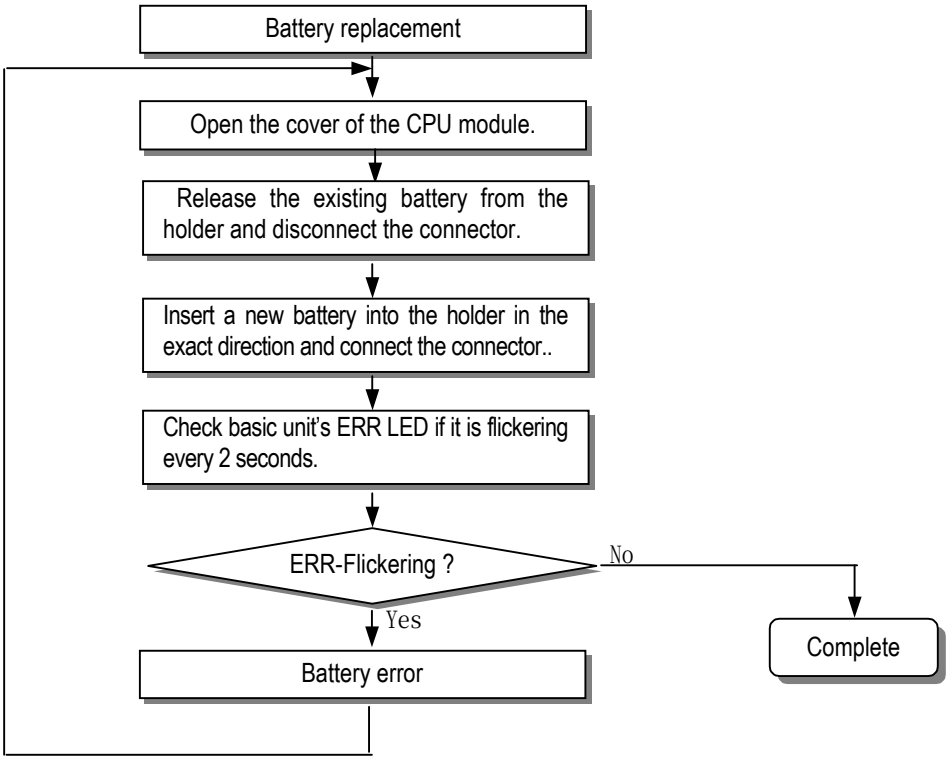

Chapter 6 Input and Output Modules

6.1 Input / Output Specifications

Digital input that offers to MASTER-K80S series are made to use both of electric current sink and electric current source.
To keep use coil load as an output module, maximum opening and shutting frequency is 1 second on and 1 second off.

The following diagram shows maximum life relay for relay output.

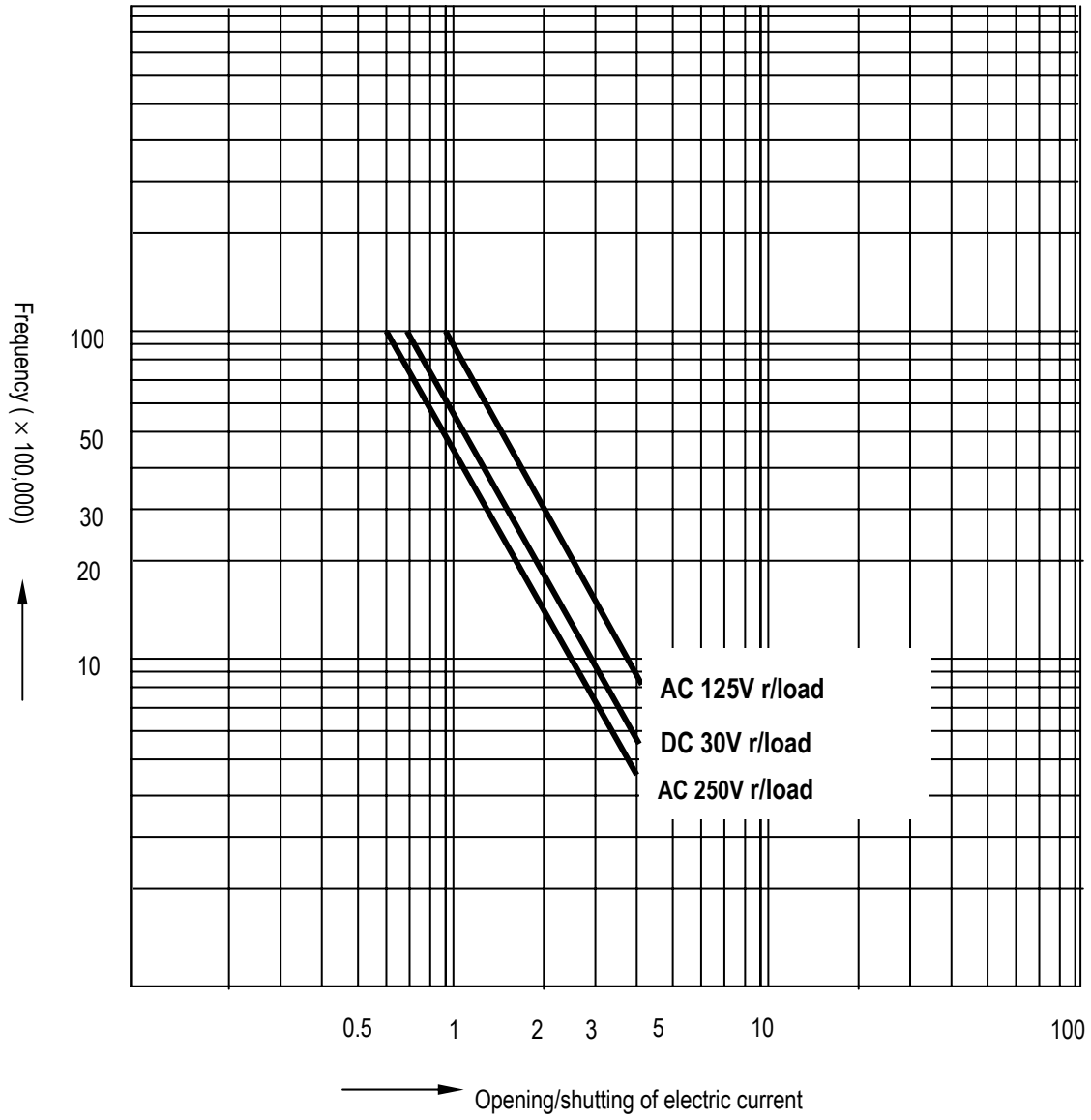

6.2 Digital Input Specification

6.2.1 Base unit

1) Specification

Specification \ Model		Base unit				
		K7M-DR10S	K7M-DR20S	K7M-DR30S	K7M-DR40S	K7M-DR60S
		K7M-DR10S/DC	K7M-DR20S/DC	K7M-DR30S/DC	K7M-DR40S/DC	K7M-DR60S/DC
		K7M-DT10S	K7M-DT20S	K7M-DT30S	K7M-DT40S	K7M-DT60S
Number of input points		6 points	12 points	18 points	24 points	36 points
Insulation method		Photo coupler				
Rated input voltage		DC24V				
Rated input current		7mA (P000 ~ P002 : 16mA)				
Operating voltage range		DC10.2 ~ 28.8V (ripple: less than 5%)				
Max. simultaneous input points		100% simultaneously On				
On voltage / On current		DC19 V or higher/ 5.7 mA or higher (P000 ~ P002 : 12.7mA or higher)				
Off voltage / Off current		DC6 V or lower / 1.8 mA or lower (P000 ~ P002 : 4mA or lower)				
Input impedance		Approx. 3.3 kΩ (P000~P002: approx. 1.5 kΩ)				
Response time	Off → On	15ms or less *1				
	On → Off	15ms or less *1				
Common terminal		6 points / COM	12 points / COM	18 points / COM	12 points / COM	16 points / COM
Operating indicator		LED turns on at ON state of input				

*1 : It is possible to select from 1ms to 15ms by 1ms at KGLWIN.

2) Circuit diagram

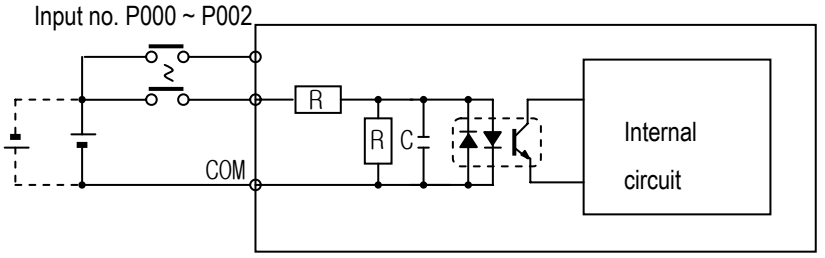

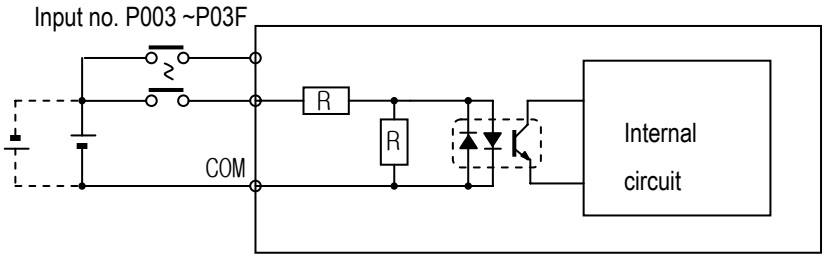

3) Input wiring

Base unit's wiring method is as follows. DC input specifications offered by K80S is to be used for both electric current sink and electric current source.

(1) 10-points base unit

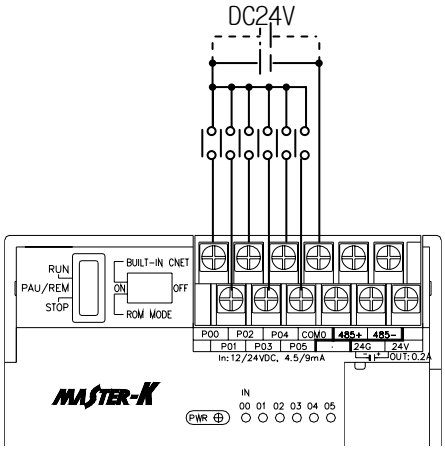

(2) 20-points base unit

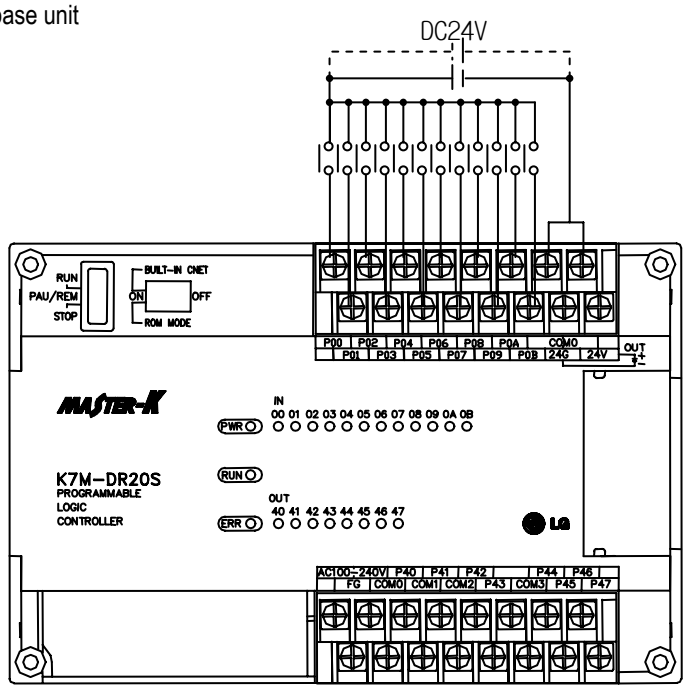

(3) 30-point base unit

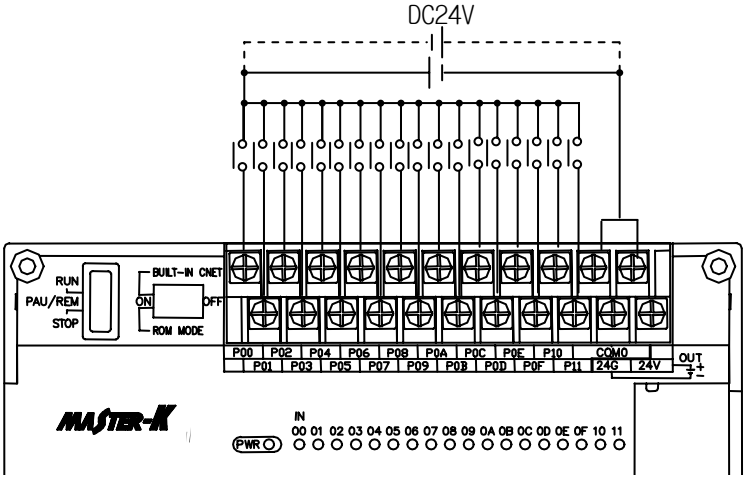

(4) 40-point base unit

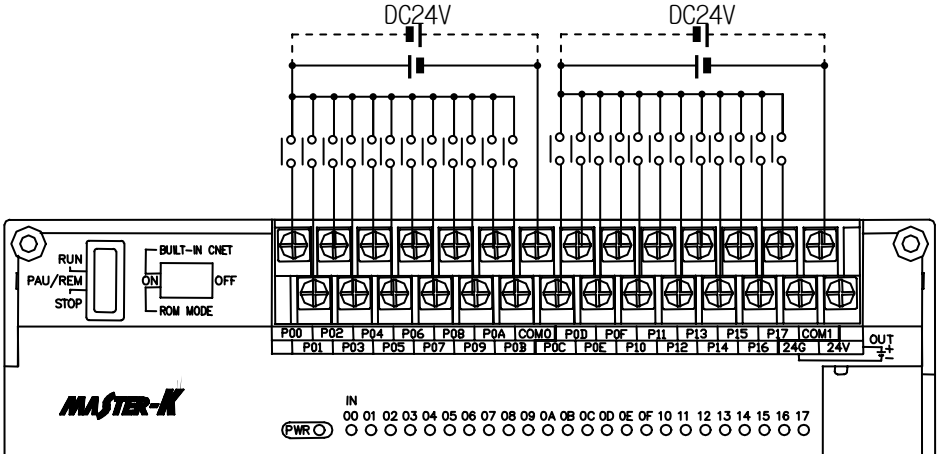

(5) 60-point base unit

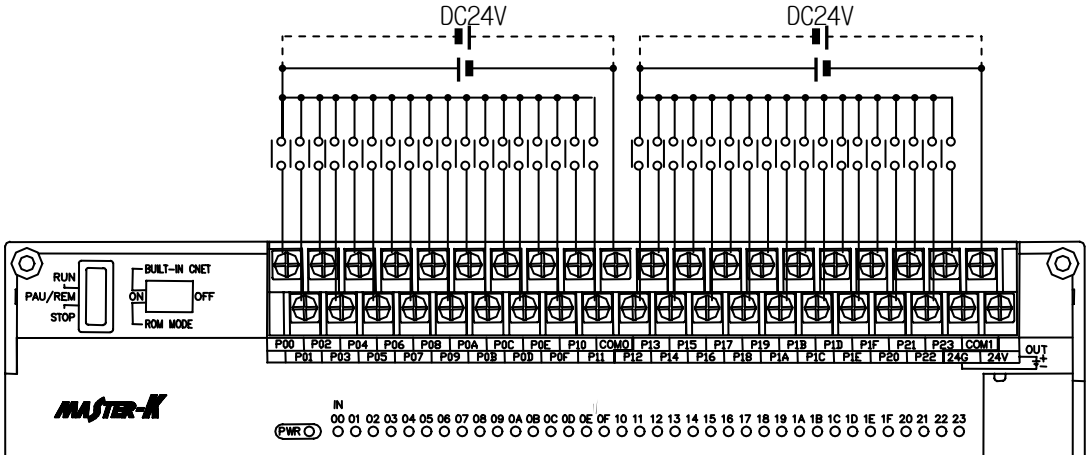

4) Example of external devices.

To connect with external device of DC output type into DC input module, wire depending on the type of the external device as shown.

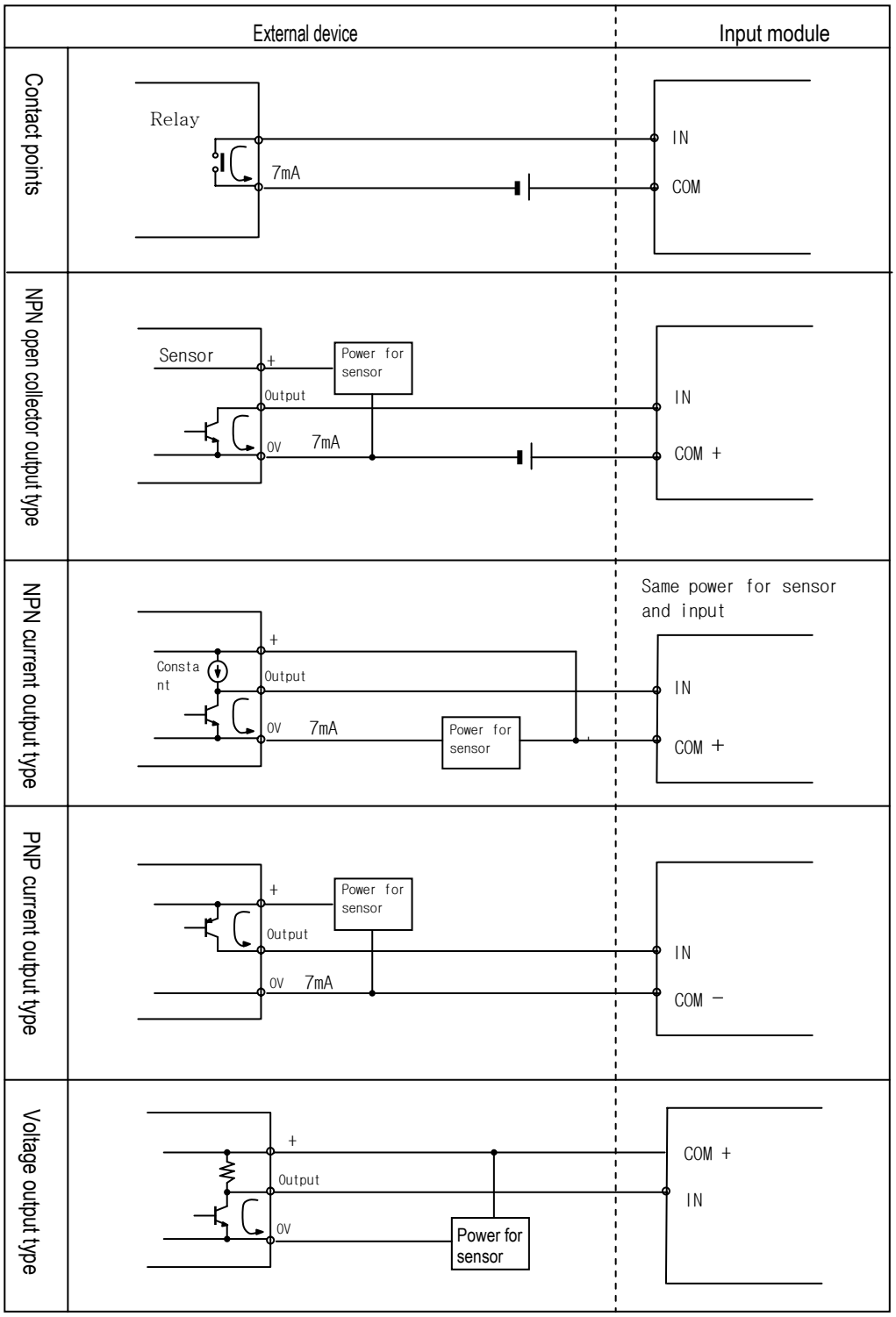

6.2.2 Expansion Module

1) Specifications

Model / Specification		Expansion Module
		G7E-DR10A
Number of input points		6 points
Insulation method		Photo coupler
Rated input voltage		DC12 / 24V
Rated input current		4.5 / 9 mA
Operating voltage range		DC10.2 ~ 28.8V (ripple: less than 5%)
Max. Simultaneous input points		100% simultaneously On
On voltage / On current		DC9.5V or higher/ 3.5 mA or higher
Off voltage / Off current		DC5V or lower / 1.8 mA or lower
Input impedance		Approx. 2.7 kΩ
Response time	Off → On	15ms or less *1
	On → Off	15ms or less *1
Common terminal		6 points / com
Operating indicator		LED turns on at ON state of input

*1 : It's possible to select from 1ms to 15ms by 1ms at KGLWIN.

2) Circuit diagram

It's the same with the one for the base unit.

3) Input wiring

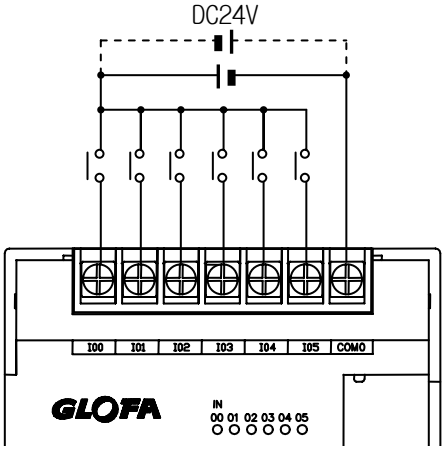

6.3 Digital Output Specification

6.3.1 Base unit (Relay Output)

1) Specification

Model / Specifications		Base Unit				
		K7M-DR10S	K7M-DR20S	K7M-DR30S	K7M-DR40S	K7M-DR60S
		K7M-DR10S/DC	K7M-DR20S/DC	K7M-DR30S/DC	K7M-DR40S/DC	K7M-DR60S/DC
Output point		4 points	8 points	12 points	16 points	24 points
Insulation method		Relay insulation				
Rated load voltage/current		DC24V / 2A (r/load), AC220V / 2A (COS Ψ = 1) / 1 point 5A / 1COM				
Min. load Voltage/current		DC5V / 1mA				
Max. load voltage/current		AC250V, DC110V				
Current leakage when off		0.1mA (AC220V, 60Hz)				
Max. On/off frequency		1,200/hr				
Surge Absorber		None				
Life	Mechanical	More than 20,000,000				
	Electrical	Rated on/off voltage/current load 100,000 or more				
		AC200V / 1.5A, AC240V / 1A (COSΨ = 0.7) 100,000 or more				
		AC200V / 1A, AC240V / 0.5A (COSΨ = 0.35) 100,000 or more				
		DC24V / 1A, DC100V / 0.1A (L / R = 7ms) 100,000 or more				
Response time	Off → On	10 ms or less				
	On → Off	12 ms or less				
Common method		1 point/ 1COM, 2 points/ 1COM, 4 points/1COM				
Operation indication		LED is on at on status of output				

2) Circuit

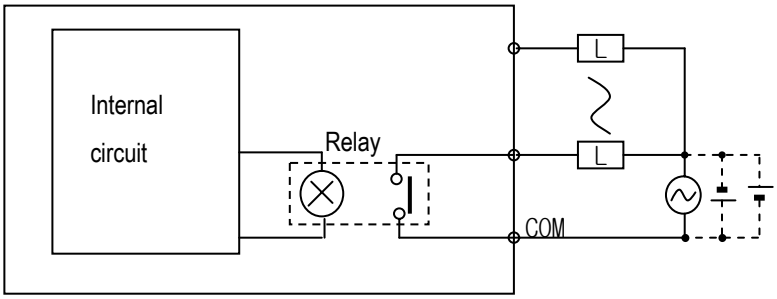

3) Output wiring

(1) 10-points base unit

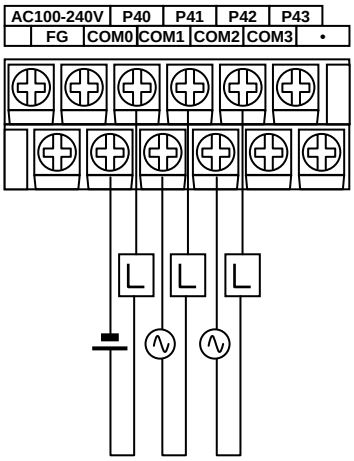

(2) 20-points base unit

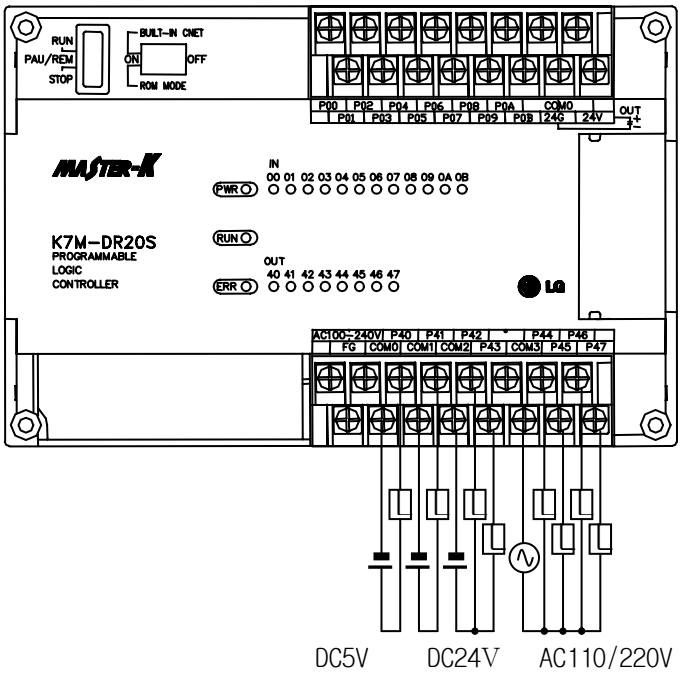

(2) 30-point base unit

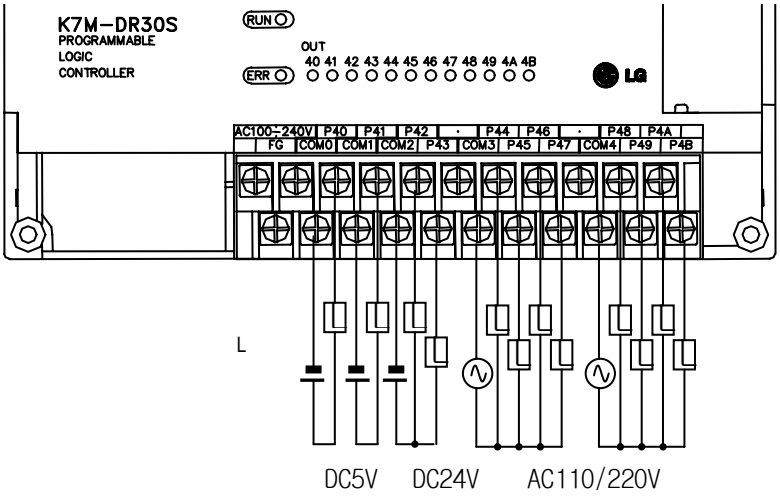

(3) 40-point base unit

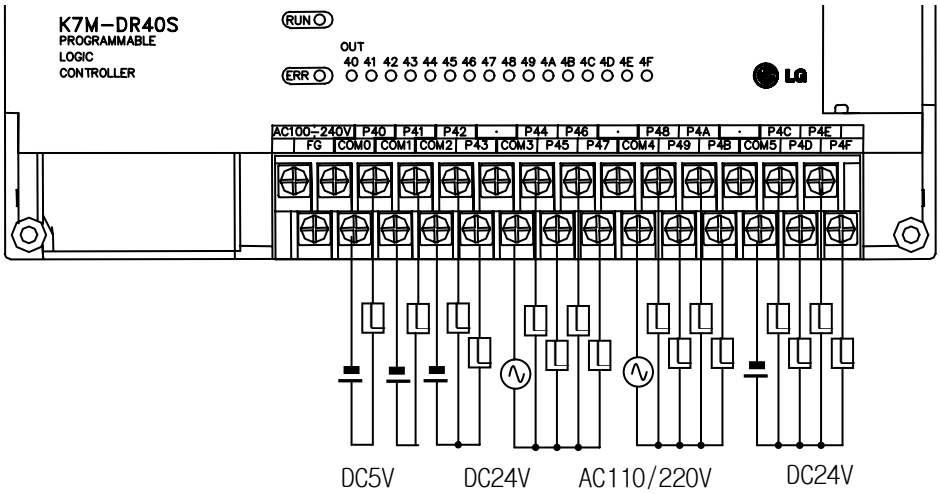

(4) 60-point base unit

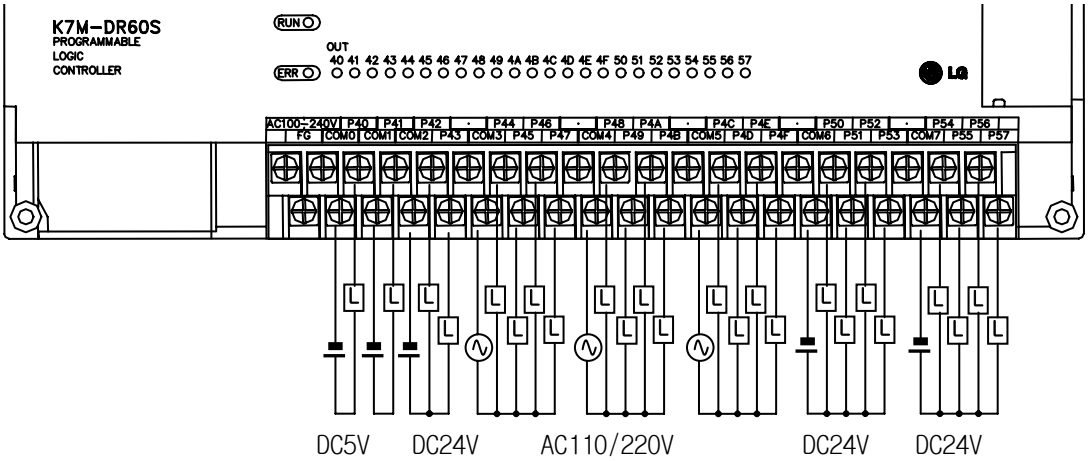

6.3.2 Base unit (Transistor Output)

1) Specification

Specifications \ Model		Base Unit				
		K7M-DT10S	K7M-DT20S	K7M-DT30S	K7M-DT40S	K7M-DT60S
Output point		4 points	8 points	12 points	16 points	24 points
Insulation method		Photo Coupler insulation				
Rated load voltage/current		DC12 / 24V				
Operating load voltage		DC10.2 ~ 26.4V				
Max. load current		0.5A / 1point, 3A / 1COM				
Current leakage when off		0.1mA or less				
Voltage drop when turn on		1.5V or less (Max. load)				
Max. Inrush Current		4A, 10mA				
Surge Absorber		Clamp Dlode				
Response time	Off → On	2 ms or less				
	On → Off	2 ms or less				
Common method		4 point/ 1COM	8 point/ 1COM	8 point/ 1COM 4 point/ 1COM	8 point/ 1COM (x2)	8 point/ 1COM (x3)
Operation indication		LED is on at on status of output				

2) Circuit

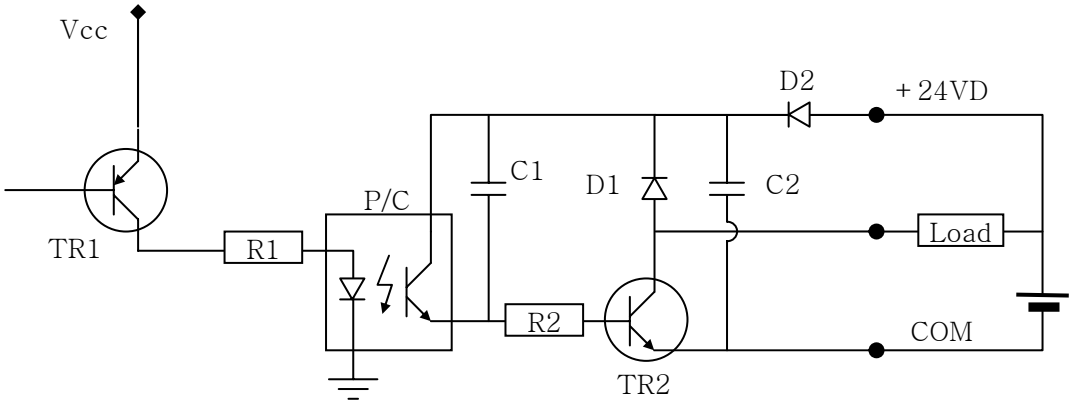

(3) Wiring Diagram

1) 10-point base unit

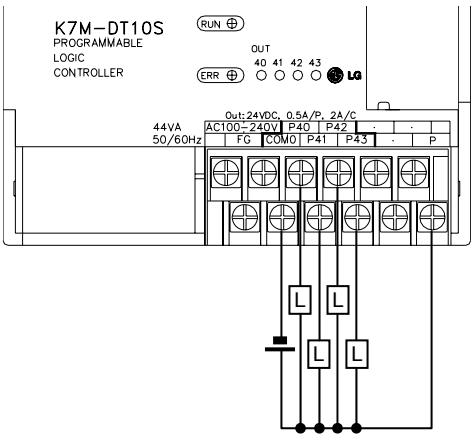

2) 20-point base unit

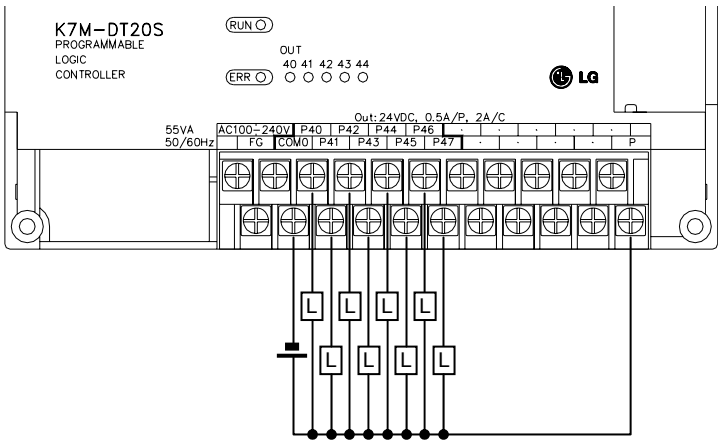

3) 30-point base unit

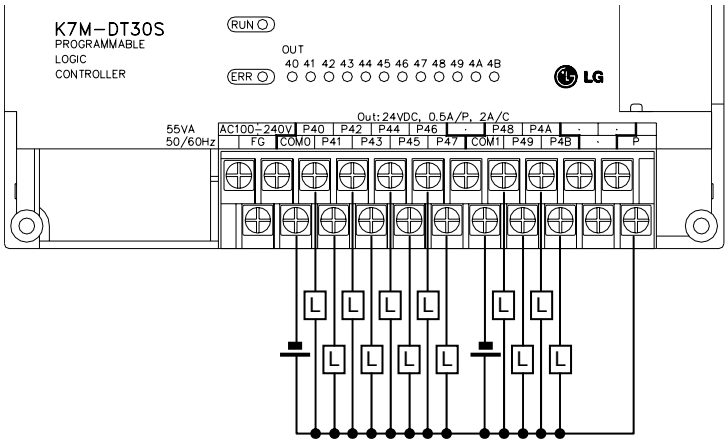

4) 40-point base unit

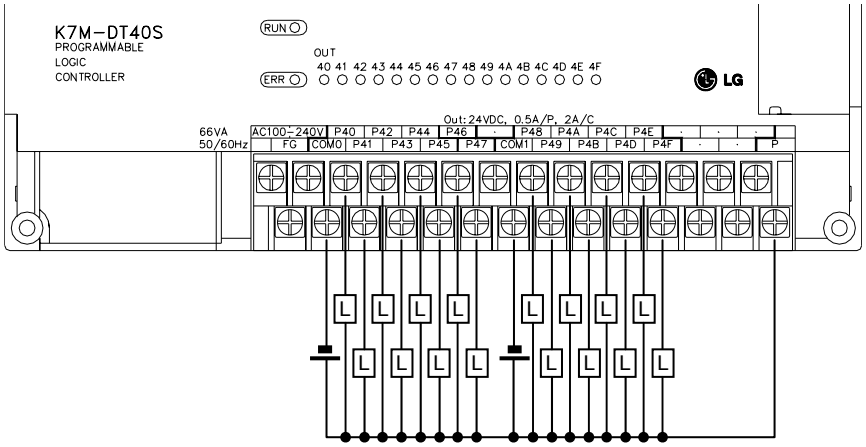

5) 60-point base unit

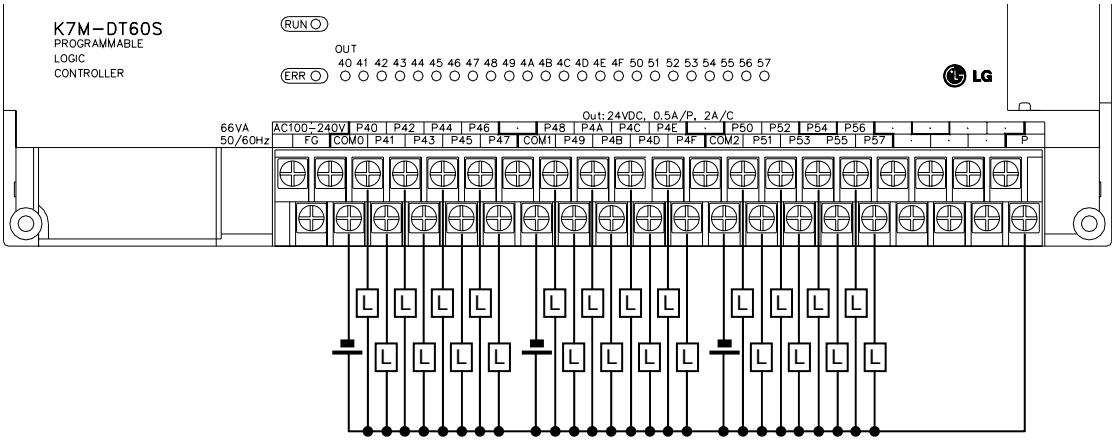

6.3.3 Expansion Module

1) Specifications

Specifications \ Model		Expansion Module
		G7E-DR10A
Output point		4 points
Insulation method		Relay insulation
Rated load Voltage/current		DC24V / 2A (r/load), AC220V / 2A (COS Ψ = 1) / 1 point 5A / 1COM
Min. load Voltage/current		DC5V / 1mA
Max. load voltage/current		AC250V, DC110V
Current leakage when off		0.1mA (AC220V, 60Hz)
Max. On/off frequency		1,200/hr
Surge Absorber		None
Life	Mechanical	More than 20,000,000
	Electrical	Rated on/off voltage/current load 100,000 or more
		AC200V / 1.5A, AC240V / 1A (COSΨ = 0.7) 100,000 or more
		AC200V / 1A, AC240V / 0.5A (COSΨ = 0.35) 100,000 or more
		DC24V / 1A, DC100V / 0.1A (L / R = 7ms) 100,000 or more
Response time	Off → On	10 ms or less
	On → Off	12 ms or less
Common method		1 point/ 1COM, 2 points/ 1COM
Operation indication		LED is on at on status of output

2) Circuit

It's the same with the output circuit of the base unit.

3) Output wiring

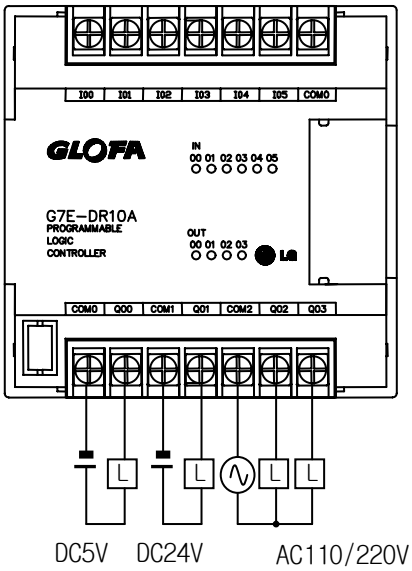

REMARK

1) Refer to 7.2 'Special Functions' for the special function units

Chapter 7 Usage of Various Functions

7.1 Built-in Functions

7.1.1 High-speed counter function

This chapter describes the specification, handling, and programming of built-in high speed counter of MK80S. The built-in high speed counter of MK80S(hereafter called HSC) has the following features;

3 counter functions as followings
- 1-phase up / down counter : Up / down is selected by user program
- 1-phase up / down counter : Up / down is selected by external B phase input
- 2-phase up / down counter : Up / down is automatically selected by the phase difference between A-phase and B.

Multiplication (1, 2, or 4) with 2-phase counter
- 2-phase pulse input multiplied by one : Counts the pulse at the leading edge of A-phase.
- 2-phase pulse input multiplied by two : Counts the pulse at the leading / falling edge of A-phase.
- 2-phase pulse input multiplied by four : Counts the pulse at the leading / falling edge of A-phase and B

1) Performance Specifications

Items		Specifications
Input signal	Types	A-phase, B-phase, Preset
	Rated level	24VDC (15mA)
	Signal type	Voltage input
Counting range		0 ~ 16,777,215 (Binary 24 bits)
Max. counting speed		1-phase 16kHz/ 2-phase 8kHz
Up / Down selection	1-phase	Sequence program or B-phase input
	2-phase	Auto-select by phase difference of A-phase and B
Multiplication		1, 2, or 4
Preset input		Sequence program or external preset input

2) Input specification

Items		Specifications
A / B phase	Rated input	24VDC (15mA)
	On voltage	14VDC or higher
	Off voltage	2.5VDC or lower
Preset input	Rated input	24VDC (15mA)
	On voltage	19VDC or higher
	Off voltage	6V or lower
	On delay time	Less than 1.5ms
	Off delay time	Less than 2ms

3) Names of wiring terminals

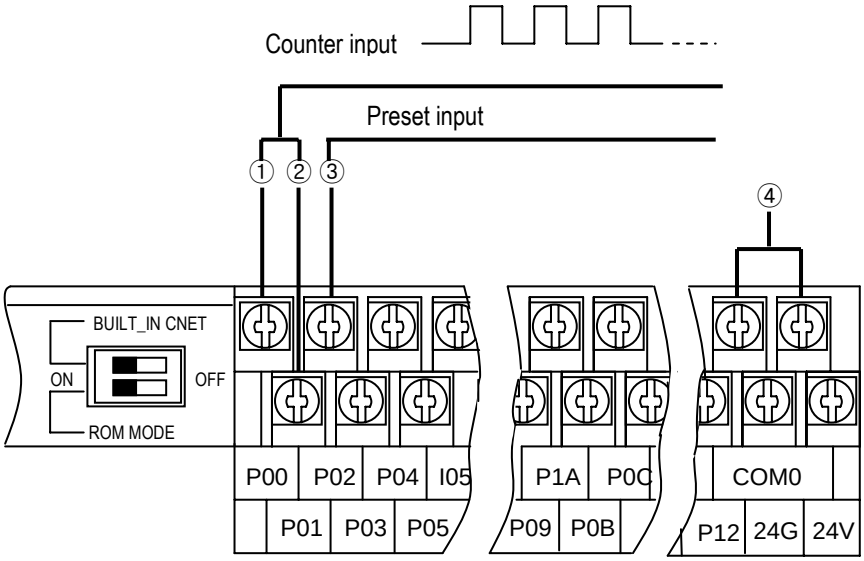

No.	Terminal No.	Names	Usage
①	P00	ϕ A 24V	A Phase input terminal
②	P01	ϕ B 24V	B Phase input terminal
③	P02	Preset 24V	Preset input terminal
④	COM0	Common input	Common terminal

4) External interface circuit

I/O	Internal circuit	Terminal No.	Signal name	Operation	Input warranted voltage
Input	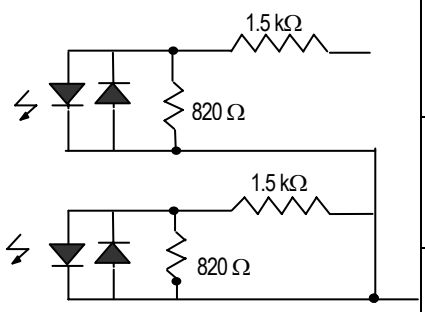	P00	A-phase pulse Input (DC24V)	On	14 ~ 26.4 V
				Off	2.5V or lower
		P01	B-phase pulse Input (DC24V)	On	14 ~ 26.4 V
				Off	2.5V or lower
		COM0	COM (input common)	—	
Input	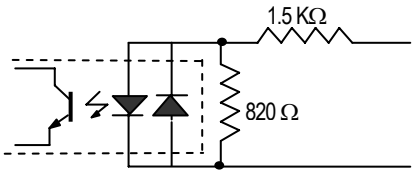	P02	Preset input (DC24V)	On	19 ~ 26.4 V
				Off	6V or lower
		COM0	COM (input Common)	—	

5) Wiring instructions

A high speed pulse input is sensitive to the external noise and should be handled with special care. When wiring the built-in high speed counter of MK80S, take the following precautions against wiring noise.

(1) Be sure to use shielded twisted pair cables. Also provide Class 3 grounding.

(2) Do not run a twisted pair cable in parallel with power cables or other I/O lines which may generate noise.

(3) Before applying a power source for pulse generator, be sure to use a noise-protected power supply.

(4) For 1-phase input, connect the count input signal only to the phase A input; for 2-phase input, connect to phases A and B.

6) Wiring example

(1) Voltage output pulse generator

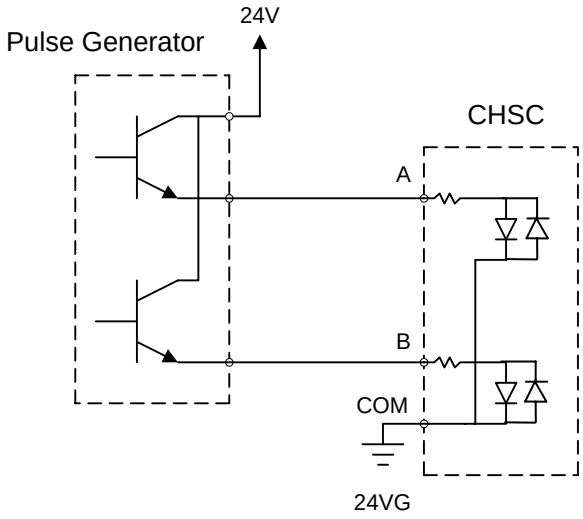

(2) open collector output pulse generator

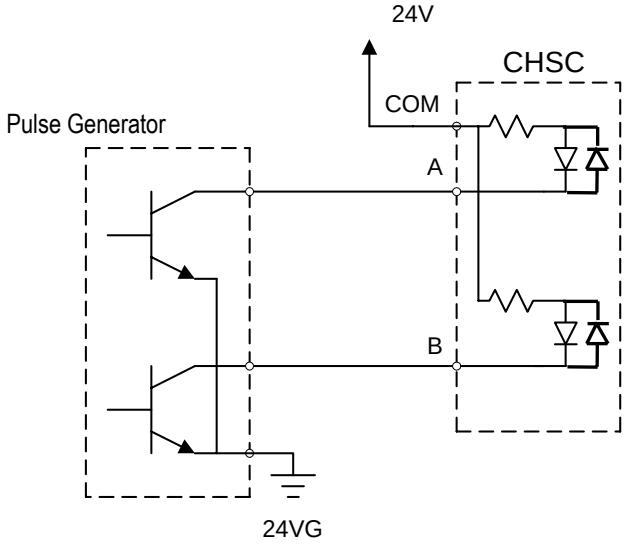

7) Instruction

When use the built-in high speed counter of K80S, the HSC instruction should be used. The instruction format of HSC is as following;

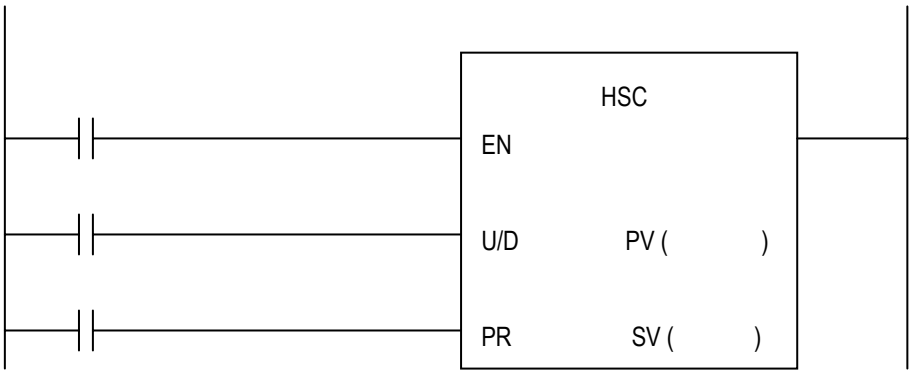

When the value of operation mode (D4999), PV or SV is not proper, the instruction error flag (F110) turns on and the HSC instruction is not executed.

Operation mode (D4999)		Input terminal			Multiplication	Description
		A phase	B phase	Preset		
1 phase	h1000	Pulse input	–	–	–	U/D : Set by sequence program PR : Set by sequence program
	h1010	Pulse input	–	Preset input	–	U/D : Set by sequence program PR : Set by preset input
	h1100	Pulse input	U/D input	–	–	U/D : Set by U/D input PR : Set by sequence program
	h1110	Pulse input	U/D input	Preset input	–	U/D : Set by U/D input PR : Set by preset input
2 phase	h2001	A-phase input	B-phase input	–	1	PR : Set by sequence program 1 multiplication
	h2002	A-phase input	B-phase input	–	2	PR : Set by sequence program 2 multiplication
	h2004	A-phase input	B-phase input	–	4	PR : Set by sequence program 4 multiplication
	h2011	A-phase input	B-phase input	Preset input	1	PR : Set by preset input 1 multiplication
	h2012	A-phase input	B-phase input	Preset input	2	PR : Set by preset input 2 multiplication
	h2014	A-phase input	B-phase input	Preset input	4	PR : Set by preset input 4 multiplication

Remark	
The U/D and PR input of sequence program must be programmed with dummy input even they are set as external input. When the PR and/or U/D is set as external input, the input conditions of sequence program is ignored.	

1) EN input (Counter enable)
   When the EN input turns on, the counter starts counting pulse. When the EN is off, the counting is stopped and the current value of high speed counter is cleared as 0.

2) U/D input (Up/down)
   When the U/D input is off, the high speed counter operates as up counter. When the U/D is off, it operates as down-counter.

3) PR input (Preset)
   When the PR input is on, the current value of high speed counted is replaced with the preset value (PV).

4) Output relay (F0170)
   The F070 bit will be turn on when the current value of high speed counter (F18 : lower word, F19 : upper word) is equal of greater than the set value (SV).

5) Carry flag (F0171)
   The carry flag turns on when the current value of high speed counter is underflow (0 → 16,777,215) during down counting or overflow (16,777,215 → 0) during up counting.

6) Current value
   The current value of high speed counter is stored at two words, F18 and F19. The lower word is stored at F18, and upper word is stored at F19.

8) example program

(1) 1-phase operation mode (U/D by program : D4999 = h1010)

U/D : set by sequence program (M001)
PR : set by external PR input

Ladder diagram

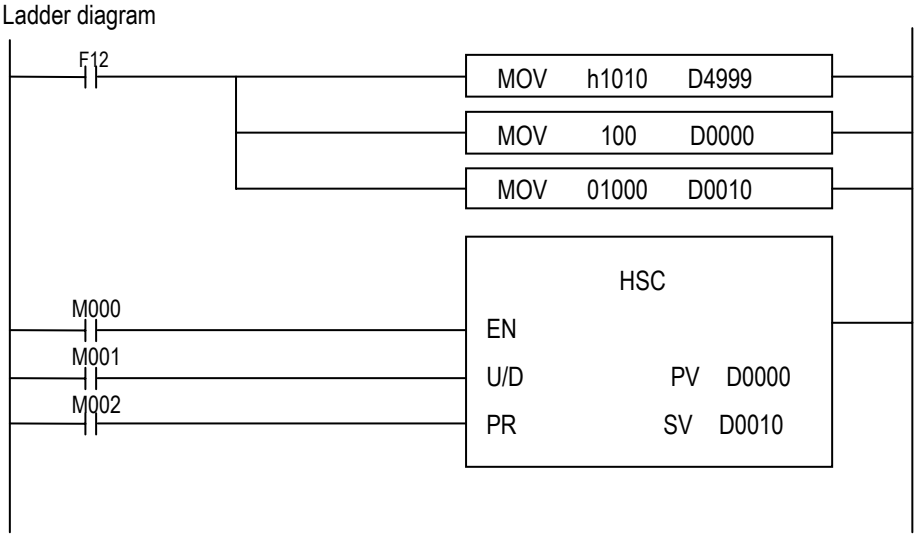

Time chart

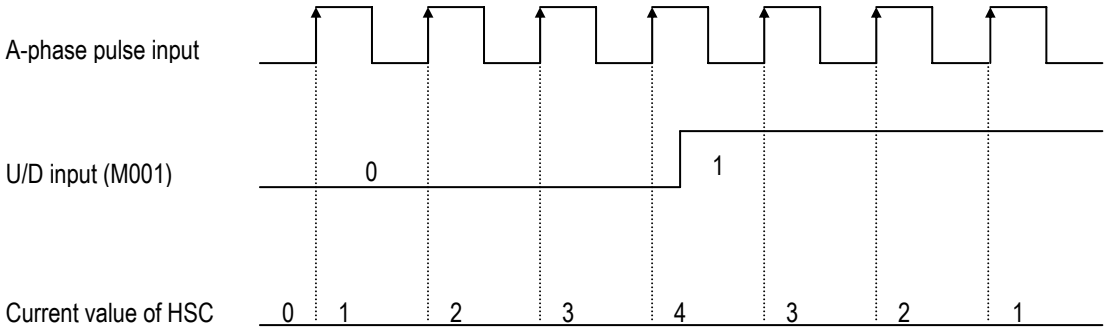

(2) 1-phase operation mode (U/D by B phase : D4999 = h1100)

U/D : set by external input (B-phase input)
PR : set by sequence program (M002)

Ladder diagram

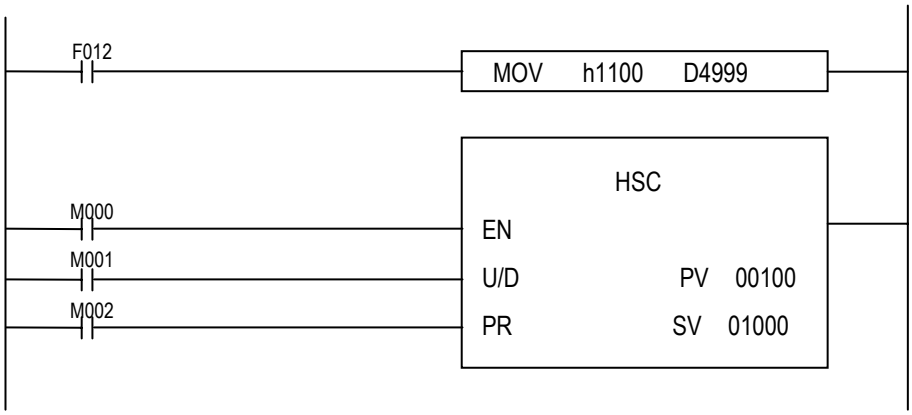

Time chart

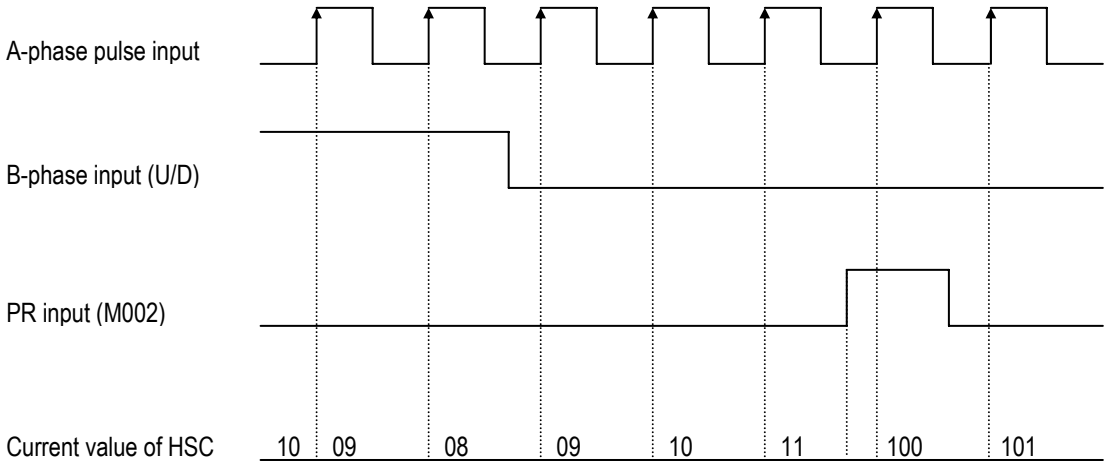

(3) 2-phase operation mode (1 Multiplication Operation : D4999 = h2011)

U/D : set automatically by the phase difference between A and B phase
PR : set by external PR input
Multiplication : 1

Ladder diagram

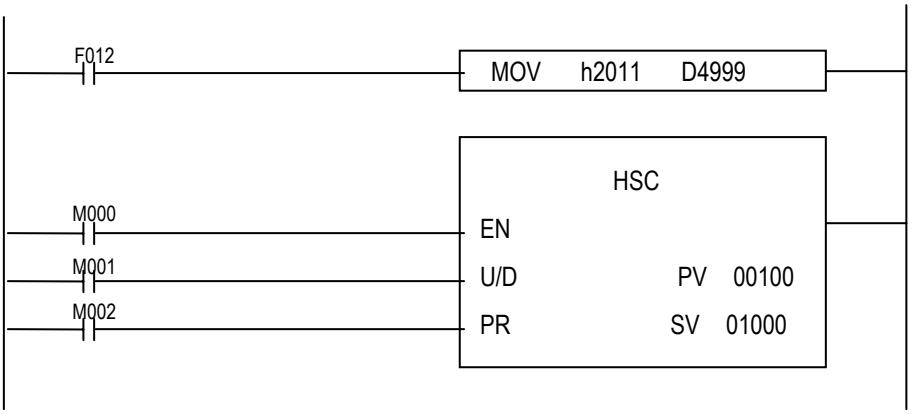

Time chart

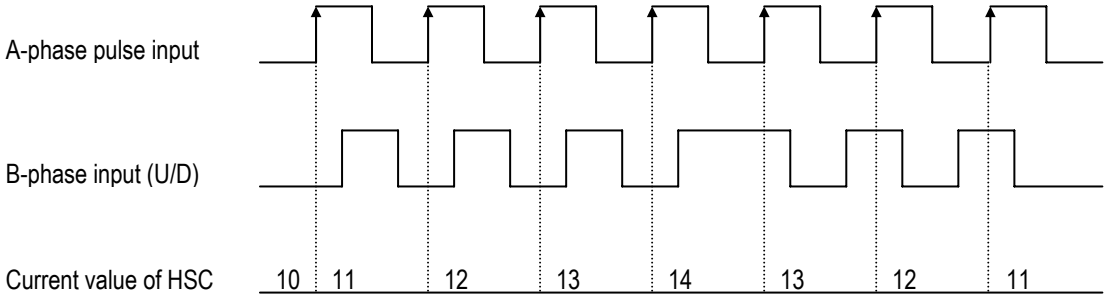

4) 2-phase operation mode (2 Multiplication Operation : D4999 = 2012)

U/D : set automatically by the phase difference between A and B phase
PR : set by external PR input
Multiplication : 2 times

Ladder diagram

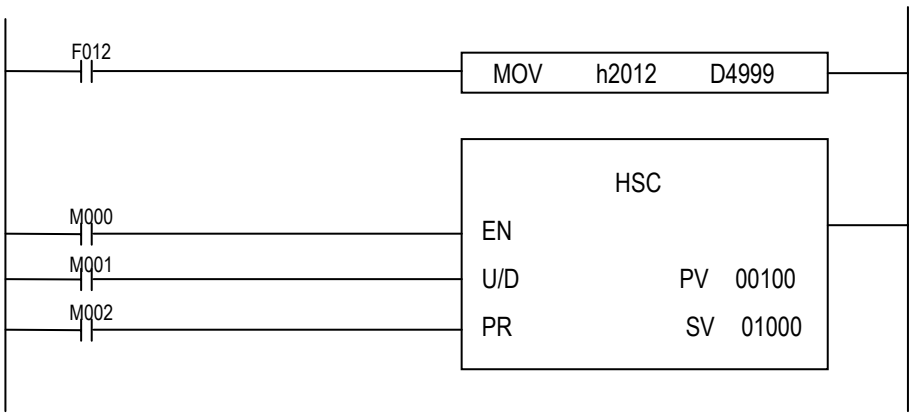

Time chart

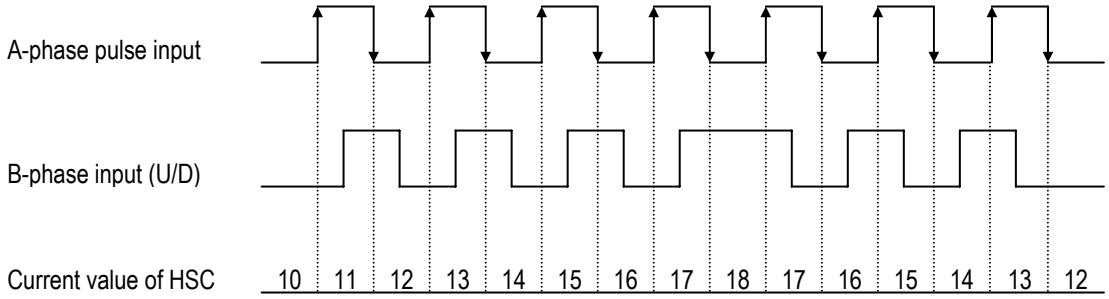

(5) 2-phase operation mode (4 Multiplication Operation : D4999 = h2014)

U/D : set automatically by the phase difference between A and B phase
PR : set by external PR input
Multiplication : 4 times

Ladder diagram

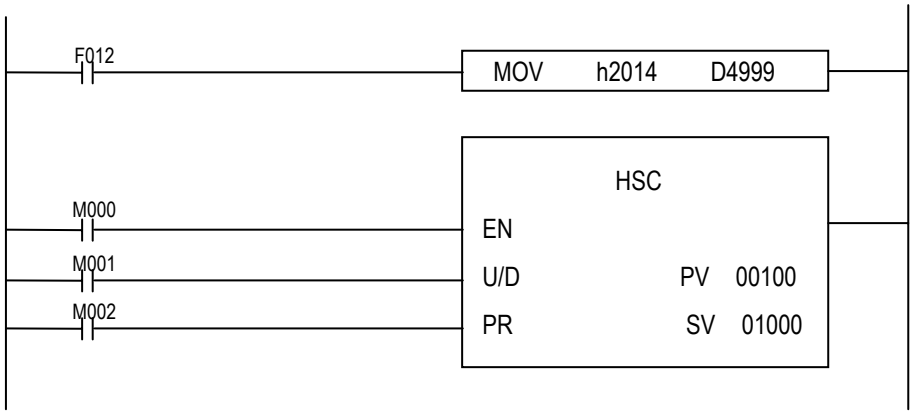

Time chart

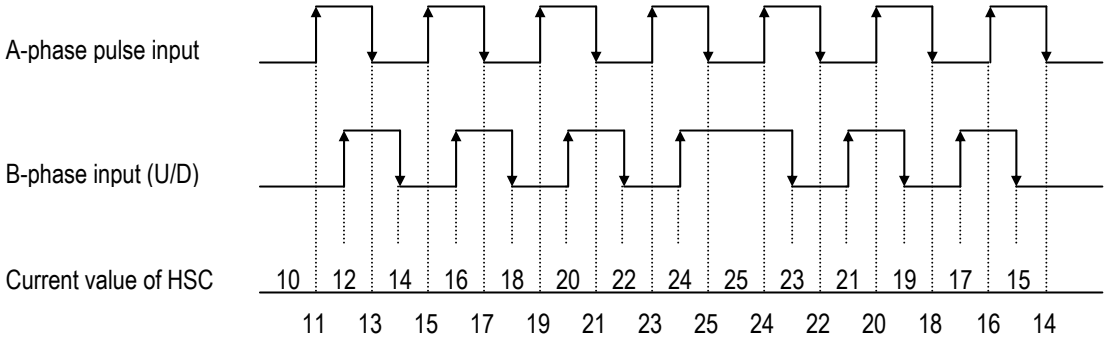

7.1.2. Pulse Output Function

In the transistor output type of MK80S, the pulse output function - maximum 2Kpps - is internalized. By using this function with stepping motor or servo motor driver, MK80S is applicable to a simple positioning system.

1) Usage of the Pulse Output

Transistor output type of MK80S outputs the signals of pulse and direction in an output contact point through the instruction (PULSOUT). The outputted pulse is connected to motor driver it is controlled position in the following figure.

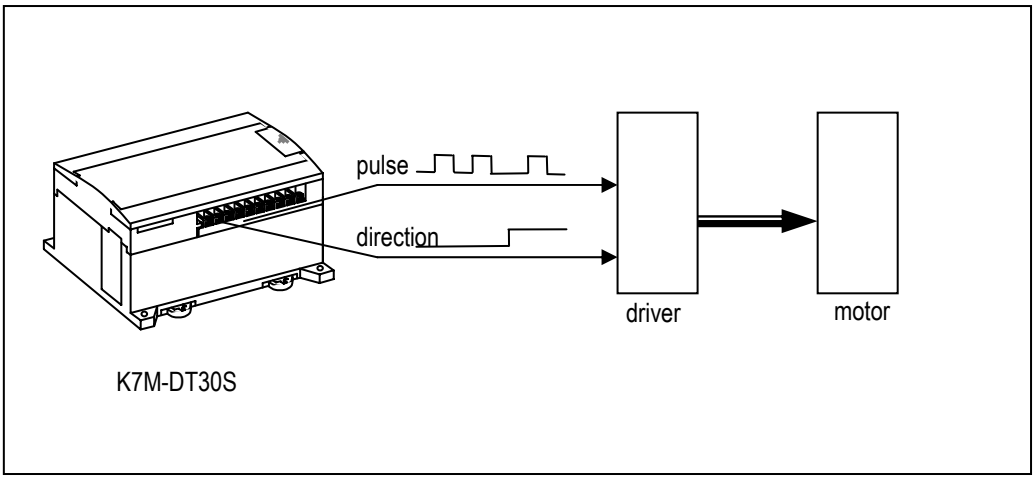

Choose a mode from the pulse out function by parameter setting and operate following 3 modes

(1) Trapezoidal operation

The pulse output function operates in order of acceleration – uniform velocity – deceleration.

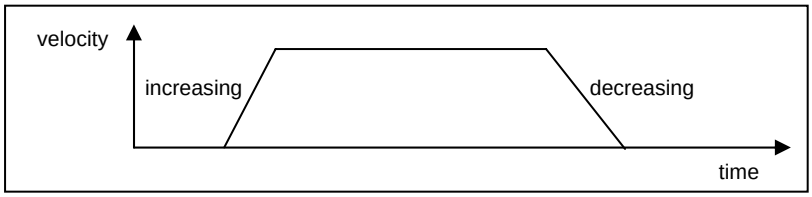

(2) Uniform velocity operation

Operates with the uniform velocity without increasing/decreasing operation

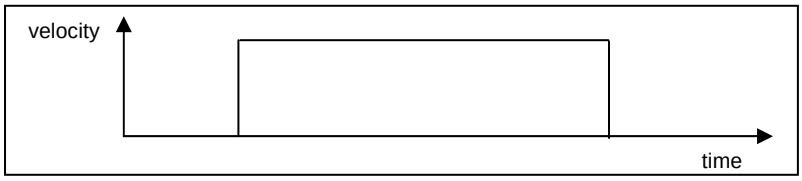

(3) Infinite operation

Operate infinitely without an increasing/decreasing operation until meet the emergency stop command.

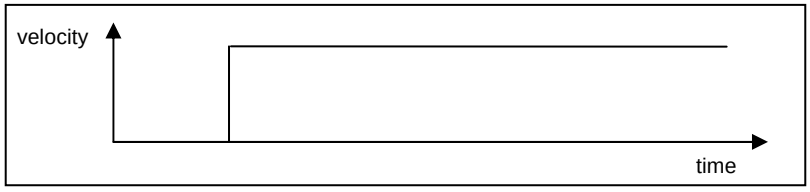

2) Functional Specification

Item	Specification
No. of output	1 point
Output type	Pulse
Output velocity	Max 2Kpps, Min 50pps
Output pulse	0 ~ 2147483647
Execution type of the increasing/decreasing velocity	Designation of acceleration
Type of the direction designation	Right/opposite direction pulse output
Load power supply	DC 12V/24V
Usable range of the load power supply	DC10.2 ~ 26.4V
Maximum load current	150mA
Initiative electric current	Less than 0.4A, 10ms
Maximum power dropdown under On	Less than DC 0.5V
Electric current leakage under Off	Less than 0.1mA
On delayed time	Less than 1ms
Off delayed time	Less than 1ms

Remark

1) Several points can be used for the pulse output point if they are not output at the same time. Thus it is possible that right direction pulse is output as P040, opposite direction pulse is output as P041.

3) Names of parts

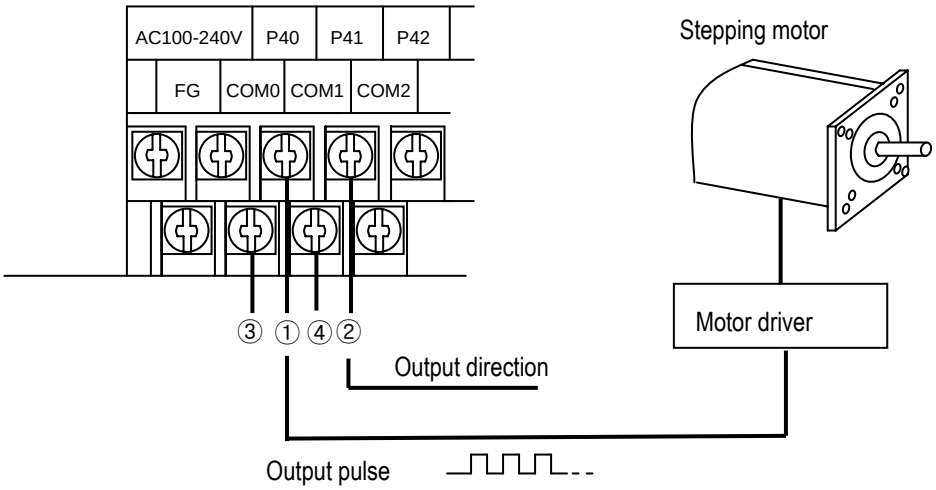

No.	Terminal No.	Names	Usage
①	P40	Pulse output	Pulse output terminal of right direction
②	COM0	Common	Pulse output common terminal
③	P41	Direction output	Direction output terminal
④	COM0	Common	Direction output common terminal

Remark

If the motor drive is not input direction, but is input right/opposite direction pulse (the opposite direction pulse can be output through using 2 instruction (PULSOUT) to P41 contact point

4) Internal circuit and external wiring

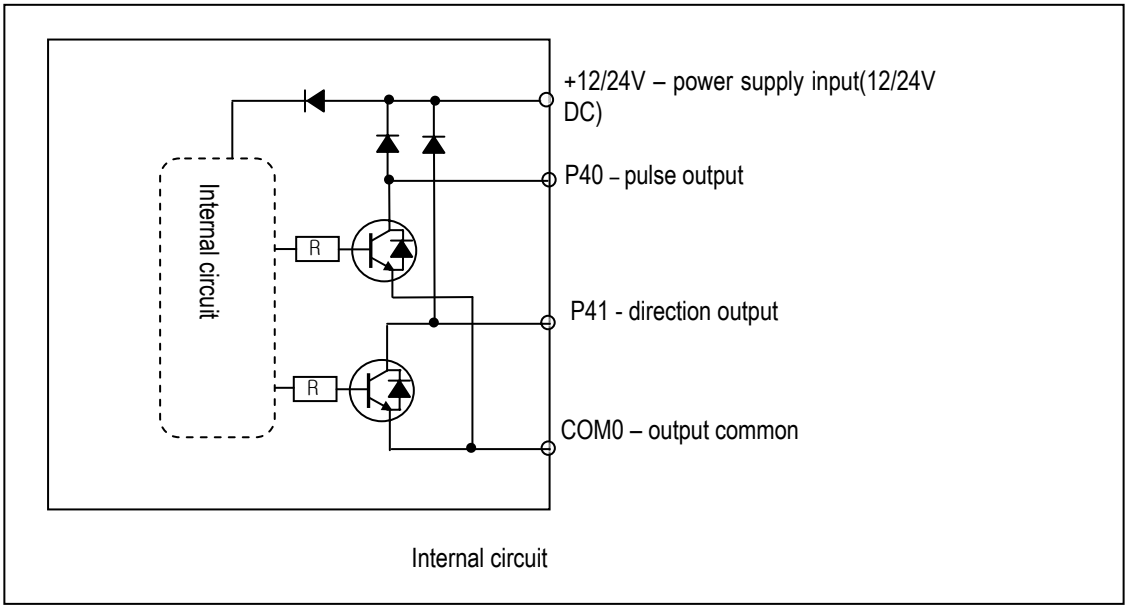

Internal circuit

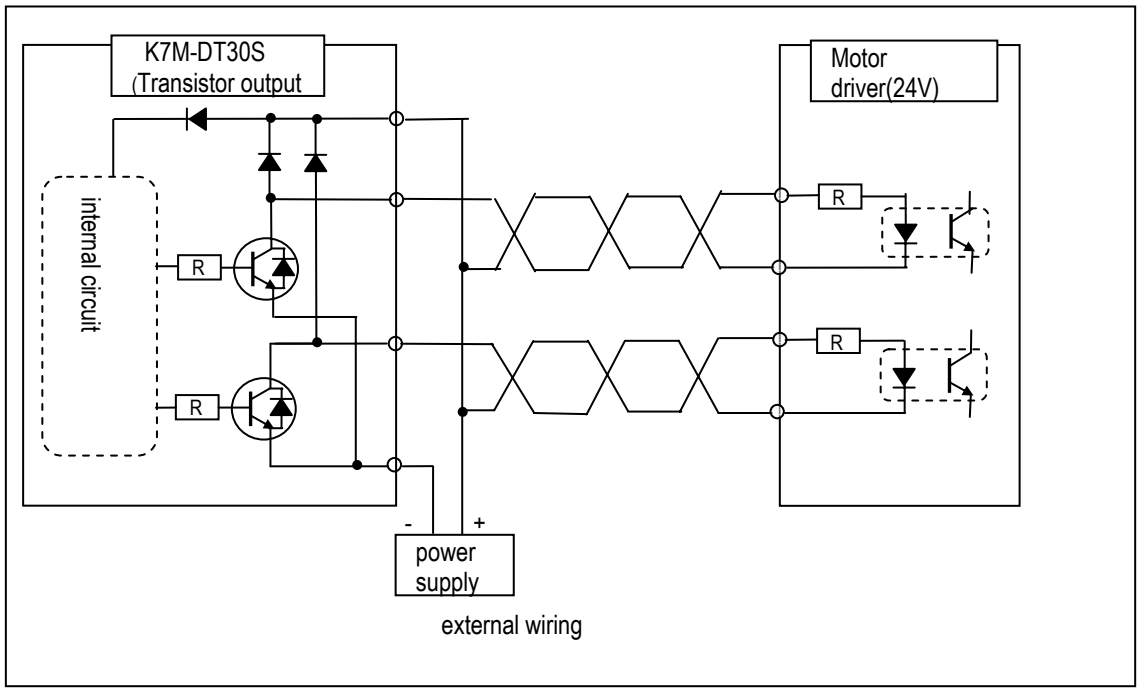

external wiring

Remark

Be careful about the counter plan of the noise during the wiring in the pulse output.
1) Use twisted pair shields wire for wiring and execute 3rd contact point.
2) Be sure to separate from the power supply line and I/O lines on which noise usually occurs.
3) Length of wire should be as short as possible.
4) Be sure to use the stable power supply for the pulse output and separate it from I/O power supply.

5) The setting of pulse out parameter

The setting of pulse out parameter set KGLWIN. Setting windows is as below.

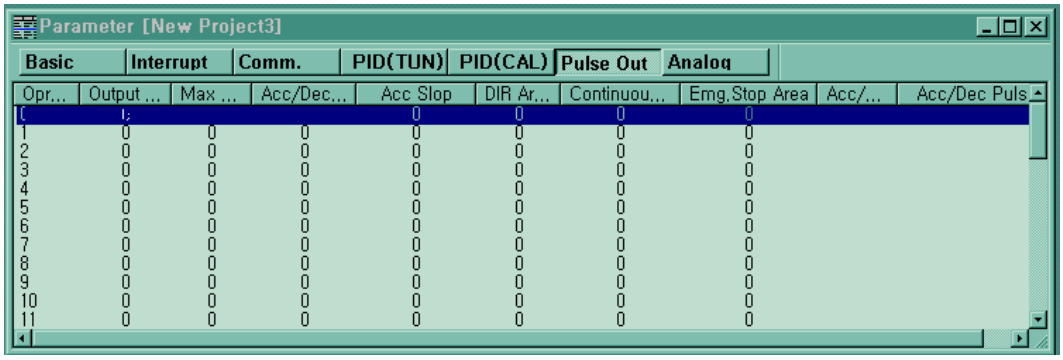

It is possible to set 40 operational pattern.

When click the pattern no. parameter setting window is displayed as bellow

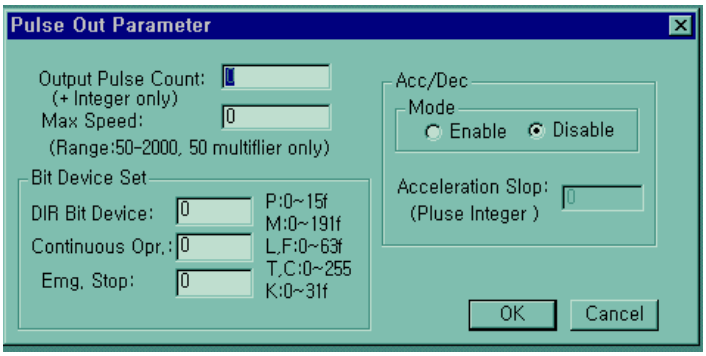

6) parameter explanation

(1) operational pattern No.

operation pattern No. is each pulse out pattern No. Max. 40 patterns can be set

(2) Output pulse count

It sets output pulse number.(The setting range : 0 ~ 42944967295)

(3) Max speed

It sets operational speed at normal section (The setting range : 50 ~ 2000pps, 50multiflier only)

(4) Acceleration/ Deceleration mode

Acceleration/ Deceleration mode is designation of increasing/decreasing velocity operation

Disable : uniform velocity operation enable : increasing/decreasing velocity operation

(5) Acceleration/deceleration slop

Acceleration slop is available in case that acceleration/deceleration mode is enable
This is slop that pulse frequency reach to maximum pulse frequency from '0' pulse. (only integer)

(6) Bit device set

a) Direction contact signal

setting of contact for direction signal output

b) continuous operation
setting of contact for infinitive operation

c) emergency stop
setting of contact for emergency stop

(7) The number of acceleration pulse
Automatically calculate at KGL-WIN if the maximum pulse and slop are set by user
Calculation method is as below

The number of acceleration pulse = [(maximum pulse – 50) / 50 +(maximum pulse – 100) / 50 + ····· + (100 / 50) + (50 / 50)] x acceleration slop x 2

ex) maximum pulse : 1000pps , acceleration slop : 1

The number of acceleration pulse = [(1000 – 50) / 50 + (900 – 50) / 50 + ····· +(100 /50) + (50 /50)] x 1 x 2
= 380 (deceleration pulse is also 380)

(8) acceleration time
Automatically calculate at KGL-WIN if the maximum pulse and slop are set by user.
Calculation method is as below

acceleration time = [[(maximum pulse – 50) / 50] x acceleration slop x 10

ex) maximum pulse : 1000pps , acceleration slop : 1
acceleration time = [[(1000 – 50) / 50] x 1 x 10 = 380ms (deceleration time is also 380ms)

Remark

Acceleration slop and deceleration slop of MK80S pulse output are set up as the same. Set up proper value by the sort of motor because if a/d slop increases, the arrival time to the designated max. Cycle also increases.

7) pulse out operation explanation

Condition 1)

Set up as acceleration slop = 1, max. frequency = 1000, no of pulse out = 5000.

← If as acceleration slop = 1, 1 pulse is output on the 1st step (velocity: 50pps).
Pulse velocity is 50pps, so time consuming is 20ms.

↑ 2 pulses are output on the 2nd step (velocity: 100pps) and time consumes 20ms

→ By calculation in the same way, the time to reach to 1000pps is
20ms x (20-1) = 380ms, and the no. of output pulses are 1+2+3...+18+19 = 190 units.

↓ Decreasing velocity inclination is 1, thus 190 units of pulses are needed.

° The no. of pulses in the uniform velocity region are 5000-190-190=4,620 units.

± Whole spent time is 50,380ms

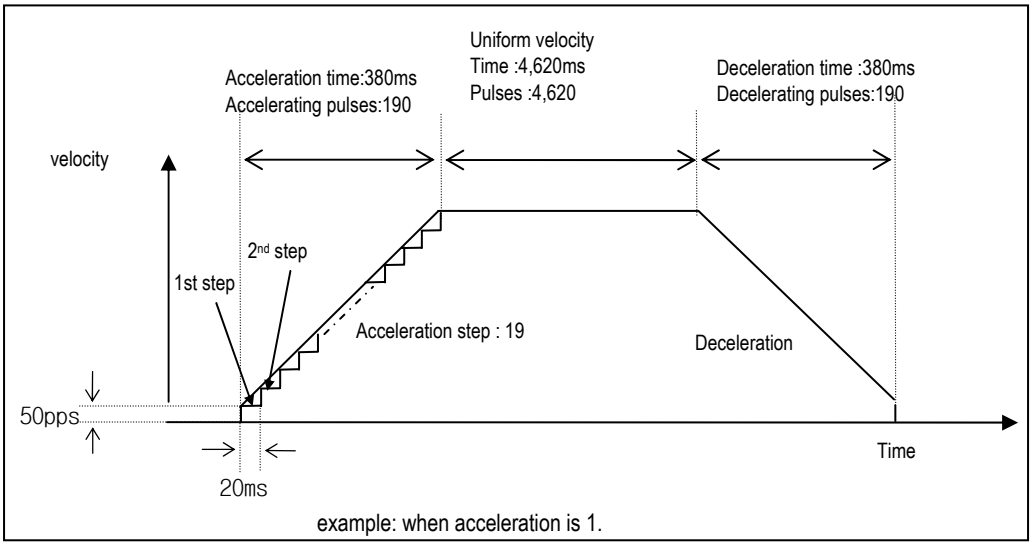

example: when acceleration is 1.

Condition 2
Set up as acceleration slop = 2, max. frequency = 1000, no of pulse out = 5000.

← If I/D velocity inclination is 2, 2 pulses are output on the 1st step(velocity: 50pps). Pulse velocity is 50pps. So time consuming is 40ms.
↑ 4 pulses are output on the 2nd step(velocity: 100pps) and time consumes 20ms
→ By calculation in the same way, the time to reach to 1000pps is 40ms * (20-1) = 760ms, and the no. of output pulses are 2+4+6...+36+38 = 380 units.
↓ Decreasing velocity inclination is 2, thus 380 units of pulses are needed.
° The no. of pulses in the uniform velocity region are 5000-380-380=4,240 units.
± Whole spent time is 57,600ms

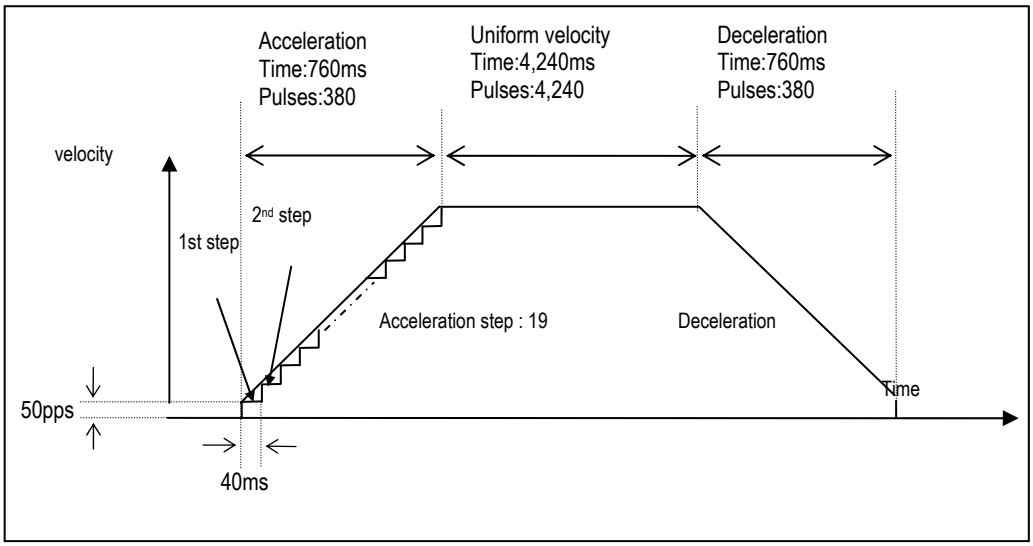

Example) Acceleration is 2.

Remark

If the acceleration slop goes bigger, the increasing time and pulse go bigger by direct proportion to inclination. Then be careful of an occurring of the instruction error when the no. of a/d pulse becomes bigger than the no. of whole pulse.

8) instruction

Instructions		Available Device											Steps	Flag		
		M	P	K	L	F	T	C	S	D	#D	Inte-ger		Error (F110)	Zero (F111)	Carry (F112)
DUTY	n									O		O	7	O		
	S_1	O	O	O	O		O	O		O	O					
	S_2		O													

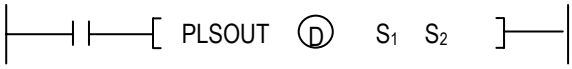

n	Pattern no.
S_2	Output pulse count no.
S_3	Output pulse contact

(1) Functions

- ‘n’ designates pattern no. which is registered at parameter.
- S1 designates device name which will be stored output pulse count no. and error code .(3 word)
- S2 designates output device (output P area) .

(2) example of program

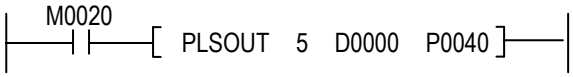

when the M0020 is ‘On’ ,it outputs the pulse at 5 pattern to P0040.

It stores the output pulse count no. at D0000 and D0001.

It stores error information at D0002.

All output area is designated for pulse output contact , but it can’t designate over 2 contact at the same time.

(3) instruction Error List

Error status	Contents	Treatment
00	Normal	-
01	Other PLSOUT instruction pulsating.	Change the other PLCOUT program.
02	Velocity designation error (more than 2000, not a multiple of 50, designated 0)	Velocity designation adjustment
03	The no. of a/c velocity pulse is bigger than no. of all pulse is to output.	Acceleration adjustment
04	No output contact point where is designated to the pulse output	Output contact point designation
05	No output contact point where is designated to the direction output	Output contact point designation

9) Output Direction

Input type of servo motor driver or stepping motor driver is subdivided into 2. Output direction of control can be selected in the pulse output parameter.

(1) Selecting method of output direction

a) When driver gets input forward direction pulse and reverse direction pulse contact point, and the forward/reverse direction signals one levels.

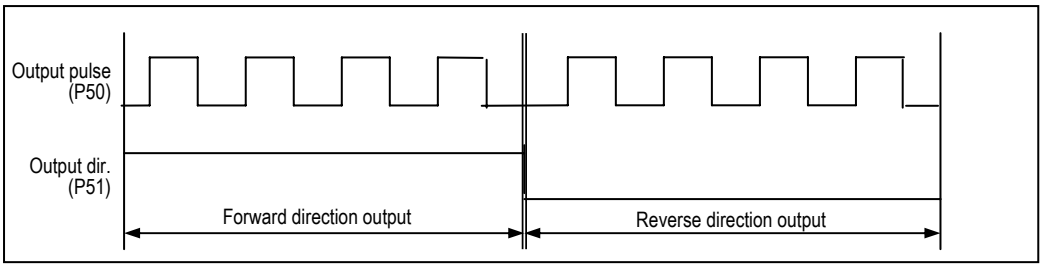

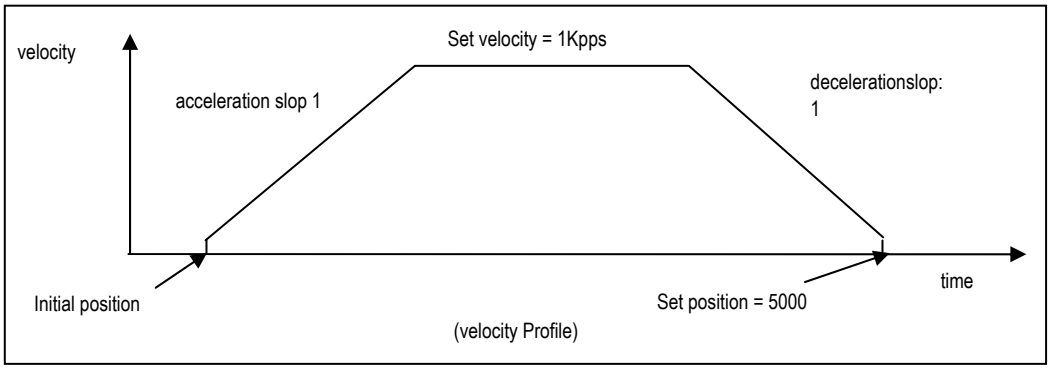

Parameter setting

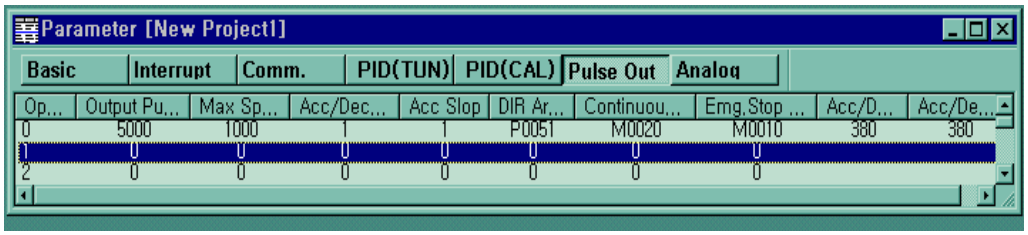

Direction contact designates P51.

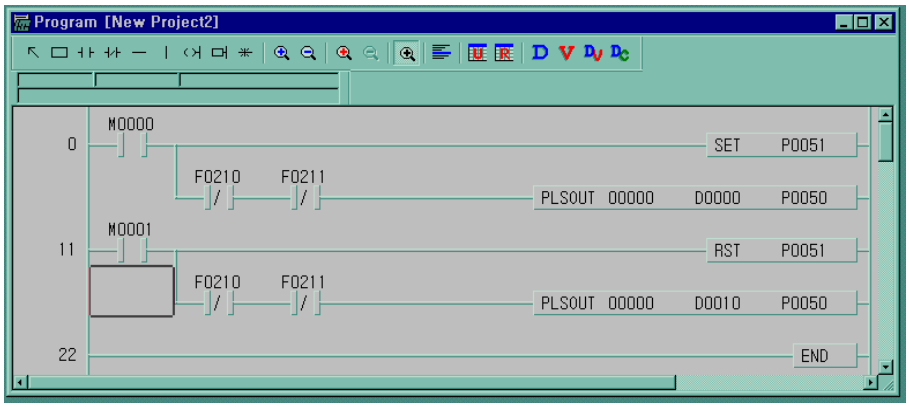

(Example of a program)

When the M000 is on, direction contact 'P51' is set, and pulse outputs at pattern '0'(forward direction output)

When the M001 is on, direction contact 'P51' is reset, and pulse outputs at pattern '0'(reverse direction output)

Be careful If direction bit use another purpose , pulse output operates abnormally.

b) Driver gets input forward direction pulse and reverse direction pulse through different contact points.

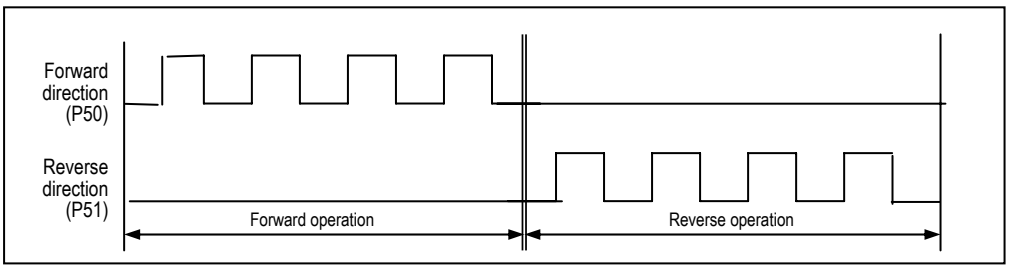

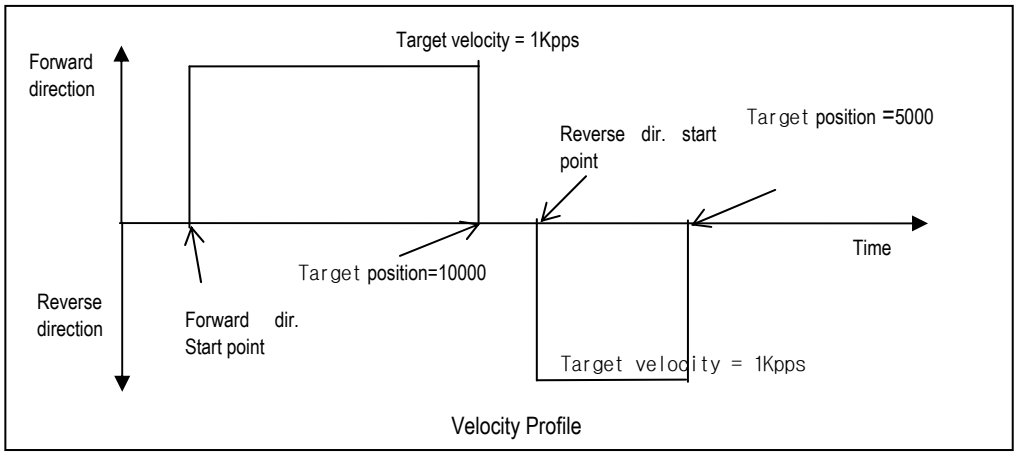

Parameter setting

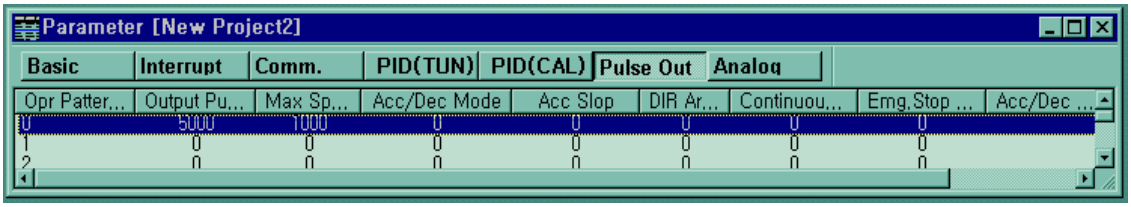

Program

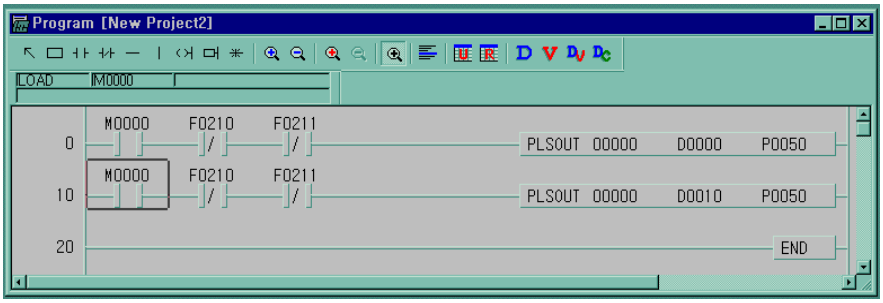

F210 turns on while the pulse output is operating.

7.1.3. Pulse Catch Function

In the base unit, 8 points of pulse catch input contact points(P000 ~ P007) are internalized. Through using this contact point short pulse signal, short as 0.2ms, can be taken which can not be executed by general digital input.

1) Usage

When narrow width of pulse signal is input, a trouble occurs which can not be detected by general digital input, so the operation does not perform as user's intention. But in this case through pulse catch function even narrow interval of pulse signal as 0.2ms min can be detected.

2) Operating Explanation

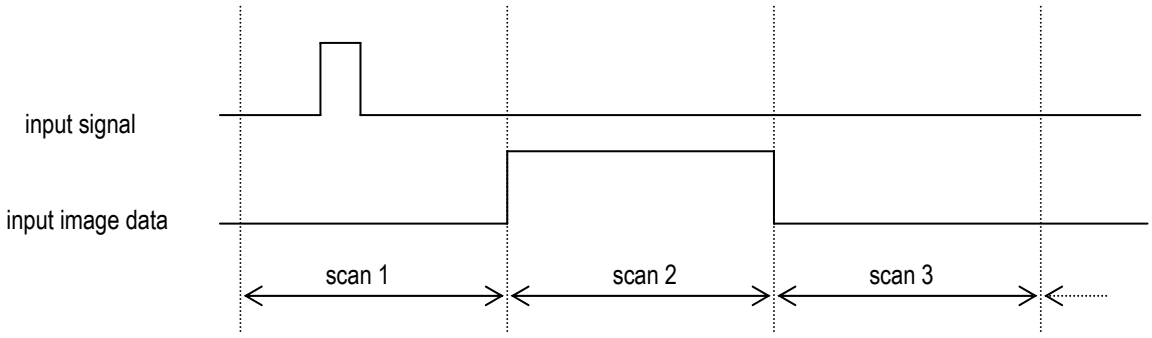

step	executing contents
scan1	CPU senses input when pulse signal, min. 0.2ms, is input, then saves the status.
scan2	used to turn on the region of input image
scan3	used to turn off the region of input image

3) using method

(1) click twice the basic parameter on the project window of KGLMIN

(2) Select no. to use for pulse catch input of the basic parameter window.

For details of KGLWIN refers to the manual.

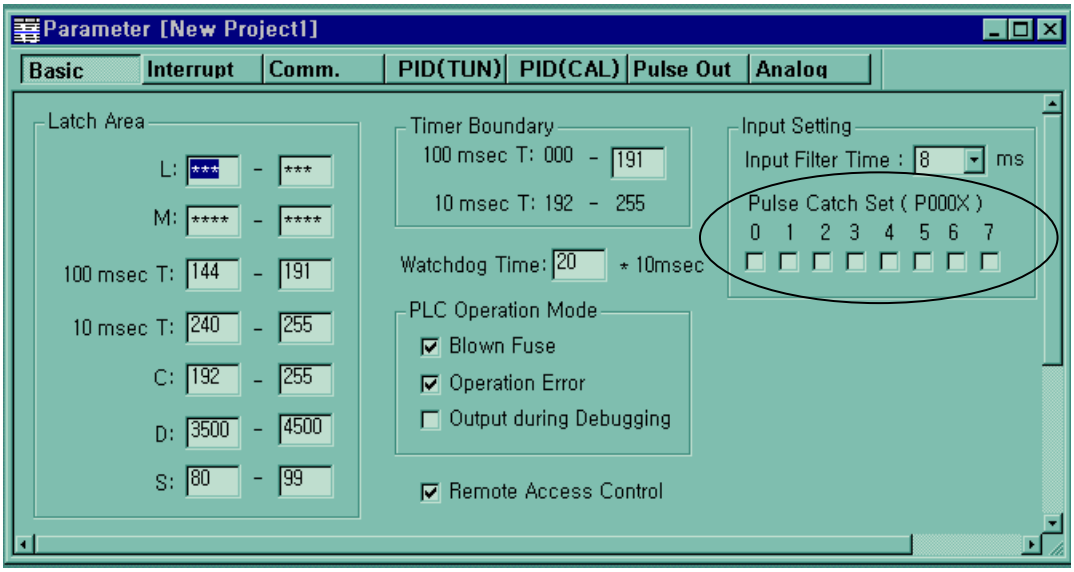

Remark

1) 8 points can be used to designate the pulse catch input. The input address is from P000 to P007.
2) General digital input operates if it is not designated as pulse catch input.

7.1.4. Input Filter Function

External input of MK80S selects input on/off delay time from the range of 0-15ms of KGLWIN. Credibility secured system may be established by adjustment of input correction no. through using environment.

1) Usage

Input signal status affects to the credibility of system in where noise occurs frequently or pulse width of input signal affects as a crucial factor. In this case the user sets up the proper input on/off delay time, then the trouble by miss operation of input signal may be prevented because the signal which is shorter than set up value is not adopted.

2) Operating Explanation

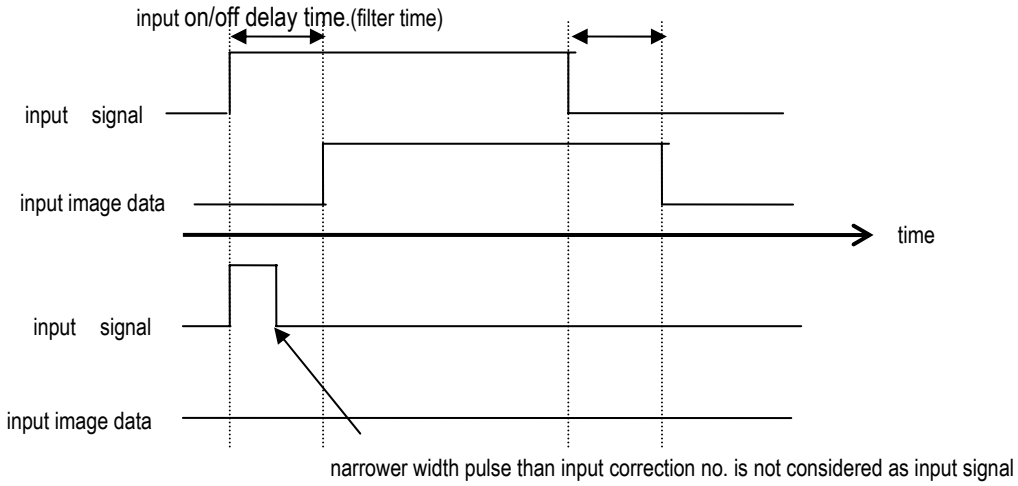

3) Using method

(1) Click twice the basic parameter on the project window of KGLWIN.

(2) The value of filter can be set up as unit of 1ms to the input on/off delay time of the basic parameter window.(Input on/off delay time is set up as default value of 8ms)

(3) Set up input on/off delay time is conformed to all input is used.

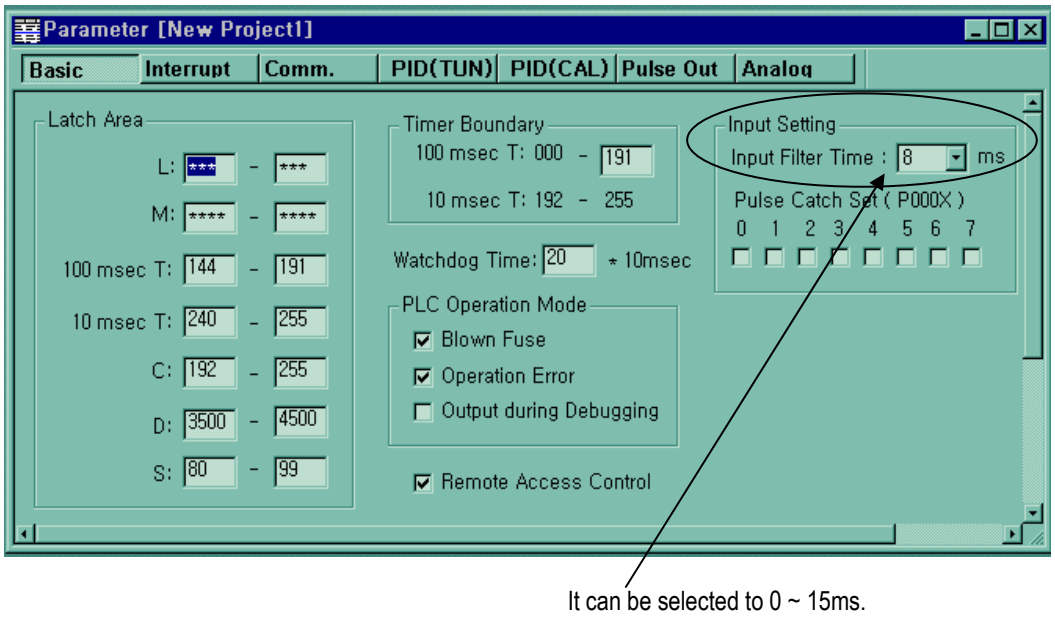

7.1.5 PID control function

1) Introduction

This chapter will provide information about the built-in PID (Proportional Integral Differential) function of MK80S Basic Unit. The MK80S series does not have separated PID module like MK300S and MK1000S series, and the PID function is integrated into the Basic Unit.

The PID control means a control action in order to keep the object at a set value (SV). It compares the SV with a sensor measured value (PV : Present Value) and when a difference between them (E : the deviation) is detected, the controller output the manipulate value (MV) to the actuator to eliminate the difference. The PID control consists of three control actions that are proportional (P), integral (I), and differential (D).

The characteristics of the PID function of MK80S is as following;

- the PID function is integrated into the CPU module. Therefore, all PID control action can be performed with instruction (PID8,PID8AT) without any separated PID module.
- Forward / reverse operations are available
- P operation, PI operation, PID operation and On/Off operation can be selected easily.
- The manual output (the user-defined forced output) is available.
- By proper parameter setting, it can keep stable operation regardless of external disturbance.
- The operation scan time (the interval that PID controller gets a sampling data from actuator) is changeable for optimizing to the system characteristics.

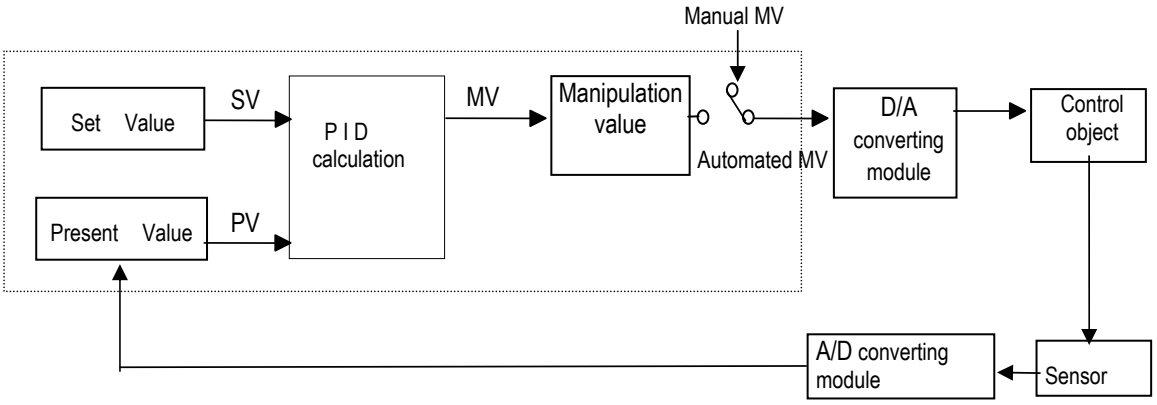

<Figure 1-1> Block diagram of PID control system

2) Specification

(1) Control operation

a) Proportional operation (P operation)

(a) P action means a control action that obtain a manipulate value which is proportional to the deviation (E : the difference between SV and PV)

(b) The deviation (E) is obtained by multiplying a reference value to the actual difference between SV and PV. It prevents the deviation from a sudden change or alteration caused by external disturbance. The formula of deviation is as following;

$$MV = Kp \times [b \times SV - PV]$$

Kp : the proportional constant (gain)
b: reference value
SV: set value
PV: present value

(c) When E happens, MV by P operation is like <Fig 2-1>

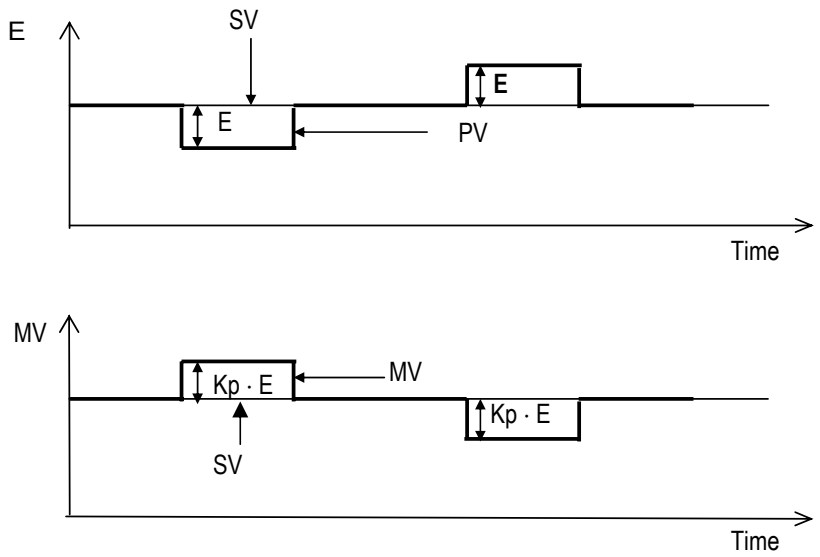

<Fig 2-1> MV by P operation

(d) If the Kp is too large, the PV reaches to the SV swiftly, but it may causes a bad effect like oscillations shown in the Fig. 2.2.

(e) If the Kp is too small, oscillation will not occur. However, the PV reaches to the SV slowly and an offset may appear between PV and SV shown in the Fig. 2.3.

(f) The manipulation value (MV) varies from 0 to 4,000. User can define the maximum value of MV (MV_MAX) and minimum value (MV_MIN) within the range 0 ~ 4,000.

(g) When an offset remains after the system is stabilized, the PV can be reached to the SV by adding a certain value. This value is called as bias value, and user can define the bias value

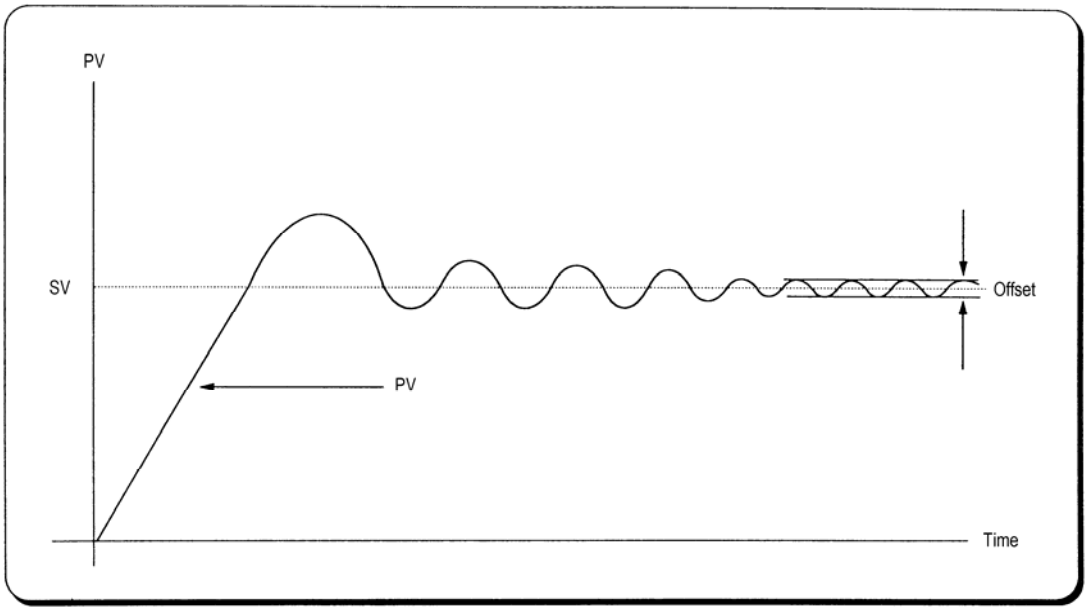

Fig. 2.2 When the proportional constant (Kp) is large

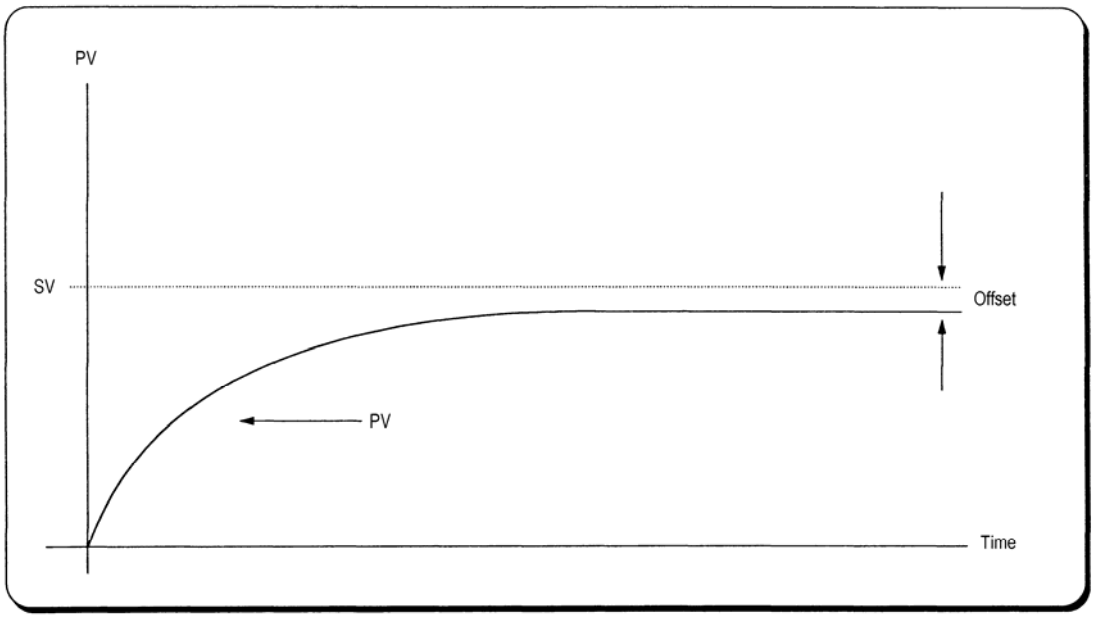

Fig. 2.3 When the proportional constant (Kp) is small

b) Integral operation (I operation)

(a) With integral operation, the manipulate value (MV) is increased or decreased continuously in accordance time in order to eliminate the deviation between the SV and PV. When the deviation is very small, the proportional operation can not produce a proper manipulate value and an offset remains between PV and SV. The integral operation can eliminate the offset value even the deviation is very small.
The period of the time from when the deviation has occurred in I action to when the MV of I action become that of P action is called Integration time and represented as Ti.

(b) Integral action when a constant deviation has occurred is shown as the following Fig. 2.4.

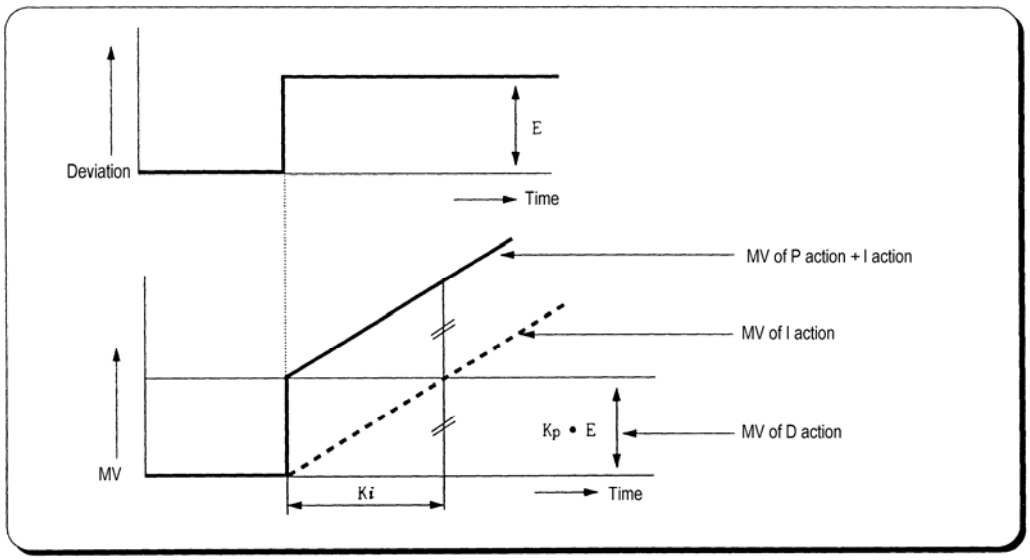

Fig. 2.4 The integral action with constant deviation

(c) The expression of I action is as following;

$$MV = \frac{Kp}{Ti}\int Edt$$

As shown in the expression, Integral action can be made stronger or weaker by adjusting integration time (K_i) in I action.
That is, the more the integration time (the longer the integration time) as shown in Fig. 2.5, the lesser the quantity added to or subtracted from the MV and the longer the time needed for the PV to reach the SV.
As shown in Fig. 2.6, when the integration time given is short the PV will approach the SV in short time since the quantity added or subtracted become increased. But, If the integration time is too short then oscillations occur, therefore, the proper P and I value is requested.

(d) Integral action is used in either PI action in which P action combines with I action or PID action in which P and D actions combine with I action.

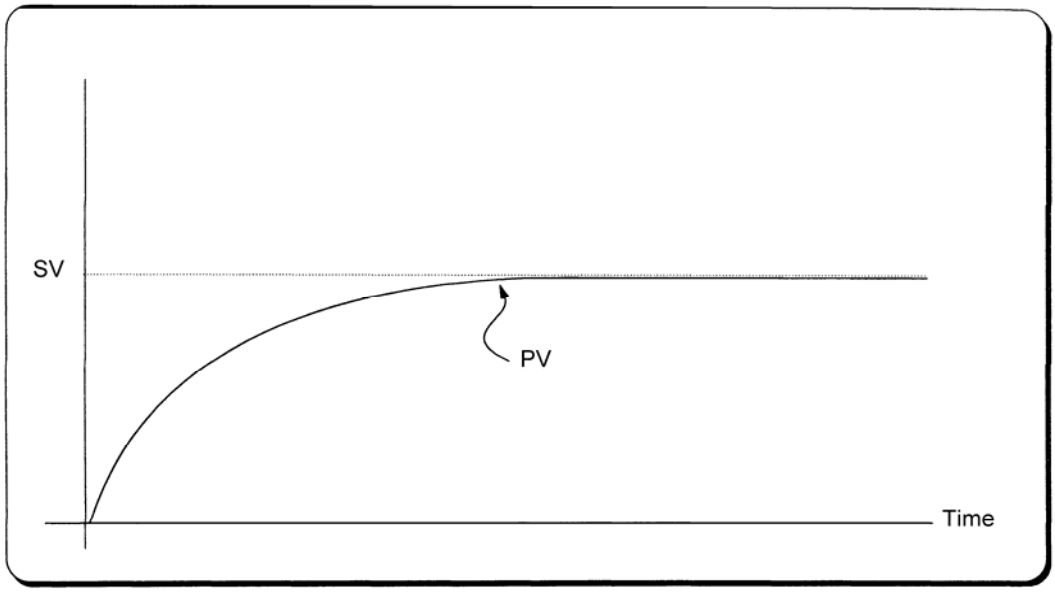

Fig. 2.5 The system response when a long integration time given

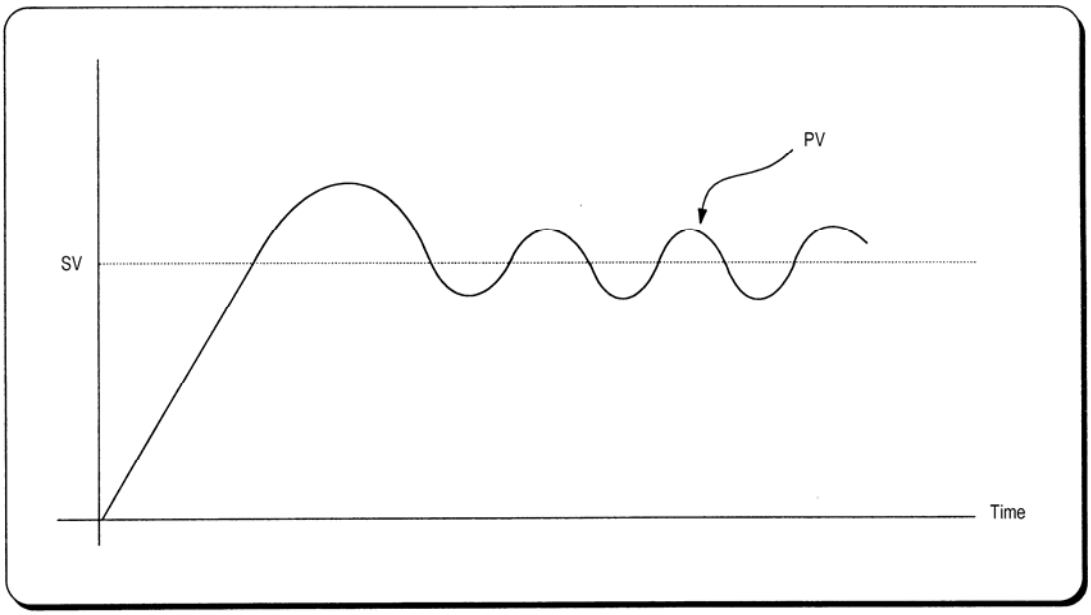

Fig. 2.6 The system response when a short integration time given

c) Derivative operation (D action)

(a) When a deviation occurs due to alteration of SV or external disturbances, D action restrains the changes of the deviation by producing MV which is proportioned with the change velocity (a velocity whose deviation changes at every constant interval) in order to eliminate the deviation.

- D action gives quick response to control action and has an effect to reduce swiftly the deviation by applying a large control action (in the direction that the deviation will be eliminated) at the earlier time that the deviation occurs.
- D action can prevent the large changes of control object due to external conditions.

(b) The period of time from when the deviation has occurred to when the MV of D action become the MV of P action is called derivative time and represented as Kd.

(c) The D action when a constant deviation occurred is shown as Fig. 2.7.

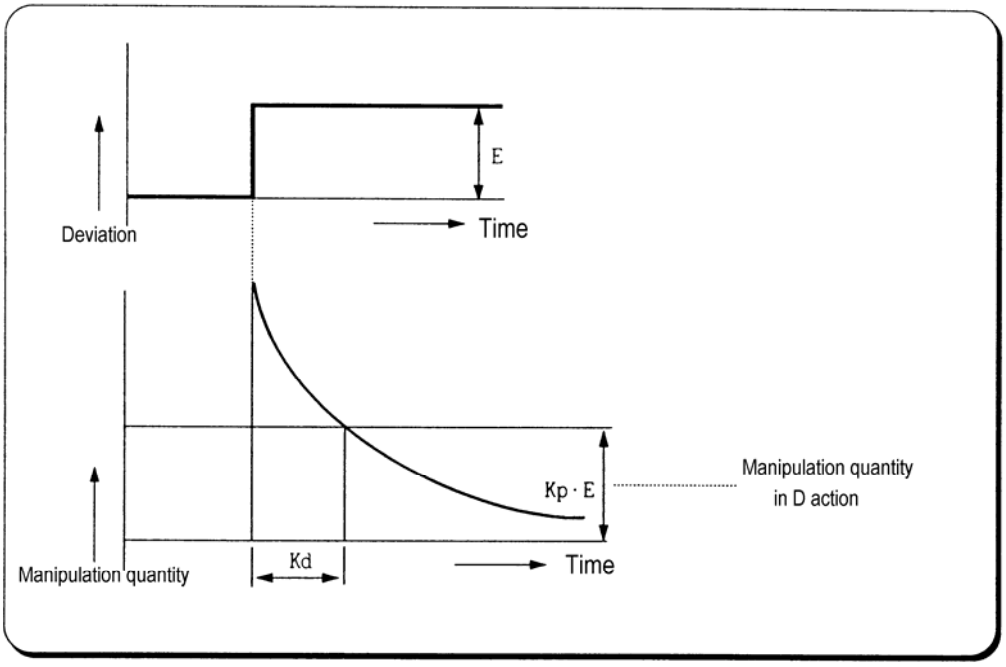

Fig. 2-7 Derivative action with a constant deviation

(d) The expression of D action is as following;

$$MV = Kp \times Td \frac{dE}{dt}$$

(e) Derivative action is used only in PID action in which P and I actions combine with D action.

d) PID action

(a) PID action controls the control object with the manipulation quantity produced by (P+I+D) action

(b) PID action when a given deviation has occurred is shown as the following Fig. 2.8.

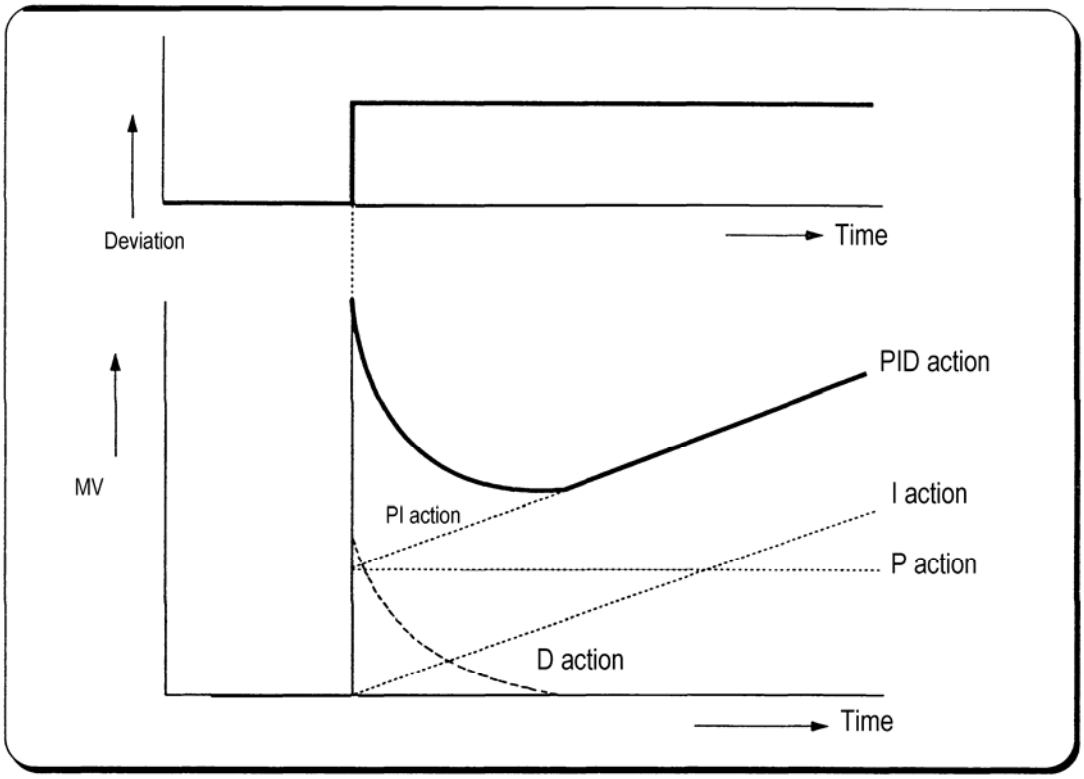

Fig. 2-8 PID action with a constant deviation

e) Forward / Reverse action

(a) PID control has two kind of action, forward action and reverse action. The forward action makes the PV reaches to SV by outputting a positive MV when the PV is less than SV.

(b) A diagram in which forward and reverse actions are drawn using MV, PV and SV is shown as Fig. 2.9.

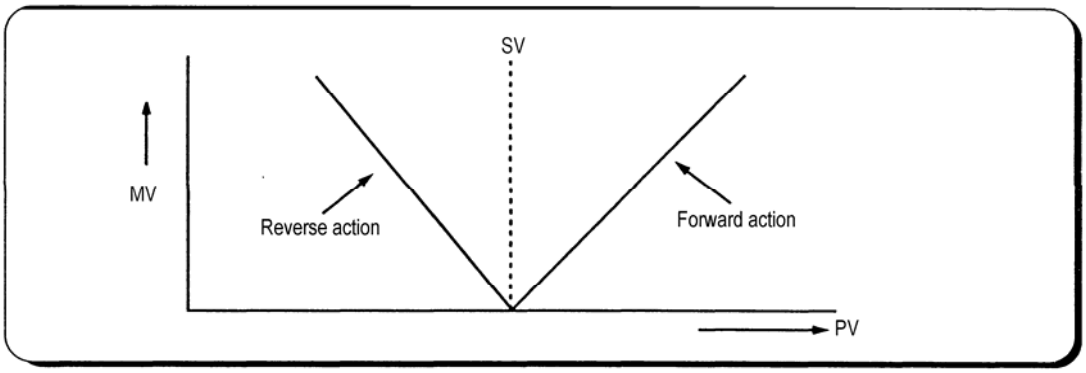

Fig. 2-9 MV of forward / reverse action

(c) Fig 2.10 shows examples of process control by forward and reverse actions, respectively.

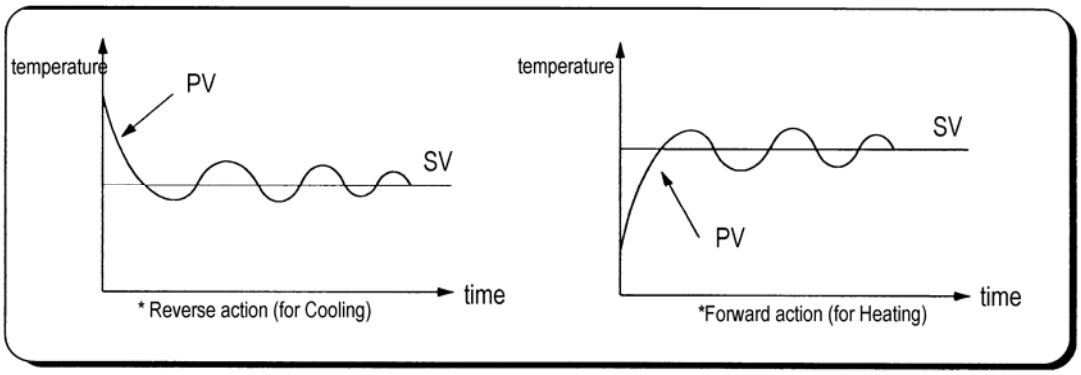

Fig. 2-10 PV of forward / reverse action

f) Reference value

In general feedback control system shown as the Figure 2-10, the deviation value is obtained by the difference of PV and SV. P, I, and D operations are performed based on this deviation value. However, each of P, I, and D operations use different deviation values according to the characteristics of each control actions. The expression of PID control is as following;

$$MV = K\left[Ep + \frac{1}{Ti}\int_0^t Ei(s)ds + Td\frac{dEd}{dt} \right]$$

MV : Manipulate value
K: Proportional gain
Ti: Integral time
Td: Derivative time
Ep: Deviation value for proportional action
Ei: Deviation value for integral action
Ed: Deviation value for derivative action

The deviation values of P, I, and D action is described as following equations;

$$Ep = b \times SV - PV$$
$$Ei = SV - PV$$
$$Ed = -PV$$

The b of the first equation is called as reference value. It can be varied according to the load disturbance of measurement noise.

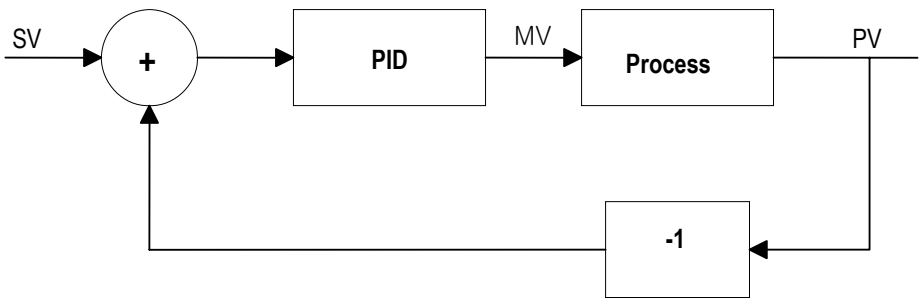

Fig. 2-11 Diagram of simple feedback system

The figure 2.11 shows the variation of PV according to the several different reference values (b). As shown in the Fig. 2.11, the small reference value produces small deviation value, and it makes the control system response be slow.
In general, control system is required to be adaptable to various external / internal changes. Especially, it should shows a stable transient response with the sudden change of the SV to be robust to load disturbances and/or measurement noise.

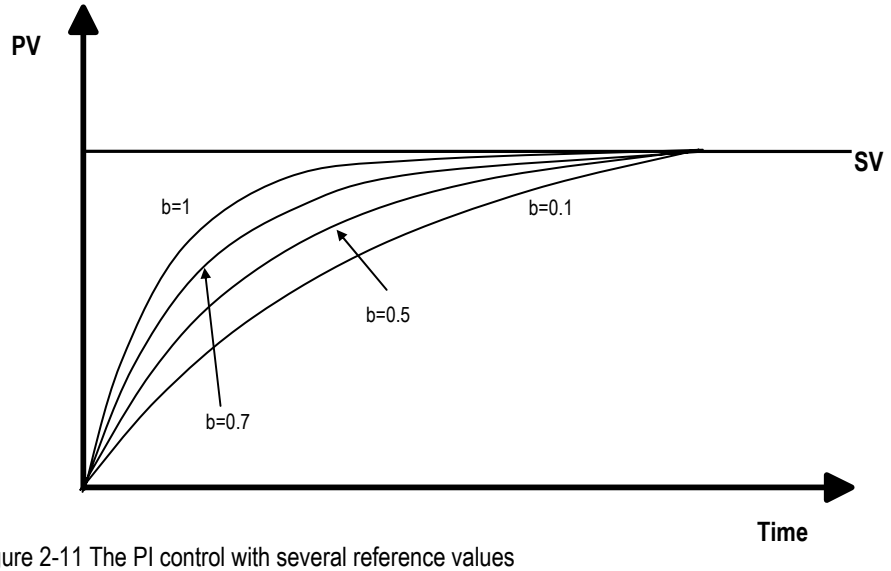

Figure 2-11 The PI control with several reference values

g) Integral windup

All devices to be controlled, actuator, has limitation of operation. The motor has speed limit, the valve can not flow over the maximum value. When the control system has wide PV range, the PV can be over the maximum output value of actuator. At this time, the actuator keeps the maximum output regardless the change of PV while the PV is over the maximum output value of actuator. It can shorten the lifetime of actuator.
When the I control action is used, the deviation term is integrated continuously. It makes the output of I control action very large, especially when the response characteristic of system is slow.
This situation that the output of actuator is saturated, is called as 'windup'. It takes a long time that the actuator returns to normal operating state after the windup was occurred.
The Fig. 2-12 shows the PV and MV of PI control system when the windup occurs. As shown as the Fig. 2-12, the actuator is saturated because of the large initial deviation. The integral term increase until the PV reaches to the SV (deviation = 0), and then start to decrease while the PV is larger than SV (deviation < 0). However, the MV keeps the saturated status until the integral term is small enough to cancel the windup of actuator. As the result of the windup, the actuator will output positive value for a while after the PV reached to the SV, and the system show a large overshoot. A large initial deviation, load disturbance, or mis-operation of devices can cause windup of actuator.

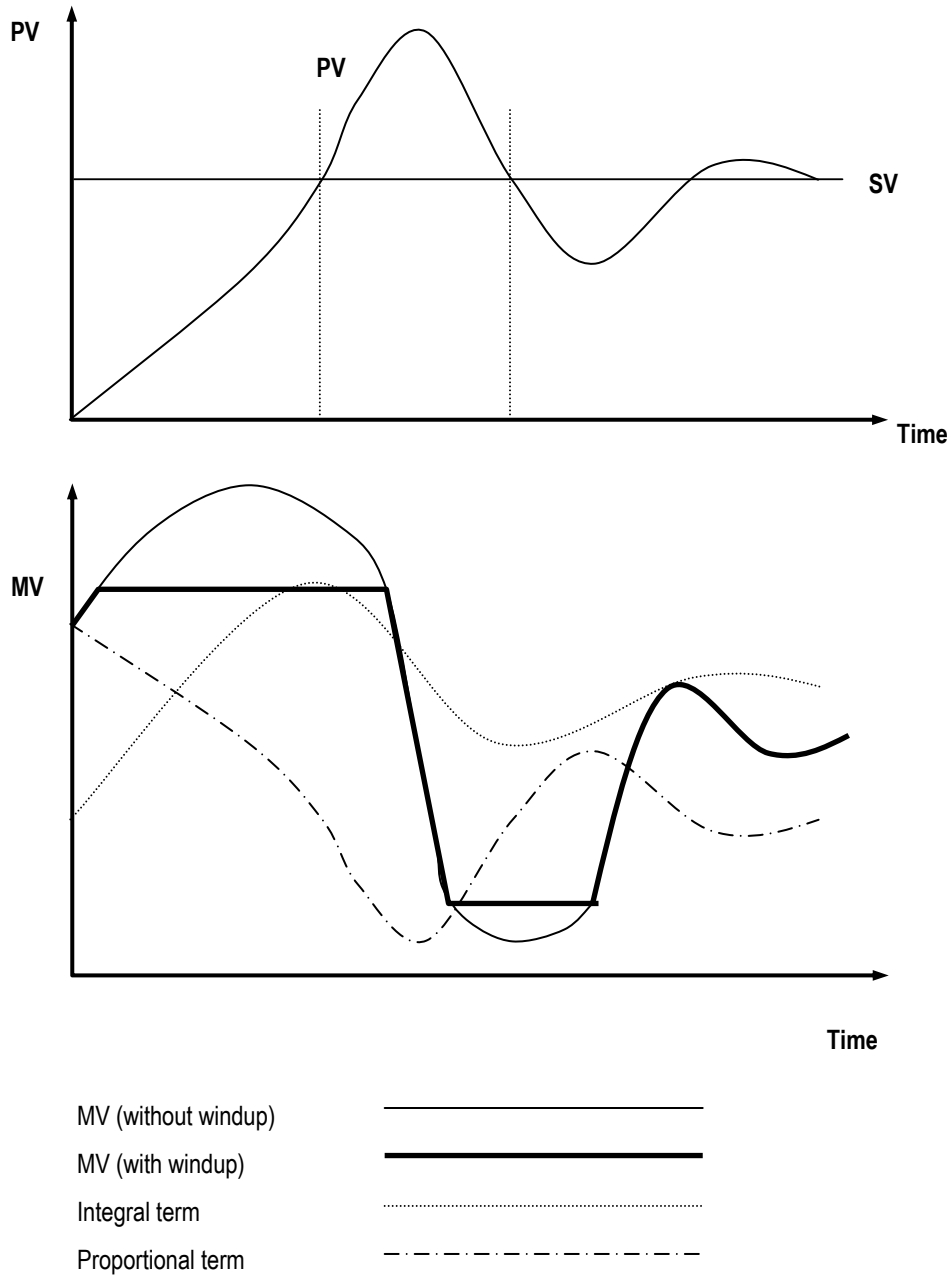

There are several methods to avoid the windup of actuator. The most popular two methods are adding another feedback system to actuator, and using the model of actuator. The Fig. 2-13 shows the block diagram of the anti-windup control system using the actuator model.
As shown in the Fig. 2-13, the anti-windup system feedback the multiplication of gain (1/Tt) and Es to the input of integral term. The Es is obtained as the difference value between actuator output (U) and manipulation value of PID controller (MV). The Tt of the feedback gain is tracking time constant, and it is in inverse proportion with the resetting speed of integral term. Smaller Tt will cancel the windup of actuator faster, but too small Tt can cause anti-windup operation in derivative operation. The Fig. 2-14 shows several Tt value and PV in the PI control system.

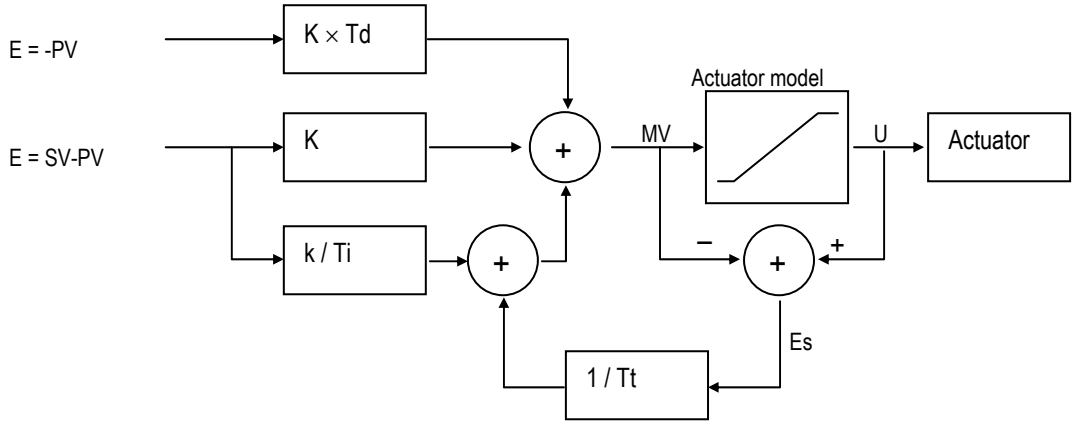

Fig. 2-13 The block diagram of anti-windup control system

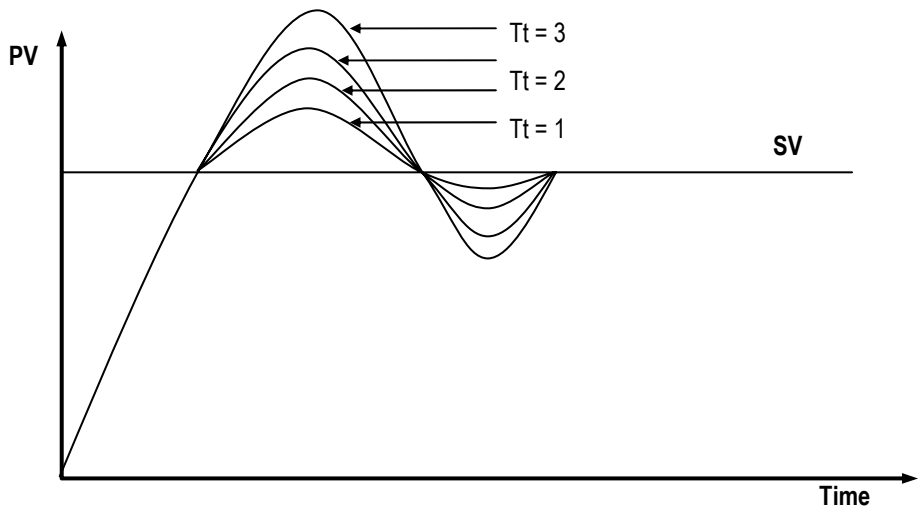

Fig. 2-14 The PV output characteristics with different Tt values.

(2) Realization of PID control on the PLC

In this chapter, it will described that how to get the digitized formula of the P, I, and D terms. Then, the pseudo code of PID control will be shown.

a) P control

The digitized formula of P control is as following;

$P(n) = K[b \times SV(n) - PV(n)]$ n : sampling number

K : proportional gain constant
b : reference value
SV : set value
PV : present value

b)I control

The continuous formula of I control is as following;

$I(t) = \frac{K}{Ti}\int_0^t e(s)ds$ I(t) : integral term

K : proportional gain constant
Ti : integral time
e(s) : deviation value
By deviation about t, we can obtain;

$$\frac{dI}{dt} = \frac{K}{Ti} e$$ e = (SV – PV) : deviation value

The digitized formula is as following;

$$\frac{I(n+1) - I(n)}{h} = \frac{K}{Ti} e(n)$$ h : sampling period

$$I(n+1) = I(n) + \frac{Kh}{Ti} e(n)$$

c) D control

The continuous formula of derivative term is as following;

$$\frac{Td}{N} \times \frac{d}{dt} D + D = -KTd \frac{dy}{dt}$$

N : high frequency noise depression ration
y : the object to be controlled (PV)

The digitized formula is as following (Use Tustin approximation method)

$$D(n) = \frac{2Td - hN}{2Td + hN} D(n-1) - \frac{2KTdN}{2Td + hN} \left[y(n) - y(n-1) \right]$$

d) Pseudo code of PID control

The pseudo code of PID control is as following;

- Step 1 : Get constants that are used for PID operation

$$Bi = K \times \frac{h}{Ti}$$: integral gain

$$Ad = \frac{(2 \times Td - N \times h)}{(2 \times Td + N \times h)}$$: derivation gain

$$Bd = \frac{(2 \times K \times N \times Td)}{(2 \times Td + N \times h)}$$

$$A0 = \frac{h}{Tt}$$: anti-windup gain

- Step 2 : Read SV and PV value
  PV = adin(ch1)
- Step 3: Calculate the proportional term.
  P = K × (b × SV – PV)
- Step 4 : Update the derivative term. (initial value of D = 0)
  D = As × D – Bd × (PV – PV_old)
- Step 5 : Calculate the MV. (initial value of I = 0)
  MV = P + I + D
- Step 6 : Check the actuator is saturated or not.
  U = sat(MV, U_low, U_high)
- Step 7 : Output the MV value to the D/A module
- Step 8 : Update the integral term.
  I = I + bi × (SV – PV) + A0 × (U – MV)
- Step 9 : Update the PV_old value.
  PV_old = PV

3) Instruction and parameter setting

For the PID operation of MK80S, following 2 instruction are included in the KGLWIN software. (version 2.0 or later)

No.	Name	Description
1	PID8	Perform the PID operation
2	PID8AT	Perform the auto tuning operation

Remarks

1.Refer the KGLWIN manual for the parameter setting.

(1) Parameter setting and explanation

a) PID8 instruction parameter setting and explanation.

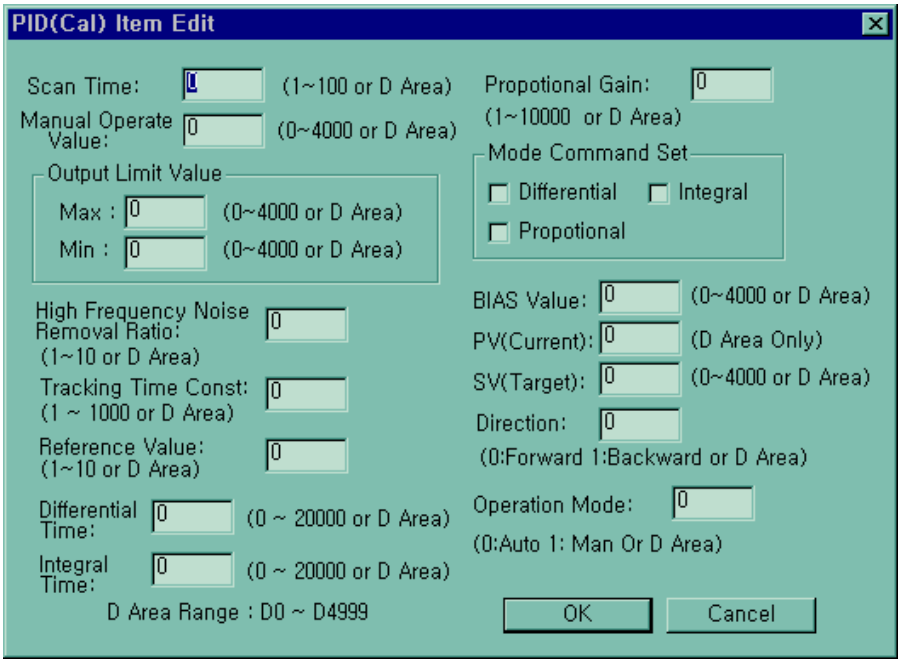

(a) Scan time

scan time is the period of reading data (sampling), and also 10 times scaled up. Generally, it should be synchronized with external trigger input (EN input of function block) to perform proper PID operation. The range of sampling time is 0.1 ~ 10 seconds, and actual input range is 0 ~ 100.

(b) Manual operate value

When manual operation is designates , manual operation value designates.(input range : 0 ~ 4000)

(c) High frequency noise removal ratio

high frequency noise removal ratio is used for derivative control operation, and shows the ratio of high frequency noise depression. If there is a lot of high frequency noise in the control system, select the value as higher value. Otherwise, leave the 1. The range of parameter is 0 ~ 10 and it is not scaled up, so input the designated value directly.(it is possible that parameter value designates 'D' area also)

Be careful. if designating 'D' area value and designating value directly over 10 , system operate abnormally.

(d) Tracking time constant

TT (tracking time constant) parameter is used to designate anti_reset windup operation. The range of TT is 0.01 ~ 10 and the actual input range that are 100 times scaled up is 0 ~ 1000

(e) Reference value

Reference value may be useful parameter according to the control system type, especially velocity, pressure, or flux control system. The Reference value input is also 10 times scaled up, and the actual range is 0 ~ 10.

(f) Differential time and integral time

I_TIME and D_TIME are 10 times scaled up. For example, input 18894 if the designated I_TIME value is 1889.4. The range of actual input is 0 ~ 20000.

(it is possible that parameter value designates 'D' area also)

(g) Proportional gain

The MK80S can handle only integer, not the floating point type. Therefore, to enhance the accuracy of PID operation, the PID8 instruction is designed to input the P_GAIN data as the 100 times scaled up. For example, if the designated P_GAIN is 98, actual input data of P_GAIN should be 9800. If the designated P_GAIN is 10.99, input 1099 to the P_GAIN.

(h) Mode command set

In MK80S, only the following 4 operation modes are available. Other operation modes, such as PD or I, are not permitted.

No.	EN_P	EN_I	EN_D	Operation
1	1 (enable)	0 (disable)	0 (disable)	P operation
2	1 (enable)	1 (enable)	0 (disable)	PI operation
3	1 (enable)	1 (enable)	1 (enable)	PID operation
4	0 (disable)	0 (disable)	0 (disable)	On/Off operation

(i) Bias value

The Bias data is used for the compensation of offset in the proportional control.

(j) SV(Target)

SV (setting value : the designated value) and PV (process value : present value) of MK80S PID operation have the range 0 ~ 4000. The range is set with the consideration of the resolution of A/D and D/A module of MK80S series (12bits) and offset value.

The following table shows error codes and descriptions of PID8 instruction.

Error code (STAT output)	Description	Countermeasure
0	Normal operation	
1	SV is out of range	Change the SV within 0 ~ 4000
2	MVMAN is out of range	Change the MVMAN within 0 ~ 4000
3	P_GAIN is out of range	Change the P_GAIN within 0 ~ 10000
4	I_TIME is out of range	Change the I_TIME within 0 ~ 20000
5	D_TIME is out of range	Change the D_TIME within 0 ~ 20000
6	S_TIME is out of range	Change the S_TIME within 0 ~ 100
7	REF is out of range	Change the REF within 0 ~ 10
8	TT is out of range	Change the TT within 0 ~ 1000
9	N is out of range	Change the N within 0 ~ 1000
10	EN_I and/or EN_D is set as 1 when EN_P is 0	Only P, PI, and PID controls are available. Please change the setting of EN_P, EN_I, and EN_D.

Remark

1. Please be careful to input 100 times scaled up values for P_GAIN and TT.
2. I_TIME, D_TIME, S_TIME, and REF are 10 times scaled up, not 100 times.

b) PID8AT instruction parameter setting and explanation.

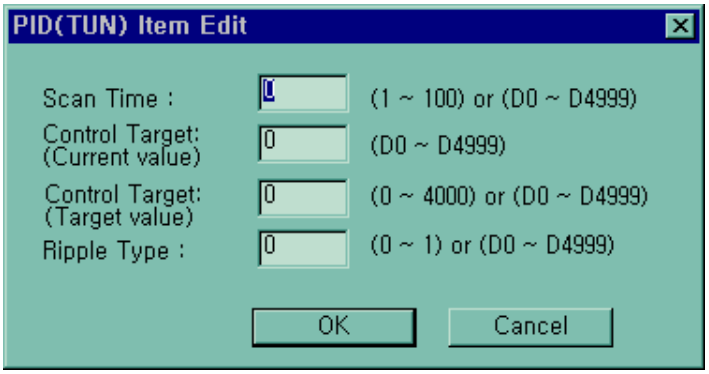

(a) Scan time

S_TIME is the period of reading data (sampling), and 10 times scaled up for more precious operation. Generally, it should be synchronized with external trigger input to perform proper PID operation.
The range of sampling time is 0.1 ~ 10 seconds, and actual input range is 0 ~ 100.

(b) Control target(SV)

SV (setting value : the designated value) and PV (process value : present value) of MK80S PID operation have the range 0 ~ 4000. The range is set with the consideration of the resolution of A/D and D/A module of MK80S series (12 bits) and offset value. When setting the SV or PV, please be careful convert the analog value of control object (temperature, velocity, etc.) to digital value that are the output of A/D convert module. For example, assume that PID control is used for temperature control with Pt100 (operation range : 0 °C ~ 250 °C), and the goal value is 100 °C. The equivalent digital output of A/D module (voltage output range : 1 ~ 5V) is 1600 if the A/D module outputs 0 (1V) with 0 °C, and 4000(5V) with 250 °C. Therefore, the input of SV should be 1600, not 2.

(c) Ripple type

The MK80S perform auto-tuning operation based on the frequency response method. PID parameters are obtained by On/Off operation during 1 cycle of PV variation. The RIPPLE parameter shows at which cycle the CPU module will perform auto-tuning operation. If 0 is selected, the CPU will get PID parameters during the first cycle of PV variation. If 1 is selected, the second cycle will be used. (refer Fig. 3-1 for detailed information) Other choice of RIPPLE parameter is not allowed. In general case, select 1 for proper auto-tuning operation. The On/Off operation will be occur at the 80% of PV value.

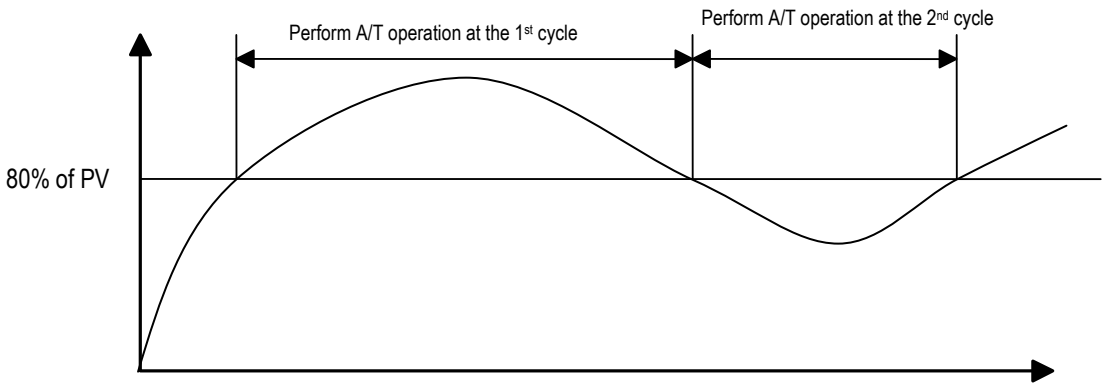

Fig.3-1 The ripple parameter

c) Error codes of auto-tuning function block (PID8AT)

The following table shows error codes and descriptions of PID8AT instruction.

Error code (STAT output)	Description	Countermeasure
0	Normal operation	
1	SV is out of range	Change the SV within 0 ~ 4000
2	PV is out of range	It may caused by fault of A/D module. Check the A/D module.
3	S_TIME is out of range	Change the S_TIME within 0 ~ 100
32	Ripple is out of range	Change the Ripple to 0 Or 1.

2) instruction

(1) PID8

Instruction		Available device											Step no.	Flag		
		M	P	K	L	F	T	C	S	D	#D	Integer		Error (F110)	Zero (F111)	Carry (F112)
PID8	n									O		O	5	O		
	S1									O						

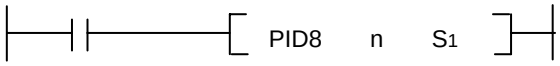

Flag Set

Error (F110)	It turns 'on' when designation area is over and the instruction isn't executed.

Designation area

n	Registration No. at parameter(0~7)
S1	execution status registration area

ν PID8(PIDCalculation)

a) Usage

- when the condition of execution is on, PID operation executes.(only rising edge condition)
- 'n' is registration No.at parameter(0 ~ 7)

b) Example program

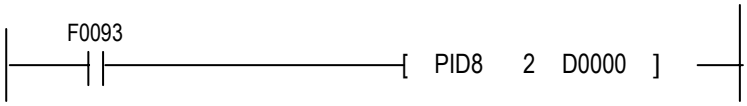

- When the input condition F0093(1second clock) is rising edge(off on) PID operation executes at no.2 parameter.
- PID execution status registrate D0000 and the output value of control result registrate D0001

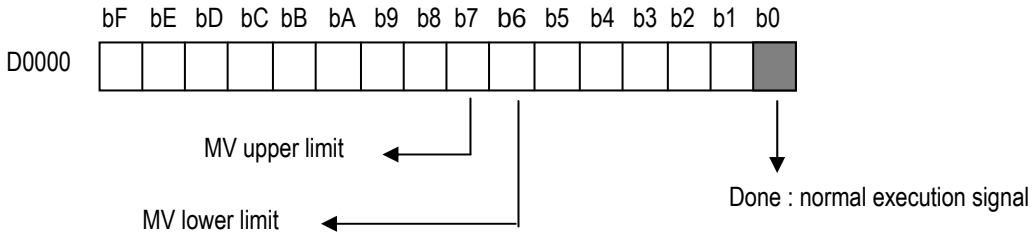

(2) PID8AT

Instruction		Available device											Step no.	Flag		
		M	P	K	L	F	T	C	S	D	#D	Integer		Error (F110)	Zero (F111)	Carry (F112)
PID8	n									O		O	5	O		
	S1									O						

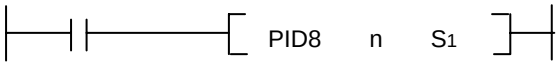

Flag Set

Error (F110)	It turns 'on' when designation area is over and the instruction isn't executed.

Designation area

n	Registration No. at parameter(0~7)
S1	execution status registration area

ν PID8AT(PID auto tuning Calculation)

a) Usage

- when the condition of execution is on, PID auto tuning operation executes.(only rising edge condition) and calculates P,I,D constant
- 'n' is registration No.at parameter(0 ~ 7)
- S1 is execution status and P,I,D constant registration area

b) Example program

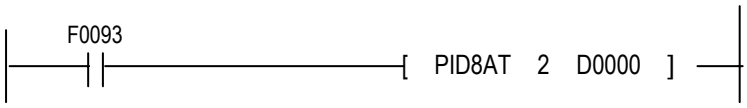

- When the input condition F0093(1second clock) is rising edge(off↑ on) PID operation executes at no.2 parameter.

- PID execution status stores D0000 and the output value of control result stores D0001 and P,I,D constant sequentially store D003(P),D004(I),D005(D)

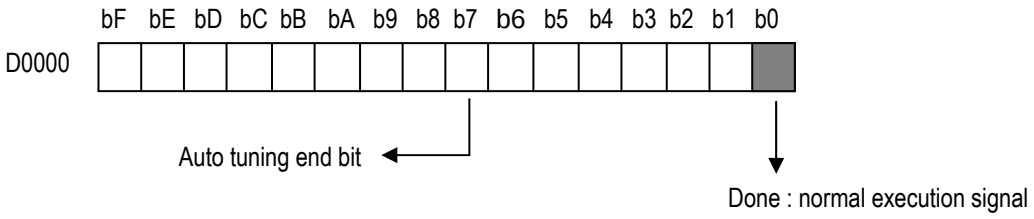

6) Program Example

(1) System configuration

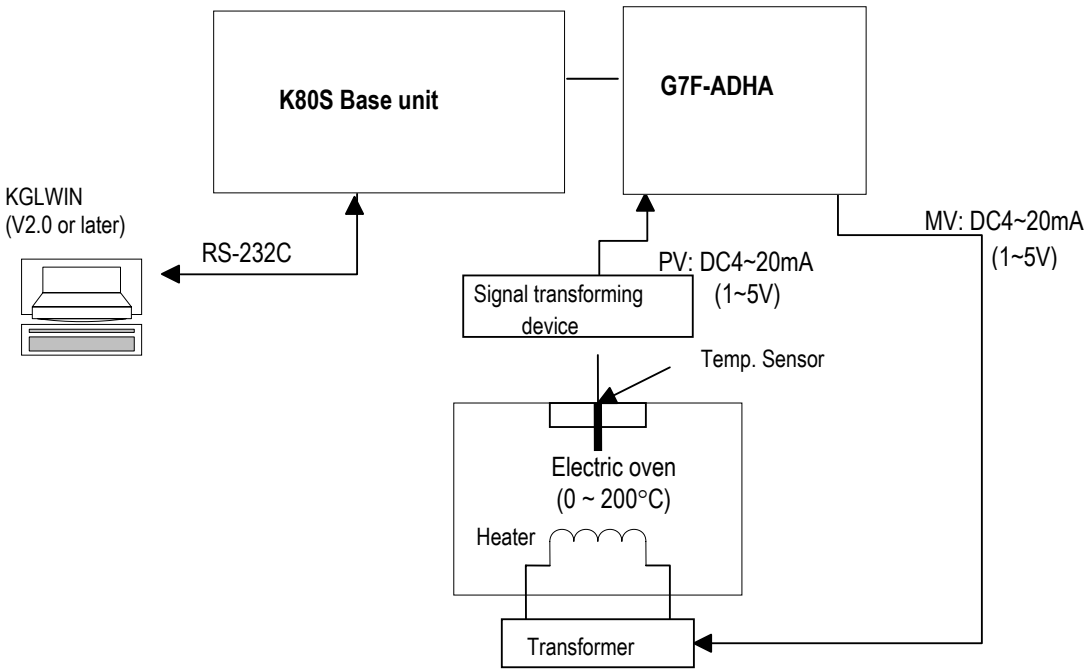

(2) Initial setting

a) PID operation parameters

- ► Auto / Manual operation setting : Auto
- ► Forward / Reverse operation : Forward
- ► SV setting : 960(60°C),1120(70°C),1280(80°C),1600 (100°C)
- ► Current value setting : D4980(AD conversion value of AD module Ch1)
- ► BIAS setting : 0 (If only P control is used, input proper value other 0)
- ► EN_P, EN_I, EN_D setting: EN_P=1, EN_I=1, EN_D=1 (PID operation)
- ► REF=10 , TT=1000 , N=1
- ► MV_MAX, MV_MIN, MVMAN: MV_MAX=4000, MC_MIN=0, MAMAN=2000
- ► S_TIME : S_TIME=100 (sampling time = 10 seconds)

b) Auto-tuning parameters

- ► PV setting: : 960(60°C),1120(70°C),1280(80°C),1600 (100°C)
- ► S_TIME: S_TIME=100 (sampling time = 10 seconds)
- ► Current value setting : D4980(AD conversion value of AD module Ch1)
- ► wave select : designation value=1

c) A/D module setting

- ► Channel setting : use channel 1
- ► input range setting : DC 4 ~ 20 mA
- ► A/D conversion data registration area : D4980
- ► Output data type: – 48 ~ 4047

d) D/A module setting

- ► output range setting: DC 4 ~ 20 mA
- ► D/A conversion data registration area : D4982

(3) Program Explanation

a) Use only PID operation (without A/T function)

(a) Convert the measured temperature (0 ~ 250°C) to current signal (4 ~ 20mA), and input the current signal to the channel 1 of A/D module. Then, the A/D module converts the analog signal to digital value (0 ~ 4000)

(b) PID8 instruction will calculate manipulate value (MV : 0 ~ 4000) based on PID parameter settings (P_GAIN, I_TIME, D_TIME, etc.) and PV from A/D module. Then, the calculated MV is output to the channel 0 of D/A module.

(c) D/A module will convert the MV (0 ~ 4000) to analog signal (4 ~ 20mA) and output to the actuator (power converter).

b) Use PID operation with A/T function

(a) Convert the measured temperature (0 ~ 250°C) to current signal (4 ~ 20mA), and input the current signal to the channel 0 of A/D module. Then, the A/D module converts the analog signal to digital value (0 ~ 4000)

(b) A/T function block will calculate manipulate value (MV : 0 ~ 4000) based on the SV and PV from A/D module. Simultaneously, the A/T module will calculate P,I and D parameters.

(c) The END output of A/T module will be 1 when the A/T operation is completed. Then, PID module will start operation with PID parameters that are calculated by A/T module.

(d) D/A module will convert the MV (0 ~ 4000) to analog signal (4 ~ 20mA) and output to the actuator (power converter).

Remark

G7F-ADHA module is supplied 2channels for A/D exchange and 1channel for D/A exchange module.

(4) parameter setting and Program

a) In case of using PID function only.

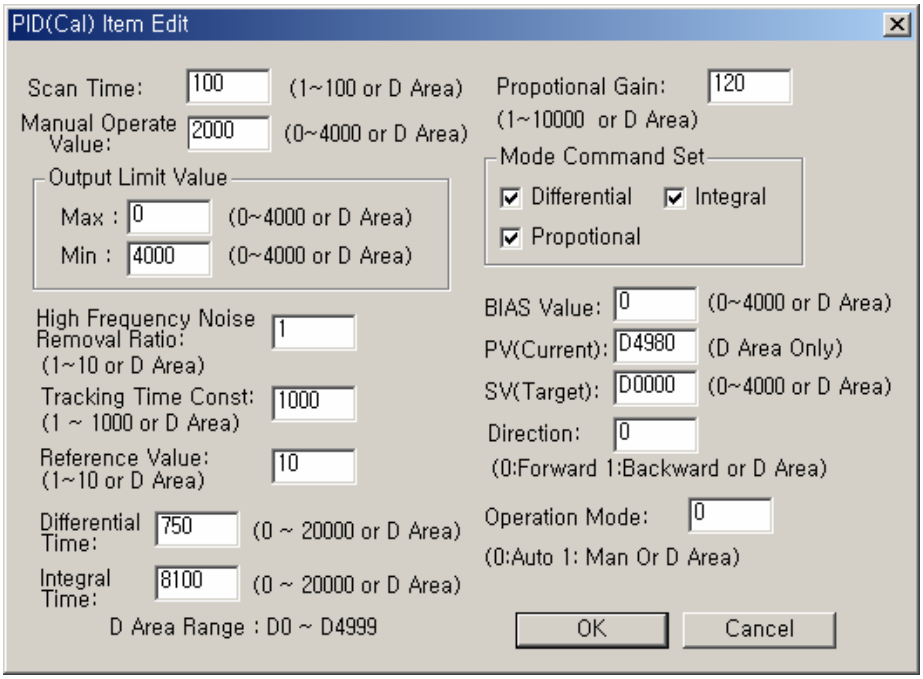

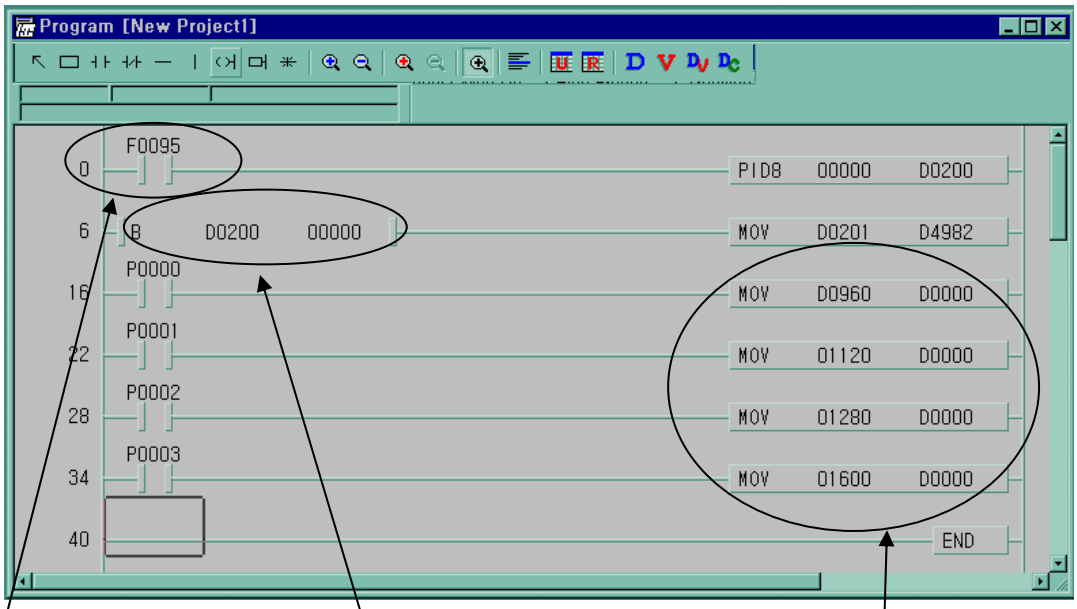

PID execution completes at 10 second each time
At that time bit 0 of D200 turns on and output MV value.

F095 is 10 second clock
PID execution scan time is equal to input clock certainly

Data move for SV setting value.
This value is moved before the PID instruction execution

b) In case of using combined function of PID operation and Auto tuning.

This program is an example of PID operation performing with computed P,I,D values by the auto tuning performing. It is performed in 80% of auto tuning SV, PID process is performed from 80% of SV.

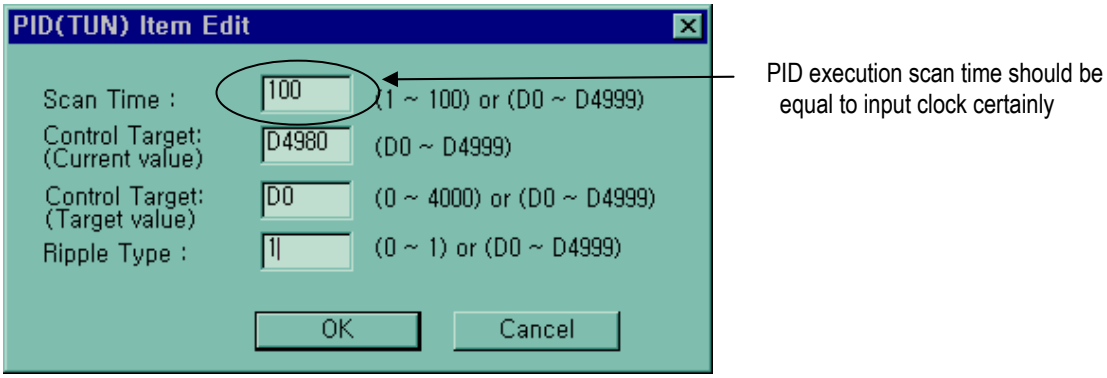

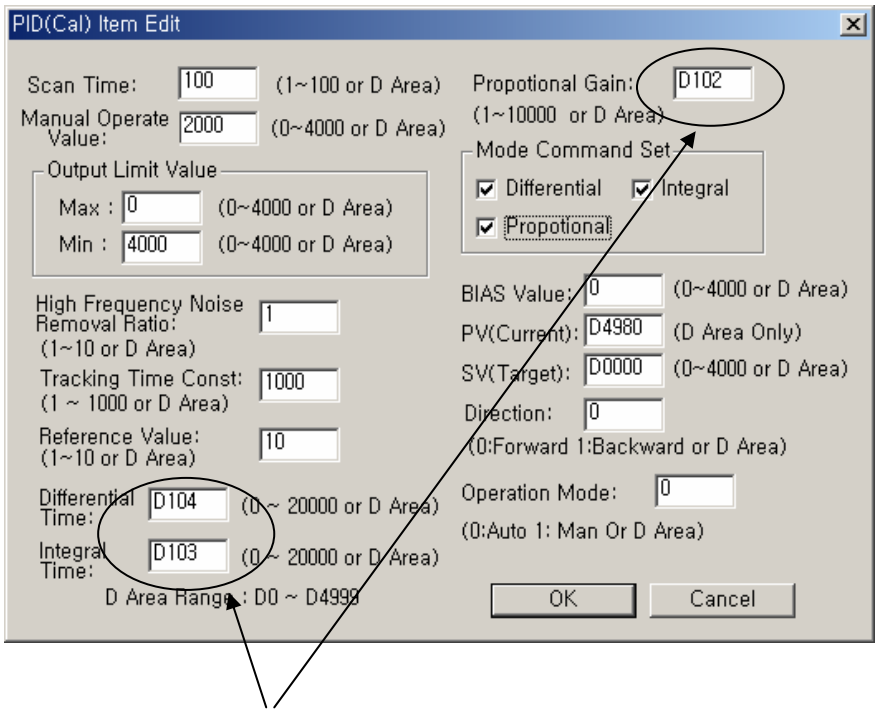

As a result of PID8AT execution, Proportional gain(P),Differential time(D),Integral time(I) are stored D0102,D0103,D0104.

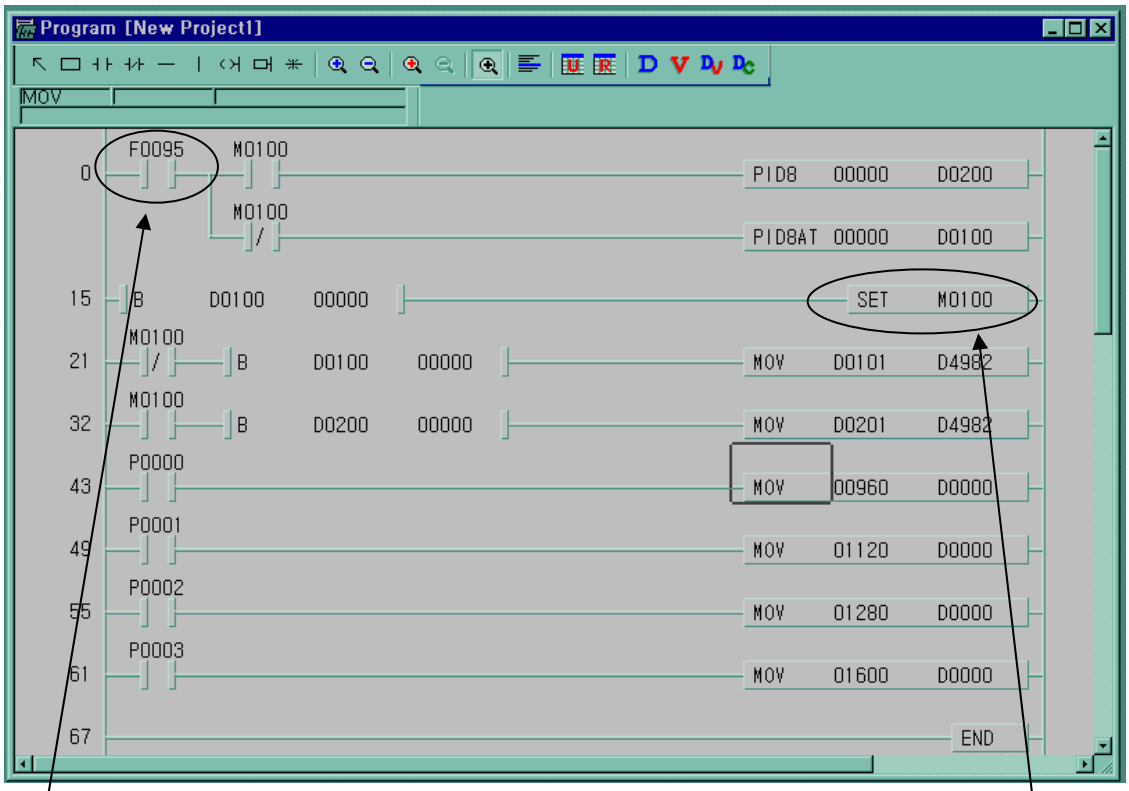

PID8 and PID8AT input period should be equal to execution scan time which is designated at parameter

When PID auto tuning ends, M100 turns on

7.1.6 External Interrupt Function

In MK80S Series can perform max 8 points of external contact interrupt by using input of base unit without special interrupt module.

1) Usage
This function is useful to execute a high speed execution regardless of scan time.

2) Operating explanation

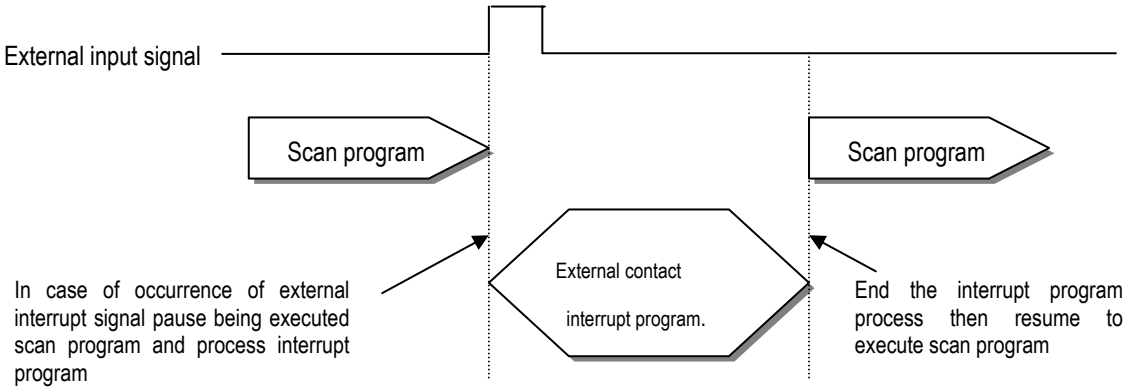

3) Function

(1) Max. 8 points can be used to external interrupt input within P000 ~ P007

(2) Inputting 8points of base unit are set functions like following.

	00	01	02	03	04	05	06	07
High speed counter	A-phase Input	B-phase Input	Preset Input	-	-	-	-	-
External interrupt	●	●	●	●	●	●	●	●
Time driven task	-	-	-	-	-	-	-	-
8points are available								

(3) Max, 8points of external contact interrupt are available to use. But the no. of them is decreased by using other interrupt (time driven interrupt)

(4) Designate contact point, no. of priority and movement condition of the task program which is moved by interrupt inputting.

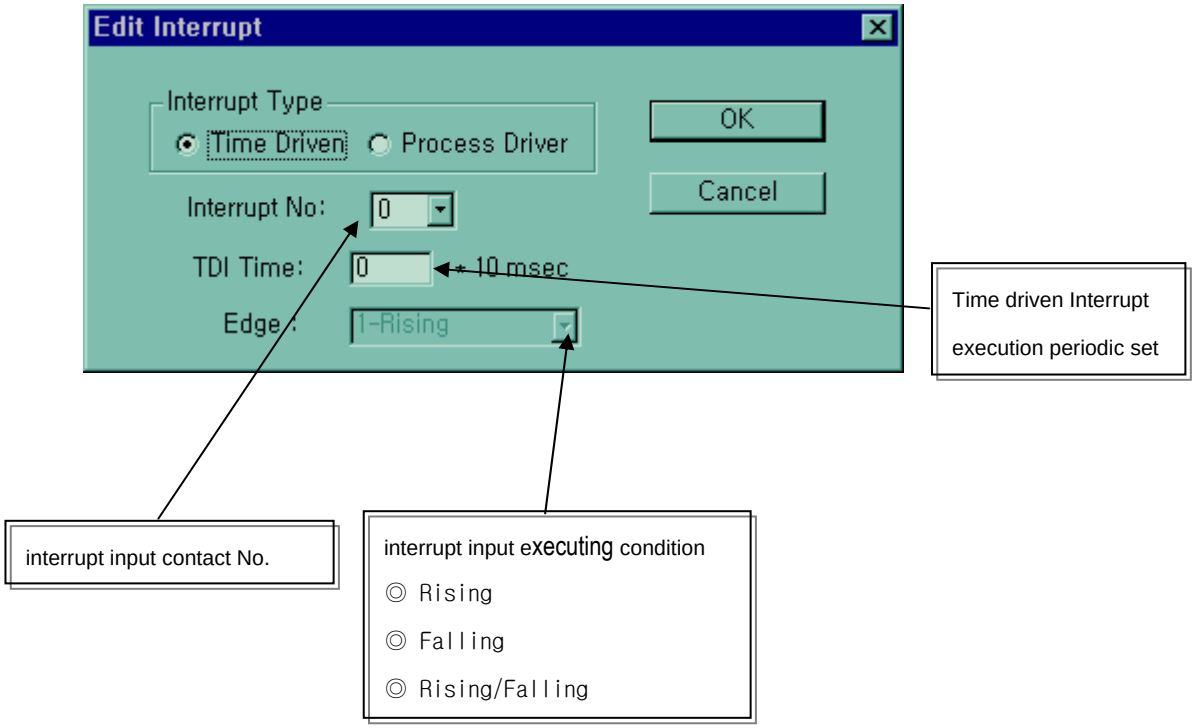

(5) For the details , refer to KGLWIN manual.

7. 2 Special module

7.2.1 A/D · D/A Combination module

1) Performance specification

The performance specification of the analog mixture module are following.

Item		Specifications			
Analog Input	Input range	Voltage	DC 0～10V (input resistance more than 1 MΩ)		
		Current	DC 0～20 mA (input resistance 250 Ω)		Classified by parameter
			DC 4～20 mA (input resistance 250 Ω)		
	Digital output	12Bit(-48~4047)			
	Voltage/Current selection	1.Setting by jumper pin for V/I selection on upper part of product (Up: voltage, Down: Current) 2. Voltage/current selected by KGL-WIN parameter 3. When current input is used, short the V and I terminal			
	No. of channel	2Channels			
	Absolute max. input	Voltage	DC +12V		
		Current	DC +24 mA		
Analog output	Output range	Voltage	DC 0～10V (External load resistance 2 kΩ～1 MΩ)		
		Current	DC 0～20 mA (External load resistance 510 Ω)		Classified by parameter
			DC 4～20 mA (External load resistance 510 Ω)		
	Digital Input	12Bit(-48~4047)			
	Voltage/Current selection	Separated from terminal			
	No. of channel	1Channel			
	Absolute max. output	Voltage	DC +12V		
		Current	DC +24 mA		
Common	Max. resolution	Voltage	DC0～10V	2.5 mV (1/4000)	
		Current	DC0～20 mA	5 μA (1/4000)	
			DC4～20 mA	6.25 μA (1/3200)	
	Accuracy	±0.5% [Full scale]			
	Max. conversion speed	2 ms/CH + scan time			
	Isolation	Photo coupler insulation between I/O terminals and PLC power supply (No isolation between channels)			
	Connect terminal	9 Points 2 terminals			
	Internal current Consumption	20 mA			
	External power supply	DC 21.6 ～ 26.4V, 80 mA			
	Weight	240g			

Remark

1) Offset/gain value can't be changed, it is fixed.
2) Analog inputting is set the current since this is manufactured.
3) Extend to use max.2 Modules

2) Names of parts and functions

Explain about names of parts and functions

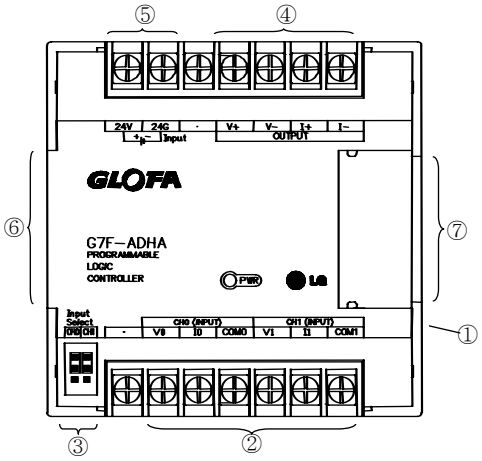

No	Contents.
①	RUN LED Indicate the operating status the G7F-ADHA
②	Analog input terminal Voltage Input CH0 (INPUT) V0 I0 COM0 Current input CH0 (INPUT) V0 I0 COM0 When current input is used, short the V and I terminal.
③	Jumper pin of analog input Input Select CH0 CH1 Right is CH.1selecting left is CH. 0 selecting Voltage Input Connect upper parts by jumper pins Current Input Connect lower parts by jumper pins.
④	Analog output terminal Voltage output V+ V- I+ I- OUTPUT Current output V+ V- I+ I- OUTPUT ▶ Only one type of output (Current or Voltage)is available on a module
⑤	External power input terminal ▶ External voltage 24VDC needs to this terminal.
⑥	Extension cable ▶ This cable is used to connect while analog mixture module is used..
⑦	Extension cable connector The connector connects extension cable when extended module is used.

3) Parameter setting

The same or less than KGLWIN V2.13	The same or more than KGLWIN V2.14
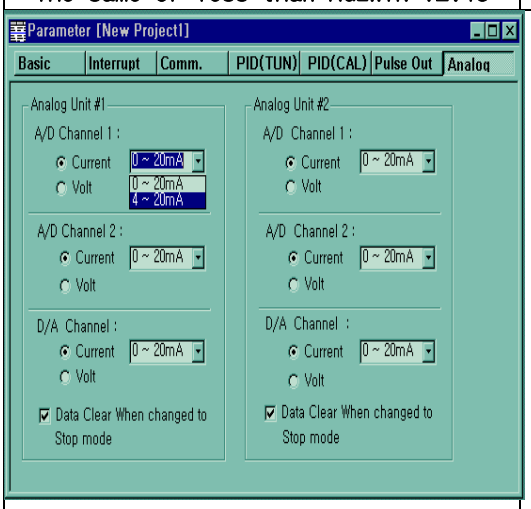	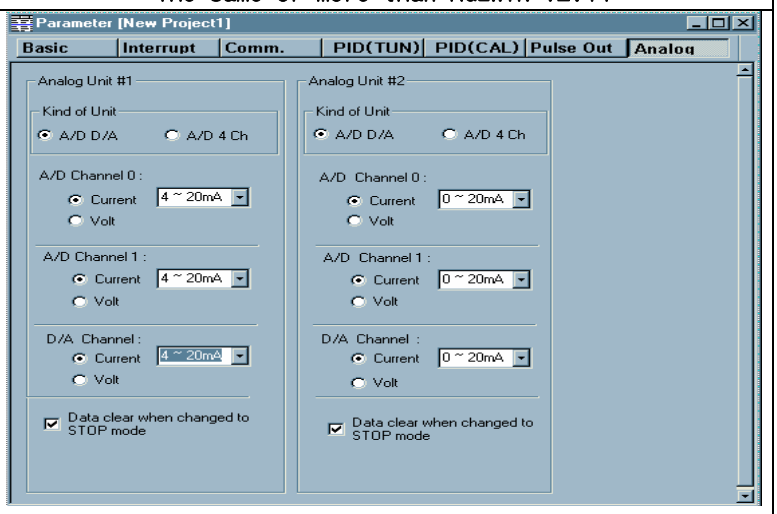

4) Reading A/D conversion value & Writing D/A conversion value

A/D conversion value and D/A conversion value stores special data register as following.

The table which is shown below is possible to use under the same or less than K80S CPU ROM V1.3.

Special data register	Explanation	Remark
D4980	A/D conversion value of channel 0 stores	A/D. D/A combination module #1
D4981	A/D conversion value of channel 1 stores	
D4982	D/A conversion value set	
D4983	A/D conversion value of channel 0 stores	A/D. D/A combination module #2
D4984	A/D conversion value of channel 1 stores	
D4985	D/A conversion value set	

The table which is shown below is possible to use under the same or more than K80S CPU ROM V1.4.

Special data register	Explanation	Remark
D4980	A/D conversion value of channel 0 stores	A/D. D/A combination module #1
D4981	A/D conversion value of channel 1 stores	
D4982	D/A conversion value stores	
D4983	unused	
D4984	A/D conversion value of channel 0 stores	A/D. D/A combination module #2
D4985	A/D conversion value of channel 1 stores	
D4986	D/A conversion value stores	
D4987	unused	

5) Scaling function

This function convert automatically range when the inout/output range is not matched

In case that input/output is current , this function is useful that external equapment' range is not matched each other.

(MK80S series converts range automatically as following : 0 ~ 20mA √ 4 ~ 20mA)

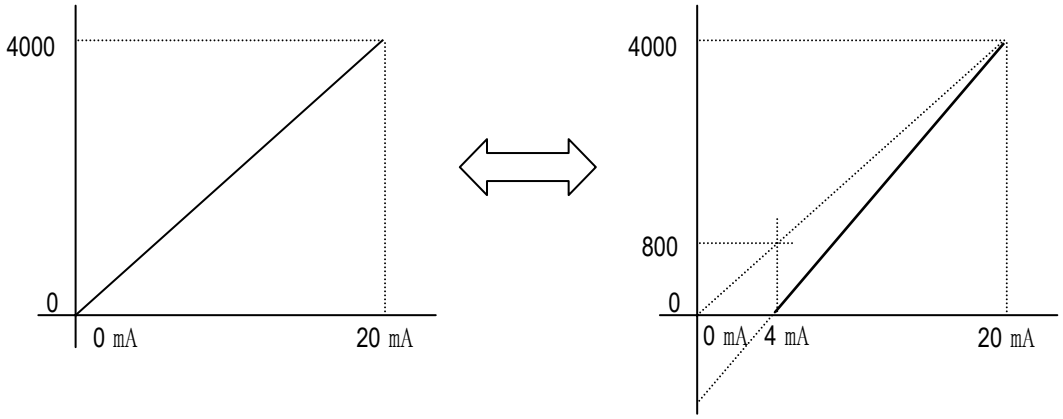

► Conversion method is as below

1) scaling conversion value (A/D conversion) = [(data of 0 ~ 20 ㎃) – 800] x 4000/3200

example) in case of 8 ㎃ input at range 0 ~ 20 ㎃

before the scaling conversion : 8 ㎃ / 5 ㎂ = 1600

after the scaling conversion : (1600 –800) x 1.25 = 1000

2) scaling conversion value (D/A conversion) = [(data of 4 ~ 20 ㎃) x 3200/4000] + 800

example) in case of '1000' output at range 4 ~ 20 ㎃

current output value before the scaling conversion : 1000 x 5 ㎂ = 5 ㎃

current output value after the scaling conversion : (1000 x 0.8) + 800 = 1600

1600 x 5 ㎂ = 8 ㎃

6) Wiring

(1) Caution for wiring

- ▶ Make sure that external input signal of the mixture module of AC and analog I/O is not affected by induction noise or occurs from the AC through using another cable.
- ▶ Wire is adopted with consideration about peripheral temperature and electric current allowance. Thicker than Max. size of wire AWG22 (0.3 ㎟) is better.
- ▶ If wire is put near to high temp. radiated device or contacted with oil for a long time, it may cause of electric leakage so that it gets broken or miss-operation during wiring.
- ▶ Be sure to connect with care of polarity while connecting to external 24V DC power supply.
- ▶ In case of wiring with high voltage line or generation line, it makes induction failure so then it may cause of miss-operation and out of order.

(2) Wiring example

a) Analog input

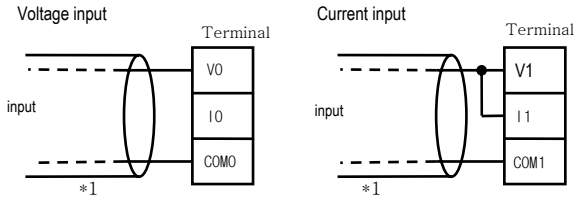

b) Analog output

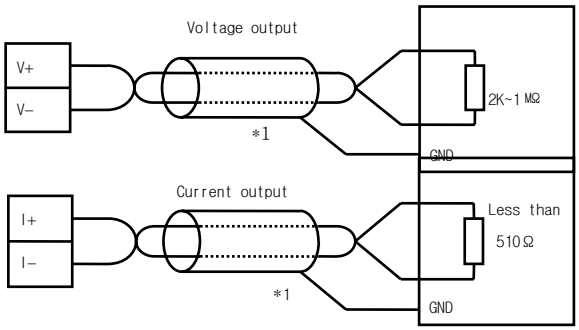

*1 : Be sure to use two-core twisted shield wire.
* Be careful to use that analog output is 1 channel.

7) I/O converstion characteristics

(1) Analog input characteristics

a) Voltage input

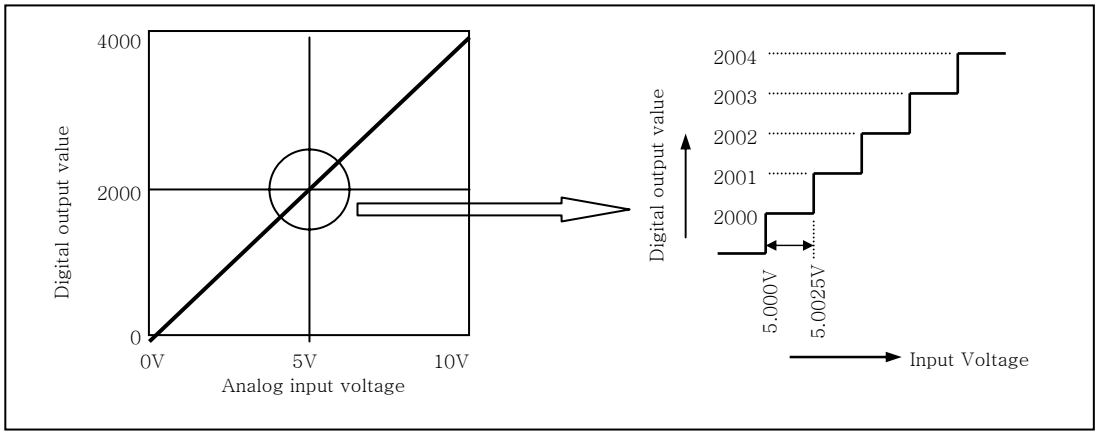

A/D conversion characteristics (voltage input)

In voltage input, digital amount 0 is output by 0V input and 4,000 is output by 10V input. Therefore input 2.5mV equals to digital amount 1, but value less than 2.5mV can't be converted.

b) Current input

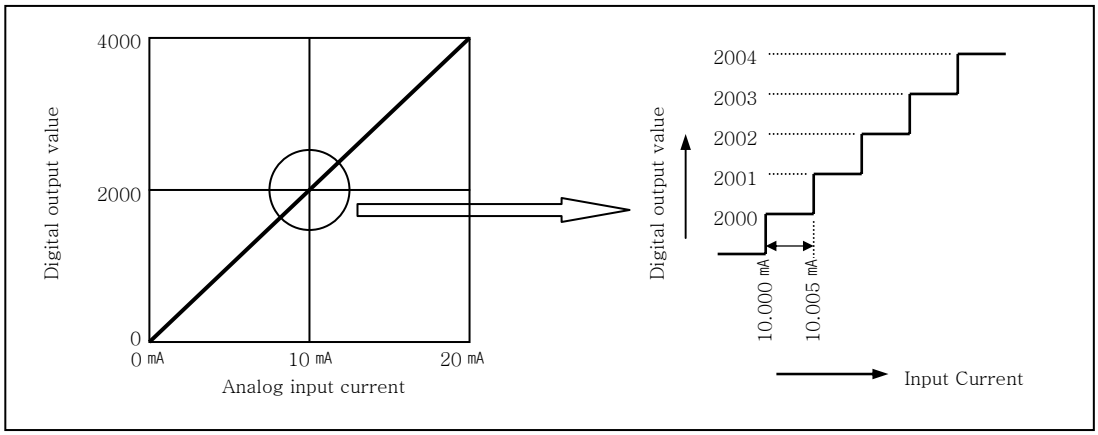

A/D conversion characteristics (Current input)

Current input 0mA becomes output 0, 10mA does 2000 and 20mA does 4000. therefore input 5 ㎂ equals to digital amount 1, but value less tan 5 ㎂ can't be converted. So abandon it.

(2) Analog output characteristics

a) Voltage output

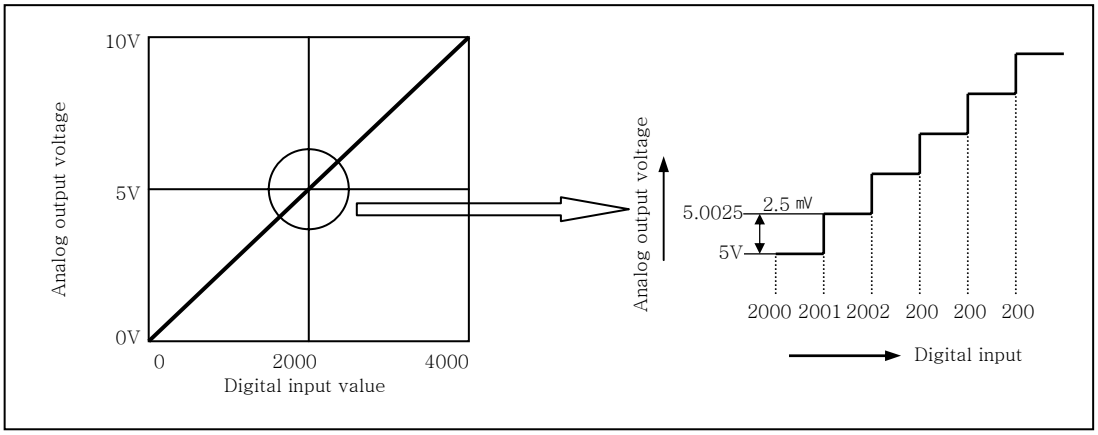

D/A conversion characteristic (voltage output)

Input of digital amount 0 outputs analog amount 0V, 4000 does 10V. Digital input 1 equals to 2.5mV of analog amount.

b) Current output

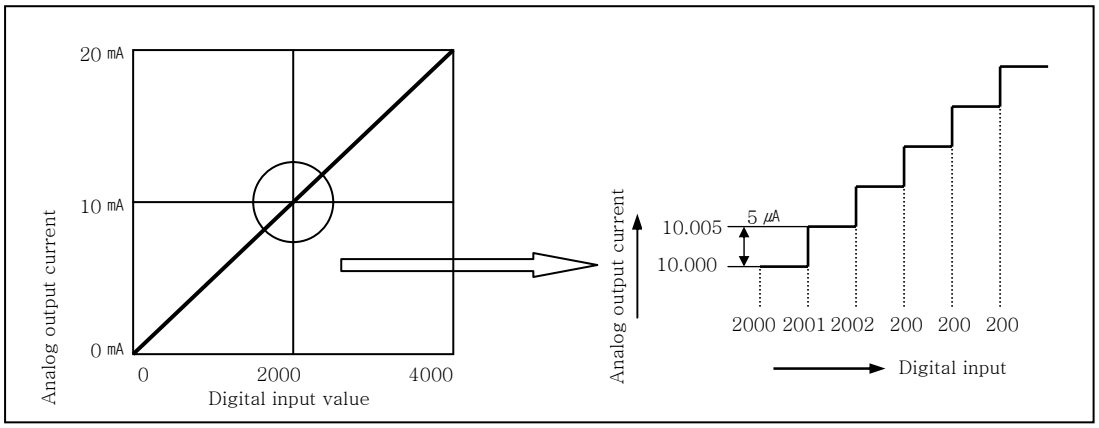

D/A conversion characteristic (Current output)

In current output, digital amount 0 exchanges to 0mA, and 4,000 does 20mA. Analog amount of digital input 1 equals to 5 μA.

8) Program example

(1) Distinction program of A/D conversion value

a) Program explanation

- When digital value of channel 0 is less than 2000, P090 is on.
- when digital value of channel 0 is more than 3000, P091 is on.
- When digital value of channel 0 is more or same than 2000 or lesser than 3000, P092 is on.

b) System configuration

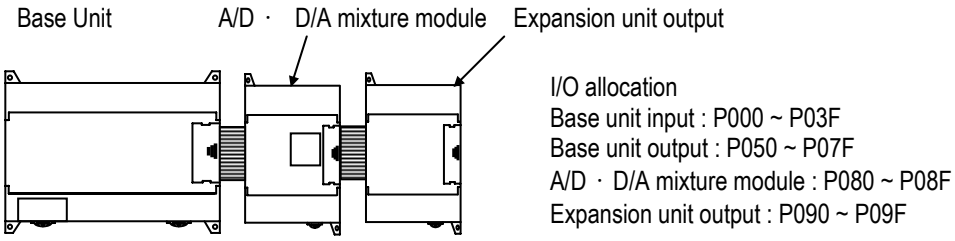

c) Program

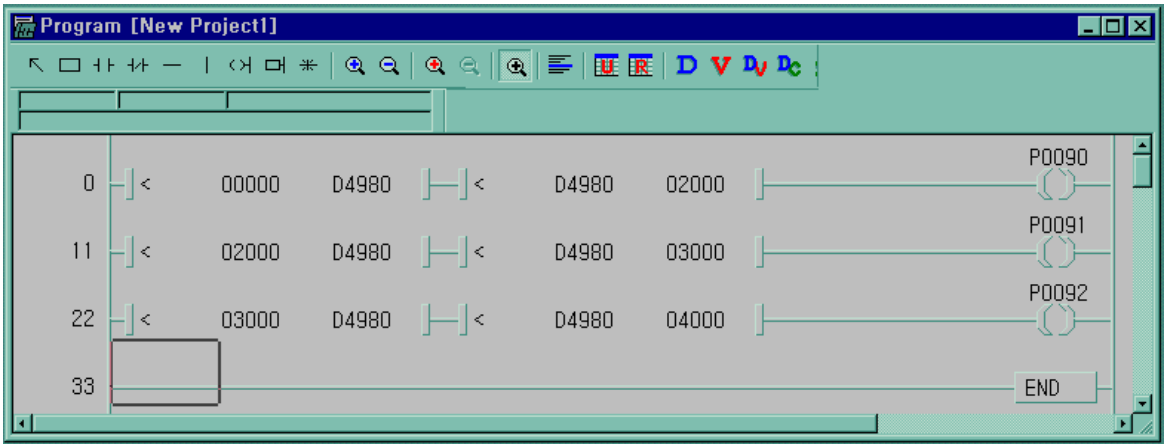

(2) Program which controls speed of inverter by analog output voltage of 5 steps

a) Program explanation

-.When P80 becomes On, 2000 (5V) is output.

-. When P81 becomes On, 2400 (6V) is output.

-.When P82 becomes On, 2800 (7V) is output.

-.When P83 becomes On, 3200 (8V) is output.

-.When P84 becomes On, 3600 (9V) is output.

b) System configuration

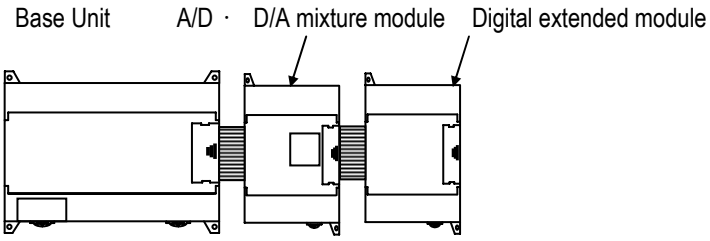

c) Program

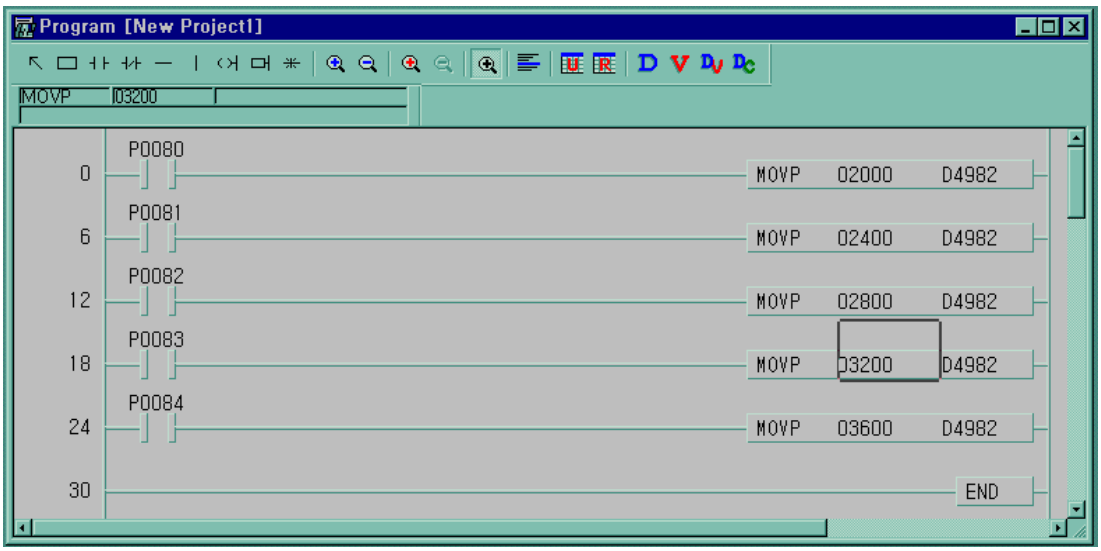

7.2.2 A/D Conversion module

1) Performance specifications

The performance specifications of the analog input module are following.

Item		Specifications
Analog input	Voltage	0～10VDC (input resistance more than 1 MΩ)
	Current	DC 4～20 mA (input resistance 250Ω) DC 0～20 mA (input resistance 250Ω) (Classified by parameter)
	Voltage/Current Selection	-.Setting by input terminal (When current input is used, short the V and I terminal) - Voltage/Current is selected by KGL-WIN parameter
Digital output		12bit binary (0～4000)
Maximum resolution	0～10VDC	2.5 mV (1/4000)
	DC 0～20 mA	5 μA (1/4000)
	DC 4～20 mA	6.25 μA (1/3200)
Overall accuracy		±0.5% [Full Scale]
Max. conversion speed		2 ms/CH + scan time
Max. absolute input		Voltage : ±15V, Current : ±25 mA
Number of analog input point		4channels/module
Isolation		Between input terminal and PLC power supply : Photo coupler isolation (No isolation between channels)
Terminal connected		2 points/16 points terminal block
Current Consumption	+5V	100mA
External Power supply	Voltage	DC 21.6 ~ 26.4V
	Current consumption	100 mA
Weight		200g

Remark

- ▶ Offset/Gain value can't be changed, because it is fixed
- ▶ Analog inputting is set the current since this is manufactured.
- ▶ It is possible to use to extend max.2 Modules
- ▶ The A/D conversion module is possible only to use in more than K80S ROM V1.4, KGL-WIN V2.14

2) Names of parts and functions

The Names of parts and functions of the analog input module are following.

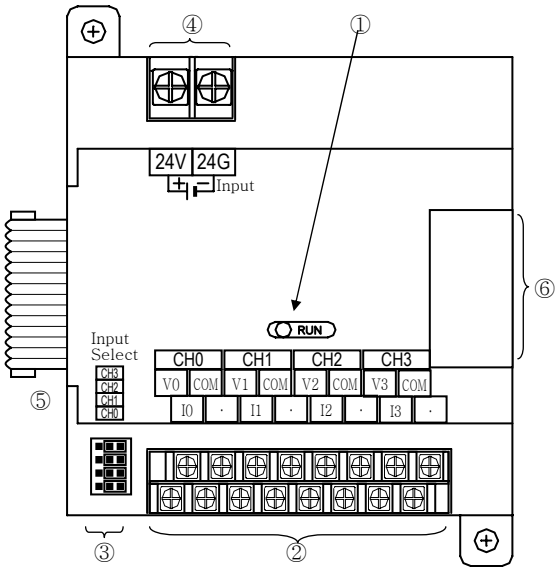

No	Contents
①	RUN LED Indicate the operating status the G7F-AD2A
②	Analog input terminal Voltage input / Current input ▶ When current input is used, short the V and I terminal.
③	Jumper pin of analog input 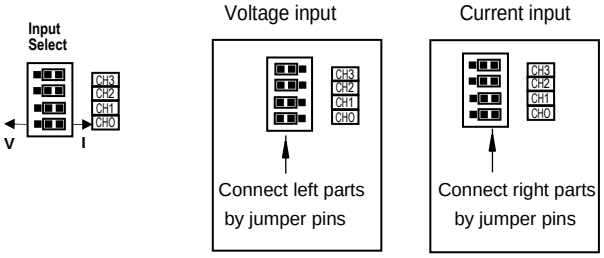 Voltage input: Connect left parts by jumper pins Current input: Connect right parts by jumper pins
④	External power input terminal ▶External voltage 24VDC needs to this terminal.
⑤	Extension cable ▶This cable is used to connect while analog input module is used..
⑥	Extension cable connector ▶The connector connects extension cable when extended module is used.

3) Parameter setting

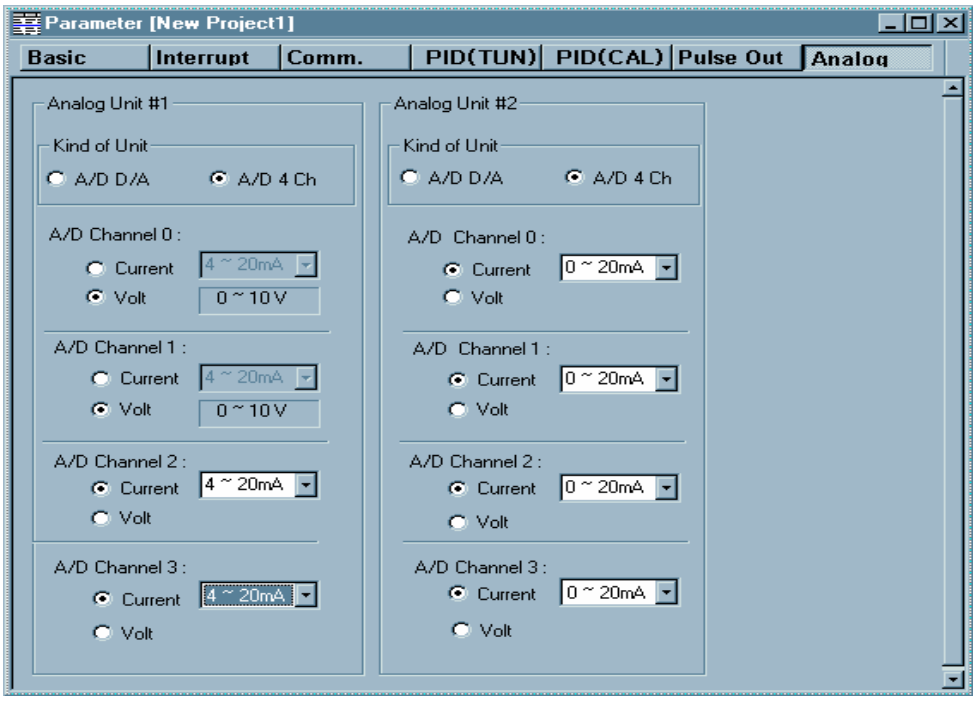

4) Reading A/D conversion value

A/D conversion value stores special data register as following.

* It is possible to use A/D conversion module more than K80S ROM V1.4

Special data register	Explanation	Remark
D4980	A/D conversion value of channel 0 stores	Expansion A/D conversion module #1
D4981	A/D conversion value of channel 1 stores	
D4982	A/D conversion value of channel 2 stores	
D4983	A/D conversion value of channel 3 stores	
D4984	A/D conversion value of channel 0 stores	Expansion A/D conversion module #2
D4985	A/D conversion value of channel 1 stores	
D4986	A/D conversion value of channel 2 stores	
D4987	A/D conversion value of channel 3 stores	

5) Scaling function

The scaling function is the same that of A/D, D/A combination module.

6) Wiring

(1) Caution for wiring

▶ Make sure that external input signal of the mixture module of AC and analog I/O is not affected by induction noise or occurs from the AC through using another cable.

▶ Wire is adopted with consideration about peripheral temperature and electric current allowance. Thicker than Max. size of wire AWG22 (0.3 ㎟) is better.

▶ If wire is put near to high temp. radiated device or contacted with oil for a long time, it may cause of electric leakage so that it gets broken or miss-operation during wiring.

▶ Be sure to connect with care of polarity while connecting to external 24V DC power supply.

▶ In case of wiring with high voltage line or generation line, it makes induction failure so then it may cause of miss-operation and out of order.

(2) Wiring

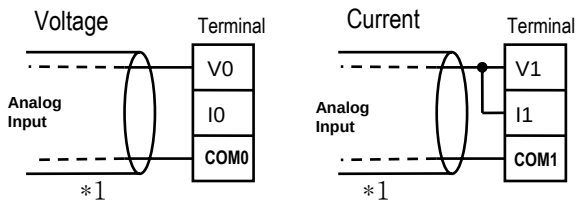

*1 : Be sure to use two-core twisted shield wire.

7) Analog/Digital conversion characteristics

(1) Analog input characteristics

a) Voltage input

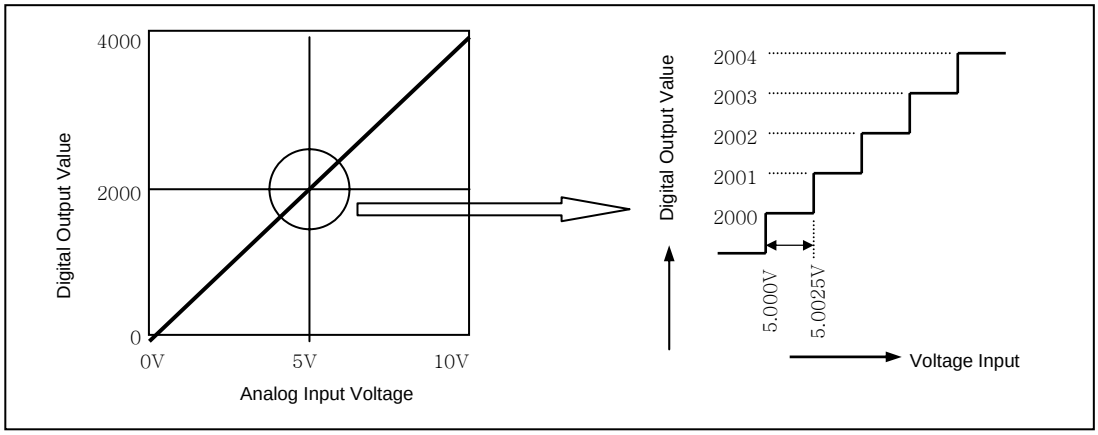

A/D Conversion Characteristics (Voltage Input)

In voltage input, digital amount 0 is output by 0V input and 4,000 is output by 10V input. Therefore input 2.5mV equals to digital amount 1, but value less than 2.5mV can't be converted.

b) Current input

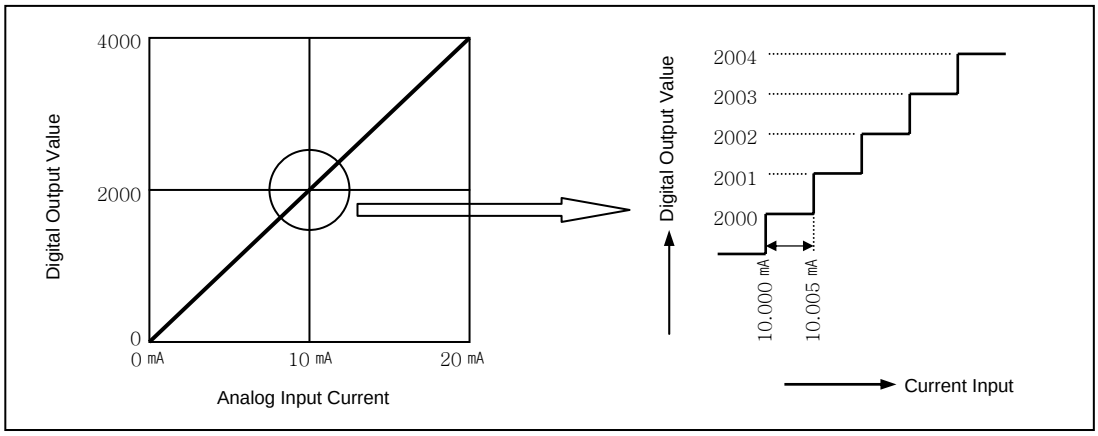

A/D Conversion Characteristics (Current Input 0～20 mA)

Current input 0mA becomes output 0, 10mA does 2000 and 20mA does 4000. therefore input 5 μA equals to digital amount 1, but value less tan 5 μA can't be converted. So abandon it.

8) Program example

(1) Distinction program of A/D conversion value(Analog input range: DC4～20 ㎃, 0~10VDC)

a) Program explanation

- When digital value of channel 0 is the same or more than 2000 and the same or less than 3000, P090 is on.
- When digital value of channel 1 is the same or more than 2000 and the same or less than 3000, P091 is on.
- When digital value of channel 2 is the same or more than 2000 and the same or less than 3000, P092 is on.
- When digital value of channel 3 is the same or more than 2000 and the same or less than 3000, P093 is on.

b) System configuration

(a) Analog input

channel "0", "1" : Voltage input(0 ～ 10VDC)

channel "2", "3" : Current input(DC 4 ～ 20 ㎃)

(b) Parameter setting

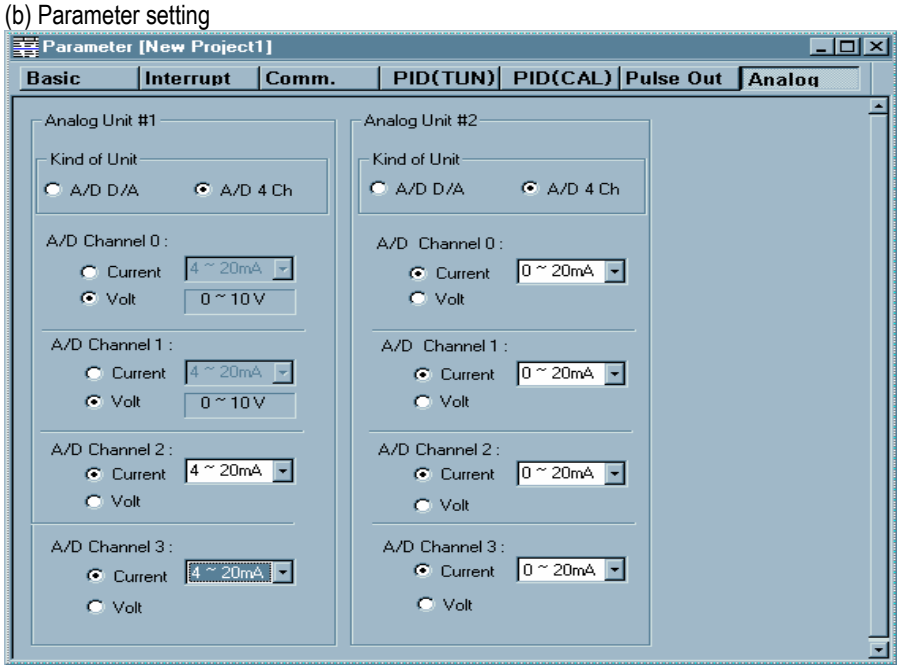

(c) System configuration

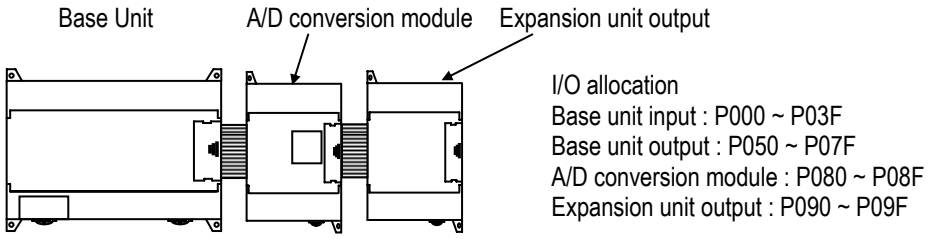

c) Program

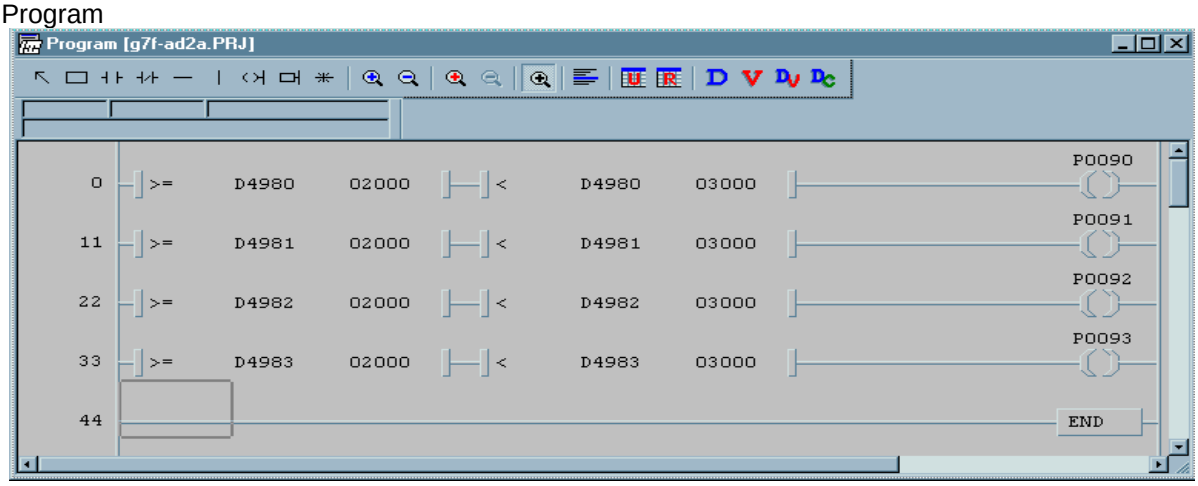

7.2.3 Analog timer

1) Performance specification

The performance specification of the analog timer module are following.

Item	Specification
Number of channels	4
Output value range	8 Bit (Digital output range: 0 ～ 200)
Setting type	Setting by variable resistance
Accuracy of timer	±2.0% (Accuracy about max. value)
Operation method	Storing data register automatically
Internal current consumption	50 ㎃
Number of module installment	Max 3 modules
Weight	200g

2) Names of parts and functions

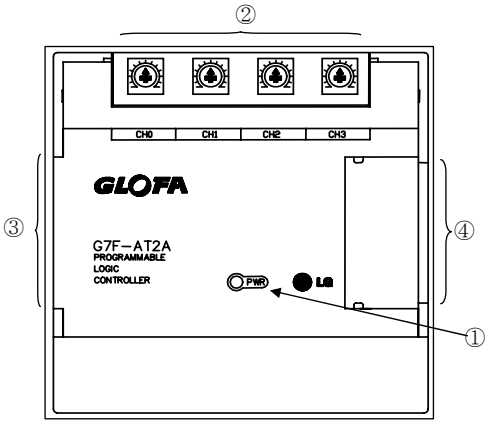

No.	Name	Contents
①	RUN LED	Indicate the operating status the G7F-AT2A. On: normal operating Off: DC 5V power off or the G7F-AT2A module fault
②	Channel	Setting up the length of timer through variable resistance to every channel.
③	Extension cable	
④	Extension cable connection terminal	

3) Reading A/T conversion value

A/T conversion value stores special data register as following.

Special data register	Explanation	remark
D4966	A/T conversion value of channel 1 stores	Expansion A/T module #1
D4967	A/T conversion value of channel 2 stores	Expansion A/T module #1
D4968	A/T conversion value of channel 3 stores	Expansion A/T module #1
D4969	A/T conversion value of channel 4 stores	Expansion A/T module #1
D4970	A/T conversion value of channel 1 stores	Expansion A/T module #2
D4971	A/T conversion value of channel 2 stores	Expansion A/T module #2
D4972	A/T conversion value of channel 3 stores	Expansion A/T module #2
D4973	A/T conversion value of channel 4 stores	Expansion A/T module #2
D4974	A/T conversion value of channel 1 stores	Expansion A/T module #3
D4975	A/T conversion value of channel 2 stores	Expansion A/T module #3
D4976	A/T conversion value of channel 3 stores	Expansion A/T module #3
D4977	A/T conversion value of channel 4 stores	Expansion A/T module #3

4) Program example

(1) Program explanation

Program which controls on-delay time of output contact point within 0 to 20 sec. By analog timer module.

(2) System configuration

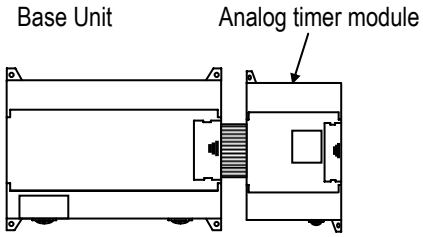

(3) Program

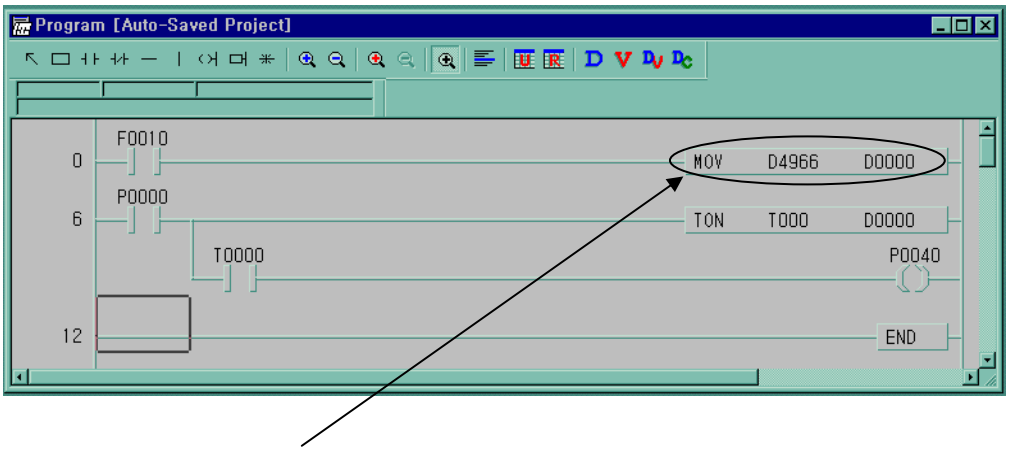

A/T conversion data is moved D000 always

Chapter 8 Communication Function

8.1 Dedicated Protocol Communication

8.1.1 Introduction

MK80S's built-in Cnet communication uses only MK80S base unit for a dedicated communication. That is, it doesn't need a separate Cnet I/F module to facilitate the user-intended communication system by utilizing reading or writing of any area in CPU, and monitoring function.

MK80S base unit serves as follows:

- Individual/continuous reading of device
- Individual/continuous writing of device
- Reading CPU status
- Monitor devices registration
- Executing monitoring
- 1:1 connection(link between MASTER-K's) system configuration (MK80S base unit: RS-232C)

Remark

MK80S built-in communication function supports Cnet communication without any separate Cnet module. It must be used under the following instructions.

1) MK80S base unit supports 1:1 communication only. for 1:N system having master-slave Format, use MK80S base unit with G7L-CUEC module connected. G7L-CUEC module supports RS-422/485 protocol. (10-point main unit includes RS-485 communication terminal, so 1:N system can be configured without G7L-CUEC module)
2) RS-232C communication cable for MK80S base unit is different from RS-232C cable for KGL_WIN in pin arrangement and from the cable for Cnet module, too. The cable can't be used without any treatment. For the detailed wiring method, refer to 8.1.2.
3) It's possible to set baud rate type and M area size in KGL_WIN. For the detailed information, refer to the appendix or KGLWIN manual.

8.1.2 System configuration method

According to the method of connection, the system using MK80S built-in communication can be composed.

1) Connecting system configuration (link between MASTER-K's)

(1) 1:1 connection with general PC

a) Communication program made by C or BASE computer language on the user's computer, or utility program like MMI software can be used.

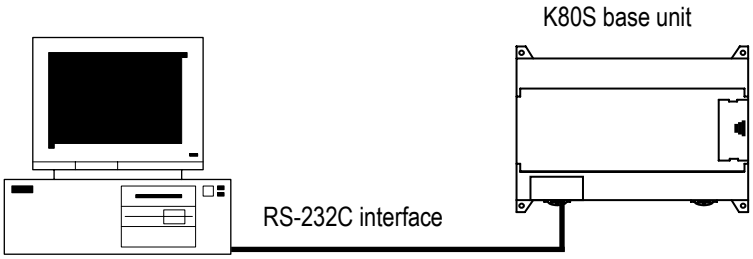

b) Wiring method

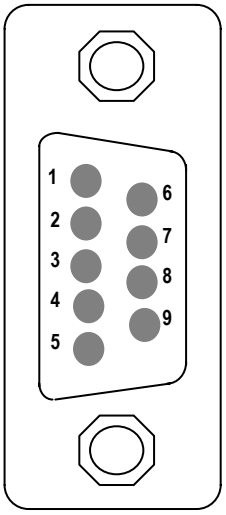

Female Type

PC Pin No.	Pin assignment And direction	MK80S base unit Pin No.	Signal
1		1	5V
2		2	RXD1
3		3	TXD1
4		4	RXD2
5		5	SG
6		6	5V
7		7	TXD2
8		8	SG
9		9	SG

TXD1,RXD1 are for loader communication and TXD2,RXD2 are for Cnet

(2) 1:1 connection with a monitoring device like PMU

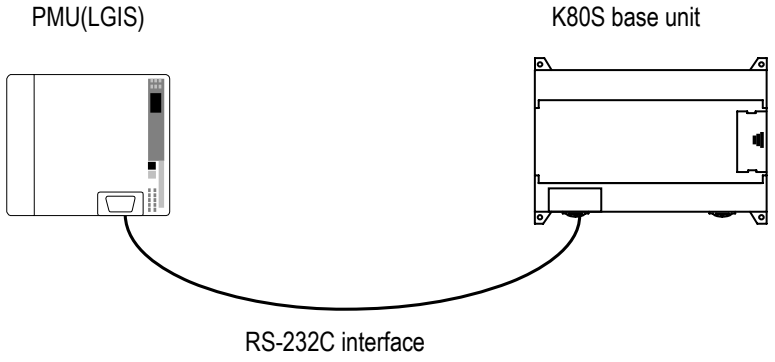

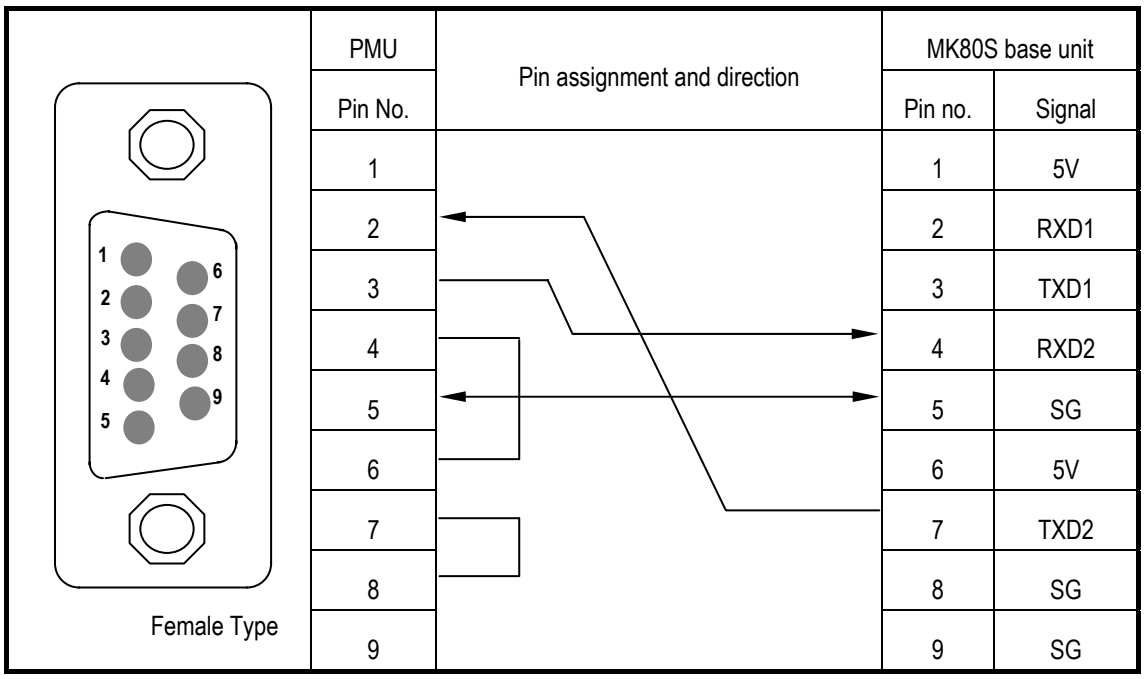

PMU	Pin assignment and direction	MK80S base unit	
Pin No.		Pin no.	Signal
1		1	5V
2		2	RXD1
3		3	TXD1
4		4	RXD2
5		5	SG
6		6	5V
7		7	TXD2
8		8	SG
9		9	SG

.

(3) 1:1 connection with other MK80S

For the detailed information, refer to 8.1.7 “1:1 Dedicated Protocol Communication.”

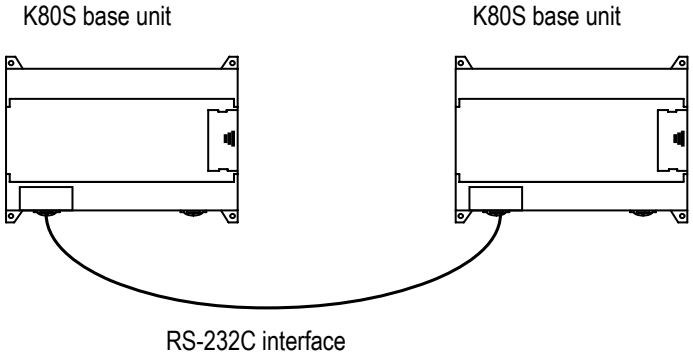

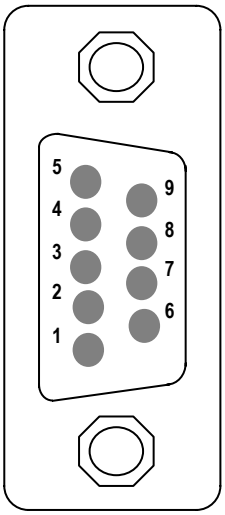

Male Type

MK80S base unit	Pin assignment and direction	MK80S base unit	
Pin no.		Pin no.	Signal
1		1	5V
2		2	RXD1
3		3	TXD1
4		4	RXD2
5		5	SG
6		6	5V
7		7	TXD2
8		8	SG
9		9	SG

8.1.3 Frame Structure

1) Base Format

(1) Request frame(external communication device → MK80S base unit)

(Max. 256 Bytes)

Header (ENQ)	Station number	Command	Command type	Structurized data area	Tail (EOT)	Frame check (BCC)

(2) ACK Response frame (MK80S base unit → external communication device, when receiving data normally)

(max. 256 Bytes)

Header (ACK)	Station number	Command	Command type	Structurized data area or null code	Tail (ETX)	Frame check (BCC)

(3) NAK Response frame (MK80S base unit → external communication device, when receiving data abnormally)

(max. 256 Bytes)

Header (NAK)	Station	Command	Command type	Error code (ASCII 4 Byte)	Tail (ETX)	Frame check (BCC)

Remark

1) Used control codes are as follows. Be familiar with the following control codes. Because they are importantly used for communication.

[Control codes]

Codes	Hex value	Name	Contents
ENQ	H05	Enquire	Request frame initial code
ACK	H06	Acknowledge	ACK response frame initial code
NAK	H15	Not Acknowledge	NAK response frame initial code
EOT	H04	End of Text	Request frame ending ASCII code
ETX	H03	End Text	Response frame ending ASCII code

Remark

1) The numerical data of all frames are ASCII codes equal to hexadecimal value, if there's no clear statement. The terms in hexadecimal are as follows.

- Station No.
- When the main command is R(r) or W (w) and the command type is numerical (means a data type)
- All of the terms indicating size of all data in the Formatted data area.
- Monitoring registration and command registration number of execution commands.
- All contents of data

Remark

1) If it is hexadecimal, H is attached in front of the number of frames like H01, H12345, H34, H12, and H89AB.

2) Sequence of command frame

(1) Sequence of command request frame

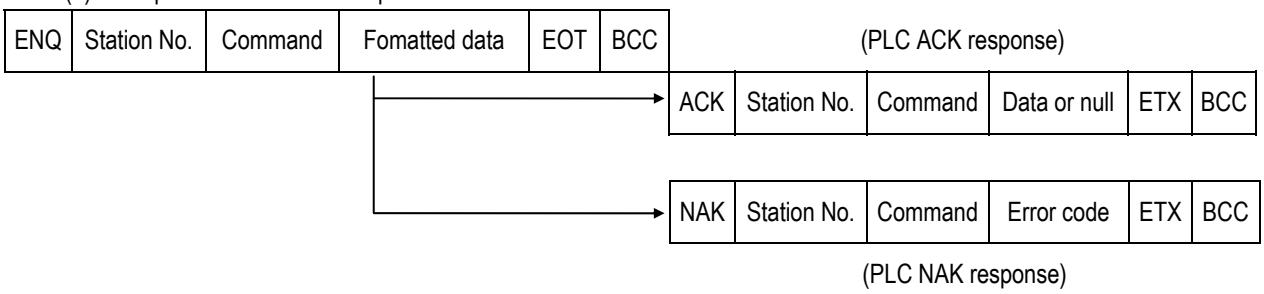

8.1.4 List of commands

Command list for communication.

Division / Item		Command				Treatment
		Main command		Command type		
		Code	ASCII code	Code	ASCII code	
Reading device	Individual reading	r(R)	H72 (H52)	SS	5353	Reads device of Bit, Word and type.
	Continuos reading	r(R)	H72 (H52)	SB	5342	Reads device Word in block unit. (Continuous reading Bit is unavailable)
Writing device	Individual reading	w (W)	H77 (H57)	SS	5353	Writes data to device of Bit and Word type.
	Continuos reading	w(W)	H77 (H57)	SB	5342	Writes data to Word type in block unit. (Continuous reading Bit is unavailable)
CPU Status reading		r(R)	H73 (H53)	ST	5354	Reads flag list like PLC operation status and error information. (For detailed flag contents, refer to MK80S manual).

Division / Item	Command				Treatment
	Main command		Register No.		
	Code	ASCII code	Register no.	ASCII code	
Monitoring variable register	x(X)	H78 H58	H00~H09	3030 ~ 3039	Register device to monitor.
Execution of monitoring	y(Y)	H79 (H59)	H00~H09	3030 ~ 3039	Execute registered device to monitor.

Remark

1) MK80S base unit identifies capitals or small letters for main commands, but not for the others.
2) If it's a main command in capitals, it calculates BCC value. But if it's not, it doesn't. Therefore, when BCC for frame check is used, main commands must be in small letters.

8.1.5 Data type

It's possible to read and write device in built-in communication. When device is used, be aware of data type.

1) Data type of variable

- Available types of device : P,M,L,K,C,T,D,S,F
- When variable is used, attach '%'(25H) in front of the marking characters.

Data type	Marking characters	Examples
Bit	X(58H)	%PX000, %MX000, %LX000, %KX000, %CX000, %TX000, %FX000
Word	W(57H)	%PW000, %MW000, %LW000, %KW000, %CW000, %TW000, %FW000, %DW000, %SW000

Device Name	Explanation	Read/Write	Bit/Word Assignment
P	Input/Output relay	Available	Both
M	Auxiliary relay	Available	Both
L	Link relay	Available	Both
K	Keep relay	Available	Both
C	Counter	Available	Both
T	Timer	Available	Both
D	Data Register	Available	Word Only
S	Step relay	Available	Word Only
F	Special relay	Read Only	Both

Remark

1) Timer/Counter used in word command means current values.

2) Data register and Step relay can uses only word commands.

3) When Link module is used, Link relay must not written.(it cause communication error)

8.1.6 Execution of commands

1) Individual reading of device(RSS)

(1) Introduction

This is a function that reads PLC device specified in accord with memory data type. Separate device memory can be read up to 16 at a time.

(2) PC request format

Format name	Header	Station No.	Command	Command type	Number of blocks	Device length	Device name	.....	Tail	Frame check
Ex. of frame	ENQ	H20	R(r)	SS	H01	H06	%MW100		EOT	BCC
ASCII value	H05	H3230	H52(72)	H5353	H3031	H3036	H254D57313030		H04	

1 block(setting can be repeated up to max. 16 blocks)

Item	Explanation
BCC	When command is lowercase(r), only one lower byte of the value resulted by adding 1 Byte each to ASCII values from ENQ to EOT is converted into ASCII and added to BCC. For example, the BCC of the above frame is gotten as below: H05+H32+H30+H72+H53+H53+H30+H31+H30+H36+H25+H4D+H57+H31+H30+H30+H04 =H03A4 Therefore BCC value is A4.
Number of Blocks	This specifies how much of the blocks composed of "[device length][device name]" are in this request format. This can be set up to 16. Therefore, the value of [Number of blocks] must be set between H01(ASCII value:3031)-H10(ASCII value:3030).
Device length(Name length of device)	This indicates the number of name's characters that means device, which is allowable up to 16 characters. This value is one of ASCII converted from hex type, and the range is from H01(ASCII value:3031) to H10(ASCII value:3130). For example, if the device name is %MW0, it has 4 characters to be H04 as its length. If %MW000 characters to be H06.
Device name	Address to be actually read is entered. This must be ASCII value within 16 characters, and in this name, digits, upper/lower case, '%' only is allowable to be entered.

Remark

1) Numerical data of frame(Ex.) is hex value, and "H" is unnecessary during preparing real frame.
2) Device data type of each must be same. If data type of the first block is WORD, and the second block is BIT, error occurs.

(3) Response format (ACK response)

Format name	Header	Station No.	Command	Command type	Number of blocks	Number of data	data	.....	Tail	Frame check
Ex. of frame	ACK	H20	R(r)	SS	H01	H02	HA9F3		ETX	BCC
ASCII value	H06	H3230	H52(72)	H5353	H3031	H3032	H41394633		H04	

1 block(max. 16 blocks possible)

Item	Explanation
BCC	When command is lowercase(r), only one lower byte of the value resulted by adding 1 Byte each to ASCII values from ACK to ETX is converted into ASCII and added to BCC, and sent.
Number of data	Number of data means byte number of hex type, and is converted into ASCII. This number is determined according to data type(X,W) included in device name of computer request Format. Number of data in accordance with its data type is as follows: Data type / Available variable / Number of data Bitl(X) / %(P,M,L,K,T,C,F)X / 1 Word(W) / %(P,M,L,K,T,C,D,S,F)W / 2
Data	• In data area, there are the values of hex data converted to ASCII code saved.

Ex.1

The fact that number of data is H04(ASCII code value:H3034) means that there is hex data of 4 bytes in data .
Hex data of 4 bytes is converted into ASCII code in data.

Ex.2

If number of data is H04 and the data is H12345678, ASCII code converted value of this is "31 32 33 34 35 36 37 38," and this contents is entered in data area. Name directly, highest value is entered first, lowest value last.

Remark

1) If data type is Bit, data read is indicated by bytes of hex. Namely, if Bit value is 0, it indicated by H00, and if 1, by H01.

(4) Response format (NAK response)

Format name	Header	Station No.	Command	Command type	Error code (Hex 2 Byte)	Tail	Frame check
Ex. of frame	NAK	H20	R(r)	SS	H1132	ETX	BCC
ASCII value	H15	H3230	H52(72)	H5353	H31313332	H03	

Item	Explanation
BCC	When command is lowercase(r), only one lower byte of the value resulted by adding 1 Byte each to ASCII values from NAK to ETX is converted into ASCII and added to BCC.
Error code	Hex and 2 bytes(ASCII code, 4 bytes) indicate error type. For the details, see 8.1.8 Error codes.

(5) Example

This example supposes when 1 WORD from M20 and 1 WORD from P001 address of station No.1 are read and BCC value is checked. Also it is supposed that H1234 is entered in M20, and data of H5678 is entered in P001.

← Computer request format (PC → MK80S Base Unit)

Format name	Header	Station No.	Command	Command type	Number of blocks	Variable length	Format name	Devicelength	Format name	Tail	Frame check
Ex. of frame	ENQ	H01	r	SS	H02	H05	%MW20	H06	%PW001	EOT	BCC
ASCII value	H05	H3031	H72	H5353	H3032	H3035	H254D573230	H3036	H255057303031	H04	

↑ For ACK response after execution of command(PC ← MK80S Base Unit)

Format name	Header	Station No.	Command	Command type	Number of blocks	Number of data	Data	Number of data	Data	Tail	Frame check
Ex. of frame	ACK	H01	r	SS	H02	H02	H1234	H02	H5678	ETX	BCC
ASCII value	H06	H3031	H72	H5353	H3032	H3032	H31323334	H3032	H35363738	H03	

→ For NAK response after execution of command(PC ← MK80S Base Unit)

Format name	Header	Station No.	Command	Command type	Error code	Tail	Frame check
Ex. of frame	NAK	H01	r	SS	Error code (2)	ETX	BCC
ASCII value	H15	H3031	H72	H5353	Error code (4)	H03	

Frame check BCC is automatically calculated internally.

2) Continuous reading(RSB) of device

(1) Introduction

This is a function that reads the PLC device memory directly specified in accord with memory data type. With this, data is read from specified address as much as specified continuously.

(2) PC request format

Format name	Header	Station No.	Command	Command type	Device length	Device	Number of data (Max. 128 Bytes)	Tail	Frame check
Ex. of frame	ENQ	H10	R(r)	SB	H06	%MW100	H05	EOT	BCC
ASCII value	H05	H3130	H52(72)	H5342	H3036	H254D57313030	H3035	H04	

Remark

1) Number of data specifies the number according to the type of data. Namely, if the data type of device is word, and number is 5, it means that 5 WORDs should be read.
2) Max. of %MW in number of data can be used up to 64.
3) Protocol of RSB doesn't have number of blocks.
4) R(r)SB command of bit devices is not available.

Item	Explanation
BCC	When command is lowercase(r), only one lower byte of the value resulted by adding 1 Byte each to ASCII values from ENQ to EOT is converted into ASCII and added to BCC.
Device length(Name length of device)	This indicates the number of name's characters that means device, which is allowable up to 16 characters. This value is one of ASCII converted from hex type, and the range is from H01(ASCII value:3031) to H10(ASCII value:3130).
Device name	Address to be actually read is entered. This must be ASCII value within 16 characters, and in this name, digits, upper/lowercase, and '%' only are allowable to be entered.

(3) MK80S Base Unit response format (MK80S of ACK response)

Format name	Header	Station No.	Command	Command type	Number of blocks	Number of data	data	Tail	Frame check
Ex. of frame	ACK	H10	R(r)	SB	H01	H02	H1122	EOT	BCC
ASCII value	H06	H3130	H52(72)	H5342	H3031	H3134	H31313232	H03	

Item	Explanation
BCC	When command is lowercase(r), only one lower byte of the value resulted by adding 1 Byte each to ASCII values from ACK to ETX is converted into ASCII and added to BCC, and sent.
Number of data	It means byte number of hex type, and is converted into ASCII. This number is determined by multiplying the data number of computer request Format by the data size(in below table) according to memory type(B,W,D) included in variable name of computer request Format.

Data type	Available device	Data size
WORD(W)	%(P,M,L,K,F,T,C,D,S)W	2

Item	Explanation
Data	.In data area, there are the values of hex data converted to ASCII code saved.

Ex.1

When memory type included in variable name of computer request Format is W(WORD), and data number of computer request Format is 03, data number of PLC ACK response after execution of command is indicated by H06(2*03 = 06 bytes)Byte and ASCII code value 3036 is entered in data area.

Ex.2

In just above example, when data contents of 3 WORDs are 1234, 5678, and 9ABC in order, actual ASCII code converted values are 31323334 35363738 39414243, and the contents are entered in data area.

(4) Response format (NAK response)

Format name	Header	Station No.	Command	Command type	Error code (Hex 2 Byte)	Tail	Frame check
Ex. of frame	NAK	H10	r	SB	H1132	ETX	BCC
ASCII value	H15	H3130	H72	H5342	H31313332	H03	

Item	Explanation
BCC	When command is lowercase(r), only one lower byte of the value resulted by adding 1 Byte each to ASCII values from NAK to ETX is converted into ASCII and added to BCC, and sent.
Error code	Hex and 2 bytes(ASCII code, 4 bytes) indicate error type. For the details, see 8.1.8 Error codes.

(5) Example

This example supposes that 2 WORDs from M000 of station No. 10 is read and BCC value is checked. Also it is supposed that data in M000 and in M001 is as follow:

M000 = H1234

M001 = H5678

Computer request format (PC → MK80S Base Unit)

Format name	Header	Station No.	Command	Command type	Device length	Device name	Number of data	Tail	Frame check
Frame (Example)	ENQ	H0A	r	SB	H06	%MW000	H02	EOT	BCC
ASCII value	H05	H3041	H72	H5342	H3036	H254D5730 3030	H3032	H04	

For ACK response after execution of command(PC ← MK80S Base Unit)

Format name	Header	Station No.	Command	Command type	Number of data	Data	Tail	Frame check
Frame (Example)	ACK	H0A	r	SB	H04	12345678	ETX	BCC
ASCII value	H06	H3041	H72	H5342	H3034	H3132333435363738	03	

For NAK response after execution of command(PC ← MK80S Base Unit)

Format name	Header	Station No>	Command	Command type	Error code	Tail	BCC
Frame (Example)	NAK	H0A	r	SB	Error code (2Byte)	ETX	BCC
ASCII value	H15	H3041	H72	H5342	Error code (4Byte)	H03	

3) Individual writing of device(W(w)SS)

(1) Introduction

This is a function that writes the PLC device memory directly specified in accord with memory data type.

(2) PC request format

Format name	Header	Station No.	Command	Command type	Number of blocks	Device Length	Device Name	Data	.....	Tail	Frame check
Frame (Example)	ENQ	H20	W(w)	SS	H01	H06	%MW100	H00E2		EOT	BCC
ASCII value	H05	H3230	H57(77)	H5353	H3031	H3036	H254D5731 3030	H30304 532		H04	

1 block(setting can be repeated up to max. 16 blocks)

Item	Explanation
BCC	When command is lowercase(r), only one lower byte of the value resulted by adding 1 Byte each to ASCII values from ENQ to EOT is converted into ASCII and added to BCC.
Number of blocks	This specifies how much of the blocks composed of "[device length][device name]" are in this request Format. This can be set up to 16. Therefore, the value of [Number of blocks] must be set between H01(ASCII value:3031)-H10(ASCII value:3030).
Device length(Name length of device)	This indicates the number of name's characters that means device, which is allowable up to 16 characters. This value is one of ASCII converted from hex type, and the range is from H01(ASCII value:3031) to H10(ASCII value:3130).
device	Address to be actually read is entered. This must be ASCII value within 16 characters, and in this name, digits, upper/lower case, and '%' only are allowable to be entered.
Data	If the value to be written in %MW100 area is H A, the data Format must be H000A. If the value to be written in %MW100 area is H A, the data Format must be H000A. In data area, the ASCII value converted from hex data is entered.

Ex.1

If type of data to be currently written is WORD, the data is H1234, ASCII code converted value of this is "31323334" and this content must be entered in data area. Namely, most significant value must be sent first, least significant value last.

Remark

1) Device data types of each block must be the same.
2) If data type is Bit, the data to be written is indicated by bytes of hex. Namely, if Bit value is 0, it must be indicated by H00(3030), and if 1, by H01(3031).

(3) Response format (ACK response)

Format name	Header	Station No.	Command	Command type	Tail	Frame check
Frame (Example)	ACK	H20	W(w)	SS	ETX	BCC
ASCII value	H06	H3230	H57(77)	H5353	H03	

Item	Explanation
BCC	When command is lowercase(r), only one lower byte of the value resulted by adding 1 Byte each to ASCII values from ACK to ETX is converted into ASCII and added to BCC, and sent.

(4) Response format (NAK response)

Format name	Header	Station No.	Command	Command type	Error code (Hex 2 Byte)	Tail	Frame check
Frame (Example)	NAK	H20	W(w)	SS	H4252	ETX	BCC
ASCII value	H15	H3230	H57(77)	H5353	H34323532	H03	

Item	Explanation
BCC	When command is lowercase(r), only one lower byte of the value resulted by adding 1 Byte each to ASCII values from NAK to ETX is converted into ASCII and added to BCC, and sent.
Error code	Hex and 2 bytes(ASCII code, 4 bytes) indicate error type. For the details, see 8.1.8 Error codes.

(5) Example

This example supposes that "HFF" is written in M230 of station No. 1 and BCC value is checked.

Computer request format (PC → MK80S Base Unit)

Format name	Header	Station No.	Command	Command type	Number of blocks	Device Length	Device Name	Data	Tail	Frame check
Frame (Example)	ENQ	H01	w	SS	H01	H06	%MW230	H00FF	EOT	BCC
ASCII value	H05	H3031	H77	H5353	H3031	H3036	H254D5732 3330	H30304646	H04	

For ACK response after execution of command(PC ← MK80S Base Unit)

Format name	Header	Station No.	Command	Command type	Tail	Frame check
Frame (Example)	ACK	H01	w	SS	ETX	BCC
ASCII value	H06	H3031	H77	H5353	H03	

For NAK response after execution of command(PC ← MK80S Base Unit)

Format name	Header	Station No.	Command	Command type	Error code	Tail	Frame check
Frame (Example)	NAK	H01	w	SS	Error code (2)	ETX	BCC
ASCII value	H15	H3031	H77	H5353	Error code (4)	H03	

4) Continuous writing of device(WSB)

(1) Introduction

This is a function that directly specifies PLC device memory and continuously writes data from specified address as much as specified length.

(2) Request format

Format name	Header	Station No.	Command	Command type	Device Length	Device	Number of data (Max.128 Byte)	Data	Tail	Frame check
Frame (Example)	ENQ	H100	W(w)	SB	H06	%MW100	H02	H11112222	EOT	BCC
ASCII value	H05	H3130	H57(77)	H5342	H3036	H254D57 313030	H3032	H31313131 32323232	H04	

Remark

1) Number of data specifies the number according to the type of device. Namely, if the data type of device is WORD, and number of data is 5, it means that 5 WORDs should be written.
2) Number of data can be used up to 64.

Item	Explanation
BCC	When command is lowercase(r), only one lower byte of the value resulted by adding 1 Byte each to ASCII values from ENQ to EOT is converted into ASCII and added to BCC.
Device length(Name length of variable)	This indicates the number of name's characters that means device, which is allowable up to 16 characters. This value is one of ASCII converted from hex type, and the range is from H01(ASCII value:3031) to H10(ASCII value:3130).
device	Address to be actually read. This must be ASCII value within 16 characters, and in this name, digits, upper/lower case, and '%' only are allowable to be entered.

Remark

1) Protocol of WSB doesn't have the number of blocks.

(3) Response Format (ACK response)

Format name	Header	Station No.	Command	Command type	Tail	Frame check
Frame (Example)	ACK	H10	W(w)	SB	ETX	BCC
ASCII value	H06	H3130	H57(77)	H5342	H03	

Item	Explanation
BCC	When command is lowercase(r), only one lower byte of the value resulted by adding 1 Byte each to ASCII values from ACK to ETX is converted into ASCII and added to BCC, and sent.

(4) Response Format (NAK response)

Format name	Header	Station No.	Command	Command type	Error code (Hex 2 Byte)	Tail	Frame check
Frame (Example)	ENQ	H10	W(w)	SB	H1132	EOT	BCC
ASCII value	H05	H3130	H57(77)	H5342	H31313332	H03	

Item	Explanation
BCC	When command is lowercase(r), only one lower byte of the value resulted by adding 1 Byte each to ASCII values from NAK to ETX is converted into ASCII and added to BCC, and sent.
Error code	Hex and 2 bytes(ASCII code, 4 bytes) indicate error type. For the details, see 8.1.8 Error codes.

(5) Example

This example supposes that 2 byte HAA15 is written in D000 of station No. 1 and BCC value is checked.

Computer request Format (PC → MK80S Base Unit)

Format name	Header	Station No.	Command	Command type	Device Length	Device	Number of data	Data	Tail	Frame check
Frame (Example)	ENQ	H01	w	SB	H06	%DW0000	H01	HAA15056F	EOT	BCC
ASCII value	H05	H3031	H77	H5342	H3036	H254457303030	H3031	H414131353 0353646	H04	

For ACK response after execution of command (PC ← MK80S Base Unit)

Format name	Header	Station No.	Command	Command type	Tail	Frame check
Frame (Example)	ACK	H01	W	SB	ETX	BCC
ASCII value	H06	H3031	H77	H5342	H03	

For NAK response after execution of command(PC ← MK80S Base Unit)

Format name	Header	Station No.	Command	Command type	Error code	Tail	Frame check
Frame (Example)	NAK	01	W	SB	Error code (2)	ETX	BCC
ASCII value	H15	H3031	H77	H5342	Error code (4)	H03	

5) Monitor register(X##)

(1) Introduction

Monitor register can separately register up to 10 in combination with actual variable reading command, and carries out the registered one through monitor command after registration.

(2) PC request Format

Format name	Header	Station No.	Command	Registration No.	Registration Format	Tail	Frame check
Frame (Example)	ENQ	H10	X(x)	H09	Refer to registration Format	EOT	BCC
ASCII value	H05	H3130	H58(78)	H3039	[ ]	H04	

Item	Explanation
BCC	When command is lowercase(x), only one lower byte of the value resulted by adding 1 byte each to ASCII values from ENQ to EOT is converted into ASCII, added to BCC.
Register No.	This can be registered up to 10(0 to 9, H00-H09), and if an already registered No. is registered again, the one currently being executed is registered.
Register Format	This is used to before EOT in command of Formats of separate reading of variable, continuous reading, and named variable reading.

Register Format : Register Format of request Formats must select and use only one of the followings.

← Individual reading of device

RSS	Number of blocks(2 Byte)	Device length (2 Byte)	Device name (16 Byte)	...

1 block(max. 16 blocks)

↑ Continuous reading of device

RSB	Device length (2 Byte)	Device name (16 Byte)	Number of data

(3) Response Format (ACK response)

Format name	Header	Station No.	Command	Registration No.	Tail	Frame check
Frame (Example)	ACK	H10	X(x)	H09	ETX	BCC
ASCII value	H06	H3130	H58(78)	H3039	H03	

Item	Explanation
BCC	When command is lowercase(r), only one lower byte of the value resulted by adding 1 Byte each to ASCII values from ACK to ETX is converted into ASCII and added to BCC, and sent.

(4) Response Format (NAK response)

Format name	Header	Station No.	Command	Registration No.	Error code (Hex 2Byte)	Tail	Frame check
Frame (Example)	ACK	H10	X(x)	H09	H1132	ETX	BCC
ASCII value	H06	H3130	H58(78)	H3039	H31313332	H03	

Item	Explanation
BCC	When command is one of lower case(r), only one lower byte of the value resulted by adding 1 Byte each to ASCII values from NAK to ETX is converted into ASCII and added to BCC, and sent.
Error code	Hex and 2 bytes(ASCII code, 4 bytes) indicate error type. For the details, see 8.1.8 Error codes.

(5) Example

This example supposes that device M000 of station NO. 1 is monitor registered.

Computer request Format (PC → MK80S Base Unit)

Format name	Header	Station No.	Command	Registration No.	Registration Format				Tail	Frame check
					R##	Number of blocks	Device length	Device name		
Frame (Example)	ENQ	H01	x	H01	RSS	H01	H06	%MW000	EOT	BCC
ASCII value	H05	H3031	H78	H3031	H525353	H3031	H3036	H255457 303030	H04	

For ACK response after execution of command(PC ← MK80S Base Unit)

Format name	Header	Station No.	Command	Registration No.	Tail	Frame check
Frame (Example)	ACK	H01	x	H01	ETX	BCC
ASCII value	H06	H3031	H78	H3031	H03	

For NAK response after execution of command (PC ← MK80S Base Unit)

Format name	Header	Station No.	Command	Registration No.	Error code	Tail	Frame check
Frame (Example)	NAK	H01	x	H01	Error code (2)	ETX	BCC
ASCII value	H15	H3031	H78	H3031	Error code (4)	H03	

6) Monitor execution(Y##)

(1) Introduction

This is a function that carries out the reading of the variable registered by monitor register. This also specifies a registered number and carries out reading of the variable registered by the number.

(2) PC request Format

Format name	Header	Station No.	Command	Registration No.	Tail	Frame check
Frame (Example)	ENQ	H10	Y(y)	H09	EOT	BCC
ASCII value	H05	H3130	H59(79)	H3039	H03	

Item	Explanation
Register No.	Register No. uses the same number registered during monitor register for monitor execution. It is possible to set from 00-09(H00-H09).
BCC	When command is lowercase(y), only one lower byte of the value resulted by adding 1 byte each to ASCII values from ENQ to EOT is converted into ASCII, added to BCC.

(3) Response Format(ACK response)

← In case that the register Format of register No. is the Individual reading of device

Format name	Header	Station No.	Command	Registration No.	Number of Blocks	Number of data	Data	Tail	Frame check
Frame (Example)	ACK	H10	Y(y)	H09	H01	H04	H9183AABB	ETX	BCC
ASCII value	H06	H3130	H59(79)	H3039	H3031	H3034	H3931383341414242	H03	

↑ In case that the register Format of register No. is the continuous reading of device

Format name	Header	Station No.	Command	Registration No.	Number of data	Data	Tail	Frame check
Frame (Example)	ACK	H10	Y(y)	H09	H04	H9183AABB	ETX	BCC
ASCII value	H06	H3130	H59(79)	H3039	H3034	H3931383341414242	H03	

(4) Response Format (NAK response)

Format name	Header	Station No.	Command	Registration No.	Error code (Hex 2Byte)	Tail	Frame check
Frame (Example)	NAK	H10	Y(y)	H09	H1132	ETX	BCC
ASCII value	H15	H3130	H59(79)	H3039	H31313332	H03	

Item	Explanation
BCC	When command is lowercase(y), only one lower byte of the value resulted by adding 1 Byte each to ASCII values from NAK to ETX is converted into ASCII and added to BCC, and sent.
Error code	Hex and 2 bytes (ASCII code, 4 bytes) indicate error type. For the details, see 8.1.8 Error codes.

(5) Example

This example supposes that registered device No. 1 of station No. 1 is read. and BCC value is checked. And it is supposed that device M000 is registered and the number of blocks is 1.

← Computer request Format (PC → MK80S Base Unit)

Format name	Header	Station No.	Command	Registration No.	Tail	Frame check
Frame (Example)	ENQ	H01	y	H01	EOT	BCC
ASCII value	H05	H3031	H79	H3031	H04	

↑ For ACK response after execution of command (PC ← MK80S Base Unit)

Format name	Header	Station No.	Command	Registration No.	Number of Blocks	Number of data	Data	Tail	Frame check
Frame (Example)	ACK	H01	y	H01	H01	H04	H23422339	ETX	BCC
ASCII value	H06	H3031	H79	H3031	H3031	H3034	H3233343232333339	H03	

→ For NAK response after execution of command (PC ← MK80S Base Unit)

Format name	Header	Station No.	Command	Registration No.	Error code	Tail	Frame check
Frame (Example)	NAK	H01	y	H01	Error code (2)	ETX	BCC
ASCII value	H15	H3031	H79	H3031	Error code (4)	H03	

7) Reading PLC Status(RST)

(1) Introduction

This is a function that reads flag list including operating status of PLC and error information.

(2) PC request Format

Format name	Header	Station No.	Command	Command type	Tail	Frame check
Frame (Example)	ENQ	H0A	R(r)	ST	EOT	BCC
ASCII value	H05	H3041	H52(72)	H5354	H04	

Item	Explanation
BCC	When command is lowercase(r), only one lower byte of the value resulted by adding 1 Byte each to ASCII values from ENQ to EOT is converted into ASCII and added to BCC.

(3) Response Format (ACK response)

Format name	Header	Station No.	Command	Command type	PLC status data (Hex 20 Byte)	Tail	Frame check
Frame (Example)	ACK	H0A	R(r)	ST	Status data Format	ETX	BCC
ASCII value	H06	H3041	H52(72)	H5354	[ ]	H03	

Item	Explanation
BCC	When command is lowercase(r), only one lower byte of the value resulted by adding 1 Byte each to ASCII values from ACK to ETX is converted into ASCII and added to BCC, and sent.

(4) Response Format (NAK response)

Format name	Header	Station No.	Command	Command type	Error code (Hex 2 Byte)	Tail	Frame check
Frame (Example)	NAK	H0A	R(r)	ST	H1132	ETX	BCC
ASCII value	15	3041	5272	5354	31313332	03	

Item	Explanation
BCC	When command is one of lower case(r), only one lower byte of the value resulted by adding 1 Byte each to ASCII values from NAK to ETX is converted into ASCII and added to BCC, and sent.
Error code	Hex and 2 bytes(ASCII code, 4 bytes) indicate error type. For the details, see 8.1.8 Error codes.

Item	Explanation
PLC status data	PLC status data: data Format is 20 bytes in hex Format and converted into ASCII code. Its contents are constituted as below table after converting ASCII code into hex data.

Status data Format

Data type	Contents	Status data order (Hex data)
Byte	Null	H00(Offset)
Byte	Null	H01
Byte	Null	H02
Byte	Null	H03
Byte	Type of CPU	H04
Byte	Version Number	H05
Byte	Null	H06
Byte	CPU Mode	H07
Byte	Null	H08
Byte	Connection Status	H09
WORD	Reserved	H0A(L) ~ H0B(H)
WORD	Reserved	H0C(L) ~ H0D(H)
WORD	Reserved	H0E(L) ~ H0F(H)
WORD	Reserved	H10(L) ~ H11(H)
WORD	Reserved	H12(L) ~ H13(H)

-. CPU Type

CPU Type	Code
MK80S	41
K200SA (K3P-07AS)	3A
K200SB (K3P-07BS)	3B
K200SC (K3P-07CS)	3C
K300S (K4P-15AS)	33
K1000S (K7P-30AS)	32

-. Version No.

Ex) Bit

0	0	0	1	0	0	1	0

Indicates Version 1.2

-. CPU Mode

Ex) Bit

-	-	-	-	0	0	0	0

RUN Mode
STOP Mode
PAUSE Mode
DEBUG Mode

-. Connection

Ex) Bit

-	-	-	-	-	-	0	0

Local Connection
Remote Connection

(5) Example

This example supposes that the status of MK80S Base Unit of station No. 1 is read.

Computer request Format (PC → MK80S Base Unit)

Format name	Header	Station No.	Command	Command type	Tail	Frame check
Frame (Example)	ENQ	H01	R(r)	ST	EOT	BCC
ASCII value	H05	H3031	H52(72)	H5354	H04	

For ACK response after execution of command (PC ← MK80S Base Unit)

Format name	Header	Station No.	Command	Command type	Status data	Tail	Frame check
Frame (Example)	ACK	H01	R(r)	ST	See status data Format	ETX	BCC
ASCII value	H06	H3031	H52(72)	H5354		H03	

For NAK response after execution of command (PC ← MK80S Base Unit)

Format name	Header	Station No.	Command	Command type	Error code	Tail	Frame check
Frame (Example)	NAK	H01	R(r)	ST	Error code (2)	ETX	BCC
ASCII value	H15	H3031	H52(72)	H5354	Error code (4)	H03	

8.1.7 1:1 Built-in communication between MK80S's

1) Introduction

1:1 built-in communication between MK80S's is that which constitutes a built-in communication system with the method of 1(master) : 1(slave). Setting Base parameter and communication parameter in KGLWIN can easily constitute this system. Communication protocol currently applied is the same with Cnet I/F used for MASTER-K. Main functions are following.

- It can organize device area into 64 data access blocks by WORD unit, and set a communication time-out limit for each block.
- It can reestablish flag in relation with error codes and slave PLC operating mode according to parameter setting.
- It can reset flag related with error codes and sending/receiving error frequency of each parameter.
- It monitors communication status, using monitoring function of KGLWIN.

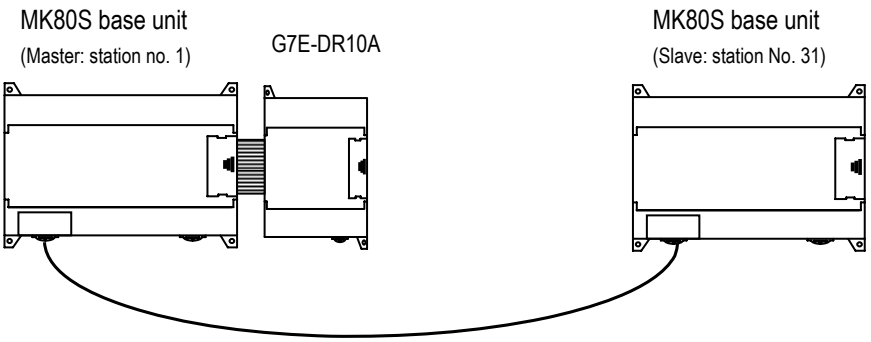

1:1 built-in communication between K80S's

This communication cabling map is the same for (3) 1:1 Connecting between MK80S's in 8.1.2 "System configuration method using built-in communication."

2) Parameter setting

(1) Communication Parameter Setting

- Open a new project file from KGLWIN

  -MK80S must be selected as PLC type.

- After selecting communication parameter from KGLWIN and clicking twice, this window comes up.

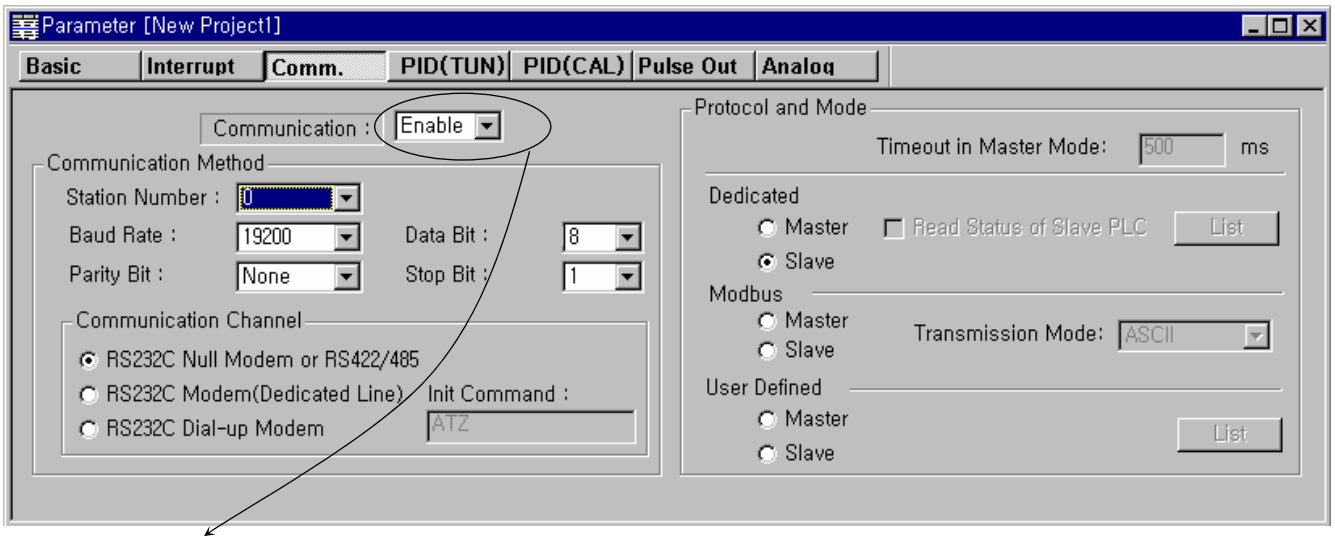

To process 1:1 built-in communication between MK80S's must be set Enabled

- Set according to the following table

Item	Contents
Station No.	Sets one of station from 0 to 31.
Baud rate	Sets one of 1200, 2400, 4800, 9600, 19200, 38400, 57600 bps
Data bit	Sets one of 7 or 8 Bits
Parity bit	Sets one of none, Even, Odd
Stop bit	Sets one of 1 or 2 Bit(s)
Communication channel	• RS232C null modem or RS422/485: can be selected as a communication channel when communication is processed by built-in functions of MK80S Base Unit or Cnet I/F module (G7L-CUEC). • RS232C dedicated modem: can be selected when communication is processed by Cnet I/F module (G7L-CUEC). • RS232C dial-up modem: can be selected when common modem communication calling the opponent station is processed by Cnet I/F module (G7L-CUEC). * Notes: RS232C dedicated modem and RS232C dial-up modem communication can be processed only by Cnet I/F module (G7L-CUEC) supporting RS-232C, not Cnet I/F module (G7L-CUEC) supporting RS-422/485.

Item	Contents
Timeout in Master Mode	• It's an interval waiting after sending request frame from Master MK80S before receiving a response. • default value is 500ms. • Setting must be done in consideration of maximum interval of sending and receiving cycle of a master PLC. • If the time out is less than the maximum interval of the s/r cycle, error can occur.
Dedicated Master/Slave	Master MK80S can read from and write on Slave MK80S.
Read status of slave PLC	can be select especially when you read Slave MK80S for monitoring, but not for the other purposes, lest it may cause decreasing communication speed.

(2) Setting registration list

- If you click 'master' from 'exclusive use' in 'protocol and sending mode,' 'List' button will be activated.

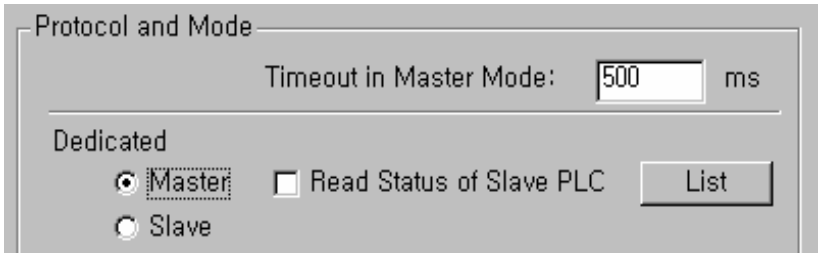

- Click the button to open the registration list window.

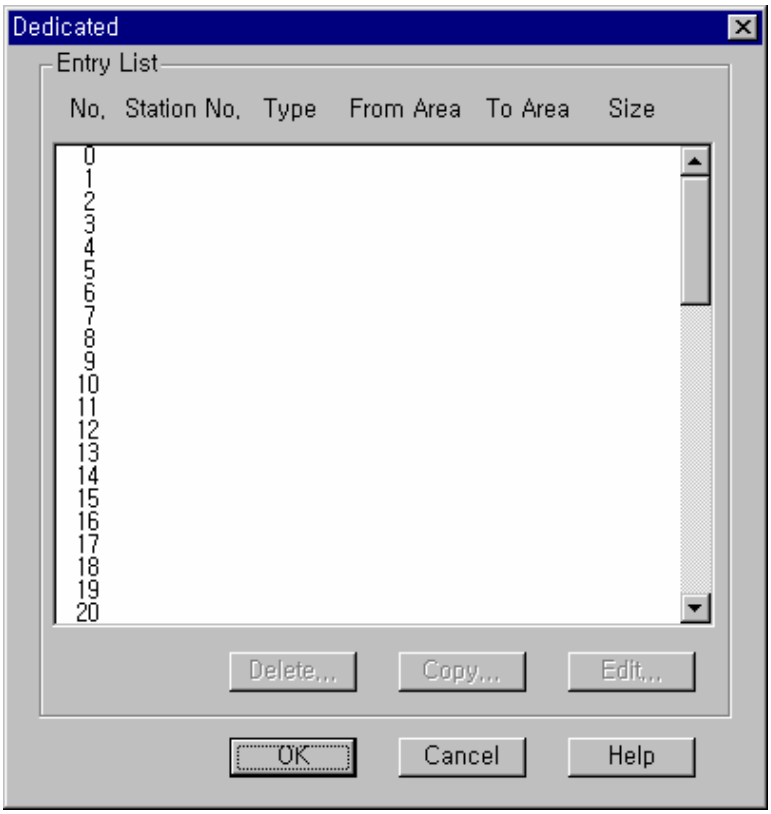

(3) Total 64 data blocks can be assigned. But it's not possible to set a register number.

(4) Sending and receiving data size can be set up to 60 WORDs. There's no cycle for sending and receiving.

- Setting device area

  -Sending : reading device area P,M,L,K,T,C,D,S,F saving device area : P,M,L,K,T,C,D,S

  -Receiving: reading device area P,M,L,K,T,C,D,S,F saving device area : P,M,L,K,T,C,D,S

(6) This is a window you can change 'dedicated use 1' setting.

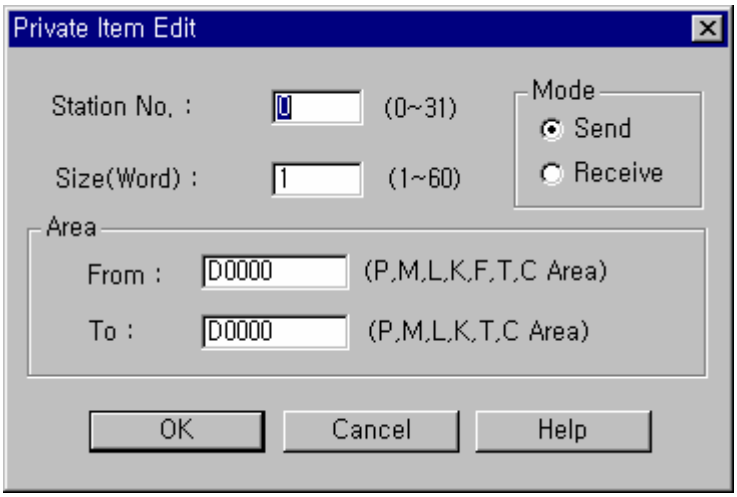

- Station number : set the number of the slave or opponent station.
- Mode : click 'send' for writing data on the slave station, or 'receive' for reading from it.
- Size : data size for reading and writing of the master station can be specified up to 60 WORDs.
- Area:

Item	Send mode	Receive mode
Area(from)	that is in the master station to temporarily save the data to be written.	that is in the slave station for the data to be read.
Area(to)	that is in the slave station to write the data.	that is in the master station to temporarily save the data to be read.

3) Flag related with operating status

(1) Sending/receiving error count for each station (total 32 stations)

Error code is saved following area according to station

Station	Device	Station	Device	Remarks
0,1	D4400	16,17	D4408	Each device contains the Information of 2 station The information of each station is saved in 1byte.
2,3	D4401	18,19	D4409	
4,5	D4401	20,21	D4410	
6,7	D4403	22,23	D4411	
8,9	D4404	24,25	D4412	
10,11	D4405	26,27	D4413	
12,13	D4406	28,29	D4414	
14,15	D4407	30,31	D4415	

Error code

Error code	Contents	Remarks
1	Timeout error for response	
2	Received NAK	

(2) Sending/receiving error contents of each station (total 32 stations)

Error count number is saved following area according to station

Station	Device	Station	Device	Remarks
0,1	D4416	16,17	D4424	Each device contains the Information of 2 station The information of each station is saved in 1byte.
2,3	D4417	18,19	D4425	
4,5	D4418	20,21	D4426	
6,7	D4419	22,23	D4427	
8,9	D4420	24,25	D4428	
10,11	D4421	26,27	D4429	
12,13	D4422	28,29	D4430	
14,15	D4423	30,31	D4431	

(3) Slave PLC mode and error contents of each station (total 32 stations)

Error Information of PLC is saved following area according to station

Station	Device	Station	Device	Remarks
0,1	D4432	16,17	D4440	Each device contains the Information of 2 station The information of each station is saved in 1byte.
2,3	D4433	18,19	D4441	
4,5	D4434	20,21	D4442	
6,7	D4435	22,23	D4443	
8,9	D4436	24,25	D4444	
10,11	D4437	26,27	D4445	
12,13	D4438	28,29	D4446	
14,15	D4439	30,31	D4447	

Errors:

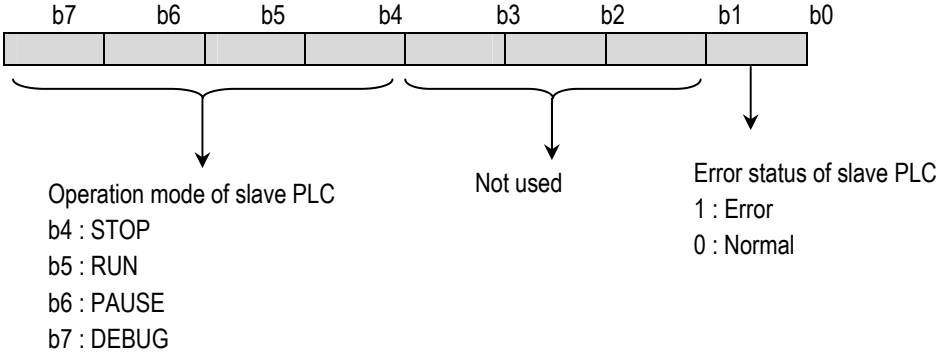

(4) Status flag of the master PLC

Status Information of master PLC is saved in D4448

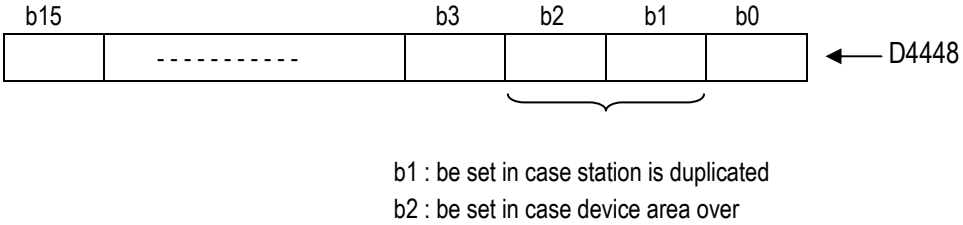

(5) Max/min/current sending/receiving cycle of set parameter

Contents: the interval between after sending and before receiving

Item	Saved area
Max.	D4449 – D4450
Min.	D4451 – D4452
Current	D4453 – D4454

4) Example

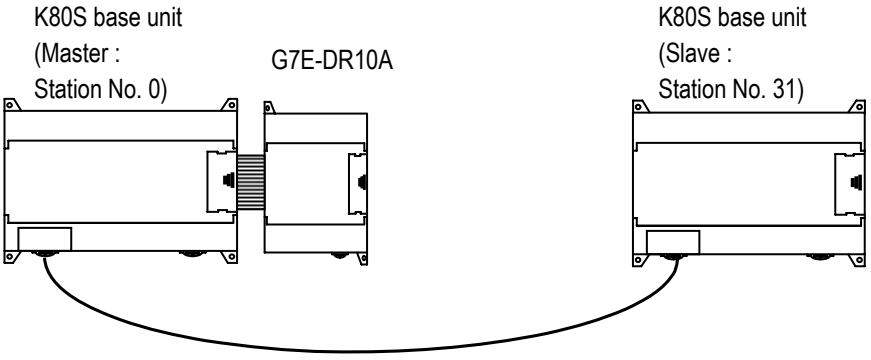

1:1 built-in communication between K80S's

-. Device M000 is increased by program per 1 second.

-. Writing M000 to output area P004 of slave

-. Reading slave's output area P004 to master's output area P009

The following example uses the above diagram to explain the operation of MK80S Base Unit.

-The data of the master MK80S Base Unit is increased by INCP instruction and sent to be written on the output contact point P04of the slave MK80S Base Unit. And in return, the master MK80S Base Unit reads the data that is written on the output contact point of the slave MK80S to write them on the output contact point of extended digital input/output module, G7E-DR10A.

(1) Setting communication parameter of the master station and its program

Work on the master station 0.

Open a new project file and a new program for the master station.

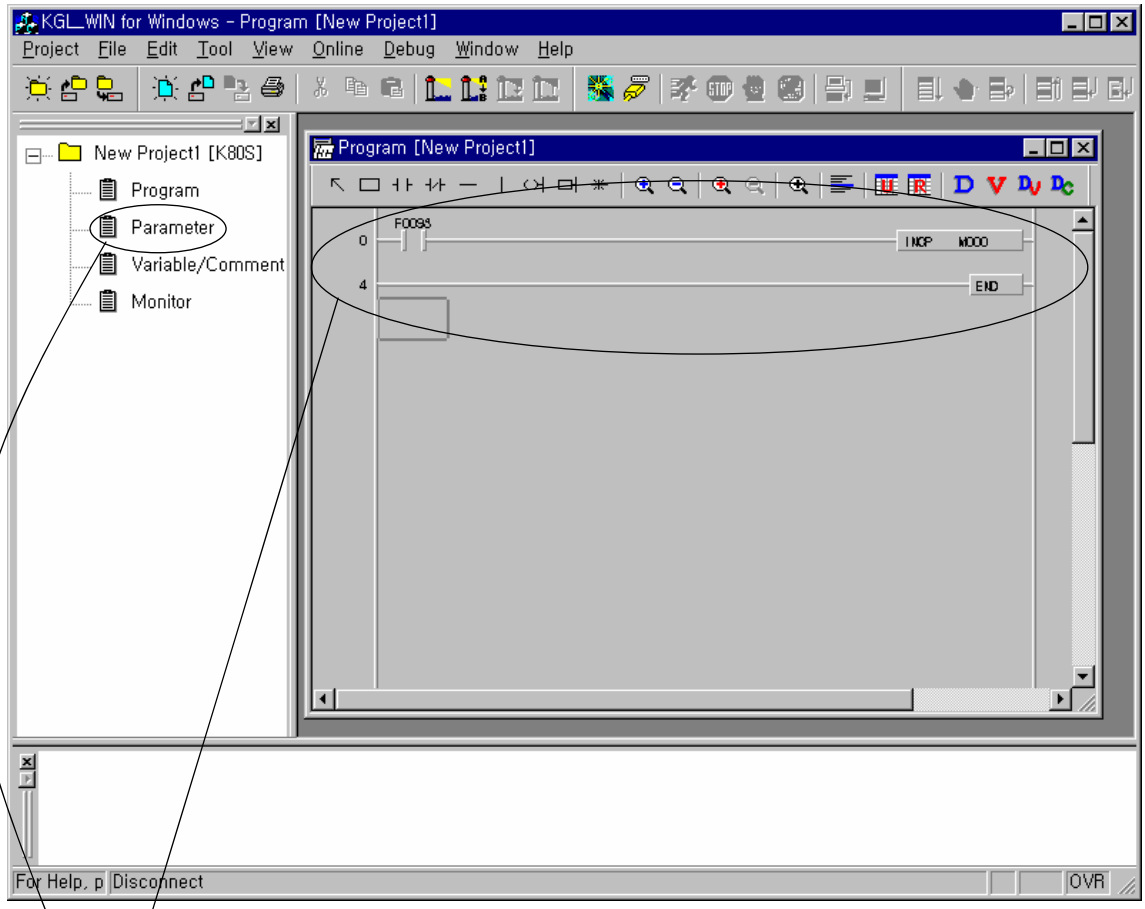

Edit program that M000 is increased per 1second.

Double click parameter item for parameter settings.

If you click the Comm. button in parameter window in KGLWIN, you can see the following window of the communication parameter.

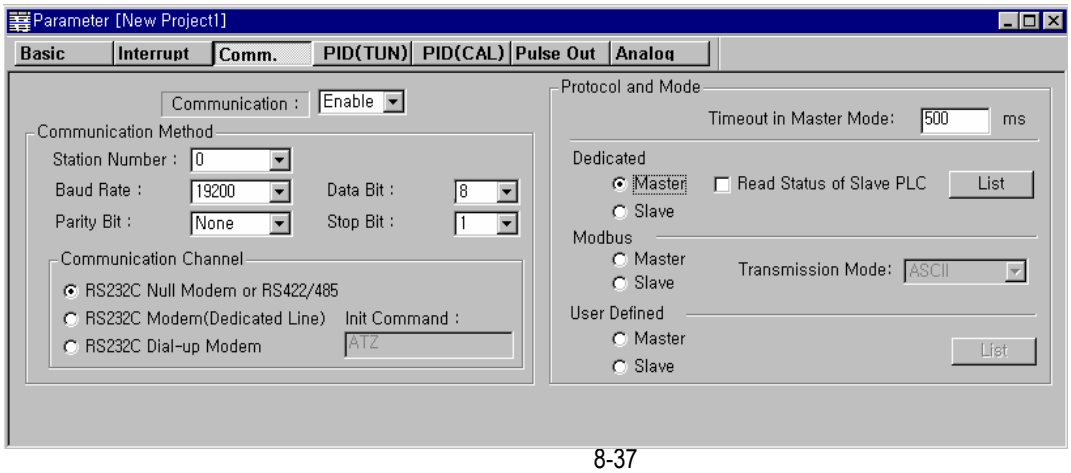

-Set parameters as the following table.

Communication Method							Protocol and mode
Communication	Station no.	Baud rate	Data bit	Parity bit	Stop bit	Communication channel	Dedicated
Enable	0	19200	8	None	1	RS232C null modem or RS422/485	Master

Click 'List' button to activate registration list window

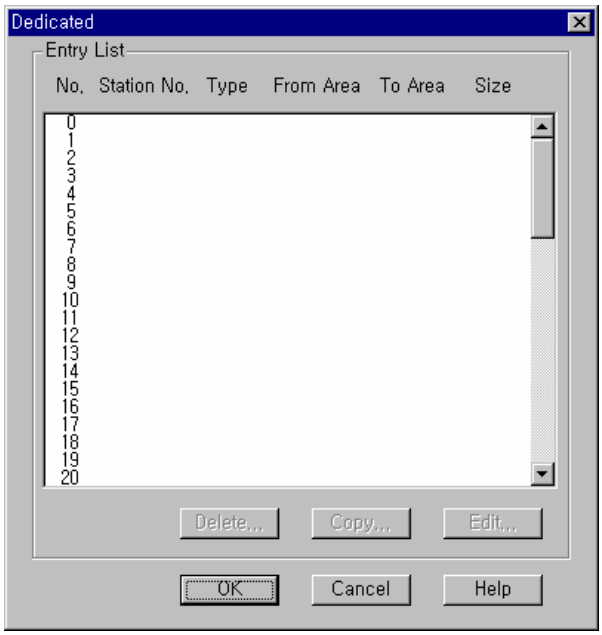

If the list number '0' in 'List' window is double clicked, another window for 'Private 1 item 0 edit' is open

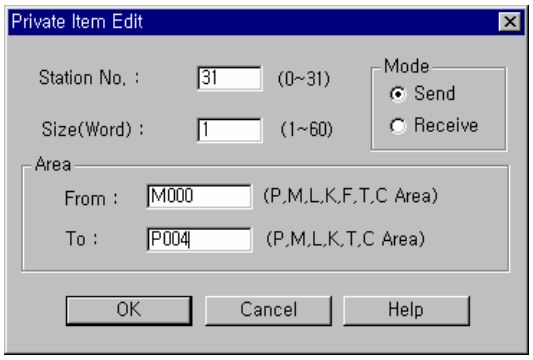

- Set parameters like the following table and click 'OK' button.

Station No.	Size	Mode	Area to read(From)	Area to save(to)
31	1	Send	M000 (See the above)	P004 (See the above)

The registration list '0' registered in the registration list can be confirmed through a window like the following.

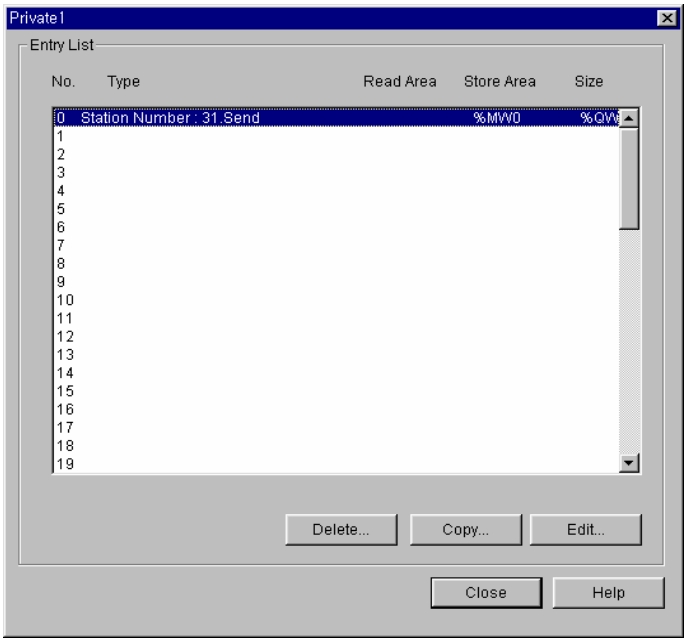

Double click the No. 1 for receive parameter setting

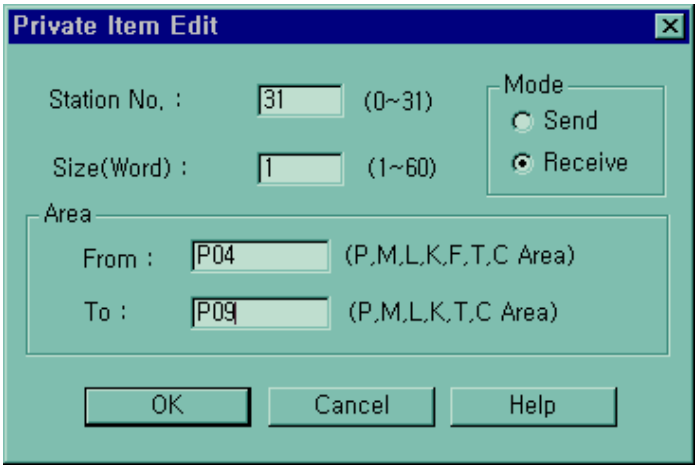

Station No.	Size	Mode	Area to read(From)	Area to save(to)
31	1	Receive	P004 (See the above)	P009 (See the above)

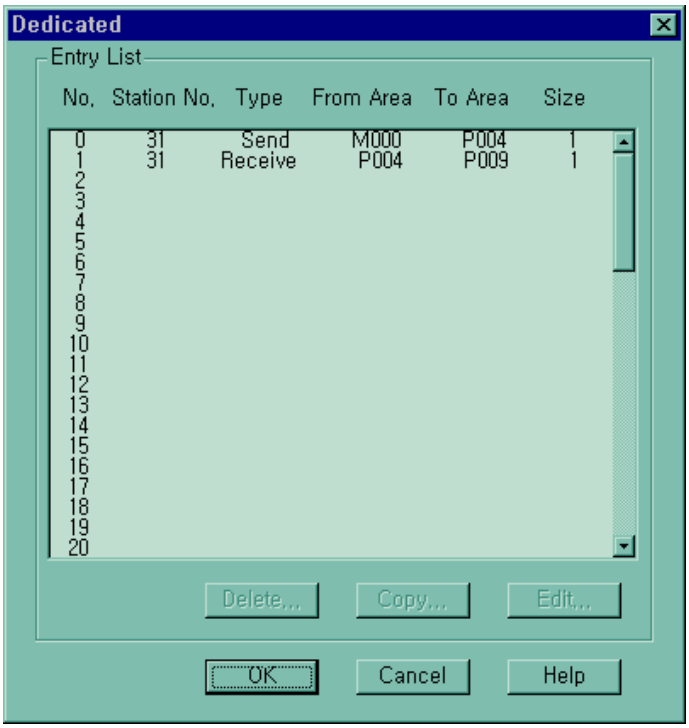

- Set parameters like the following table and click 'OK' button.

Program

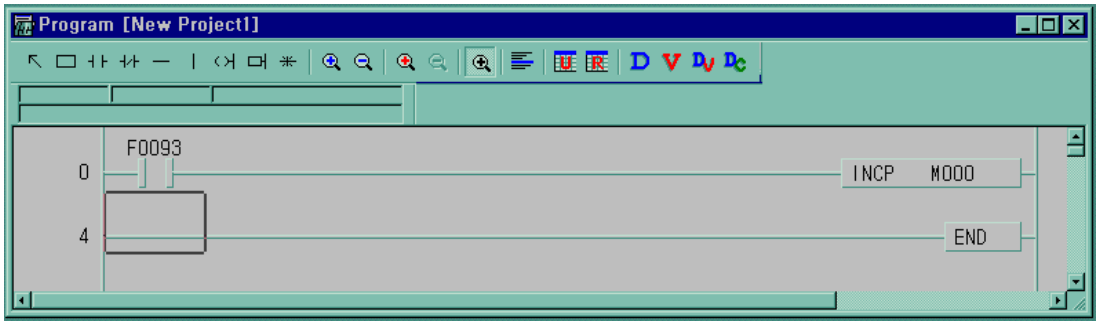

(2) Parameter setting for slave station.

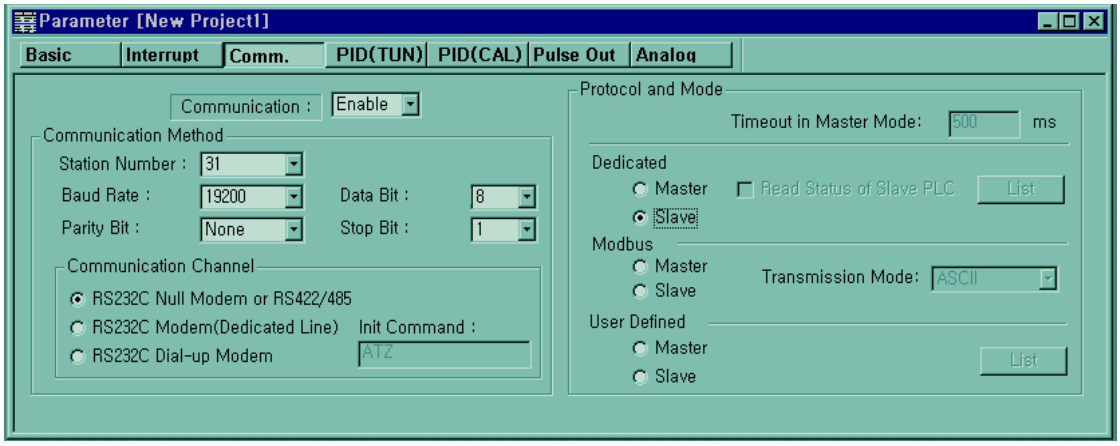

-Set parameters as the following table.

Communication Method							Protocol and mode
Communication	Station no.	Baud rate	Data bit	Parity bit	Stop bit	Communication channel	Dedicated
Enable	31	19200	8	None	1	RS232C null modem or RS422/485	slave

Slave station does not need program.

8.1.8 Error code

Error code	Error type	Error condition and causes	Treatment
H0001	PLC system error	* Interface with PLC is impossible.	* On/Off the power
H0011	Data error	Errors occurred when exchanging ASCII data to numbers.	* Check if other letters than capitals/small letters, numbers, and ('%','_','.') in device and data, correct and execute again.
H0021	Command error	Set a wrong device memory that is to use commands other than w (W), r(R), x (X), y (Y), s (S)	* Check commands.
H0031	Command type error	Wrong command type that is to use characters like wSS, wSB using other letters from "SS" or "SB"	* Check command type
H1132	Device memory error	Set wrong device memory other than P,M,L,K,T,C,F,D,S	* Check device type
H1232	Data size error	The number of data in execution is 0 or bigger than 128 bytes.	* Correct length of data (If data type is bite, the number of data must be from 1 ~ 128.)
H2432	Data type error	When use other characters than x (X), w (W) at MK80S. When use b (B), d (D) at MK80S. Ex1) Use commands like %DB or %DD.	* Check data type and execute again.
H7132	Device request Format error	* When omit %.	* Check Format, correct and execute again.
H2232	Area exceeding error	* When exceed assigned area. Ex1) MX2000 or %DW5000	* Correct the size within the assigned area and execute again.
H0190	Monitor execution error	* Exceeding limit of register No.	* Rearrange the monitor register no. not to go over than 9 and reset.
H0290	Monitor register error	* Exceeding limit of register No.	* Rearrange the monitor register no. not to go over than 9 and reset.
H6001	Syntax error	* When use commands that aren't supported. Ex1) When use device like %MX100 in RSB command	* Be familiar with the manual. * Check if the system stopped. * reset
H6010	Syntax error	* OVER-RUN, FRAME error	* Be familiar with the manual.
H6020	Syntax error	* TIME_OUT error	* Confirm the setting of the communication ports of RS-232C. * reset
H6030	Syntax error	* Syntax error in commands	* Check if each sends frame has ENQ, EOT.

(Continued)

Error code	Error type	Error condition and causes	Treatment
H6040	Syntax error	When a FRAME text exceeds over 256 bytes.	* Rearrange send frame not to go over 256 bytes.
H6050	Syntax error	* BCC error	* Check if BCC is right.

8.2 User Defined Protocol Communication

8.2.1 Introduction

User Defined Protocol Communication allows users who do communication between MK80S Basic Unit and other kind of device to define the other company's protocol at MASTER-K PLC. There're a number of kinds of protocols made by many companies, that it's difficult to have all protocols in it. So if a user defines a protocol that can be applied to his/her purpose, MK80S Basic Unit executes the communication with the other kind of device through the defined protocol. For this, protocol frame must be defined in KGLWIN (Version 2.0 or higher). And exact knowledge about the contents of the protocol defined by the user is vital in making the communication possible. KGLWIN (Version 2.0. or higher) can download a user defined protocol frame into MK80S Basic Unit and it is saved(it is not erased by power's off/on). But protocol frames are damaged to download with changes of parameter, or to fail to back up the data, caused by lower back-up battery voltage than the standard. For using user-defined mode, he/she should program with instruction controlling sending of PLC as well as edit frames. This section explains UDPC setting & usage.

8.2.2 Parameter Setting

1) Setting Communications Parameter

(1) Open a new project file from KGLWIN
Select MK80S as PLC type

(2) After setting communication parameter at KGLWIN. Double click it to activate this window.

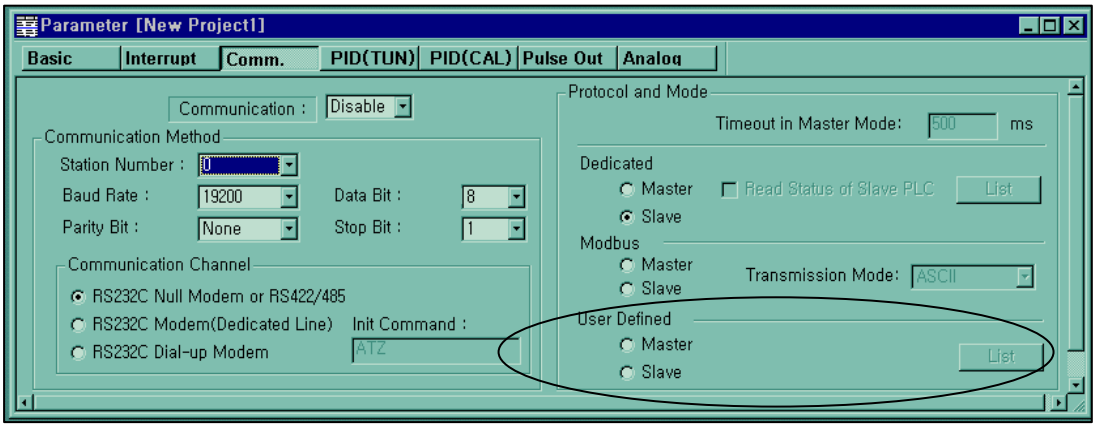

(3) Set according to the following table.

Item	Setting range
Station No.	Station no. from 0 to 31.
Baud Rate	1200, 2400, 4800, 9600, 19200, 38400, 57600 bps
Data Bit	7 or 8 bits
Parity Bit	0, Even or Odd
Stop Bit	1 or 2 bit(s)
Communication Channel	● RS232C Null Modem or RS422/485 : It's a communication channel for the communication, using MK80S base unit's built-in communication and Cnet I/F module (G7L-CUEC). ● RS232C Modem (Dedicated Line) : It's to be selected for the communication, using an dedicated modem with Cnet I/F module (G7L-CUEB). ● RS232C Dial Up Modem : It's to be selected for the general communication connecting through the telephone line by dial up modem and Cnet I/F module (G7L-CUEB). Footnote) Using Cnet I/F module (G7L-CUEB) supporting RS232C, RS232C dedicated or dial-up modem communication can be done, but not through Cnet I/F module (G7L-CUEC) supporting RS422/485.
Timeout in Master Mode	● It's the time waiting a responding frame since the master MK80S base unit sends a request frame. ● The default value is 500ms. ● It must be set in consideration of the max. periodical time for sending/receiving of the master PLC. ● If it's set smaller than the max. send/receive periodical time, it may cause communication error.
User Define Master / Slave	If it is set as the master, it's the subject in the communication system. If it's set as the slave, it only responds to the request frame of the master.

2) Setting frame

(1) Select one out of user defined terms of protocol and mode in communication parameter, registration “List” button is activated.

(2) Click “List” button to activate the following window.

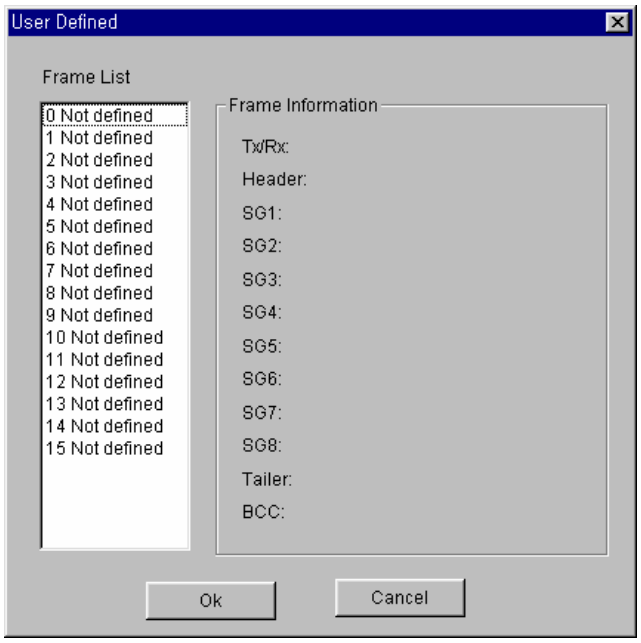

(3) Select one of 1～15 in frame list to open the following window.

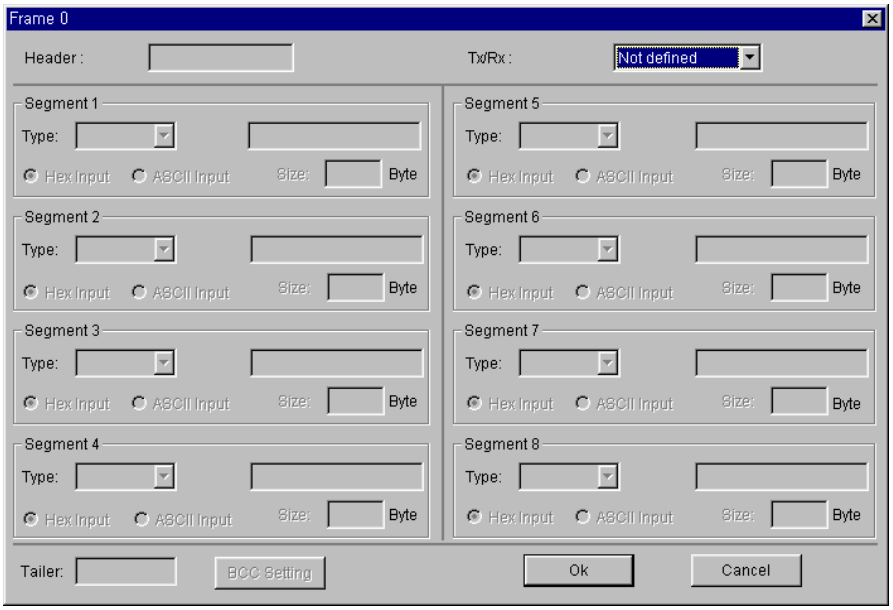

① Frame specification

- Header

Used in [Header] type.

Possible characters, as headers are 1 alphabet letter, 1 numeric number, or control characters as below

Control character

Available Control Code					
NUL(h00)	STX(h02)	ETX(h03)	EOT(h04)	ACK(h06)	NAK(h15)
SOH(h01)	ENQ(h05)	BEL(h07)	BS(h08)	HT(h09)	LF(h0A)
VT(h0B)	FF(h0C)	CR(h0D)	SO(h0E)	S1(h0F)	DLE(h10)
DC1(h18)	DC2(h12)	DC3(h13)	DC4(h14)	SYN(h16)	ETB(h17)
CAN(h18)	EM(h19)	SUB(h1A)	ESC(h1B)	FS(h1C)	GS(h1D)
RS(h1E)	US(h1F)	Del(H7F)			

Example 1) [NUL] , [ENQ] , [1] , [A] : Possible
Example 2) NUL, ENQ , [12] , [ABC] : impossible

– It is allowed to be only 3 consecutive characters.

Example 1) [ENQ][STX][NUL] : Possible
Example 2) [A][NUL][ENQ][STX] : impossible

- Send / Receiv

Not defined : It is the initial value that doesn't declare a frame format.
Send : It is that declares send frame.
Receive : It is that declares receive frame.
When Frame 0 window is activated, Tx/Rx term is set as "Not defined," and all the segments are not activated.

Segment (1-8) : Enter segment by segment to separate fixed sending data area (CONSTANT) and device area (Array).

Item	Contents
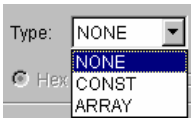	To set a segment type, there're NONE (not defined), CONST (fixed data area), ARRAY (Device area). CONST declares commands and fixed data that are used for communication frame and ARRAY is used to input and save the data needed for interactive communication. ARRAY type must be always set by byte.
	This field is to declare commands and fixed data that will be used in communication frame and constant data to be declared by inputting. ASCII input must be done within 10 characters and hex within 20 characters. If the number exceeds the limit, set the next segment as the same type and continue to input there. As an dedicated protocol communication, 10RSB06%MW10006 is a frame to execute reading 6 word data from M100 at the slave station no. 16. Ex1) 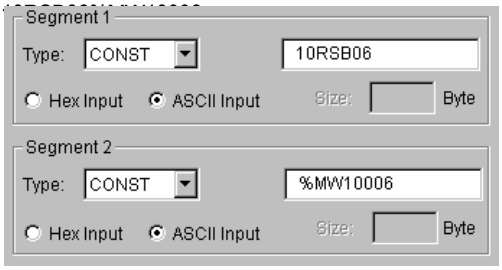 If the segment is declared as ARRAY type, designate transmitting device(P,M,L,K,F,T,C,D) and number of transmitting **byte** Ex2) If you want to transmit D000 ~ D003, the setting is as below. (transmitting device : D000 , number of transmitting : 6 bytes)
	It is a radio button to select the input type of commands. There're 2 kinds as hex or ASCII value. Ex1) ASCII : 1 0 R S B 0 6 % M W 1 0 0 Ex2) Hex : 31 30 52 53 42 30 36 25 57 44 31 30 30
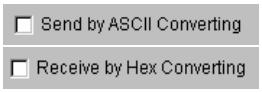	If ARRAY is set, it asks whether it would convert data to ASCII to send (at send frame), or convert to hexadecimal to receive(at receive frame).
	If ARRAY is set, the size of area is to be set by byte. **The unit is a byte.**

- Tail

Used in [Tail] type.
Possible characters as headers are 1 alphabet letter, 1 numeric number, or control characters as below

Control character

Available Control Code					
NUL(h00)	STX(h02)	ETX(h03)	EOT(h04)	ACK(h06)	NAK(h15)
SOH(h01)	ENQ(h05)	BEL(h07)	BS(h08)	HT(h09)	LF(h0A)
VT(h0B)	FF(h0C)	CR(h0D)	SO(h0E)	S1(h0F)	DLE(h10)
DC1(h18)	DC2(h12)	DC3(h13)	DC4(h14)	SYN(h16)	ETB(h17)
CAN(h18)	EM(h19)	SUB(h1A)	ESC(h1B)	FS(h1C)	GS(h1D)
RS(h1E)	US(h1F)	Del(H7F)			

Example 1) [NUL] , [ENQ] , [1] , [A] : Possible
Example 2) NUL, ENQ , [12] , [ABC] : impossible

– It is allowed to be only 3 consecutive characters.

Example 1) [ENQ][STX][NUL] : Possible
Example 2) [A][NUL][ENQ][STX] : impossible

– It's possible to use BCC that can detect errors. BCC must be set as [BCC] to be used. To set BCC contents, click "BCC Setting" button on the right side.

Ex5)

- BCC setting: set BCC when it is needed.

Item		Contents
Data Type		ASCII adds 2 bytes BCC value in ASCII type to frame. Hex adds 1 byte BCC value in Hex type to frame. For the detailed setting BCC, refer to 8.1.6 “Execution of Commands”.
Check Rule	Default	It is that sum all the data from 2nd data to the data before the data marked as [BCC] and input the result to the [BCC] area
	SUM 1	BCC method uses sum like defaults, but the user can set the BCC area.
	SUM 2	BCC method is the same with SUM 1, but it’s used when the user masks any value to the last BCC value.
	XOR 1	BCC method is OR (Exclusive OR).
	XOR 2	BCC method is the same with XOR 1, but it’s used when the user masks any value to the last BCC value.
	MUL 1	BCC method is MULTIPLY that is, multiplication.
	MUL 2	BCC method is the same with MUL 1, but it’s used when the user masks any value to the last BCC value.
Range		H signifies header, S is for segment, and T is for tail. Ex1) When header is set as [ENQ][STX], tail is set as [EOT][ETX], and the range of setting BCC is to be from [STX] to [ETX], then set as **H [1]~T [1]**.
Complement		It is to set whether not to take complement number or to take the complement number of 1 or 2 at [BCC] value. If mask setting is done after taking a complement number, the user can set any value to do masking.
Mask		Sets any value and method of masking. Ex1) When masking by XOR method, using a value, HFF : ^FF Ex2) When masking by OR method, using a value, HFF : |FF When masking by AND method, using a value, HFF : &FF

※ Keys on Keyboard, for setting masking method →

- Frame size
  - ASCII communication : max. 128 bytes
  - Hex communication : max. 256 bytes

- Link relay (L)
  - It’s a flag to indicate whether a user defined frame is received in the order set by the user.
  - If the received frame is matched with the declared frame in frame list number 3, L003 starts blinking. (0 → 1 → 0)

- When frame receiving is done, MK80S base unit check if there’s any match between the received frame and the declared frame in frame list. If there is, let the Link relay L(n) flag blink and save the received data in the assigned area.

BCC calculation example

When frame is set as below, the result of calculation is as follow.

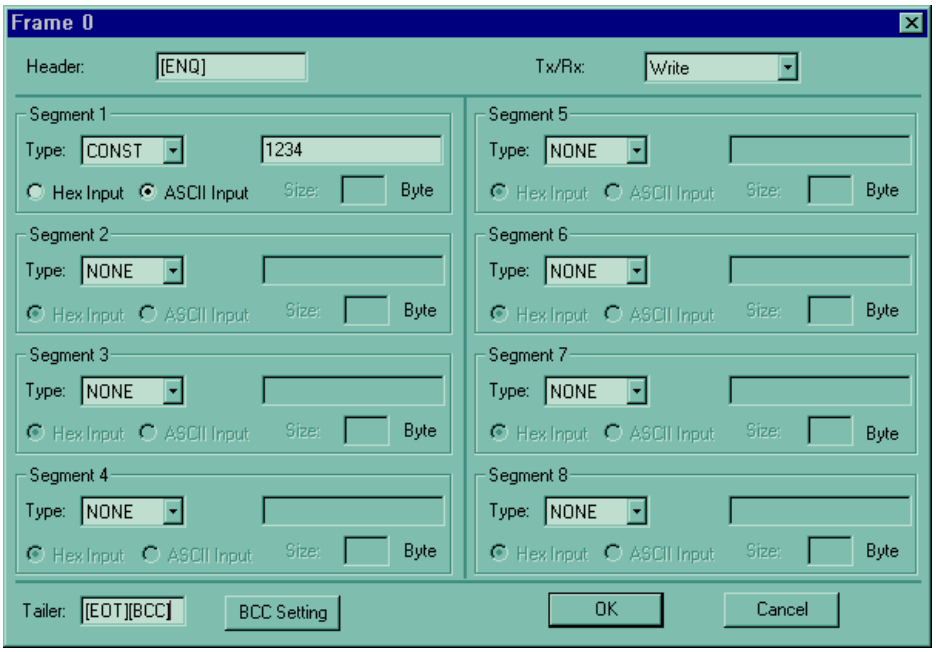

(1) Default setting

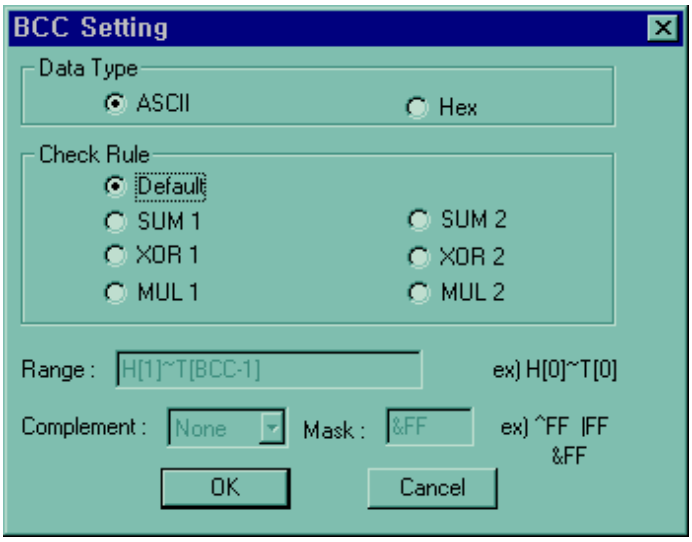

The kinds of segment input	The value of sum check	The last transmitting frame	
		BCC Type setting	
		ASCII Type	Hex Type
ASCII Input	31 + 32 +33 +34 +04 = CE	05 31 32 33 34 04 43 41	05 31 32 33 34 04 CE
Hex Input	12 + 34 +04 = 4A	05 12 34 04 34 41	05 12 34 04 4A

(2) SUM 1 , XOR 1 or MUL 1 setting.

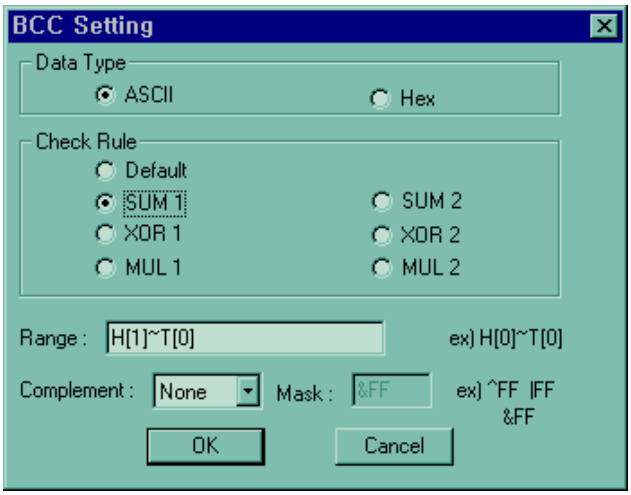

a) SUM 1

The kinds of segment input	The value of sum check	The last transmitting frame BCC Type setting	
		ASCII Type	Hex Type
ASCII Input	05 + 31 + 32 +33 +34 +04 = D3	05 31 32 33 34 04 44 33	05 31 32 33 34 04 D3
Hex Input	05 + 12 + 34 +04 = 4F	05 12 34 04 34 46	05 12 34 04 4F

b) XOR 1

The kinds of segment input	The value of sum check	The last transmitting frame BCC Type setting	
		ASCII Type	Hex Type
ASCII Input	05 ^ 31 ^ 32 ^ 33 ^ 34 ^ 04 = 05	05 31 32 33 34 04 30 35	05 31 32 33 34 04 05
Hex Input	05 ^ 12 ^ 34 ^ 04 = 27	05 12 34 04 32 37	05 12 34 04 27

c) MUL 1

The kinds of segment input	The value of sum check	The last transmitting frame BCC Type setting	
		ASCII Type	Hex Type
ASCII Input	05 x 31 x 32 x 33 x 34 x 04 = 60	05 31 32 33 34 04 36 30	05 31 32 33 34 04 60
Hex Input	05 x 12 x 34 x 04 = 20	05 12 34 04 32 30	05 12 34 04 20

d) Complement setting

Complement calculation as below

bit 7							bit 0	
1	1	0	1	0	0	1	1	= h D3(sum check value)

bit 7							bit 0	
0	0	1	0	1	1	0	0	1' complement = h 2C(the last sum check value)

bit 7							bit 0	
0	0	1	0	1	1	0	1	2' complement = 1' complement + 1 = h 2D(the last sum check

e) Mask setting

Masking method is as below

bit 7							bit 0	
1	1	0	1	0	0	1	1	= h D3 (sum check value)

bit 7							bit 0	
1	1	1	1	1	1	1	1	= hFF (masking value)

bit 7							bit 0	
1	1	0	1	0	0	1	1	AND masking = hD3

bit 7							bit 0	
1	1	0	1	0	0	1	1	OR masking = hFF

bit 7							bit 0	
0	0	1	0	1	1	0	0	Exclusive OR masking = h2C

8.2.3 Instruction

Instruction		Available device											No. of steps	Flag		
		M	P	K	L	F	T	C	S	D	#D	integer		Error (F110)	Zero (F111)	Carry (F112)
SND8	S1											O	5	O		
	S2	O	O	O	O					O	O					

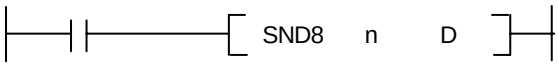

Error (F110)	Error flag turns on , when designating area is over.

영역설정

n	Frame no. which is designated at parameter
D	Device which the communication status is stored

ν SND8

1) Function

When the execution condition is on, the communication starts with protocol at parameter which is designated early.
'n' is a frame number at parameter which is designated
'D' is a device which the communication status is stored.

2) example of program

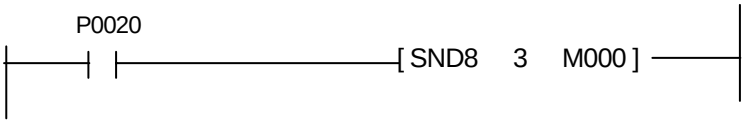

When input condition is on, the communication starts with protocol at user defined parameter rnumber 3.
The communication state stores M000 and the format of M000 lis as below

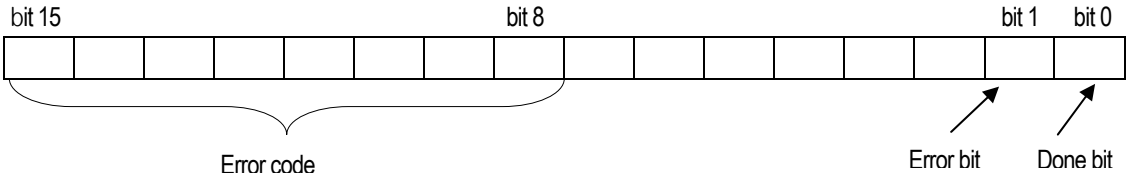

- Done bit : transfer complets normally, this bit turns on during 1 scan.
- Error bit : When communication error occurs,
- Error code : When error bit turns on it stores error code.

3) Error code

Code	Error type	explanation
06	Slave Device Busy	It's sending or waiting to receive
09	Parameter Error	Communication parameter setting error, Link enable setting error
10	Frame Type Error	Frame does not setting or frame does not 'sending'

8.2.4 Example of Use 1

This example is supposed that there's a communication between MK80S's by the user-defined protocol. The system configuration is as follows and the cable is the same with the one of 1:1 dedicated protocol communication.

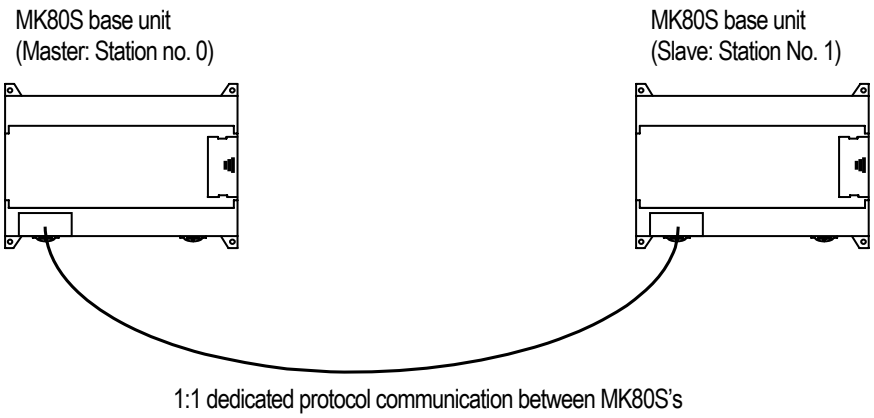

The data in M area of the master station is sent to the slave station and the slave station saves the received data in M area outputs as direct variable, and sends the data back to the master. This process repeats between the master and the slave.

1) The Programming and setting communication parameter of the master station

(1) Select the communication parameter and then select communication method and communication channel. And then select 'user Defined' at protocol and mode item('list item is activated)

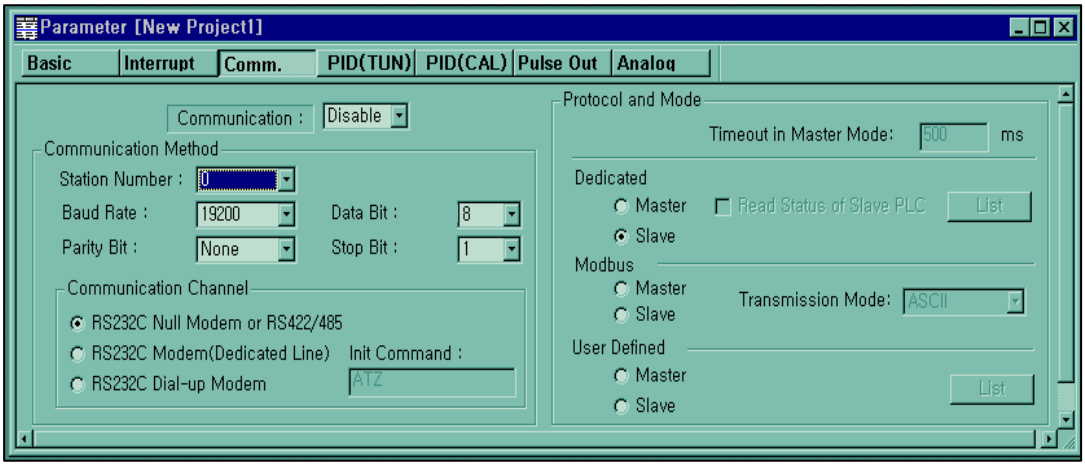

Click the 'list'

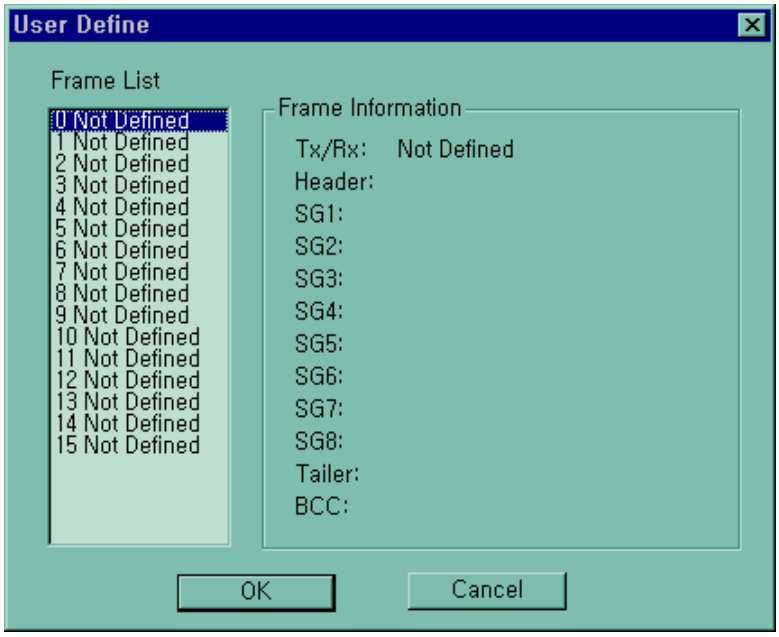

Double click the number '0'

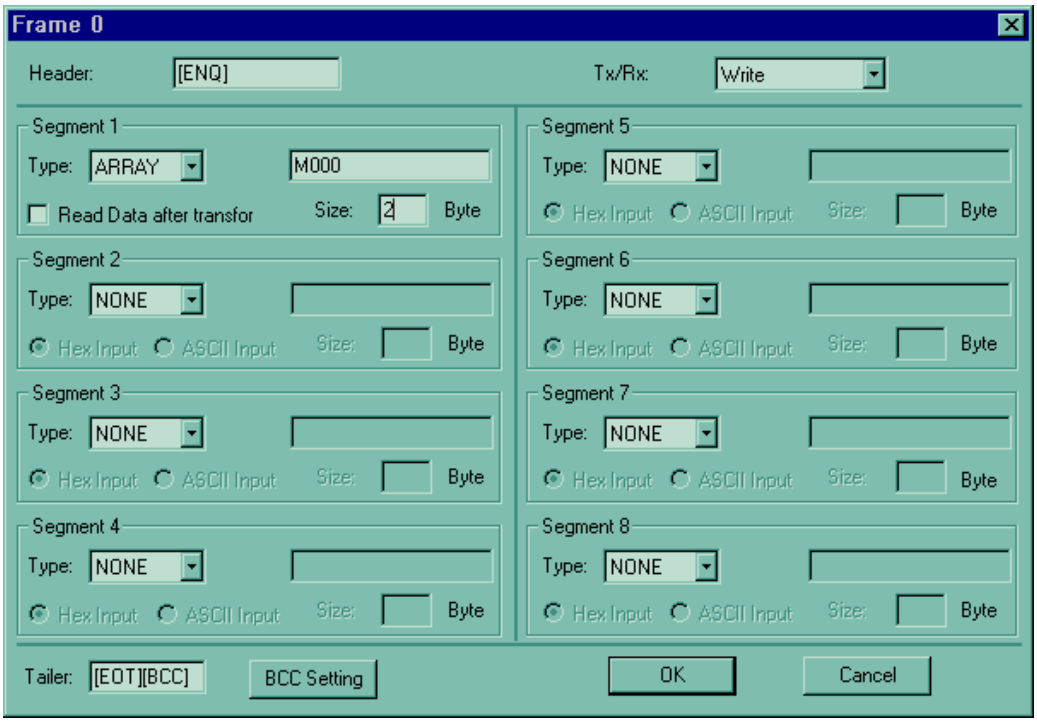

Designate the header, segment, send/receive , tail as above and then click the BCC Setting

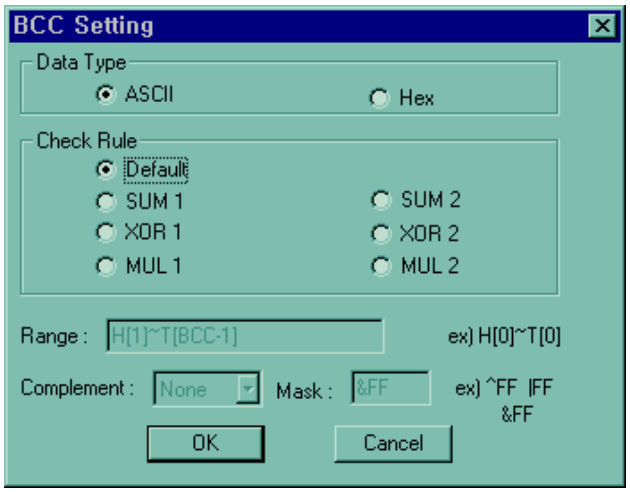

Designate BCC Setting as above.
Click the OK button, and then you can see the frame list window which is designated

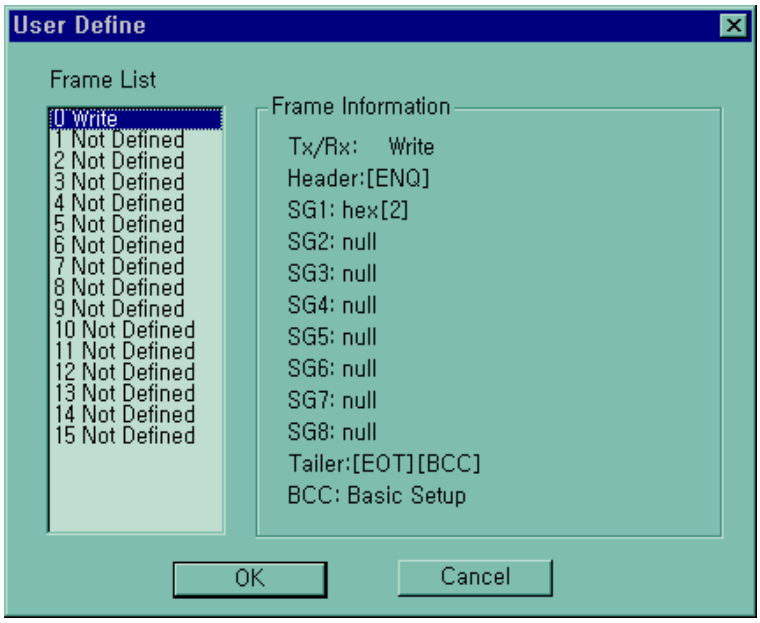

Double click the number 1 frame

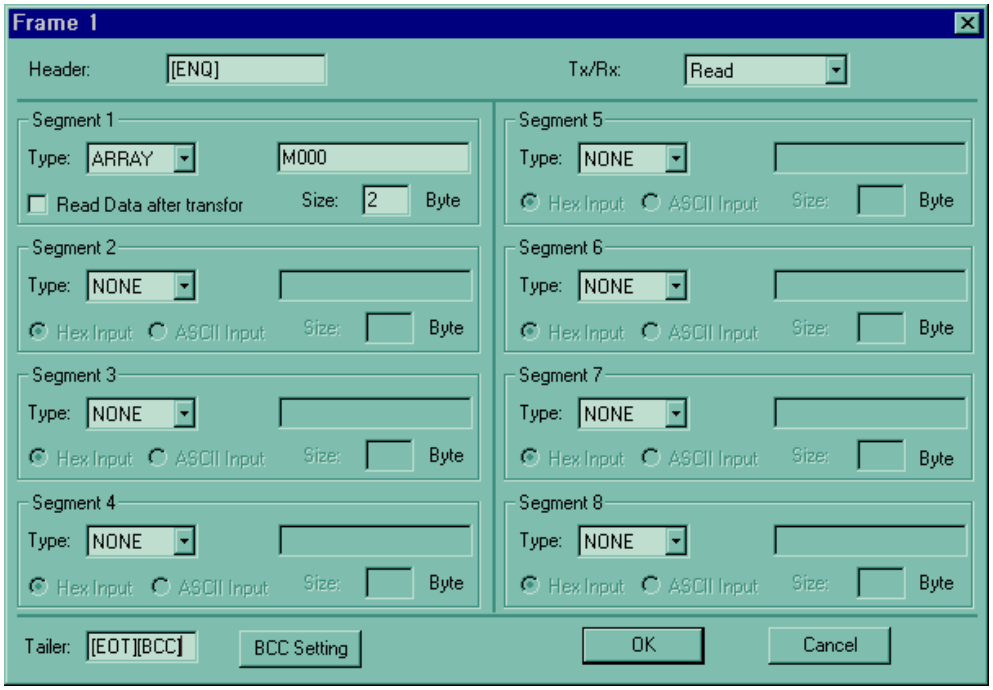

BCC Setting method is same frame 0.
After the frame setting and BCC setting completes, click the OK button.
You can see the frame list window which is designated as below.

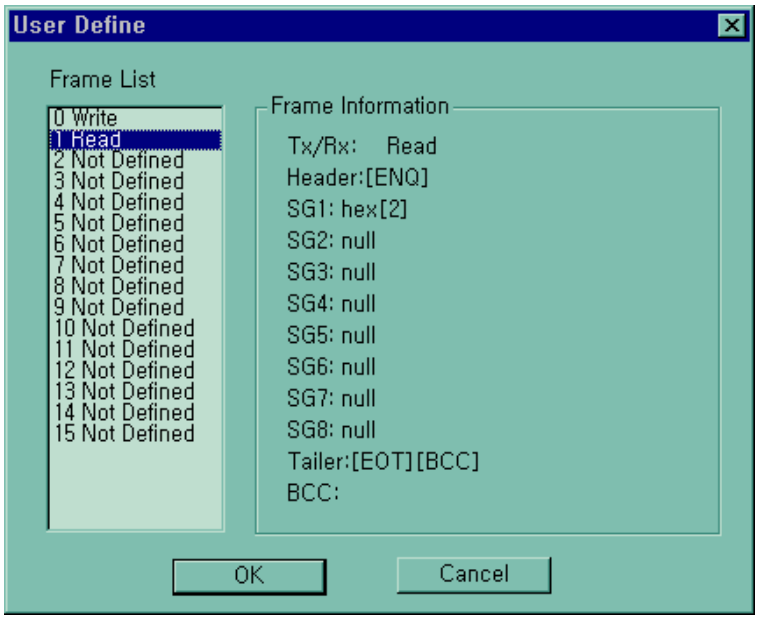

Program

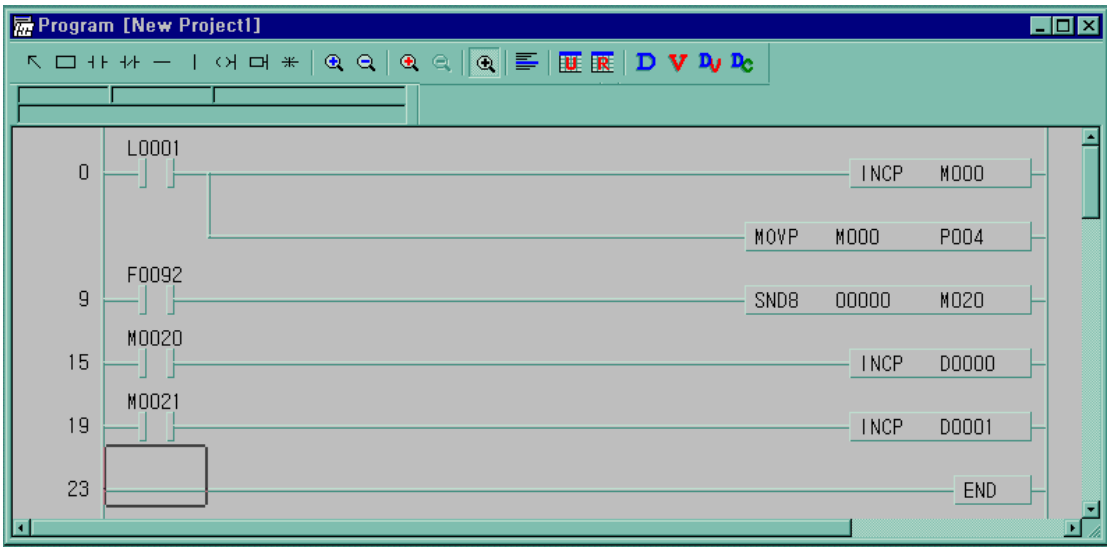

When the data is received at frame no. 1 , link relay L001 turns on during 1 scan. At that moment M000 increases . and the value of M000 moves output relay P004.
The new value of M000 is sending again every 1 second period (F092 is 1second period flag)
The number of sending normally stores D000.
When error occurs, the number of sending error stores D001.

When data is received , MK80S search the same protocol at frame list automatically.
Therefore MK80S has not receive instruction
(If the same protocol exist, MK80S receive the data at the upper frame number.)

2) Setting and program of slave station

Make the new project file and setting new parameter.

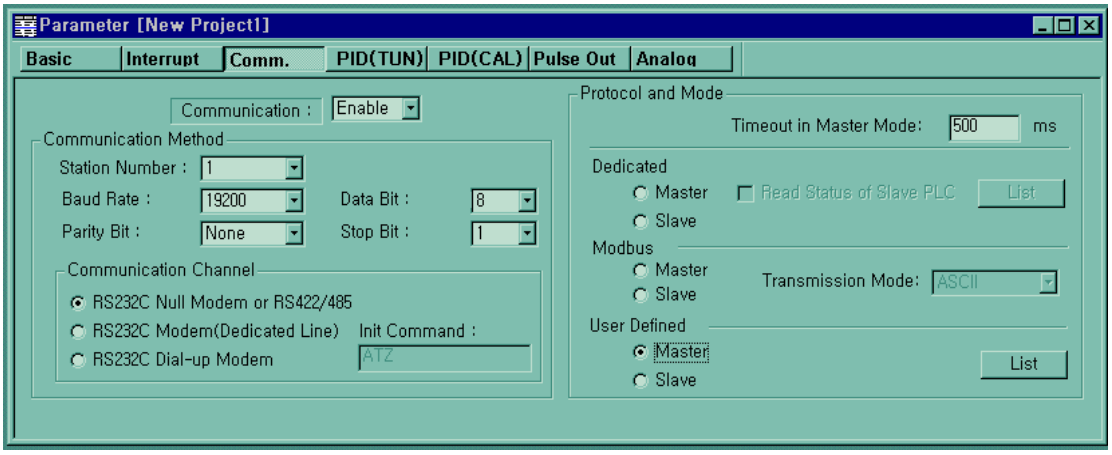

Click the list after set the communication method and communication channel.

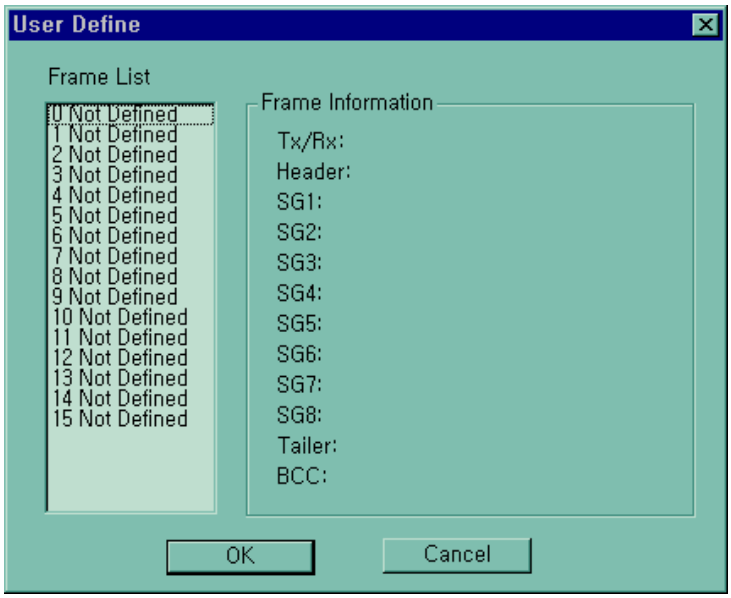

Double click the frame list number '0'

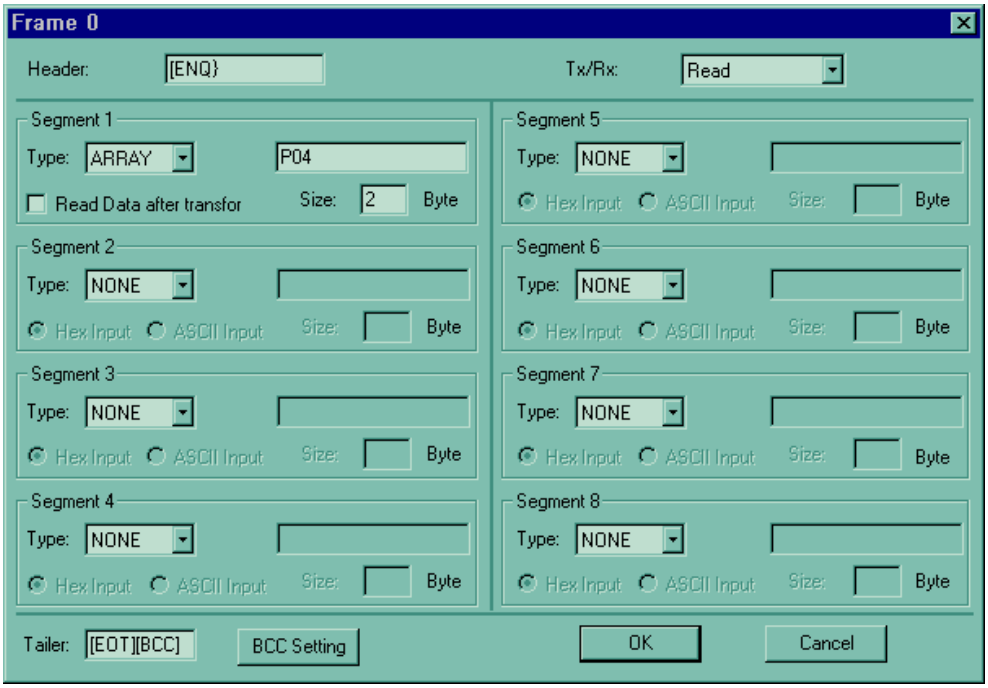

Click the BCC Setting after set the header , segment , tail as above.

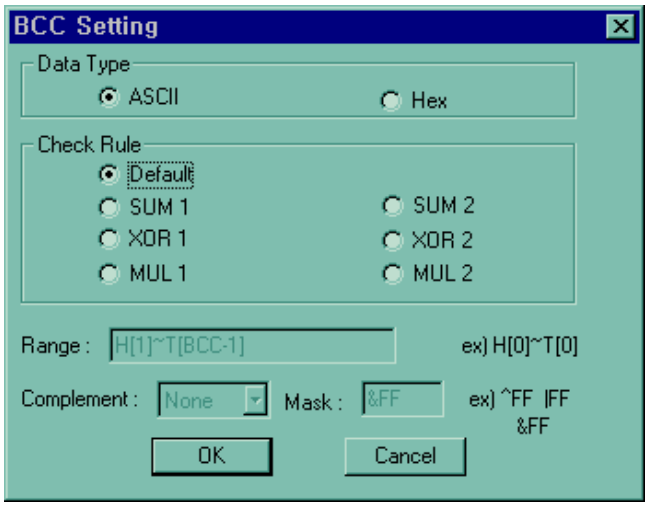

Click the OK button after BCC setting as above.

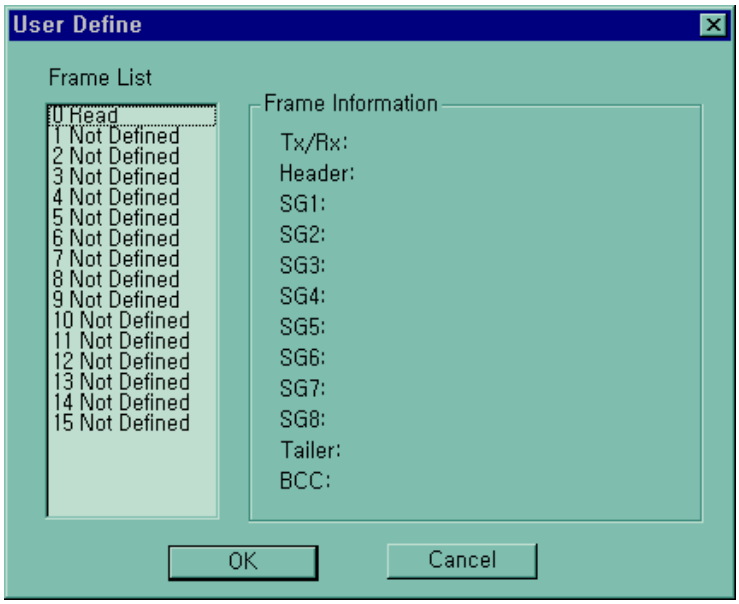

You can see the frame list which is designated. And then set the frame number '1' as below

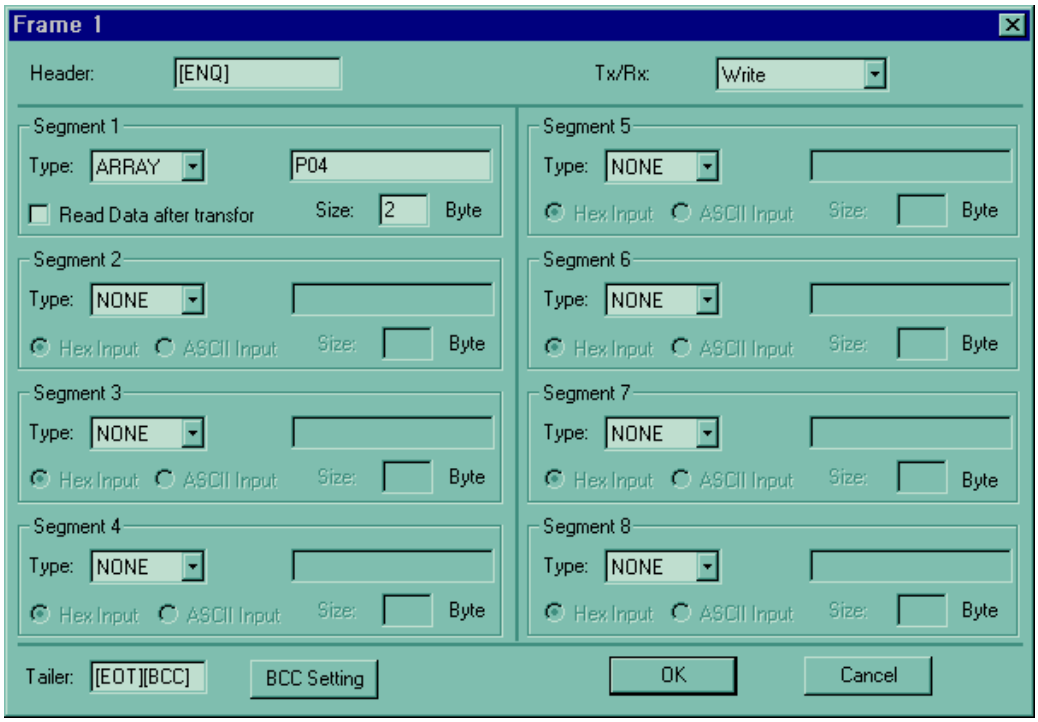

Double click the BCC Setting . and then set the BCC as below

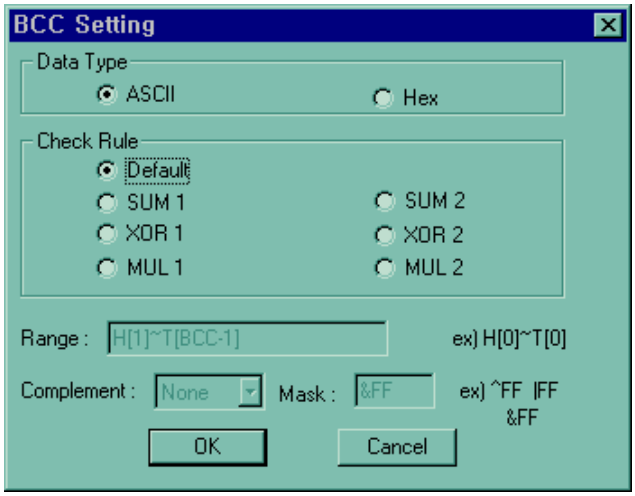

You can see the frame list which is designated.

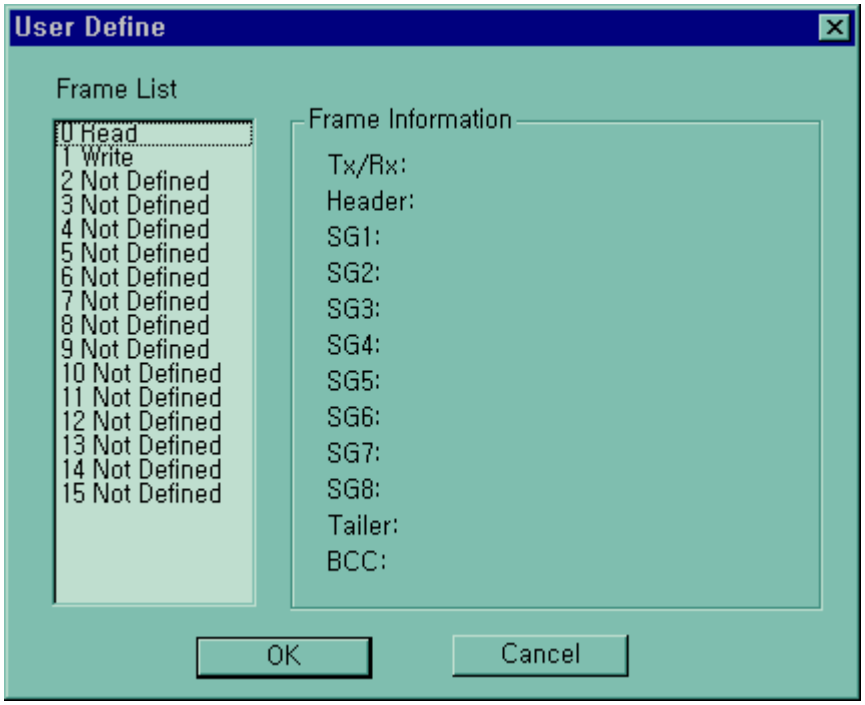

Click OK button

Program

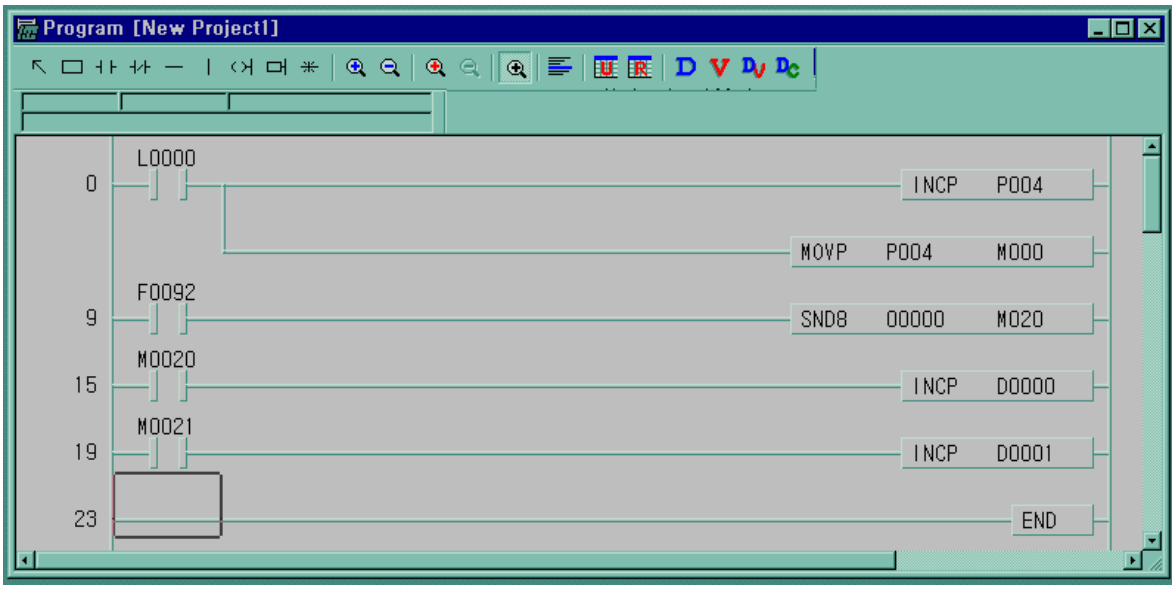

When the data is received at frame no. 0 , link relay L000 turns on during 1 scan. At that moment P004 increases . and the value of P004 moves M000.
The new value of P004 is sending again every 1 second period (F092 is 1second period flag)
The number of sending normally stores D000.
When error occurs the number of sending error stores D001.

8.3 Modbus Protocol Communication

8.3.1 Introduction

MK80S built-in communication supports Modbus, the Modicon product's communication protocol. It supports ASCII mode, using ASCII data and RTU mode using Hex data. Function code used in Modbus is supported by instruction and especially function code 01, 02, 03, 04, 05, 06, 15, and 16. Refer to "Modicon Modbus Protocol Reference Guide"(http://www.modicon.com/techpubs/toc7.html).

8.3.2 Basic Specification

1) ASCII mode
   (1) It communicates, using ASCII data.
   (2) Each frame uses ': (colon : H3A)', for header, CRLF (Carriage Return-Line Feed : H0D H0A), for tail.
   (3) It allows Max. 1 second interval between characters.
   (4) It checks errors, using LRC.
   (5) Frame structure (ASCII data)

Item	Header	Address	Function code	Data	LRC	Tail (CR LF)
Size	1 byte	2 bytes	2 bytes	n bytes	2 bytes	2 bytes

2) RTU mode
   (1) It communicates, using hex data.
   (2) There's no header and tail. It starts with address and finishes frame with CRC.
   (3) It has at least 3.5 character times between two frames.
   (4) It ignores the current frame when 1.5 character times elapse between characters.
   (5) It checks errors, using 16 bit CRC.
   (6) Frame structure (hex data).

Item	Address	Function code	Data	CRC
Size	1 byte	1 bytes	n bytes	2 bytes

REMARK

1) The size constituting 1 letter is 1 character. So 1 character is 8 bits that is 1 byte.
2) 1 character time means the time lapsed for sending 1 character.
   Ex) Calculation of 1 character time at 1200 bps.
   1200 bps means that it takes 1 sec to send 1200 bits. To send 1 bit, 1 sec/1200 bits = 0.83 ms. Therefore 1 character time is 0.83ms * 8 bits = 6.64ms.
3) 584, 984 A/B/X executes frame division, using intervals of more than 1 sec without LRC in processing internally.

3) Address area
   (1) Setting range is available from 1 to 247, but MK80S supports from 0 to 31.
   (2) Address 0 is used for broadcast address. Broadcast address is all slave device recognize and respond to like the self-address, which can't be supported by MK80S.

4) Function code area
   (1) MK80S supports only 01, 02, 03, 04, 05, 06, 15, and 16 among Modicon products' function codes.
   (2) If the response format is confirm+(ACK), it uses the same function code.
   (3) If the response format is confirm-(NCK), it returns as it sets the 8th bit of function code as 1.

   Ex) If function code is 03, (we write here only function code part. Because only function codes are different.)

[Request]	0000 0011 (H03)
[Confirm+]	0000 0011 (H03)
[Confirm-]	1000 0011 (H83)

It returns as it sets the 8th bit of function code of request frame.

5) Data area
   (1) It sends data, using ASCII data(ASCII mode) or hex (RTU mode).
   (2) Data is changed according to each function code.
   (3) Response frame uses data area as response data or error code.

6) LRC Check/CRC Check area
   (1) LRC (Longitudinal Redundancy Check) : It works in ASCII mode. It takes 2' complement from sum of frame except header or tail to change into ASCII code,
   (2) CRC (Cyclical Redundancy Check): It works in RTU mode. It uses 2-byte CRC check rules.

REMARK

1) All numerical data can use hexadecimal, decimal, and binary type. If we convert decimal 7 and 10 into each type:
   Hexadecimal : H07, H0A or 16#07, 16#0A
   Decimal : 7, 10
   Binary : 2#0111, 2#1010

7) Function code types and memory mapping

Code	Function code name	Modicon PLC Data address	Remark
01	Read Coil Status	0XXXX(bit-output)	Read bits
02	Read Input Status	1XXXX(bit-input)	Read bits
03	Read Holding Registers	4XXXX(word-output)	Read words
04	Read Input Registers	3XXXX(word-input)	Read words
05	Force Single Coil	0XXXX(bit-output)	Write bit
06	Preset Single Register	4XXXX(word-output)	Write word
15	Force Multiple Coils	0XXXX(bit-output)	Write bits
16	Preset Multiple Registers	4XXXX(word-output)	Write words

MASTER-K Mapping

Bit area		Word area	
Address	Data area	Address	Data area
h0000	P area	h0000	P area
h1000	M area	h1000	M area
h2000	L area	h2000	L area
h3000	K area	h3000	K area
h4000	F area	h4000	F area
h5000	T area	h5000	T area(current value area)
h6000	C area	h6000	C area(current value area)
		h7000	S area
		h8000	D area

8) Modbus addressing rules

MK80S base unit starts its address from 0 and matches with 1 of Modicon products' data address. So MK80S's address, n matches n+1 of Modicon products' address. This means that the output contact point 1 (0001) of Modicon products is marked as communication address 0 and the input contact point 1 (0001) of Modicon products is marked as communication address 0 in MK80S.

9) The size of using data

As for data size, MK80S base unit supports 128 bytes in ASCII mode and 256 bytes in RTU mode. The maximum size of the Modicon products is different from each other kind. So refer to "Modicon Modbus Protocol Reference Guide."

10) Map of wiring

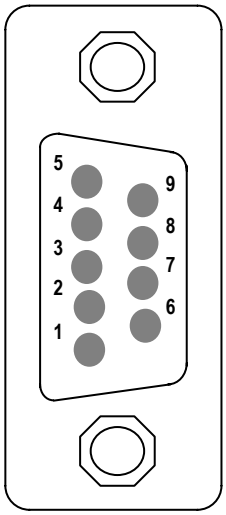

Male Type

MK80S base unit	Connecting no. and direction	Quantum (9PIN)	
Pin no.		Pin no.	Signal
1		1	CD
2		2	RXD
3		3	TXD
4		4	DTR
5		5	SG
6		6	DSR
7		7	RTS
8		8	CTS
9		9	

8.3.3 Parameters Setting

1) Setting communication parameter

(1) Open a new project file at KGLWIN.
- MK80S should be selected in PLC types.
- Open a new project file for each of the master and the slave.

(2) Select a communication parameter at KGLWIN and double click to open the following window.

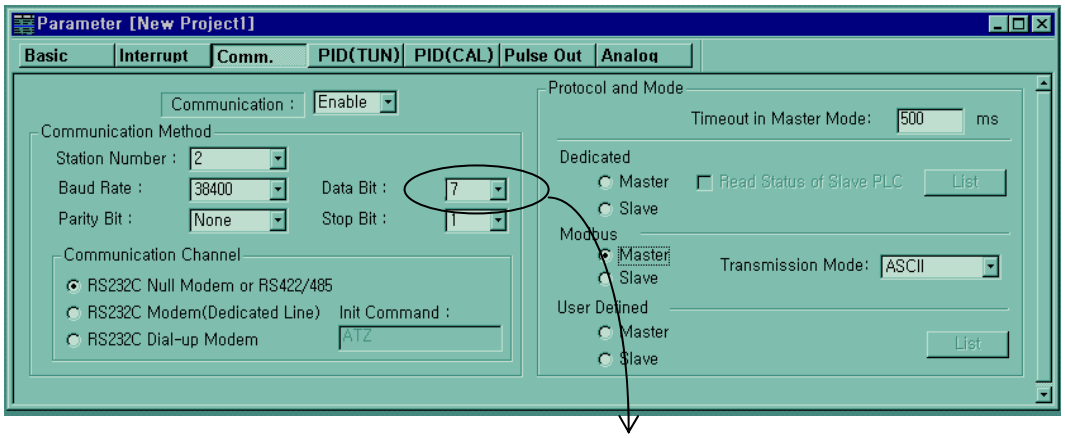

If communication mode is ASCII,
Be sure to set 7bit

(3) Set the contents as follows.

Item	Setting contents
Station No.	Set a number between 0 to 31 (Don't assign no. 0 as broadcasting station lest it may be a cause for mistaken operation)
Baud Rate	Set one from 1200, 2400, 4800, 9600, 19200, 38400, or 57600 bps.
Data Bit	Set 7 or 8. ASCII mode: Set as 7 bits. RTU mode: Set as 8 bits.
Parity Bit	Set as one of None, Even, or Odd.
Stop Bit	Set 1 or 2 bit(s). When parity bit is set: Set as 1 bit. When parity bit isn't set: Set as 2 bits.
Communication Channel	● RS232C Null Modem or RS422/485 : It's a communication channel for the communication, using MK80S base unit's built-in communication and Cnet I/F module (G7L-CUEC). ● RS232C Modem (Dedicated Line) : It's to be selected for the communication, using an dedicated modem with Cnet I/F module (G7L-CUEB). ● RS232C Dial Up Modem : It's to be selected for the general communication connecting through the telephone line by dial up modem and Cnet I/F module (G7L-CUEB). Footnote) Using Cnet I/F module (G7L-CUEB) supporting RS232C, RS232C dedicated or dial-up modem communication can be done, but not through Cnet I/F module (G7L-CUEC) supporting RS422/485.
Time out in Master Mode	● It's the time waiting a responding frame since the master MK80S base unit sends a request frame. ● The default value is 500ms. ● It must be set in consideration of the max. periodical time for sending/receiving of the master PLC. ● If it's set smaller than the max. send/receive periodical time, it may cause communication error.
Modbus Master/ Slave	If it is set as the master, it's the subject in the communication system. If it's set as the slave, it only responds to the request frame of the master.
Transmission Mode	Select ASCII mode or RTU mode.

8.3.4 Instruction and example

1) MODBUS

Instruction		Available Device											Step no.	Flag		
		M	P	K	L	F	T	C	S	D	#D	integer		Error (F110)	Zero (F111)	Carry (F112)
MODBUS	S1	O	O	O	O	O	O	O		O	O		7	O		
	S2	O	O	O	O		O	O		O	O					
	S3	O	O	O	O		O	O		O	O					

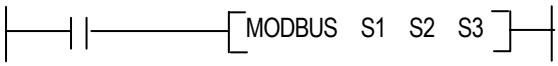

S1	Device address which is registered communication parameter
S2	Device address which is stored communication data
S3	Device address which is displayed communication status

Example program

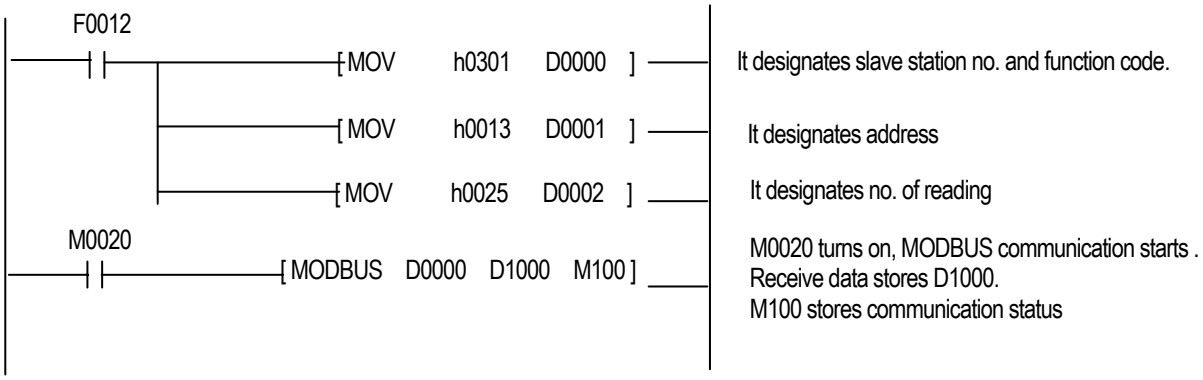

S3 format is as below.

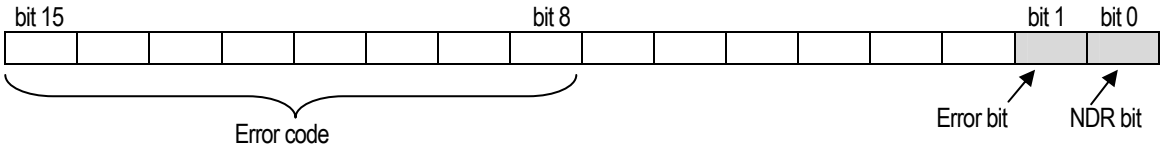

NDR : when the communication ends normally, this bit turns on during 1 scan.
Error bit : when communication error occurs, this bit turns on during 1 scan. At that time error code stores bit 8 ~ bit 15.

Error code is as follow

Code	Error type	Meaning
01	Illegal Function	Error in inputting function code in instruction.
02	Illegal Address	Error of exceeding the area limit of reading/writing on the slave station.
03	Illegal Data Value	Error when the data value to be read from or write on the slave station isn't allowed.
04	Slave Device Failure	Error status of the slave station.
05	Acknowledge	It's a responding code of the slave station for the master station to prevent the master station time-out error, when request command processing takes time. The master station marks an error code and waits for a certain time without making any second request.
06	Slave Device Busy	Error when request command processing takes too much time. The master should request again.
07	Time Out	Error when exceeds the time limit of the communication parameter as it communicates.
08	Number Error	Errors when data is 0 or more than 256 bytes
09	Parameter Error	Error of setting parameters (mode, master/ slave)
10	Station Error	Error when the station number of itself and the station number set by the S1 of instruction are the same.

Example program 1

It's supposed that MK80S base unit is the master and it reads Coil Status of the station no. 17, a Modicon product.

The master reads status of the Coil 00020 ~ 00056 of the slave station no. 17. The Coil of the slave station is supposed to be as follows and the data that are read is saved in D1000

Coil	59	58	57	56	55	54	53	52	51	50	49	48	47	46	45	44	43	42	41	40
Status	X	X	X	1	1	0	1	1	0	0	0	0	1	1	1	0	1	0	1	1
Hex	1				B				0				E				B			
Coil	39	38	37	36	35	34	33	32	31	30	29	28	27	26	25	24	23	22	21	20
Status	0	0	1	0	0	1	1	0	1	0	1	1	1	1	0	0	1	1	0	1
Hex	2				6				B				C				D			

<Data status of the Modicon product's Coil 00020-00059>

The status of Coil 57, 58, 59 are redundancy.
Data is sent starting from the low bit by byte unit. If the deficient bit of a byte is filled with 0. An example of sending the above data is as follows.

Example 1) CD B2 0E 1B

Program

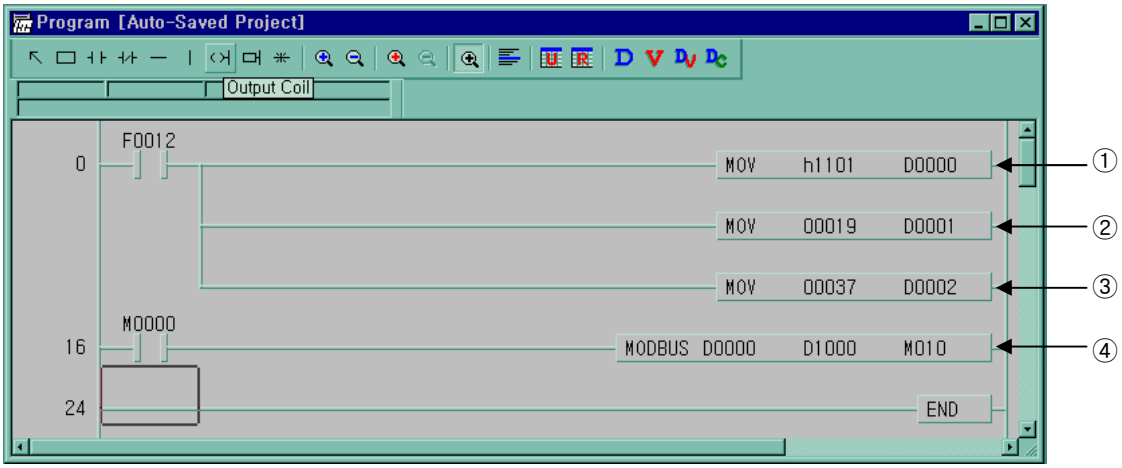

① : It designates slave station and function code
No. of station : h11(17) , function code : h01

② : Address setting
Address '0' at MODBUS protocol means address '1' actually .So if you want to designate address '20' , write address '19'

③ : Reading number setting
Reading number is 37 from 20 to 56.

④ : This is MODBUS Communication instruction.
Data is sent starting from the low bit by byte unit. If the deficient bit of a byte is filled with 0. An example of sending the above data is as follows.
The data transmission starts lower byte. The remnant part of byte is filled with '0'

Example 1) CD B2 0E 1B

Stored data at D1000,D1001,D1002

Device	Stored data
D1000	h CD 6B
D1001	h B2 CE
D1002	h 00 1B

Example program 2

It's supposed that MK80S base unit is the master and it reads Coil Status of the station no. 17, a Modicon product.

The master reads status of the input contact 10197 ~ 10218 of the slave station no. 17.
The input contact of the slave station is supposed to be as follows and the data that are read is saved in M015.

Input	10220	10219	10218	10217	10216	10215	10214	10213	10212	10211	10210	10209
Status	X	X	1	1	0	1	0	1	1	1	0	1
Hex	3				5				D			
Input	10208	10207	10206	10205	10204	10203	10202	10201	10200	10199	10198	10197
Status	1	0	1	1	1	0	1	0	1	1	0	0
Hex	B				A				C			

The status of input contact 10219,10220 are redundancy.
Data is sent starting from the low bit by byte unit. If the deficient bit of a byte is filled with 0. An example of sending the above data is as follows.

Example 1) AC DB 35

Program

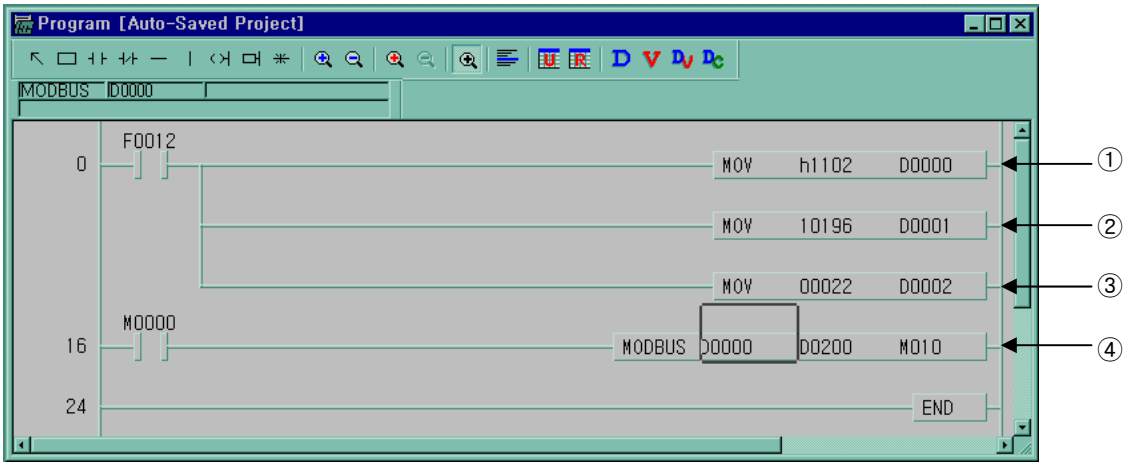

① : It designates slave station and function code
No. of station : h11(17) , function code : h02

② : Address setting
Address '0' at MODBUS protocol means address '1' actually .So if you want to designate address '10197' , write address '10196'

③ : Reading number setting
Reading number is 22 from 10197 to 10220.

④ : This is MODBUS Communication instruction.
The data transmission starts lower byte. The remnant part of byte is filled with '0'

Example 2) AC DB 35

Stored data at D200,D201

Device	Stored data
D200	h AC DB
D201	h 00 35

Chapter 9. Installation and wiring

9.1 Installation

9.1.1 Installation Environment

This unit has high reliability regardless of its installation environment, but be sure to check the following for system reliability.

1) Environment requirements
   Avoid installing this unit in locations which are subjected or exposed to:
   (1) Water leakage and dust.
   (2) Continuous shocks or vibrations.
   (3) Direct sunlight.
   (4) Dew condensation due to rapid temperature change.
   (5) Higher or lower temperatures outside the range of 0 to 55℃
   (6) Relative humidity outside the range of 5 to 95℃
   (7) Corrosive or flammable gases

2) Precautions during installing
   (1) During drilling or wiring, do not allow any wire scraps to enter into the PLC.
   (2) Install it on locations that are convenient for operation.
   (3) Make sure that it is not located on the same panel that high voltage equipment located.
   (4) Make sure that the distance from the walls of duct and external equipment be 50mm or more.
   (5) Be sure to be grounded to locations that have good ambient noise immunity.

3) Heat protection design of control box
   (1) When installing the PLC in a closed control box, be sure too design heat protection of control box with consideration of the heat generated by the PLC itself and other devices.
   (2) It is recommended that filters or closed heat exchangers be used.

The following shows the procedure for calculating the PLC system power consumption.

1) PLC system power consumption block diagram

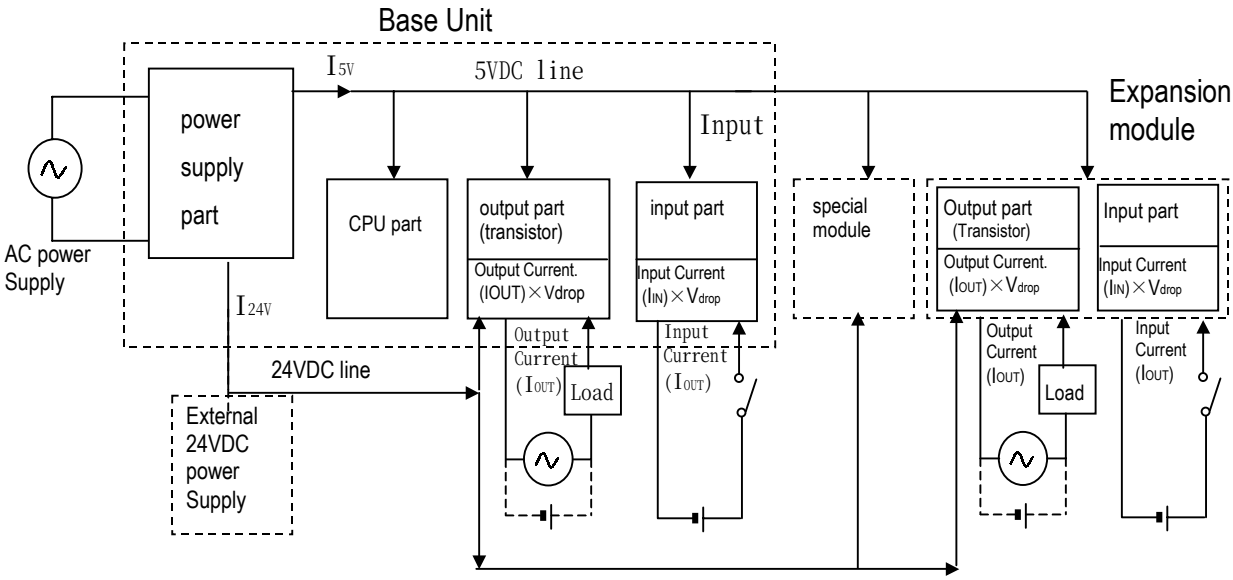

2) Power consumption of each part

(1)Power consumption of a power supply part

Approximately 70% of the power supply module current is converted into power 35% of that 65% dissipated as heat, i.e., 3.5/6.5 of the output power is actually used.

- $W_{pw} = 3.5 / 6.5 \{(I_{5V} \times 5) + (I_{24V} \times 24)\}$ (W)

where, I5v: 5VDC circuit current consumption of each part

I24v: 24VDC circuit average current consumption of output part (with points simultaneously switched ON). Not for 24VDC power supplied from external or power supply part that has no 24VDC output.

(2) Total 5VDC power consumption

The total power consumption of all modules is the power of the 5VDC output circuit of the power supply part.

- $W_{5V} = I_{5V} \times 5$ (W)

(3) Average DC24V power consumption (with points simultaneously switched ON)

The total power consumption of all modules is the average power of the DC24V output circuit of the power supply part.

- $W_{24V} = I_{24V} \times 24$ (W)

(4) Average power consumption by voltage drop of output part (with points simultaneously switched ON)

- $W_{out} = I_{out} \times V_{drop} \times$ output points $\times$ the rate of points switched on simultaneously (W)

I_{out} : output current (actual operating current) (A)
V_{drop} : voltage dropped across each output load (V)

(5) Average power consumption of input parts (with points simultaneously ON)

- $W_{in} = I_{in} \times E \times$ input points $\times$ the rate of points switched on simultaneously (W)

  I_{in} : input current (effective value for AC) (A)
  E : input voltage (actual operating voltage) (V)

(6) Power consumption of the special module

- $W_S = I_{5V} \times 5 + I_{24V} \times 24$ (W)

The sum of the above values is the power consumption of the entire PLC system.

- $W = W_{PW} + W_{5V} + W_{24V} + W_{out} + W_{in} + W_s$ (W)

Check the temperature rise within the control panel with calculation of that total power consumption(W). The temperature rise in the control panel is expressed as:

$T = W / UA$ [°C]

W : Power consumption of the entire PLC system(obtained as shown above)
A : Control panel inside surface area [m^2]
U : if the control panel temperature is controlled by a fan, etc 6
if control panel air is not circulated 4

9.1.2 Handling Instructions

- Do not drop it off, and make sure that strong shock should not be applied.
- Do not unload the PCB from its case. It can cause faults.
- During wiring, be sure to check any foreign matter like wire scraps should not enter into the upper side of the PLC. If any foreign matter has entered into it always eliminate it.

1) Base unit or Expansion Module handling instructions

The followings explains instructions for handling or installing the Base unit or Expansion Module.

(1) I/O specifications re-check
Re-check the input voltage for the input part. if a voltage over the maximum switching capacity is applied, it can cause faults, destruction or fire.

(2) Used wire
Select the wire with due consideration of ambient temperature and rated current.
Its minimum specifications should be AWG24(0.18 ㎟) or more.

(3) Environment
When wiring the I/O part, if it locates near a device generating an cause short circuit, destruction or malfunction.

(4) Polarity
Before applying the power to part that has polarities, be sure to check its polarities.

(5) Wiring
- Wiring I/O wires with high voltage cable or power supply line can cause malfunction or disorder.
- Be sure that any wire does not pass across during input LED(I/O status will not be clearly identified).
- If an inductive load has been connected to output part, connect parallel surge killer or diode to a load Connect the cathode part of the + part of the power supply.

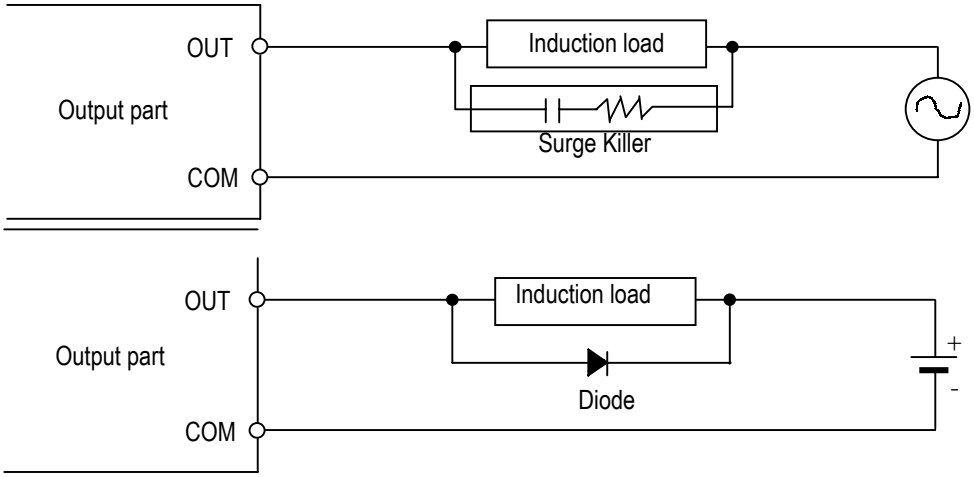

(6) Terminal block
Check its fixing. During drilling or wiring, do not allow any wire scraps to enter the PLC.
It can cause malfunction and fault.

(7) Be cautious that strong shock does not applied to the I/O part.
Do not separate the PCB from its case.

2) Mounting instructions

The following explains instructions for mounting the PLC onto the control panel.

(1) Allow sufficient distance from upper part of the Unit for easy module replacement and ventilation. Especially the distance between the left side of the basic unit and the control panel should be 100 ㎜ or more for periodic battery replacement.

(2) Make sure that MK80S is installed in fig 9.1 for most effective heat radiation.

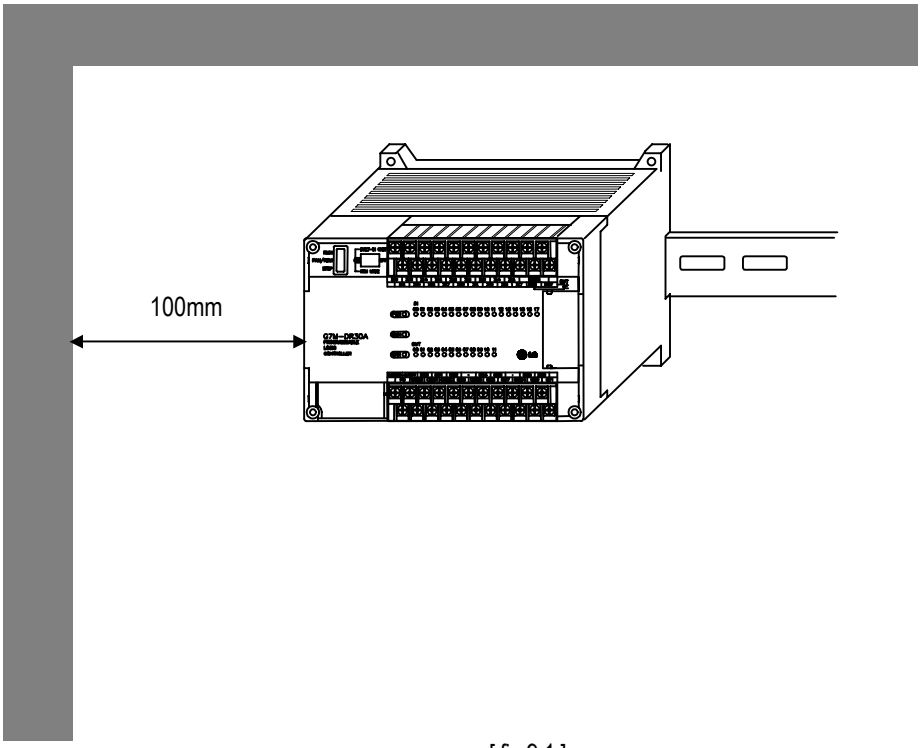

[fig 9.1]

(3) Do not mount the base board together with a large-sized electromagnetic contact or no-fuse breaker, which produces vibration, on the same panel. Mount them on different panels, or keep the unit or module away from such a vibration source

(4) Mount the wire duct as it is needed.
If the clearances are less than those in Fig 9.1, follow the instructions shown below

- If the wire duct is mounted on the upper part of the PLC, make the wiring duct clearance 50 ㎜ or less for good ventilation. Also, allow the distance enough to press the hook in the upper part from the upper part of the PLC.
- If the wire duct is mounted on the lower part of the PLC, make optic or coaxial cables contact it and consider the minimum diameter of the cable.

(5) To protect the PLC from radiating noise or heat, allow 100 ㎜ or more clearances between it and parts. Left or right clearance and clearance from other device in the left or right side should be 100 ㎜ or more.

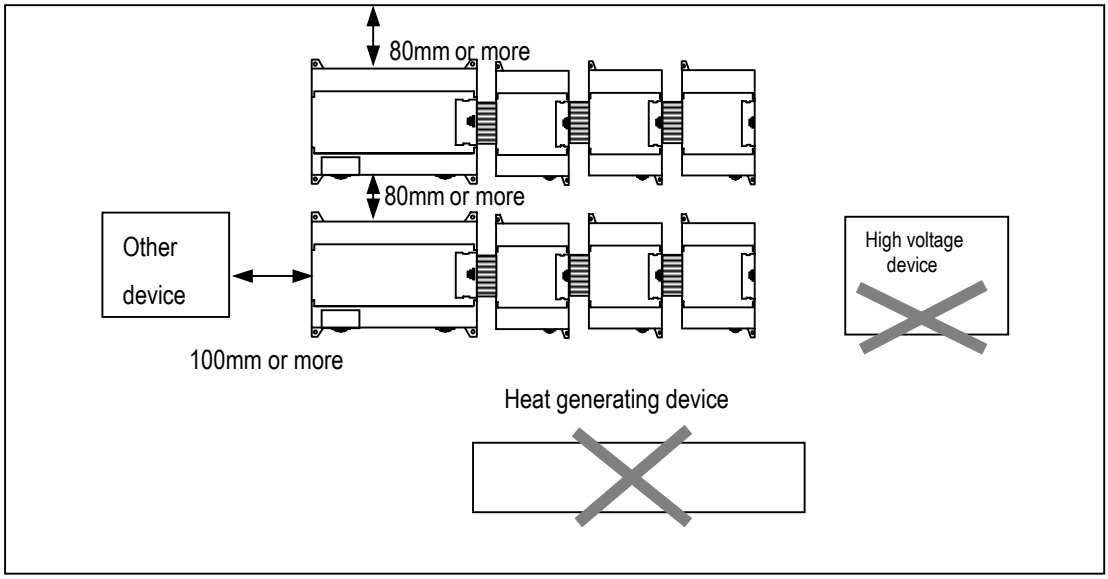

[Fig 9.2] PLC mounting

(6) MK80S has hooks for DIN rail in the base unit and expansion modules.

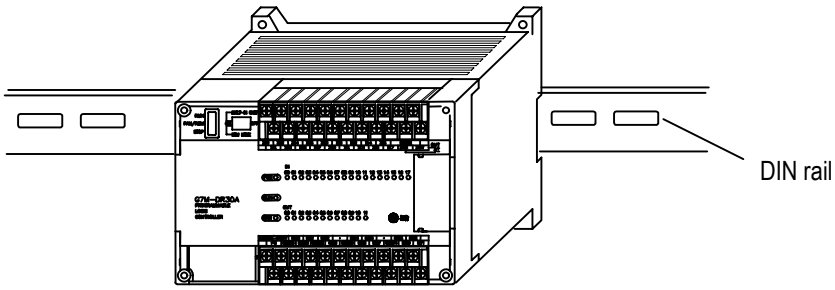

[Fig 10.3]

9.1.3 Connection of expansion module

The following explains the Connection of expansion modules to the base unit.

(1) Open the connector cover of the base unit.
(2) Insert the connector of the expansion module to the connector of the base unit.

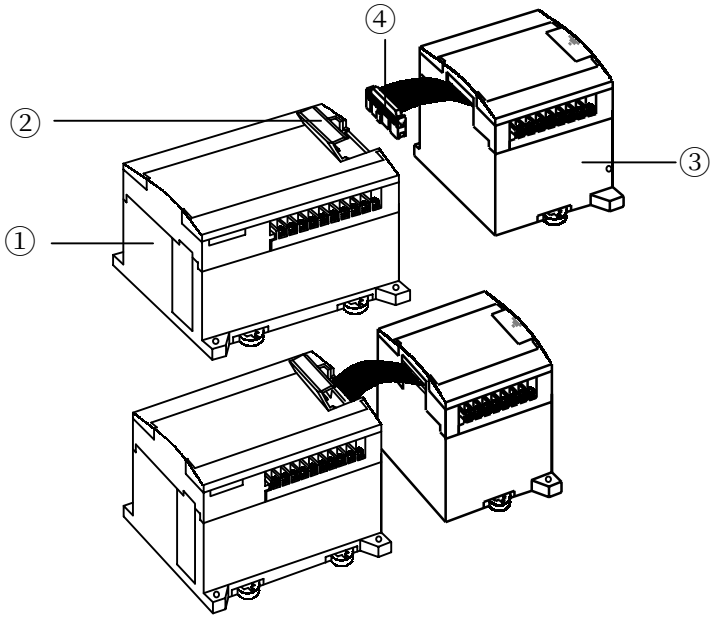

①: Base unit

②: Connector cover

③: expansion module

④: expansion cable

(3) Close the connector cover of the base unit.

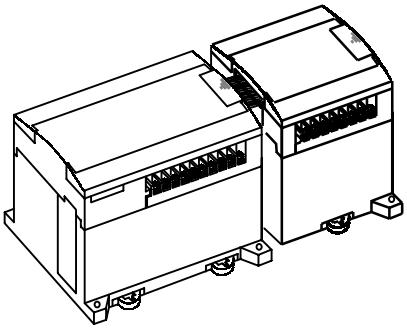

9.2 Wiring

The followings explains the wiring instructions for use of the system.

9.2.1 Power Supply Wiring

1)Use AC 100 240V (50Hz 60Hz) as the main power.

2)When voltage fluctuations are larger than the specified value, connect a constant-voltage transformer.
Use a power supply which generates minimal noise across wire and MK80S and ground when excessive noise Generated, connect an insulating transformer.

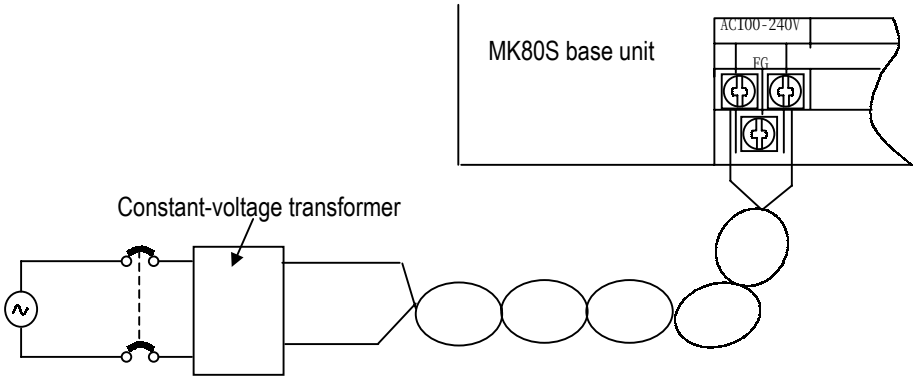

3)Use a power supply which generates minimal noise across wire and across PLC and ground. (When excessive noise is
generated, connect an insulating transformer)

4) When wiring, separate the PLC power supply from those for I/O and power device as shown below.

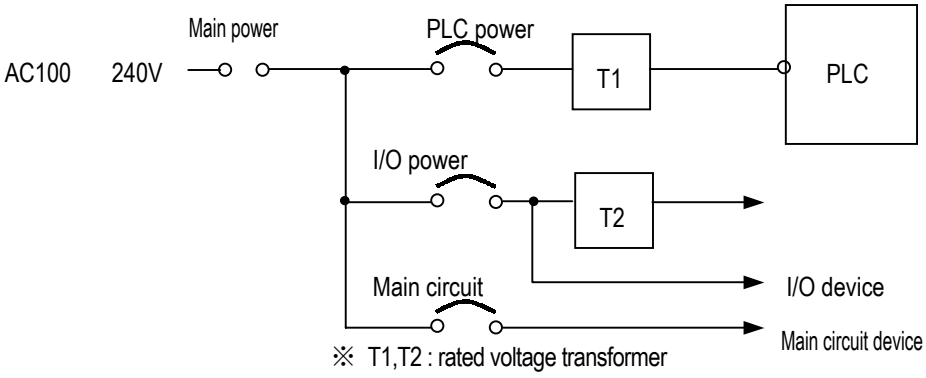

5) To minimize voltage drop, use the thickest (max. 2 ㎟) wires possible

6) Do not bundle the 100 VAC and 24VDC cables with main-circuit (high voltage, large current) wires or the I/O signal wires. If possible, provide more than 80 ㎜ distance between the cables and wires.

7) As a measure against very large surge(e.g. due to lightening),connect a surge absorber as shown below.

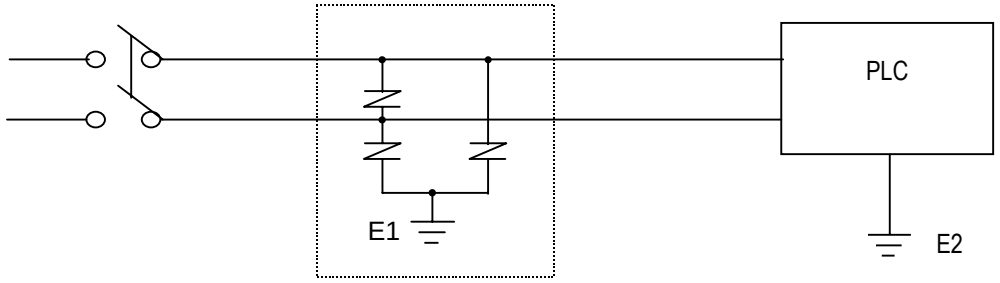

Surge absorber for lightening

Remark

1) Ground the surge absorber(E1) and the PLC(E2) separately from each other.
2) Select a surge absorber making allowances for power voltage rises.

8) Use a insulating transformer or noise filter for protection against noise.

9) Twist every input power supply wires as closely as possible. Do not allow the transformer or noise filter across the duct.

9.2.2 Input and Output Devices Wiring

1)Applicable size of wire to the terminal block connector is 0.18 to 2 ㎟. However, it is recommended to use wire of 0.3 ㎟ for convenience.

2) Separate the input and output lines.

3) I/O signal wires must be at least 100 ㎜(3.94 in) away from high voltage and large current circuit wires.

4) When the I/O signal wires cannot be separated from the main circuit wires and power wires, ground on the PLC side
with batch-shielded cables. Under some conditions it may be preferable to ground on the other side.

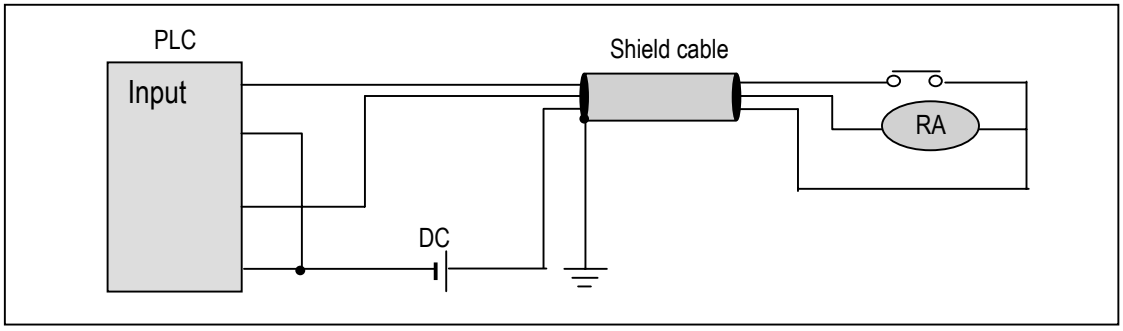

5) If wiring has been done with of piping, ground the piping.

6) Separate the 24VDC I/O cables from the 110VAC and 220VAC cables.

7) If wiring over 200 ㎜(7.88 in) or longer distance, trouble can be caused by leakage currents due to line capacity. Refer to the section 11.4 Example.

9.2.3 Grounding

1)This PLC has sufficient protection against noise, so it can be used without grounding except for special much noise. However, when grounding it should be done conforming to below items.

2)Ground the PLC as independently as possible. Class 3 grounding should be used (grounding resistance 80Ω or less).

3)When independent grounding is impossible, use the joint grounding method as shown in the figure below (B).

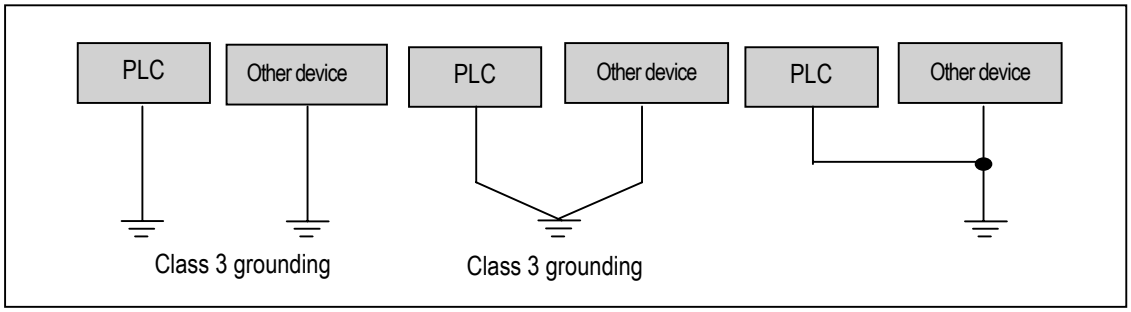

(A)Independent grounding : Best (B) Joint grounding : Good (C) Joint grounding : Not allowed

4)Use 2 ㎟(14AWG) or thicker grounding wire. Grounding point should be as near as possible to the PLC to minimize the distance of grounding cable.

9.2.4 Cable Specifications for wiring

The specifications for wiring is as follows:

Kinds of external connection	Cable Specifications (㎟)	
	Minimum	Maximum
Digital Input	0.18 (AWG24)	1.5 (AWG16)
Digital Output	0.18 (AWG24)	2.0 (AWG14)
Analog Input / Output	0.18 (AWG24)	1.5 (AWG16)
Communication	0.18 (AWG24)	1.5 (AWG16)
Main power	1.5 (AWG16)	2.5 (AWG12)
Grounding	1.5 (AWG16)	2.5 (AWG12)

- Be sure to use solderless terminal for power supply and I/O wiring.
- Be sure to use M3 type as terminal screw.
- Make sure that terminal screw is connected by 6 9 kg · cm torque..
- Be sure to use fork shaped terminal screw as shown below.

cable solderness terminal (fork shaped)

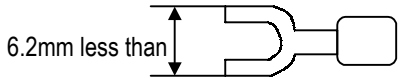

Chapter 10 Maintenance

Be sure to perform daily and periodic maintenance and inspection in order to maintain the PLC in the best conditions.

10.1 Maintenance and Inspection

The I/O module mainly consist of semiconductor devices and its service life is semi-permanent. However, periodic inspection is requested for ambient environment may cause damage to the devices. When inspecting one or two times per six months, check the following items.

Check Items		Judgment	Corrective Actions
Ambient environment	Temperature	0 ~ + 55°C	Adjust the operating temperature and humidity with the defined range.
	Humidity	5 ~ 95%RH	
	Vibration	No vibration	Use vibration resisting rubber or the vibration prevention method.
Play of modules		No play allowed	Securely enrage the hook.
Connecting conditions of terminal screws		No loose allowed	Retighten terminal screws.
Change rate of input voltage		– 15% to 10%	Hold it with the allowable range.
Spare parts		Check the number of Spare parts and their Store conditions	Cover the shortage and improve the conditions

10.2 Daily Inspection

The following table shows the inspection and items which are to be checked daily.

Check Items		Check Points	Judgement	Corrective Actions
Connecting conditions of terminal block or extension cable		check for loose mounting screws	Screws should not be loose	Retighten Screws
		Check the distance between solderless terminals	Proper clearance should be provided	Correct
Indica-ting LED	PWR LED	Check that the LED is ON	ON(OFF indicates an error)	See chapter 11
	Run LED	Check that the LED is ON during Run	ON (flickering indicates an error)	See chapter 11
	ERR LED	Check that the LED is OFF during Run	OFF(ON indicates an error)	See chapter 11
	Input LED	Check that the LEO turns ON and OFF	ON when input is ON, OFF when input is off	See chapter 11
	Output LED	Check that the LEO turns ON and OFF	ON when output is ON, OFF when output is off	See chapter 11

10.3 Periodic Inspection

Check the following items once or twice every six months, and perform the needed corrective actions.

Check Items		Checking Methods	Judgment	Corrective Actions
Ambient Environment	Ambient temperature	Measure with thermometer and hygrometer measure corrosive gas	0 ~ 55 °C	Adjust to general standard (Internal environmental standard of control section)
	Ambient Humidity		5 ~ 95%RH	
	Ambience		There should be no corrosive gases	
PLC Conditions	Looseness, Ingress	The module should be move the unit	The module should be mounted securely.	Retighten screws
	dust or foreign material	Visual check	No dust or foreign material	
Connecting conditions	Loose terminal screws	Re-tighten screws	Screws should not be loose	Retighten
	Distance between terminals	Visual check	Proper clearance	Correct
	Loose connectors	Visual check	Connectors should not be loose.	Retighten connector mounting screws
Line voltage check		Measure voltage between input terminals	*85 ~ 264V AC *20~28V DC	Change supply power
Battery		Battery time and battery capacity life indicated, Change the reduction	Check total power failure If battery capacity time and the specified source	Battery capacity reduction should not be indicated battery when specified service life is exceeded
Fuse		Visual check	No melting disconnection	If fuse melting disconnection, change the fuse periodically because a surge current can cause heat

Chapter 11 Troubleshooting

The following explains contents, diagnosis and corrective actions for various errors that can occur during system operation.

11.1 Basic Procedures of Troubleshooting

System reliability not only depends on reliable equipment but also on short downtimes in the event of faults. The short discovery and corrective action is needed for speedy operation of system. The following shows the basic instructions for troubleshooting.

1) Visual checks

Check the following points.

- Machine operating condition (in stop and operating status)
- Power On/Off
- Status of I/O devices
- Condition of wiring (I/O wires, extension and communications cables)
- Display states of various indicators (such as POWER LED, RUN LED, ERR. LED and I/O LED). After checking them, connect peripheral devices and check the operation status of the PLC and the program contents.

2) Trouble Check

Observe any change in the error conditions during the following.

- Switch to the STOP position, and then turn the power on and off.

3) Narrow down the possible causes of the trouble where the fault lies, i.e.:

- Inside or outside of the PLC?
- I/O module or another module?
- PLC program?

11.2 Troubleshooting

This section explains the procedure for determining the cause of troubles as well as the errors and corrective actions.

Is the power LED turned OFF?	Flowchart used when the POWER LED is turned OFF
Is the ERR LED flickering?	Flowchart used when the ERR LED is flickering
Are the RUN LED turned OFF?	Flowchart used when the RUN turned OFF.
I/O module doesn't operate properly	Flowchart used when the output load of the output module doesn't turn on.
Program cannot be written	Flowchart used when a program can't be written to the PLC

11.2.1 Troubleshooting flowchart used when the POWER LED turns OFF.

The following flowchart explains corrective action procedure used when the power is supplied or the power led turns off during operation.

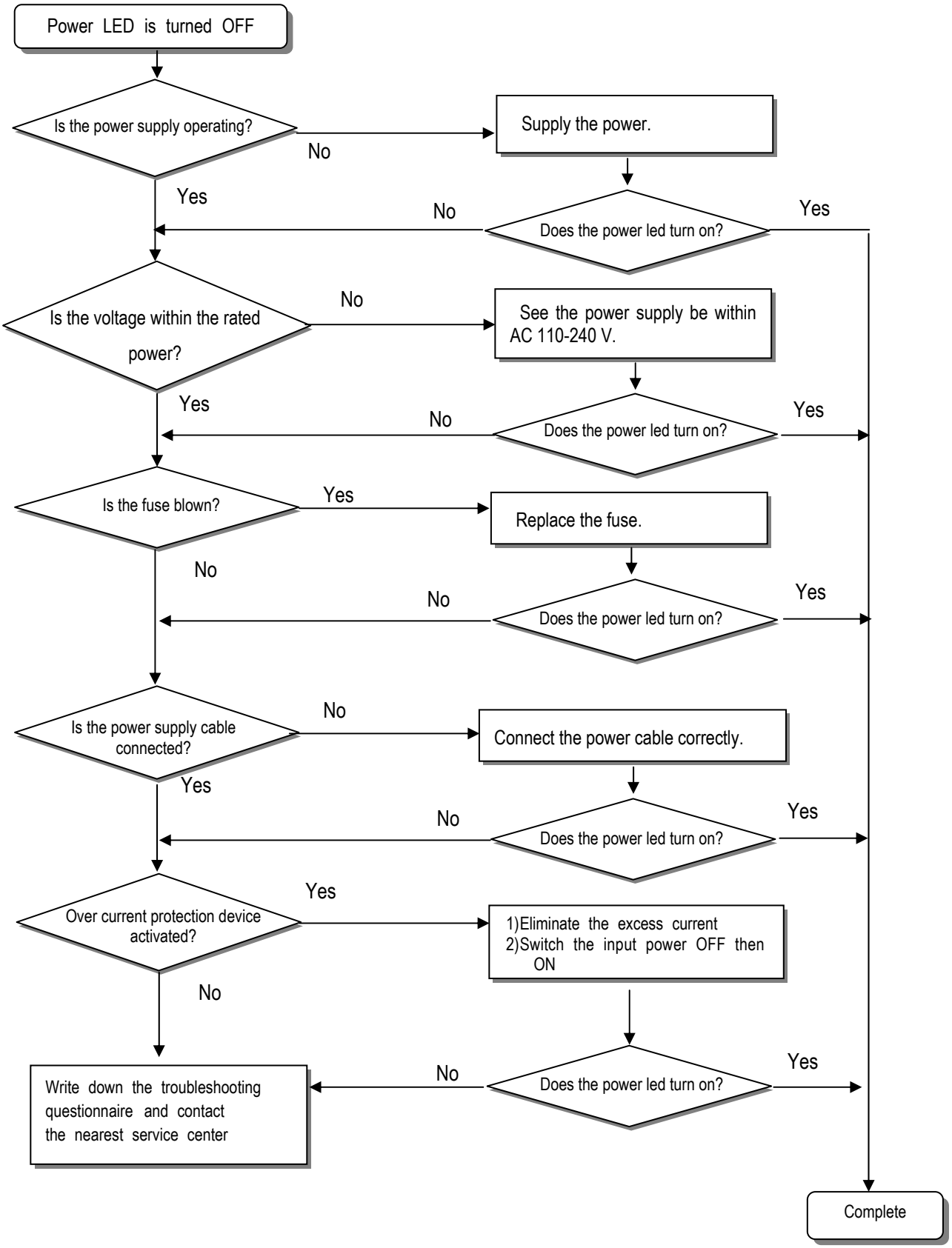

11.2.2 Troubleshooting flowchart used when the ERR LED is flickering.

The following flowchart explains corrective action procedure use when the power is supplied starts or the ERR LED is flickering during operation.

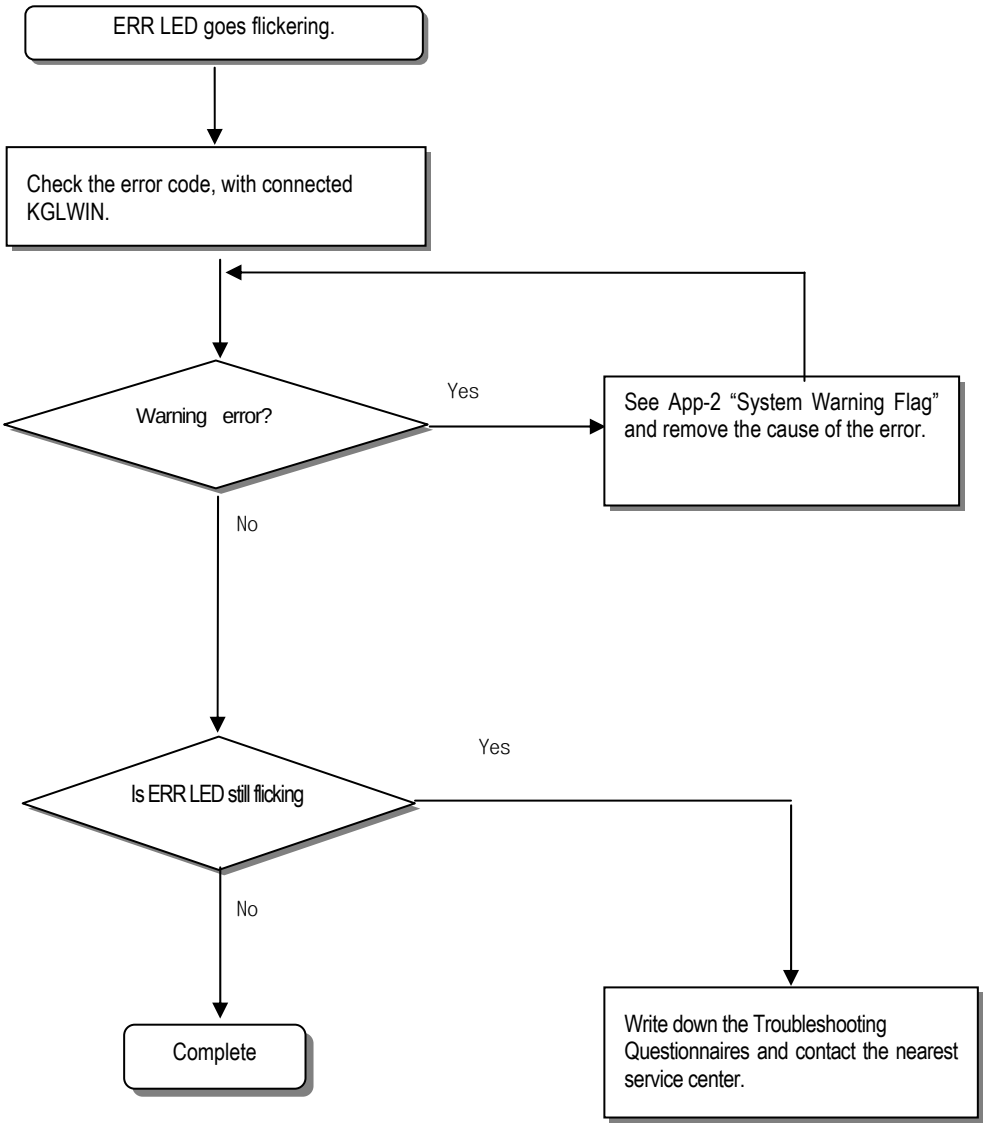

REMARK

Though warning error appears, PLC system doesn't stop but corrective action is needed promptly. If not, it may cause the system failure.

11.2.3 Troubleshooting flowchart used when the RUN turns off.

The following flowchart explains corrective action procedure to treat the lights-out of RUN LED when the power is supplied, operation starts or operation is in the process.

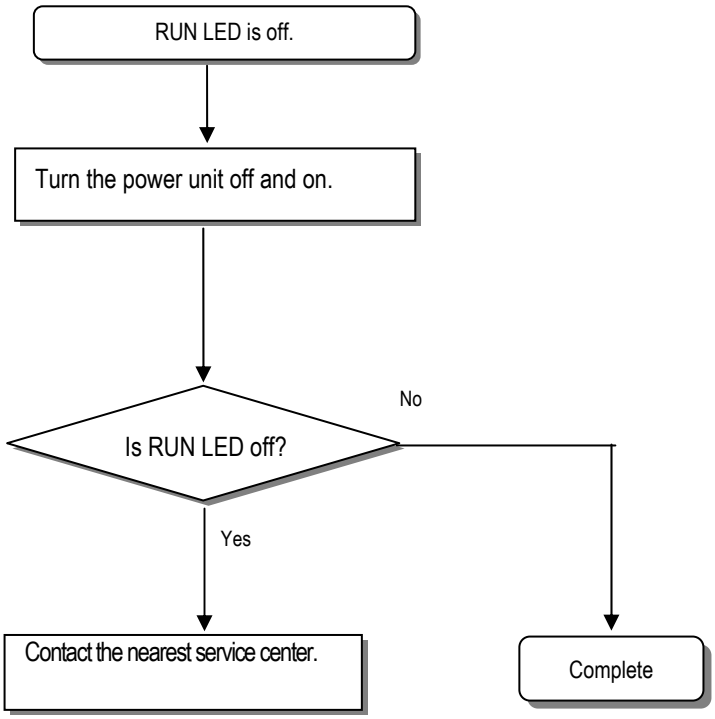

11.2.4 Troubleshooting flowchart used when the I/O part doesn't operate normally.

The following flowchart explains corrective action procedure used when the I/O module doesn't operate normally.

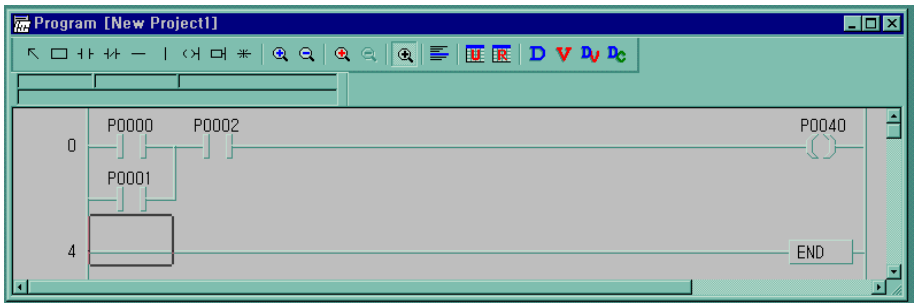

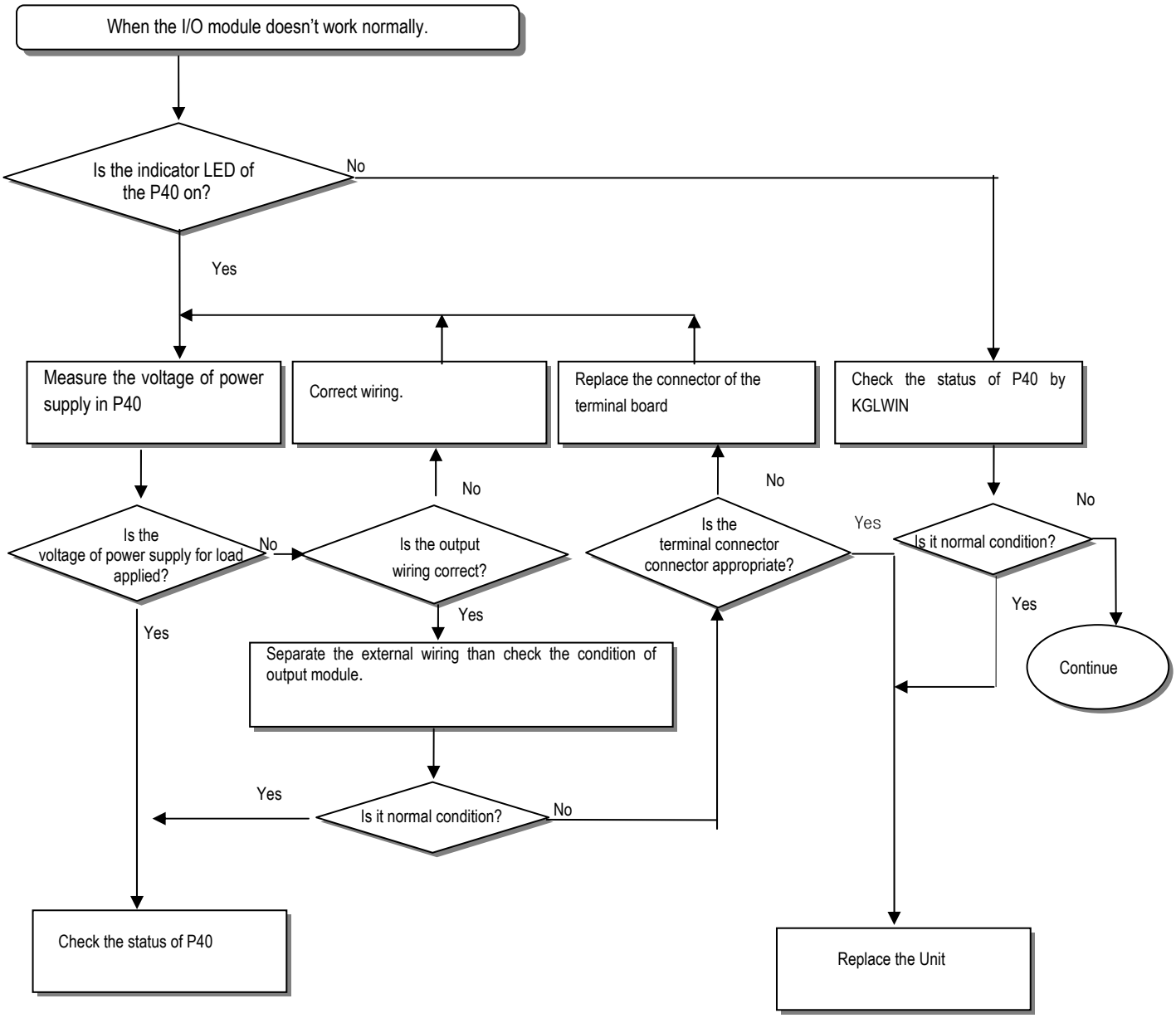

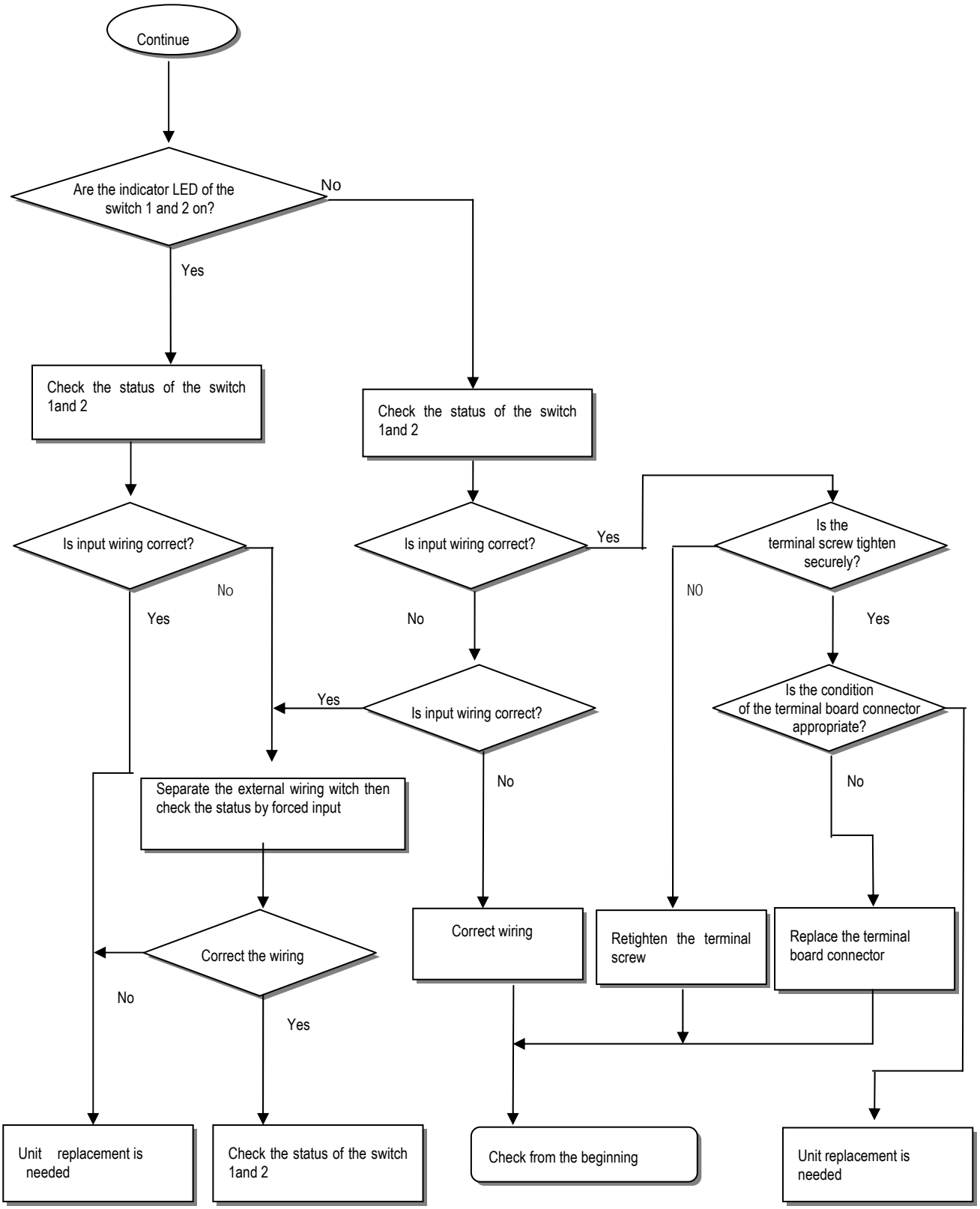
Continue
Are the indicator LED of the switch 1 and 2 on?
No
Yes
Check the status of the switch 1and 2
Check the status of the switch 1and 2
Is input wiring correct?
Yes
No
Is input wiring correct?
Yes
No
Is the terminal screw tighten securely?
NO
Yes
Yes
Is input wiring correct?
Is the condition of the terminal board connector appropriate?
No
No
Separate the external wiring witch then check the status by forced input
Correct the wiring
No
Yes
Correct wiring
Retighten the terminal screw
Replace the terminal board connector
Unit replacement is needed
Check the status of the switch 1and 2
Check from the beginning
Unit replacement is needed

11.2.5 Troubleshooting flowchart used when a program cannot be written to the CPU

The following flowchart shows the corrective action procedure used when a program cannot be written to the PLC module.

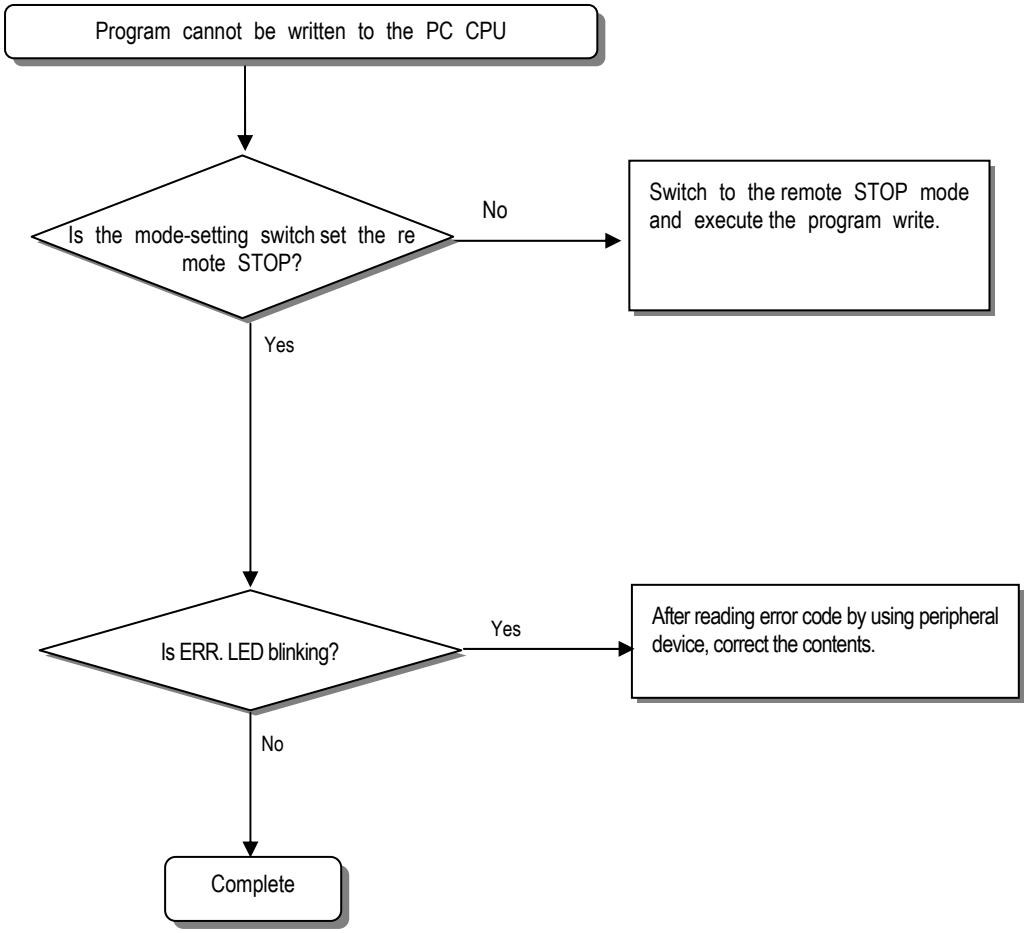

11.3 Troubleshooting Questionnaire

When problems have been met during operation of the MK80S series, please write down this Questionnaires and contact the service center via telephone or facsimile.

• For errors relating to special or communication modules, use the questionnaire included in the User's manual of the unit.

1. Telephone & FAX No
   Tell)
   FAX)
2. Using equipment model:
3. Details of using equipment
   CPU model:
   OS version No.( ),
   Serial No.( )
   KGLWIN version No. used to compile programs: ( )
4. General description of the device or system used as the control object:

5. The kind of the base unit:
– Operation by the mode setting switch ( ),
– Operation by the KGLWIN or communications ( ),
– External memory module operation ( ),

6. Is the ERR. LED of the CPU module turned ON? Yes( ), No( )

7. KGLWIN error message:

8. Used initialization program: initialization program ( )

9. History of corrective actions for the error message in the article 7:

10. Other tried corrective actions:

11. Characteristics of the error
• Repetitive( ): Periodic( ), Related to a particular sequence( ), Related to environment( )
• Sometimes( ): General error interval:

12. Detailed Description of error contents:

13. Configuration diagram for the applied system:

11.4 Troubleshooting Examples

Possible troubles with various circuits and their corrective actions are explained.

11.4.1 Input circuit troubles and corrective actions

The followings describe possible troubles with input circuits, as well as corrective actions.

Condition	Cause	Corrective Actions
Input signal doesn't turn off.	Leakage current of external device (Such as a drive by non-contact switch) 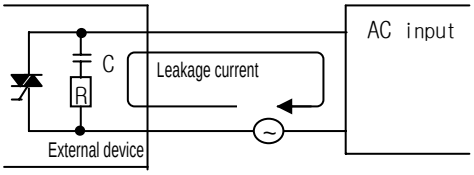	• Connect an appropriate register and capacity, which will make the voltage lower across the terminals of the input module. 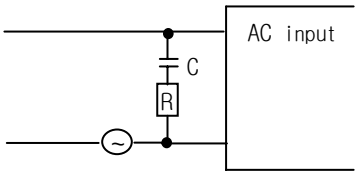
Input signal doesn't turn off. (Neon lamp may be still on)	Leakage current of external device (Drive by a limit switch with neon lamp) 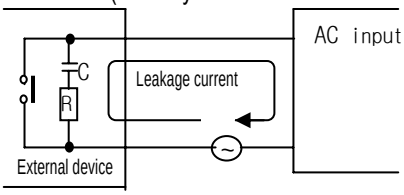	• CR values are determined by the leakage current value. – Recommended value C : 0.1 ~ 0.47 μF R: 47 ~ 120 Ω (1/2W) Or make up another independent display circuit.
Input signal doesn't turn off.	Leakage current due to line capacity of wiring cable. 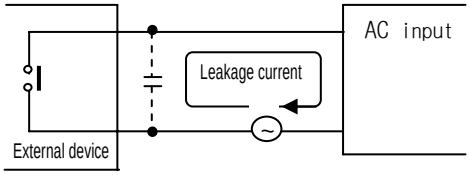	• Locate the power supply on the external device side as shown below. 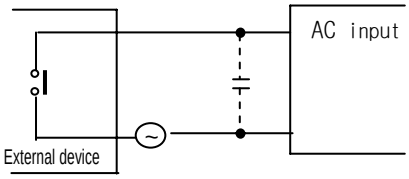
Input signal doesn't turn off.	Leakage current of external device (Drive by switch with LED indicator) 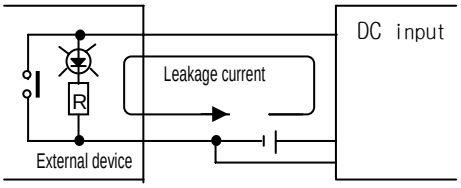	• Connect an appropriate register, which will make the voltage higher than the OFF voltage across the input module terminal and common terminal. 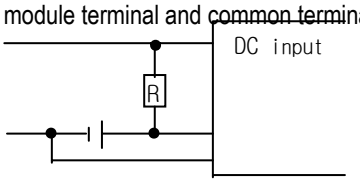
Input signal doesn't turn off.	• Sneak current due to the use of two different power supplies. 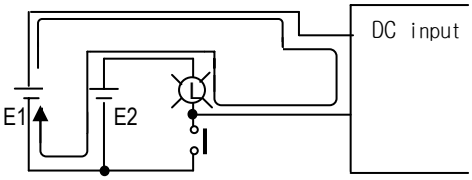 • E1 > E2, sneaked.	• Use only one power supply. • Connect a sneak current prevention diode. 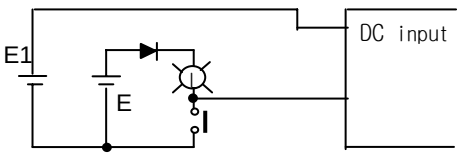

11.4.2 Output circuit troubles and corrective actions

The following describes possible troubles with input circuits, as well as their corrective actions.

Condition	Cause	Corrective Action
When the output is off, excessive voltage is applied to the load.	•Load is half-wave rectified inside (in some cases, it is true of a solenoid) •When the polarity of the power supply is as shown in ①, C is charged. When the polarity is as shown in ②, the voltage charged in C plus the line voltage are applied across D. Max. voltage is approx. $2\sqrt{2}$. 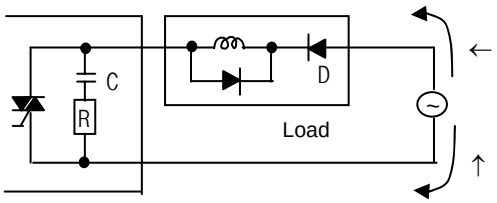 *) If a resistor is used in this way, it does not pose a problem to the output element. But it may make the performance of the diode (D), which is built in the load, drop to cause problems.	• Connect registers of tens to hundreds KΩ across the load in parallel. 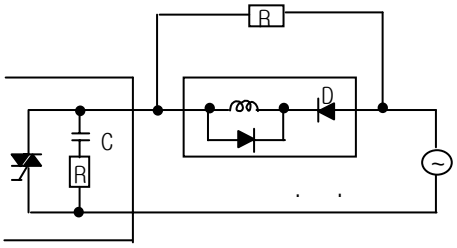
The load doesn't turn off.	• Leakage current by surge absorbing circuit, which is connected to output element in parallel. 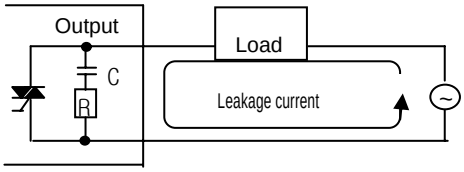 	• Connect C and R across the load, which are of registers of tens KΩ. When the wiring distance from the output module to the load is long, there may be a leakage current due to the line capacity. 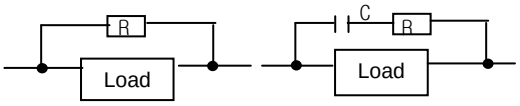
When the load is C-R type timer, time constant fluctuates.	• Leakage current by surge absorbing circuit, which is connected to output element in parallel. 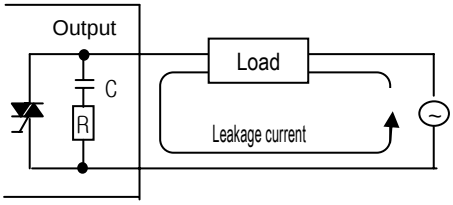 	• Drive the relay using a contact and drive the C-R type timer using the since contact. • Use other timer than the C–R contact some timers have half-ware rectified internal circuits therefore, be cautious. 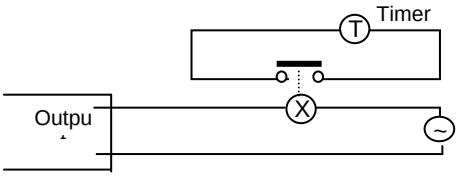
The load does not turn off.	• Sneak current due to the use of two different power supplies. 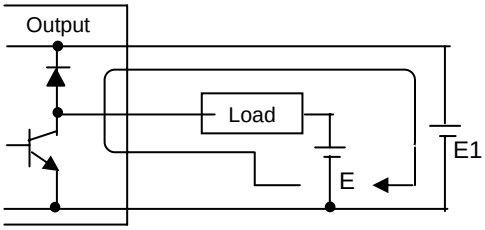 E1<E2, sneaks. E1 is off (E2 is on), sneaks.	• Use only one power supply. • Connect a sneak current prevention diode. 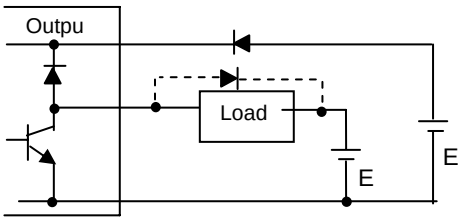 If the load is the relay, etc, connect a counter-electromotive voltage absorbing code as shown by the dot line.

Output circuit troubles and corrective actions (continued).

Condition	Cause	Corrective actions
The load off response time is long.	• Over current at off state [The large solenoid current fluidic load (L/R is large) such as is directly driven with the transistor output. 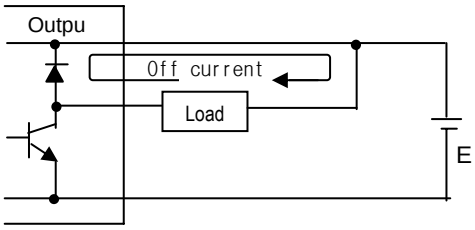 • The off response time can be delayed by one or more second as some loads make the current flow across the diode at the off time of the transistor output.	• Insert a small L/R magnetic contact and drive the load using the same contact. 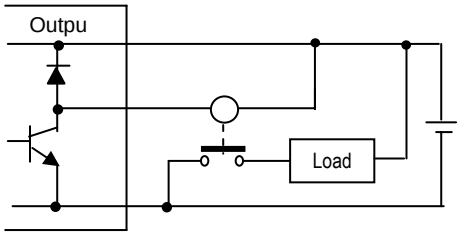
Output transistor is destroyed.	Surge current of the white lamp 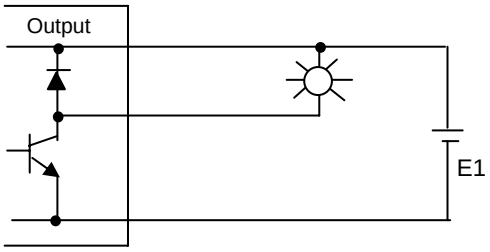 A surge current of 10 times or more when turned on.	• To suppress the surge current make the dark current of 1/3 to 1/5 rated current flow. 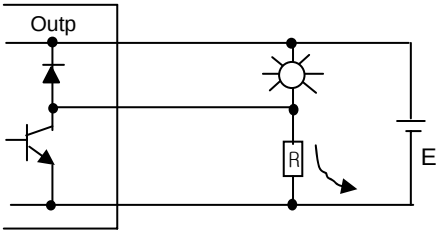 Sink type transistor output 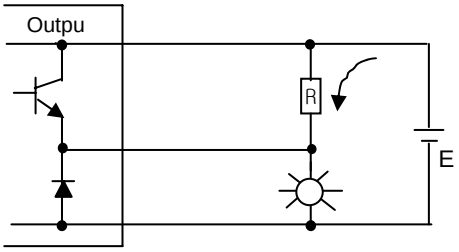 Source type transistor output

11.5 Error code list

Error Code	Message	CPU state	Message	Cause	Corrective Actions
0001h	Internal system error	Stop	System Error	Fault of some area of operating ROM, or H/W defect	Contact the service center.
0002h	OS ROM error	Stop	OS ROM Error	Internal system ROM is defected	Contact the service center.
0003h	OS RAM error	Stop	OS RAM Error	Internal system RAM is defected	Contact the service center.
0004h	Data RAM error	Stop	DATA RAM Error	Data RAM is defected	Contact the service center.
0005h	Program RAM error	Stop	PGM RAM Error	Program RAM is defected	Contact the service center.
0006h	Gate array error	Stop	G/A Error	Defect of dedicated LSI for sequence instruction processing	Contact the service center.
0007h	Sub rack power down error	Stop	Sub Power Error	Extension Rack Power down or Error	Check the power of the extension rack
0008h	OS WDT error	Stop	OS WDT Error	CPU OS watch dog error	Turn the power off and restart the system. Contact the service center.
0009h	Common RAM error	Stop	Common RAM Error	Common RAM interface error	Contact the service center.
000Ah	Fuse break error	Continue (stop)	I/O Fuse Error	Break of fuse used in output units or Mixed I/O	Check the fuse LED of the unit. Turn the power off and replace the fuse.
000Bh	Instruction code error	Stop	OP Code Error	Instructions unreadable by the CPU are included. (during execution)	Contact the service center.
000Ch	Flash memory error(during execution)	Stop	User Memory Error	Read to/Write from the inserted Flash memory is not performed.	Check and replace the flash memory.
0010h	I/O slot error	Stop	I/O Slot Error	← Mounting/dismounting of I/O units during operation, or connection fault ↑ I/O unit defect or extension cable defect	← Turn the power off and mount the unit firmly, and restart the system. ↑ Replace the I/O unit or extension cable.
0011h	Maximum I/O error	Stop	MAX I/O Error	Points of mounted I/O units overrun the maximum I/O points. (FMM mounting number over error, MINI_MAP over…)	Replace the I/O unit.
0012h	Special card interface error	Stop	Special I/F Error	Special Card Interface error	Contact the service center.
0013h	FMM 0 I/F error	Stop	FMM 0 I/F Error	FMM 0 I/F Error	Contact the service center.
0014h	FMM 1 I/F error	Stop	FMM 1 I/F Error	FMM 1 I/F Error	Contact the service center.
0015h	FMM 2 I/F error	Stop	FMM 2 I/F Error	FMM 2 I/F Error	Contact the service center.
0016h	FMM 3 I/F error	Stop	FMM 3 I/F Error	FMM 3 I/F Error	Contact the service center.
0020h	Parameter Error	Stop	Parameter Error	A written parameter has changed, or checksum error	Correct the content of the parameter.
0021h	I/O Parameter Error	Stop (continue)	I/O Parameter Error	When the power is applied or RUN starts, I/O unit reservation information differs from the types of real loaded I/O units.	Correct the content of the parameter, or reallocate or replace the I/O unit.
0022h	Maximum I/O Over	Stop	I/O PARA Error	The point of the reserved I/O information or real loaded I/O units overruns the maximum I/O point.	Correct the content of the parameter.
0023h	FMM 0 Parameter Error	Stop	FMM 0 PARA Error	FMM 0 Parameter Error	Correct the parameter.
0024h	FMM 1 Parameter Error	Stop	FMM 1 PARA Error	FMM 1 Parameter Error	Correct the parameter.
0025h	FMM 2 Parameter Error	Stop	FMM 2 PARA Error	FMM 2 Parameter Error	Correct the parameter.

(continued)

Error Code	Error	CPU state	Message	Cause	Corrective Actions
0026h	FMM 3 Parameter Error	Stop	FMM 3 PARA Error	FMM 3 Parameter Error	Correct the parameter.
0030h	Operation Error	Stop	Operation Error	• A digit of other than 0 to 9 has met during BCD conversion. • An operand value is outside the defined operand range.	Correct the content of the error step.
0031h	WDT Over	Continue (stop)	WDT Over Error	Scan time has overrun the watch dog time.	Check the maximum scan time of the program and modify the program or insert programs.
0032h	Error of Program Change during run.	Stop	PGM Change Error	An error has occurred at program change during run. (NO SBRT, JME and END …)	Program replacement has not been completed during run. (JMP ~ JME, FOR ~ NEXT, CALLx and SBRTx …)
0033h	Program Check Error	Continue	Code Check Error	An error has occurred while checking a program.	Correct the error.
0040h	Code Check Error	Stop	Code Check Error	An instruction unreadable by the CPU is included.	Correct the error step.
0041h	Missing the END instruction in the program.	Stop	Miss END Error	The program does not have the END instruction.	Insert the END instruction at the bottom of the program.
0042h	Missing the RET instruction in the program.	Stop	Miss RET Error	The subroutine does not has the RET instruction at its bottom.	Insert the END instruction at the bottom of the program.
0043h	Missing the SBRT instruction in the subroutine program.	Stop	Miss SBRT Error	The subroutine does not has the SBRT instruction.	Insert the SBRT instruction.
0044h	The JMP ~ JME instruction error	Stop	JMP(E) Error	The JMP ~ JME instruction error	Correct the JMP ~ JME instruction.
0045h	The FOR ~ NEXT instruction error	Stop	FOR~NEXT Error	The FOR ~ NEXT instruction error	Correct the FOR ~ NEXT instruction.
0046h	The MCS ~ MCSCLR instruction error	Stop	MCS~MCSCLR Error	The MCS ~ MCSCLR instruction error	Correct the MCS ~ MCSCLR instruction.
0047h	The MPUSH ~ MPOP instruction error	Stop	MPUSH ~ MPOP Error	The MPUSH ~ MPOP instruction error	Correct the MPUSH ~ MPOP instruction
0048h	Dual coil error	Stop	DUAL COIL Error	Timer or counter has been duplicated.	Correct timer, counter.
0049h	Syntax error	Stop	Syntax Error	Input condition error, or too much use of LOAD or AND(OR) LOAD.	Check and correct the program.
0050h	Battery error	Continue	Battery Error	Backup battery voltage error	Replace the battery under the present condition.

Appendix 1. System Definitions

1) Option

(1) Connect Option

You should set the communication port (COM1～4) to communicate with PLC.

- ◆ Select the ***Project-Option-Connect Option*** in menu.
- ◆ Default Connection is RS-232C interface.

For the detail information about **Connect Option**, refer to KGLWIN Manual.

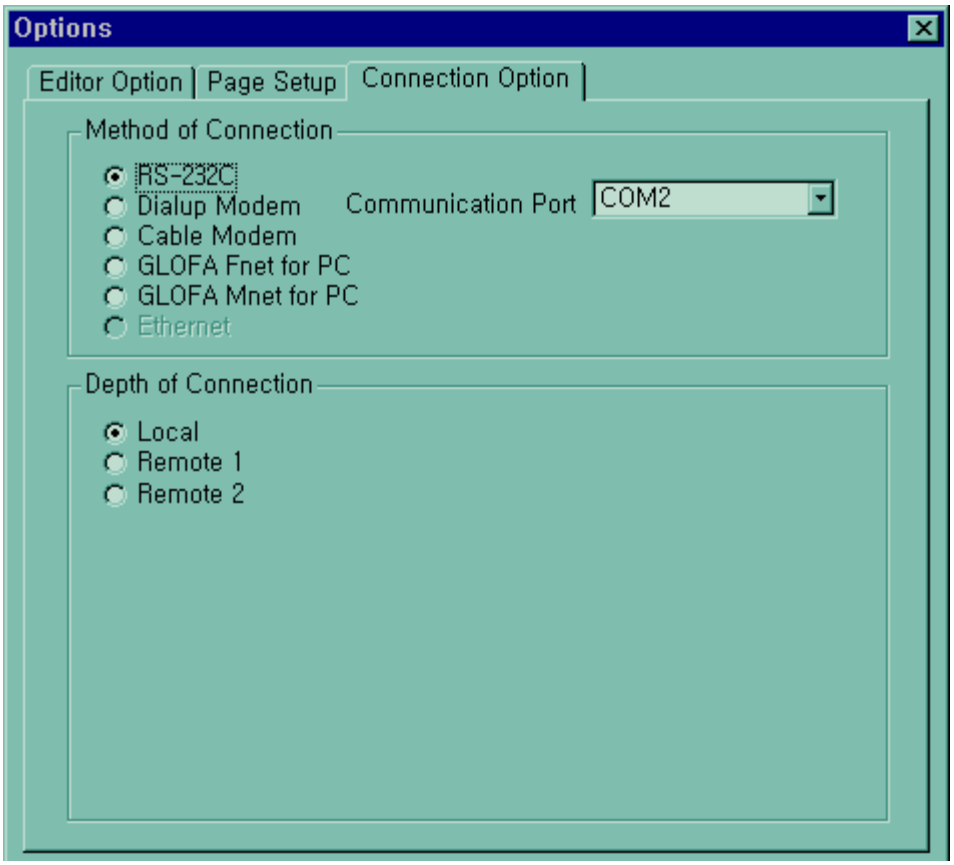

(2) Editor option

◆ Monitor display type

Select the desired type in the monitor display type(4 types) ,click the O.K button
You can select a one type .

◆ Source File Directory :
You can set directories for the files to be created in KGLWIN.
In Source Directory, KGLWIN saves source program files of program, parameter etc.

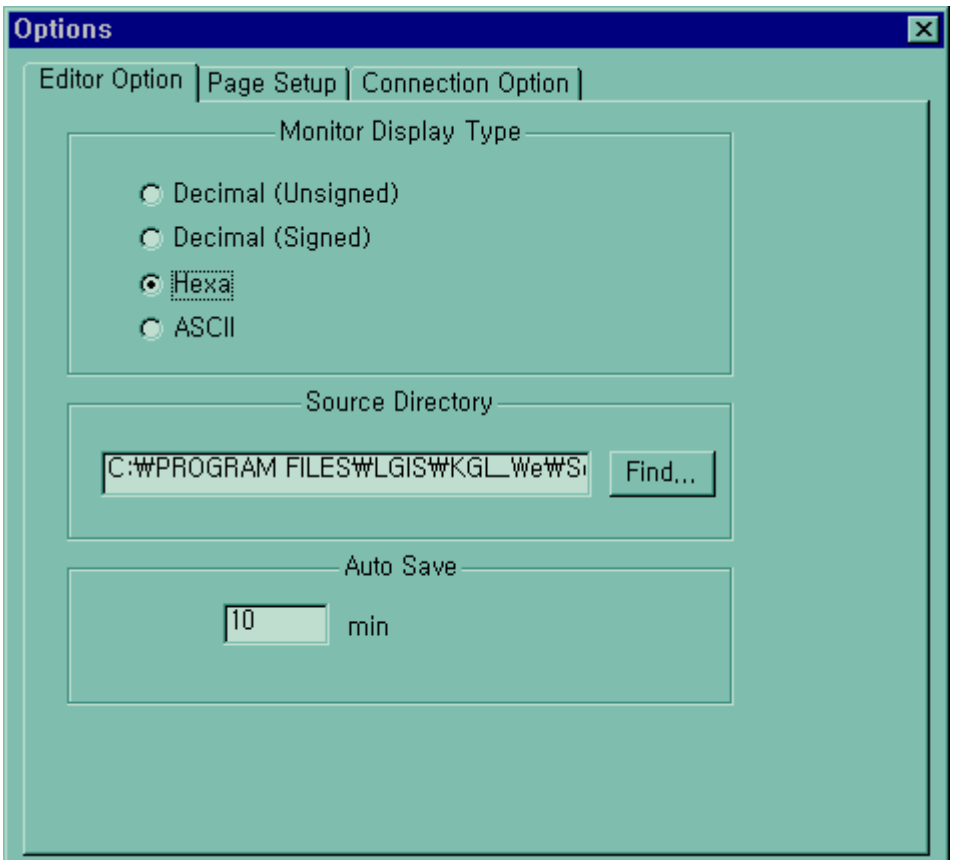

◆ Auto save
This function is to set the time interval for Auto saving.
Automatically saved file is saved in the current directory. The file is automatically deleted when the program window is closed. Therefore if a program cannot be saved by "Program Error" before program is not saved, you can recover some program by loading auto saved file.

(3) Page setup

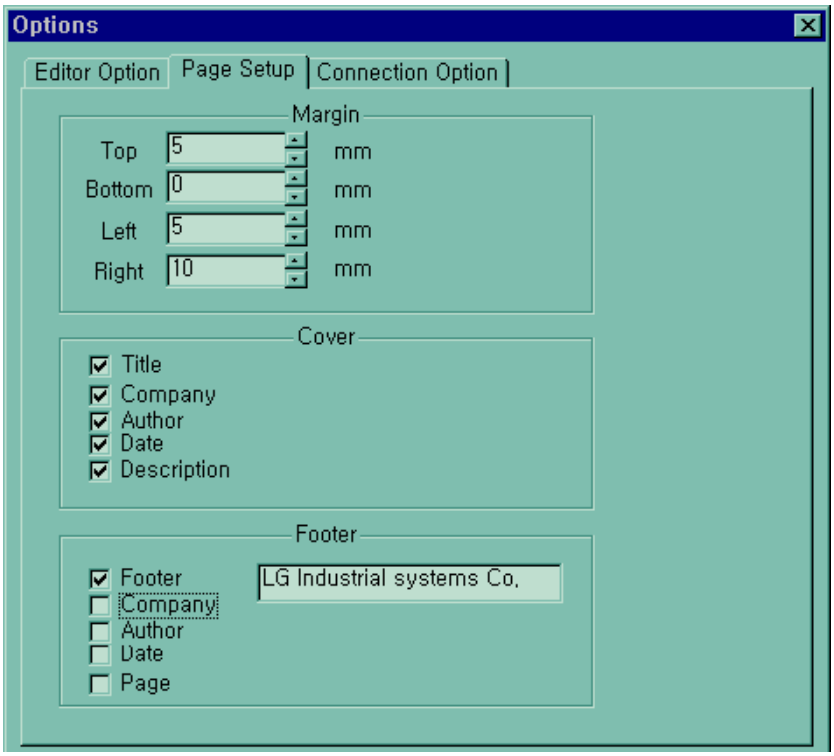

You can select print option when the project print out .(margin, cover, footer)

2) Basic Parameters

The basic parameters are necessary for operation of the PLC.
Set the 'Latch area', 'Timer boundary'' , 'Watchdog timer', 'PLC operation mode', 'Input setting', 'Pulse catch'

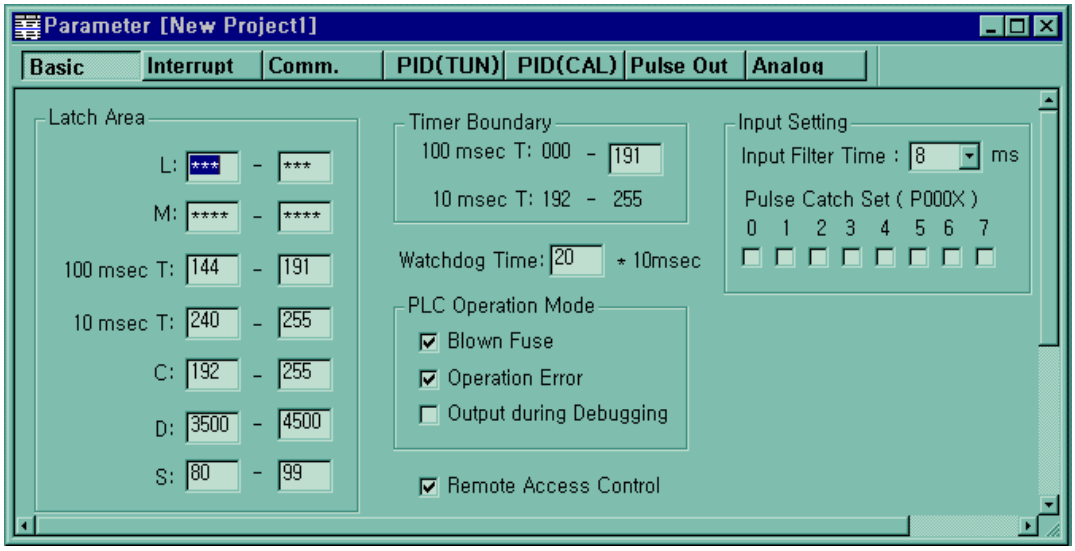

(1) Latch area setting
Set the retain area on the inner device.

(2) Timer boundary setting
Set the 100ms timer boundary. (the rest of timer area allocates 10ms automatically)

(3) Watchdog timer setting

For the purpose of the watch of normal program execution ,.

This parameter is used to set the maximum allowable execution time of a user program in order to supervisor its normal or abnormal operation. (Setting range is 1ms ~ 6000ms)

(4) Input setting
set the input filter constant and input catch contact point

(5) Remote access enable setting

This parameter enables remote access authority

Appendix 2. Flag List

1) Special relay (F)

This flag is useful to edit user program.

Relay	Function	Description
F0000	RUN mode	Turns on when the CPU in the RUN mode.
F0001	Program mode	Turns on when the CPU in the Program mode
F0002	Pause mode	Turns on when the CPU in the Pause mode
F0003	Debug mode	Turns on when the CPU in the Debug mode
F0006	Remote mode	Turns on when the CPU in the Remote mode
F0007	User memory installation	Turns on when a user memory is installed.
F0008 and F0009	Unused	
F000A	User memory operation	Turns on when a user memory is being operated
F000B to F000E	Unused	
F000F	Execution of the STOP instruction	Turns on when the STOP instruction is being operated.
F0010	Always On	Always On
F0011	Always Off	Always Off
F0012	1 Scan On	1 Scan On
F0013	1 Scan Off	1 Scan Off
F0014	Scan toggle	Scan toggle
F0015 to F001F	Unused	
F0020	1 step run	Turns on when the 1 step run is operated in the Debug mode.
F0021	Breakpoint run	Turns on when the breakpoint run is operated in the Debug mode.
F0022	Scan run	Turns on when the scan run is operated in the Debug mode.
F0023	Coincident junction value run	Turns on when the coincident junction run is operated in the Debug mode.
F0024	Coincident word value run	Turns on when the coincident word run is operated in the Debug mode.
F0025 to F002F	Unused	
F0030	Fatal error	Turns on when a fatal error has occurred.
F0031	Ordinary error	Turns on when an ordinary error has occurred.
F0032	WDT Error	Turns on when a watch dog timer error has occurred.
F0033	I/O combination error	Turns on when an I/O error has occurred. (When one or more bit(s) of F0040 to F005F turns on)
F0034	Battery voltage error	Turns on when the battery voltage has fallen below the defined value.
F0035	Fuse error	Turns on when a fuse of output modules has been disconnected.
F0036 to F0038	Unused	
F0039	Normal backup operation	Turns on when the data backup is normal.
F003A	RTC data error	Turns on when the RTC data setting error has occurred.
F003B	During program edit	Turns on during program edit while running the program.
F003C	Program edit error	Turns on when a program edit error has occurred while running the program.
F003D to F003F	Unused	

(Continued)

Relay	Function	Description
F0040 to F005F	I/O error	When the reserved I/O module (set by the parameter) differs from the real loaded I/O module or a I/O module has been mounted or dismounted, the corresponding bit turns on.
F0060 to F006F	Storing error code	Stores the system error code, (See Section 2.9)
F0070 to F008F	Storing the disconnection state of fuses	When a fuse has disconnected in an output module, the corresponding bit to the slot turns on.
F0090	20-ms cycle clock	Turning On/Off is repeated with a constant cycle. On Off
F0091	100-ms cycle clock	
F0092	200-ms cycle clock	
F0093	1-sec cycle clock	
F0094	2-sec cycle clock	
F0095	10-sec cycle clock	
F0096	20-sec cycle clock	
F0097	60-sec cycle clock	
F0098 to F009F	Unused	
F0100	User clock 0	Turning On/Off is repeated as many times as the scan specified by Duty instruction. DUTY F010x N1 N2 N2 scan Off N1 scan Off
F0101	User clock 1	
F0102	User clock 2	
F0103	User clock 3	
F0104	User clock 4	
F0105	User clock 5	
F0106	User clock 6	
F0107	User clock 7	
F0108 to F010fF	Unused	
F0110	Operation error flag	Turns on when an operation error has occurred.
F0111	Zero flag	Turns on when the operation result is “0”.
F0112	Carry flag	Turns on when a carry occurs due to the operation.
F0113	All outputs off	Turns on when an output instruction is executed.
F0114	Common RAM R/W error	Turns on when a memory access error of the special module has occurred.
F0115	Operation error flag (Latch)	Turns on when an operation error has occurred.(Latch)
F0116 to F011F	Unused	
F0120	LT flag	Turns on if $S_1 < S_2$ when using the CMP instruction.
F0121	LTE flag	Turns on if $S_1 \leq S_2$ when using the CMP instruction.
F0122	EQU flag	Turns on if $S_1 = S_2$ when using the CMP instruction.
F0123	GT flag	Turns on if $S_1 > S_2$ when using the CMP instruction.
F0124	GTE flag	Turns on if $S_1 \geq S_2$ when using the CMP instruction.
F0125	NEQ flag	Turns on if $S_1 \neq S_2$ when using the CMP instruction.
F0126 to F012F	Unused	
F0130 to F013F	AC Down Count	Stores AC down counting value.

(Continued)

Relay	Function	Description
F0140 to F014F	FALS No.	The error code generated by FALS instruction is stored to this flag.
F0150 to F015F	PUT/GET error flag	When a common RAM access error of special modules has occurred an output module, the corresponding bit to the slot turns on.
F0160 to F016F	Unused	
F0170	HSC output bit	Turn on when the current value of HSC reaches setting value
F0171	Carry flag for HSC	Turn on when overflow or underflow is occurred on the HSC current value
F180 to F19F	Current value of high speed counter	Stores the current value of high speed counter (F18 : lower word, F19 : upper word)
F200 to F49F	Unused	
F0500 to F050F	Maximum scan time	Stores the maximum scan time.
F0510 to F051F	Minimum scan time	Stores the minimum scan time.
F0520 to F052F	Present scan time	Stores the present scan time.
F0530 to F053F	Clock data (year/month)	Clock data (year/month)
F0540 to F054F	Clock data (day/hour)	Clock data (day/hour)
F0550 to F055F	Clock data (minute/second)	Clock data (minute/second)
F0560 to F056F	Clock data (day of the week)	Clock data (day of the week)
F0570 to F058F	Unused	
F0590 to F059F	Storing error step	Stores the error step of the program.
F0600 to F060F	Storing FMM step	If a FMM related error has occurred, its occurrence information is stored.
F0610 to F063F	Unused	

Appendix 3 External Dimensions (unit: mm)

1) Base unit

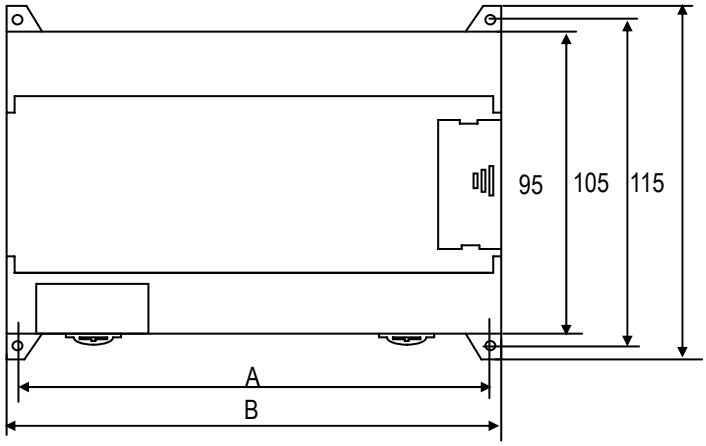

	A	B
10points	85	95
20points	135	145
30points	135	145
40points	165	175
60points	215	225

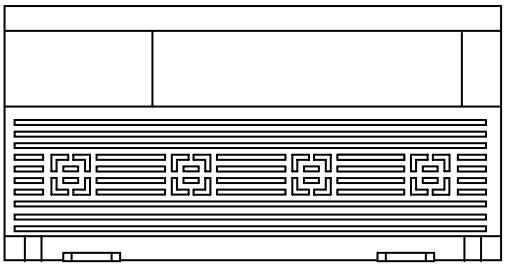

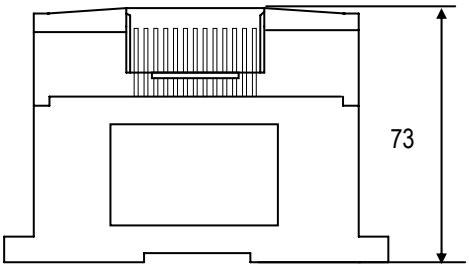
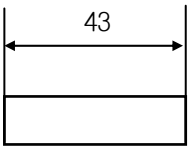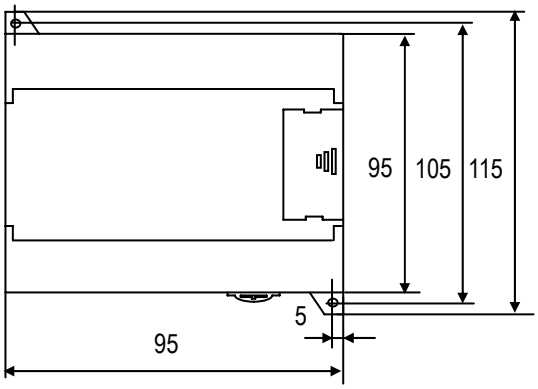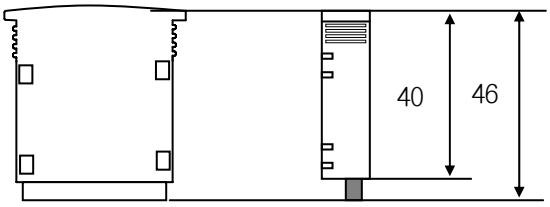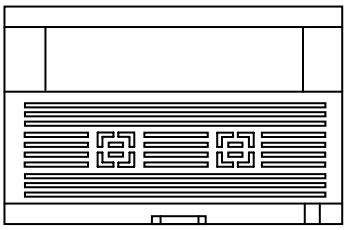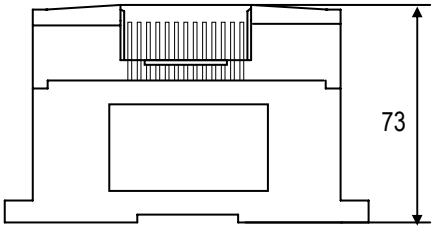
2) Extension / Option module