MITSUBISHI ELECTRIC

FR-D700

Frequency Inverter

Instruction Manual

FR-D720S SC EC
FR-D740 SC EC

Art. No: 260451
14 02 2013
Version A

MITSUBISHI ELECTRIC INDUSTRIAL AUTOMATION

Version check

Instruction Manual
Inverter FR-D700 SC EC
Art. no.: 260451

Version	Changes / Additions / Corrections
A 02/2013 akl	—

Thank you for choosing this Mitsubishi inverter.

This instruction manual provides instructions for advanced use of the FR-D700 SC series inverters. Incorrect handling might cause an unexpected fault. Before using the inverter, always read this instruction manual to use the equipment to its optimum.

Safety instructions

Do not attempt to install, operate, maintain or inspect the inverter until you have read through this instruction manual carefully and can use the equipment correctly. Do not use the inverter until you have a full knowledge of the equipment, safety information and instructions. In this instruction manual, the safety instruction levels are classified into "WARNING" and "CAUTION".

WARNING:

Assumes that incorrect handling may cause hazardous conditions, resulting in death or severe injury.

CAUTION:

Assumes that incorrect handling may cause hazardous conditions, resulting in medium or slight injury, or may cause physical damage only.

Note that even the CAUTION level may lead to a serious consequence according to conditions. Please follow strictly the instructions of both levels because they are important to personnel safety.

Electric shock prevention

WARNING:

- ***While power is on or when the inverter is running, do not open the front cover. Otherwise you may get an electric shock.***
- ***Do not run the inverter with the front cover removed. Otherwise, you may access the exposed high-voltage terminals or the charging part of the circuitry and get an electric shock.***
- ***Even if power is off, do not remove the front cover except for wiring or periodic inspection. You may access the charged inverter circuits and get an electric shock.***
- ***Before starting wiring or inspection, check to make sure that the operation panel indicator is off, wait for at least 10 minutes after the power supply has been switched off, and check that there are no residual voltage using a tester or the like. The capacitor is charged with high voltage for some time after power off and it is dangerous.***
- ***This inverter must be earthed. Earthing must conform to the requirements of national and local safety regulations and electrical codes. (JIS, NEC section 250, IEC 536 class 1 and other applicable standards)***
  Use a neutral-point earthed (grounded) power supply for 400V class inverter in compliance with EN standard.
- ***Any person who is involved in the wiring or inspection of this equipment should be fully competent to do the work.***
- ***Always install the inverter before wiring. Otherwise, you may get an electric shock or be injured.***
- ***If your application requires by installation standards an RCD (residual current device) as up stream protection please select according to DIN VDE 0100-530 as following:***
  Single phase inverter type A or B
  Three phase inverter only type B
- ***Perform setting dial and key operations with dry hands to prevent an electric shock. Otherwise you may get an electric shock.***
- ***Do not subject the cables to scratches, excessive stress, heavy loads or pinching. Otherwise you may get an electric shock.***
- ***Do not replace the cooling fan while power is on. It is dangerous to replace the cooling fan while power is on.***
- ***Do not touch the printed circuit board with wet hands. You may get an electric shock.***
- ***When measuring the main circuit capacitor capacity, the DC voltage is applied to the motor for 1s at powering off. Never touch the motor terminal, etc. right after powering off to prevent an electric shock.***

Fire prevention

CAUTION:

- ***Mount the inverter to incombustible material. Install the inverter on a nonflammable wall without holes (so that nobody can touch the inverter heatsink on the rear side, etc.). Mounting it to or near combustible material can cause a fire.***
- ***If the inverter has become faulty, switch off the inverter power. A continuous flow of large current could cause a fire.***
- ***When using a brake resistor, make up a sequence that will turn off power when an alarm signal is output. Otherwise, the brake resistor may excessively overheat due to damage of the brake transistor and such, causing a fire.***
- ***Do not connect a resistor directly to the DC terminals P/+, N/–. This could cause a fire and destroy the inverter. The surface temperature of braking resistors can far exceed 100°C for brief periods. Make sure that there is adequate protection against accidental contact and a safe distance is maintained to other units and system parts.***

Injury prevention

CAUTION:

- ***Apply only the voltage specified in the instruction manual to each terminal. Otherwise, burst, damage, etc. may occur.***
- ***Ensure that the cables are connected to the correct terminals. Otherwise, burst, damage, etc. may occur.***
- ***Always make sure that polarity is correct to prevent damage, etc. Otherwise, burst, damage, etc. may occur.***
- ***While power is on or for some time after power-off, do not touch the inverter as it is hot and you may get burnt.***

Additional instructions

Also note the following points to prevent an accidental failure, injury, electric shock, etc.

Transport and installation

CAUTION:

- ***Transport the product using the correct method that corresponds to the weight. Failure to observe this could lead to injuries.***
- ***Do not stack the inverter boxes higher than the number recommended.***
- ***Ensure that installation position and material can withstand the weight of the inverter. Install according to the information in the instruction manual.***
- ***Do not install or operate the inverter if it is damaged or has parts missing. This can result in breakdowns.***
- ***When carrying the inverter, do not hold it by the front cover or setting dial; it may fall off or fail.***
- ***Do not stand or rest heavy objects on the product.***
- ***Check the inverter mounting orientation is correct.***
- ***Prevent other conductive bodies such as screws and metal fragments or other flammable substance such as oil from entering the inverter.***
- ***As the inverter is a precision instrument, do not drop or subject it to impact.***
- ***Use the inverter under the following environmental conditions. Otherwise, the inverter may be damaged.***

Operating Condition	Specifications
Ambient temperature	−10°C to +50°C (non-freezing)
Ambient humidity	90% RH or less (non-condensing)
Storage temperature	−20°C to +65°C ①
Atmosphere	Indoors (free from corrosive gas, flammable gas, oil mist, dust and dirt)
Altitude	Maximum 1000m above sea level for standard operation. After that derate by 3% for every extra 500m up to 2500m (91%)
Vibration	5.9m/s^2 or less at 10 to 55Hz (directions of X, Y, Z axes)

① Temperature applicable for a short time, e.g. in transit.

Wiring

CAUTION:

- ***Do not install assemblies or components (e. g. power factor correction capacitors) on the inverter output side, which are not approved from Mitsubishi.***
- ***The direction of rotation of the motor corresponds to the direction of rotation commands (STF/STR) only if the phase sequence (U, V, W) is maintained.***

Trial run

CAUTION:

- ***Before starting operation, confirm and adjust the parameters. A failure to do so may cause some machines to make unexpected motions.***

Operation

WARNING:

- ***When you have chosen the retry function, stay away from the equipment as it will restart suddenly after an alarm stop.***
- ***Since pressing STOP/RESET key may not stop output depending on the function setting status, provide a circuit and switch separately to make an emergency stop (power off, mechanical brake operation for emergency stop, etc)***
- ***Make sure that the start signal is off before resetting the inverter alarm. A failure to do so may restart the motor suddenly.***
- ***The load used should be a three-phase induction motor only. Connection of any other electrical equipment to the inverter output may damage the equipment.***
- ***Do not modify the equipment.***
- ***Do not perform parts removal which is not instructed in this manual. Doing so may lead to fault or damage of the inverter.***

CAUTION:

- ***The electronic thermal relay function does not guarantee protection of the motor from overheating. It is recommended to install both an external thermal and PTC thermistor for overheat protection.***
- ***Do not use a magnetic contactor on the inverter input for frequent starting/stopping of the inverter. Otherwise, the life of the inverter decreases.***
- ***Use a noise filter to reduce the effect of electromagnetic interference and follow the accepted EMC procedures for proper installation of frequency inverters. Otherwise nearby electronic equipment may be affected.***
- ***Take appropriate measures regarding harmonics. Otherwise this can endanger compensation systems or overload generators.***
- ***Use a motor designed for inverter operation. (The stress for motor windings is bigger than in line power supply).***
- ***When parameter clear or all clear is performed, set again the required parameters before starting operations. Each parameter returns to the initial value.***
- ***The inverter can be easily set for high-speed operation. Before changing its setting, fully examine the performances of the motor and machine.***
- ***The DC braking function of the frequency inverter is not designed to continuously hold a load. Use an electro-mechanical holding brake on the motor for this purpose.***
- ***Before running an inverter which had been stored for a long period, always perform inspection and test operation.***
- ***For prevention of damage due to static electricity, touch nearby metal before touching this product to eliminate static electricity from your body.***

Emergency stop

CAUTION:

- ***Provide a safety backup such as an emergency brake which will prevent the machine and equipment from hazardous conditions if the inverter fails.***
- ***When the breaker on the inverter primary side trips, check for the wiring fault (short circuit), damage to internal parts of the inverter, etc. Identify the cause of the trip, then remove the cause and power on the breaker.***
- ***When the protective function is activated (i. e. the frequency inverter switches off with an error message), take the corresponding corrective action as described in the inverter manual, then reset the inverter, and resume operation.***

Maintenance, inspection and parts replacement

CAUTION:

- ***Do not carry out a megger (insulation resistance) test on the control circuit of the inverter. It will cause a failure.***

Disposing the inverter

CAUTION:

- ***Treat as industrial waste.***

General instructions

Many of the diagrams and drawings in instruction manuals show the inverter without a cover, or partially open. Never run the inverter in this status. Always replace the cover and follow this instruction manual when operating the inverter.

Typographic conventions

Use of notes

Notes containing important information are clearly identified as follows:

NOTE | Note text

Use of examples

Examples containing important information are clearly identified as follows:

Example ▽ Example text △

Numbering in figures and illustrations

Reference numbers in figures and illustrations are shown with white numbers in a black circle and the corresponding explanations shown beneath the illustrations are identified with the same numbers, like this:

❶ ❷ ❸ ❹

Procedures

In some cases the setup, operation, maintenance and other instructions are explained with numbered procedures, which must be performed in the exact order shown:

The individual steps of these procedures are numbered in ascending order with black numbers in a white circle.

① Text

② Text

③ Text

Footnotes in tables

Footnote characters in tables are printed in superscript and the corresponding footnotes shown beneath the table are identified by the same characters, also in superscript.

If a table contains more than one footnote, they are all listed below the table and numbered in ascending order with black numbers in a white circle, like this:

① Text
② Text
③ Text

Contents

1 Product checking and part identification

1.1 Inverter type 1-1

1.2 Description of the case 1-2

1.2.1 Accessory 1-3

2 Installation

2.1 Removal and reinstallation of the front cover 2-1

2.1.1 FR-D720S-008SC to 100SC and FR-D740-012SC to 080SC 2-1

2.1.2 FR-D740-120SC and FR-D740-160SC 2-2

2.2 Removal and reinstallation of the wiring cover 2-4

2.3 Mounting 2-5

2.4 Enclosure design 2-7

2.4.1 Inverter installation environment 2-7

2.4.2 Inverter placement 2-11

3 Wiring

3.1 Inverter and peripheral devices 3-1

3.1.1 Peripheral devices 3-3

3.2 Terminal connection diagram 3-4

3.3 Main circuit connection 3-6

3.3.1 Specification of main circuit terminal 3-6

3.3.2 Terminal layout and wiring 3-6

3.4 Control circuit specifications 3-13

3.4.1 Control circuit terminals 3-17

3.4.2 Wiring instructions 3-21

3.4.3 Safety stop function 3-22

3.4.4 Changing the control logic 3-27

3.5 PU connector 3-30
3.5.1 Connecting the parameter unit 3-30
3.5.2 RS485 communication 3-31

3.6 Connection of stand-alone option units 3-32
3.6.1 Magnetic contactors (MC) 3-32
3.6.2 Connection of a dedicated external brake resistor FR-ABR (FR-D720S-025SC or more, FR-D740-012SC or more) 3-34
3.6.3 Connection of a brake unit FR-BU2 3-37
3.6.4 Connection of the high power factor converter FR-HC 3-40
3.6.5 Connection of the power regeneration common converter FR-CV . . . 3-41
3.6.6 Connection of the power improving DC reactor FFR-HEL-(H)-E 3-42
3.6.7 Installation of a reactor 3-43

3.7 Electromagnetic compatibility (EMC) 3-44
3.7.1 Leakage currents and countermeasures. 3-44
3.7.2 Inverter-generated noises and their reduction techniques 3-48
3.7.3 Power supply harmonics 3-51
3.7.4 Inverter-driven 400V class motor 3-52

4 Operation

4.1 Precautions for use of the inverter 4-1
4.1.1 Failsafe of the system which uses the inverter 4-4

4.2 Drive the motor 4-7

4.3 Operation panel 4-8
4.3.1 Parts of the operation panel 4-8
4.3.2 Basic operation (factory setting) 4-10
4.3.3 Easy operation mode setting (easy setting mode) 4-11
4.3.4 Operation lock 4-13
4.3.5 Monitoring of output current and output voltage 4-15
4.3.6 First priority monitor 4-15
4.3.7 Digital dial push 4-15
4.3.8 Change the parameter setting value 4-16
4.3.9 Parameter clear/All Parameter clear 4-17
4.3.10 Initial value change list 4-18

5 Basic settings

5.1 Simple mode parameter list 5-1

5.1.1 Overheat protection of the motor by the inverter. 5-2

5.1.2 When the rated motor frequency is 60Hz (Pr. 3) 5-4

5.1.3 Increase the starting torque (Pr. 0) 5-5

5.1.4 Limit the maximum and minimum output frequency (Pr. 1, Pr. 2) 5-7

5.1.5 Change the acceleration/deceleration time (Pr. 7, Pr. 8) 5-9

5.1.6 Operation mode selection (Pr. 79) 5-11

5.1.7 Large starting torque and low speed torque are necessary (General-purpose magnetic flux vector control) (Pr. 9, Pr. 71, Pr. 80) 5-12

5.1.8 To exhibit the best performance of the motor performance (offline auto tuning) (Pr. 9, Pr. 71, Pr. 80, Pr. 82 to Pr. 84, Pr. 90, Pr. 96) 5-14

5.2 PU operation mode. 5-21

5.2.1 Set the set frequency to operate 5-22

5.2.2 Use the digital dial like a potentiometer to perform operation 5-24

5.2.3 Use switches to give the frequency command (multi-speed setting) . 5-25

5.2.4 Perform frequency setting by analog voltage input 5-27

5.2.5 Perform frequency setting by analog current input 5-29

5.3 External operation 5-31

5.3.1 Use the set frequency set by PU (Pr. 79 = 3) 5-31

5.3.2 Use switches to give a start command and a frequency command (multi-speed setting) (Pr. 4 to Pr. 6) 5-33

5.3.3 Perform frequency setting by analog voltage input 5-36

5.3.4 Change the frequency (40Hz) of the maximum value of potentiometer (at 5V) 5-39

5.3.5 Perform frequency setting by analog current input 5-40

5.3.6 Change the frequency (40Hz) of the maximum value of potentiometer (at 20mA) 5-42

6 Parameter

6.1 Parameter overview 6-1

6.2 Adjust the output torque (current) of the motor. 6-26

6.2.1 Manual torque boost (Pr. 0, Pr. 46) 6-26

6.2.2 General-purpose magnetic flux vector control (Pr. 9, Pr. 71, Pr. 80) 6-29

6.2.3 Slip compensation (Pr. 245 to Pr. 247) 6-32

6.2.4 Stall prevention operation (Pr. 22, Pr. 23, Pr. 48, Pr. 66, Pr. 156, Pr. 157) 6-33

6.3 Limit the output frequency 6-40

6.3.1 Maximum and minimum frequency (Pr. 1, Pr. 2, Pr. 18) 6-40

6.3.2 Avoid mechanical resonance points (frequency jumps) (Pr. 31 to Pr. 36) 6-42

6.4 Set V/f pattern. 6-44

6.4.1 Base frequency, voltage (Pr. 3, Pr. 19, Pr. 47) 6-44

6.4.2 Load pattern selection (Pr. 14) 6-46

6.5 Frequency setting by external terminals. 6-48

6.5.1 Multi-speed setting operation (Pr. 4 to Pr. 6, Pr. 24 to Pr. 27, Pr. 232 to Pr. 239) 6-48

6.5.2 Jog operation (Pr. 15, Pr. 16) 6-51

6.5.3 Remote setting function (Pr. 59) 6-55

6.6 Acceleration and deceleration 6-59

6.6.1 Acceleration and deceleration time (Pr. 7, Pr. 8, Pr. 20, Pr. 44, Pr. 45) 6-59

6.6.2 Starting frequency and start-time hold function. 6-62

6.6.3 Acceleration and deceleration pattern (Pr. 29) 6-64

6.7 Selection and protection of a motor 6-66

6.7.1 Motor overheat protection (Electronic thermal O/L relay) (Pr. 9, Pr. 51, Pr. 561) 6-66

6.7.2 Applied motor (Pr. 71, Pr. 450) 6-72

6.7.3 To exhibit the best performance of the motor performance (offline auto tuning) (Pr. 71, Pr. 80, Pr. 82 to Pr. 84, Pr. 90, Pr. 96) 6-74

6.8 Motor brake and stop operation 6-81

6.8.1 DC injection brake (Pr. 10 to Pr. 12) 6-81

6.8.2 Selection of a regenerative brake (Pr. 30, Pr. 70) 6-84

6.8.3 Stop selection (Pr. 250). 6-86

6.9 Function assignment of external terminals 6-88
6.9.1 Input terminal function selection (Pr. 178 to Pr. 182) 6-88
6.9.2 Inverter output shutoff signal (MRS signal, Pr. 17) 6-91
6.9.3 Condition selection of function validity by second function selection signal (RT, Pr. 155) 6-93
6.9.4 Start signal selection (Terminal STF, STR, STOP, Pr. 250) 6-94
6.9.5 Output terminal function selection (Pr. 190, Pr. 192, Pr. 197). 6-98
6.9.6 Detection of output frequency (SU, FU, Pr. 41 to Pr. 43) 6-103
6.9.7 Output current detection function (Y12, Y13, Pr. 150 to Pr. 153, Pr. 166, Pr. 167) 6-105
6.9.8 Remote output function (REM, Pr. 495, Pr. 496) 6-107

6.10 Monitor display and monitor output signals 6-109
6.10.1 Speed display and speed setting (Pr. 37) 6-109
6.10.2 Monitor display selection of DU/PU and terminal AM (Pr. 52, Pr. 158, Pr. 170, Pr. 171, Pr. 268, Pr. 563, Pr. 564, Pr. 891) 6-111
6.10.3 Reference of the terminal AM (analog voltage output) (Pr. 55, Pr. 56). 6-118
6.10.4 Terminal AM calibration [C1 (Pr.901)]. 6-120

6.11 Operation selection at power failure . . . . . Pr. 165, Pr. 298, Pr. 299, Pr. 611) 6-123
6.11.1 Power failure-time deceleration-to-stop function (Pr. 261) 6-134

6.12 Operation setting at alarm occurrence 6-138
6.12.1 Retry function (Pr. 65, Pr. 67 to Pr. 69). 6-138
6.12.2 Input/output phase failure protection selection (Pr. 251, Pr. 872) . . . 6-141
6.12.3 Earth (ground) fault detection at start (Pr. 249). 6-142

6.13 Energy saving operation. 6-143
6.13.1 Optimum excitation control (Pr. 60) 6-143

6.14 Motor noise, EMI measures, mechanical resonance 6-144
6.14.1 PWM carrier frequency and soft-PWM control (Pr. 72, Pr. 240, Pr. 260) 6-144
6.14.2 Speed smoothing control (Pr. 653) 6-146

6.15 Frequency setting by analog input (terminal 2, 4) 6-147
6.15.1 Analog input selection (Pr. 73, Pr. 267) 6-147
6.15.2 Input filter time constant (Pr. 74) 6-152
6.15.3 Bias and gain of frequency setting voltage (current) [Pr. 125, Pr. 126, Pr. 241, C2 (Pr. 902) to C7 (Pr. 905)] 6-153

6.16 Misoperation prevention and parameter setting restriction. 6-160

6.16.1 Reset selection/disconnected PU detection/PU stop selection (Pr. 75) 6-160

6.16.2 Parameter write selection (Pr. 77). 6-165

6.16.3 Reverse rotation prevention selection (Pr. 78) 6-167

6.16.4 Extended parameter display (Pr. 160) 6-168

6.16.5 Password function (Pr. 296, Pr. 297) 6-169

6.17 Selection of operation mode and operation location 6-172

6.17.1 Operation mode selection (Pr. 79) 6-172

6.17.2 Operation mode at power on (Pr. 79, Pr. 340) 6-184

6.17.3 Start command source and frequency command source during communication operation (Pr. 338, Pr. 339, Pr. 551) 6-186

6.18 Communication operation and settings 6-193

6.18.1 PU connector 6-193

6.18.2 Initial settings and specifications of RS485 communication (Pr. 117 to Pr. 120, Pr. 123, Pr. 124, Pr. 549). 6-198

6.18.3 Operation selection at communication error occurrence (Pr. 121, Pr. 122, Pr. 502)6-199

6.18.4 Communication E²PROM write selection (Pr. 342) 6-204

6.18.5 Mitsubishi inverter protocol (computer link communication) 6-205

6.18.6 Modbus-RTU communication (Pr. 117, Pr. 118, Pr. 120, Pr. 122, Pr. 343, Pr. 549) 6-224

6.19 Special operation 6-242

6.19.1 PID control (Pr. 127 to Pr. 134, Pr. 575 to Pr. 577). 6-242

6.19.2 Dancer control (Pr. 44, Pr. 45, Pr. 128 to Pr. 134) 6-255

6.19.3 Traverse function (Pr. 592 to Pr. 597). 6-264

6.19.4 Regeneration avoidance function (Pr. 665, Pr. 882, Pr. 883, Pr. 885, Pr. 886) 6-267

6.20 Useful functions 6-270

6.20.1 Cooling fan operation selection (Pr. 244) 6-270

6.20.2 Display of the life of the inverter parts (Pr. 255 to Pr. 259) 6-271

6.20.3 Maintenance timer alarm (Pr. 503, Pr. 504) 6-276

6.20.4 Current average value monitor signal (Pr. 555 to Pr. 557) 6-277

6.20.5 Free parameters (Pr. 888, Pr. 889). 6-281

6.21 Setting for the parameter unit and operation panel 6-282
6.21.1 RUN key rotation direction selection (Pr. 40) 6-282
6.21.2 PU display language selection (Pr. 145) 6-282
6.21.3 Operation panel frequency setting/key lock operation selection (Pr. 161) 6-283
6.21.4 Magnitude of frequency change setting (Pr. 295) 6-284
6.21.5 Buzzer control (Pr. 990) 6-285
6.21.6 PU contrast adjustment (Pr. 991) 6-285

7 Troubleshooting

7.1 List of alarm display 7-2
7.2 Causes and corrective actions 7-4
7.3 Reset method of protective function 7-17
7.4 LED display 7-18
7.5 Check and clear of the fault history 7-19
7.6 Check first when you have troubles 7-21
7.6.1 Motor does not start 7-21
7.6.2 Motor or machine generates abnormal noise 7-23
7.6.3 Inverter generates abnormal noise 7-23
7.6.4 Motor generates heat abnormally 7-24
7.6.5 Motor rotates in opposite direction 7-24
7.6.6 Speed greatly differs from the setting 7-24
7.6.7 Acceleration/deceleration is not smooth 7-25
7.6.8 Speed varies during operation 7-26
7.6.9 Operation mode is not changed properly 7-27
7.6.10 Operation panel display is not operating 7-27
7.6.11 Motor current is too large 7-28
7.6.12 Speed does not accelerate 7-29
7.6.13 Unable to write parameter setting 7-30
7.7 Meters and measuring methods 7-31
7.7.1 Measurement of powers 7-32
7.7.2 Measurement of voltages and use of PT 7-33
7.7.3 Measurement of currents 7-33
7.7.4 Use of CT and transducer 7-34
7.7.5 Measurement of inverter input power factor 7-34
7.7.6 Measurement of converter output voltage (across terminals P/+ and N/–) 7-34

8 Maintenance and inspection

8.1 Inspection 8-1
8.1.1 Daily inspection 8-1
8.1.2 Periodic inspection 8-1
8.1.3 Daily and periodic inspection 8-2
8.1.4 Display of the life of the inverter parts 8-4
8.1.5 Checking the inverter and converter modules 8-5
8.1.6 Cleaning 8-6
8.1.7 Replacement of parts 8-6

8.2 Measurements on the main circuit 8-10
8.2.1 Insulation resistance test using megger 8-10
8.2.2 Pressure test 8-10
8.2.3 Measurement of voltages and currents 8-11

A Appendix

A.1 Specifications A-1
A.1.1 1-phase, 200V class A-1
8.2.4 3-phase, 400V class A-2
A.2 Common specifications A-3
A.3 Outline dimension drawings A-5
A.3.1 FR-D720S-008SC to 042SC A-5
A.3.2 FR-D720S-070SC and FR-D740-012SC to 080SC A-6
A.3.3 FR-D720S-100SC A-7
A.3.4 FR-D740-120SC and 160SC A-8
A.3.5 Parameter unit FR-PU07 . . . . . A-9
A.3.6 Parameter unit FR-PA07 . . . . . A-10
A.4 Parameter list with instruction codes A-11
A.5 Specification change A-19
A.5.1 SERIAL number check A-19

1 Product checking and part identification

Unpack the inverter and check the capacity plate on the front cover and the rating plate on the inverter side face to ensure that the product agrees with your order and the inverter is intact.

1.1 Inverter type

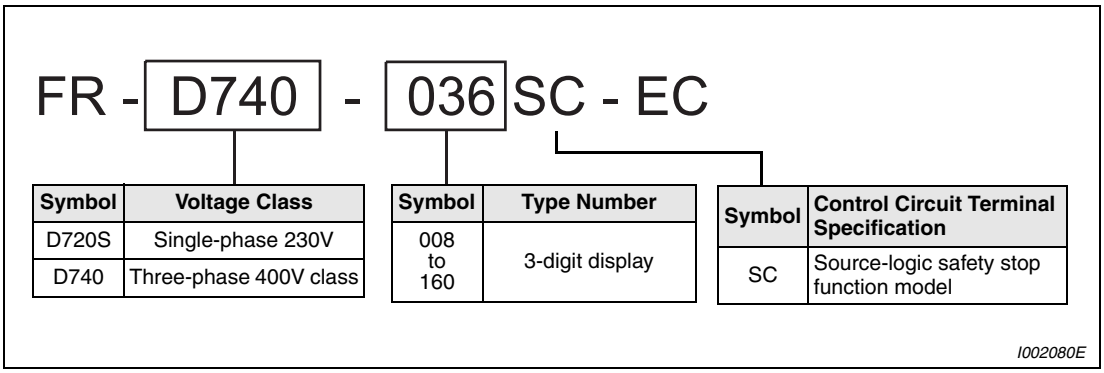

Fig. 1-1: *Inverter type FR-D700 SC EC*

1.2 Description of the case

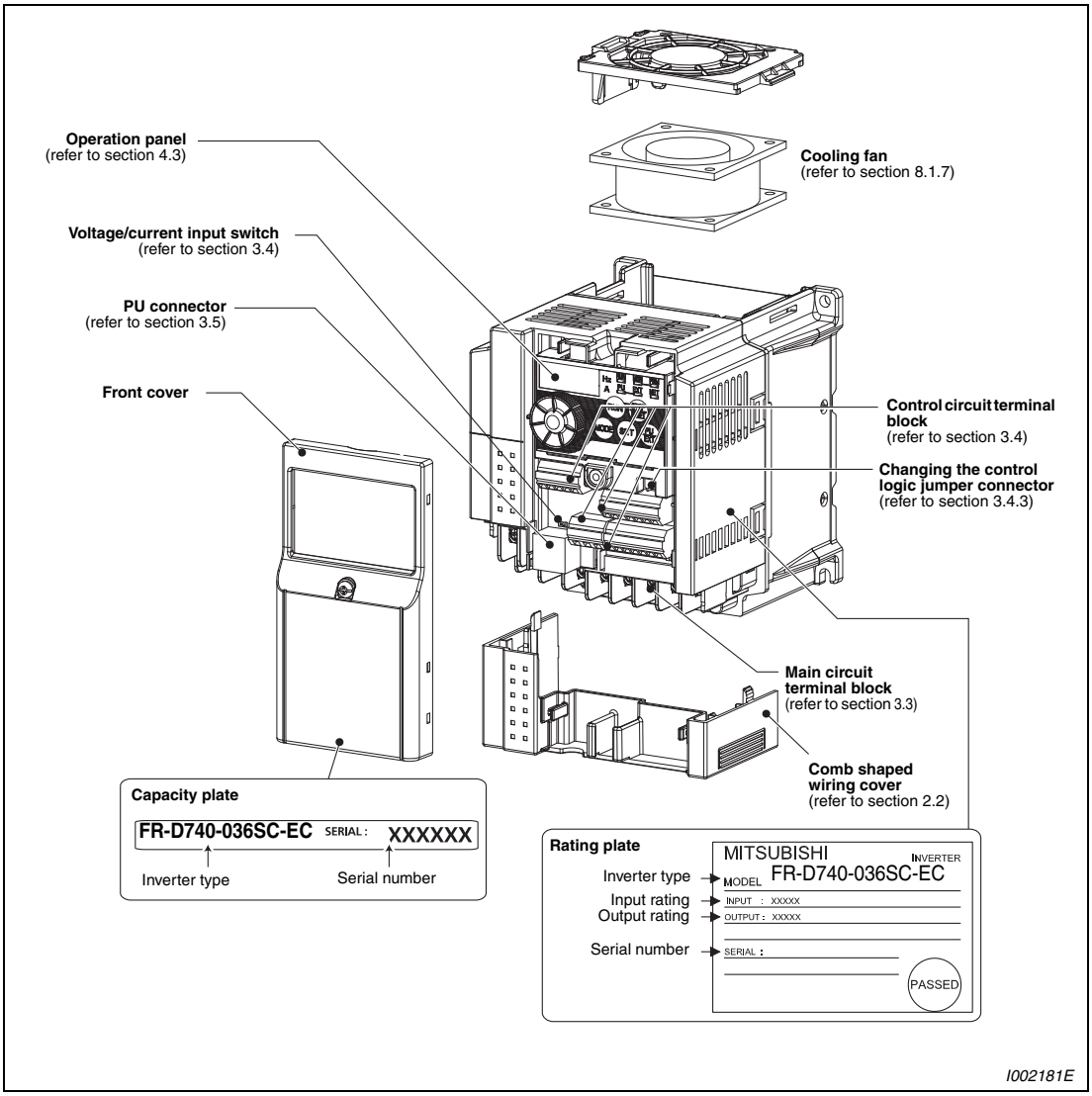

Fig. 1-2: *Appearance and structure*

NOTE For removal and reinstallation of covers, refer to section 2.1.

1.2.1 Accessory

Fan cover fixing screws

Capacity	Screw Size [mm]	Number
FR-D720S-070SC and 100SC	M3 × 35	1
FR-D740-036SC to 080SC	M3 × 35	1
FR-D740-120SC and 160SC	M3 × 35	2

Tab. 1-1: *Fan cover fixing screws*

NOTES

Inverters FR-D720S-008SC to 042SC and FR-D740-022SC or less are not provided with the cooling fan. Therefore the fan cover fixing screws are not delivered with these models.

For removal and reinstallation of the cooling fans, refer to section 8.1.7.

2 Installation

2.1 Removal and reinstallation of the front cover

2.1.1 FR-D720S-008SC to 100SC and FR-D740-012SC to 080SC

Removal of the front cover

① Loosen the installation screw of the front cover. (This screw cannot be removed.)

② Remove the front cover by pulling it like the direction of arrow.

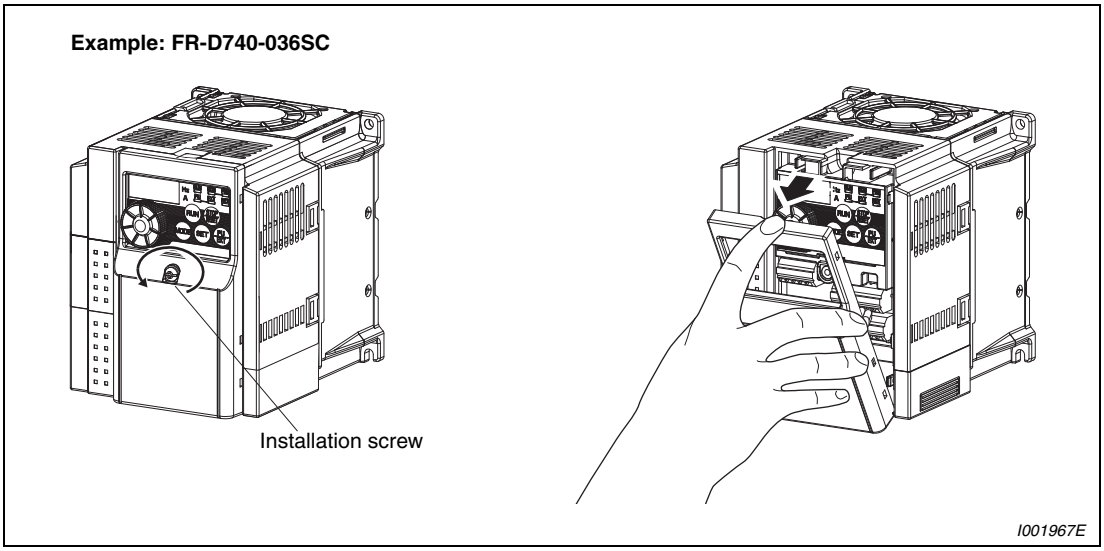

Fig. 2-1: *Removal of the front cover*

Reinstallation

① To reinstall, match the cover to the inverter front and install it straight.

② Tighten the installation screw.

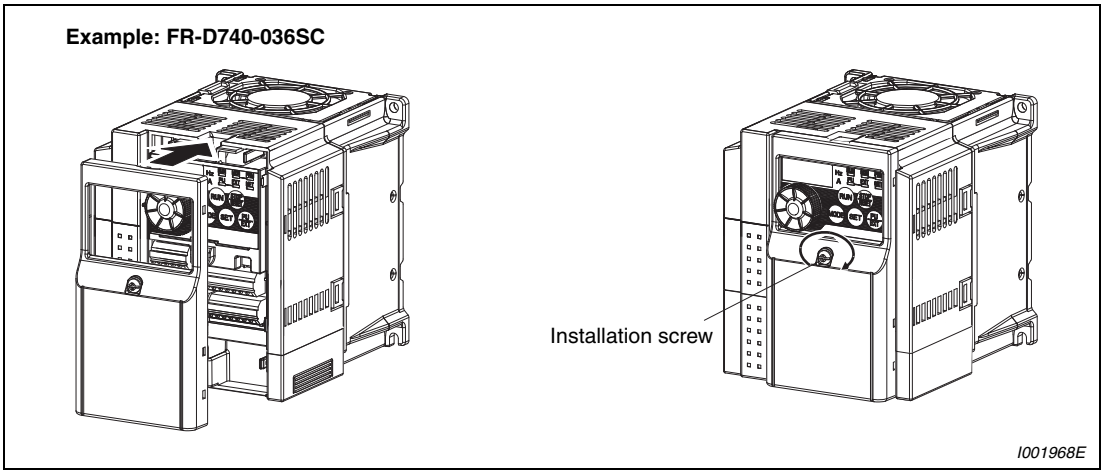

Fig. 2-2: *Reinstallation of the front cover*

2.1.2 FR-D740-120SC and FR-D740-160SC

Removal of the front cover

① Loosen the installation screws of the front cover. (The screws cannot be removed.)

② Remove the front cover by pulling it like the direction of arrow with holding the installation hook on the front cover.

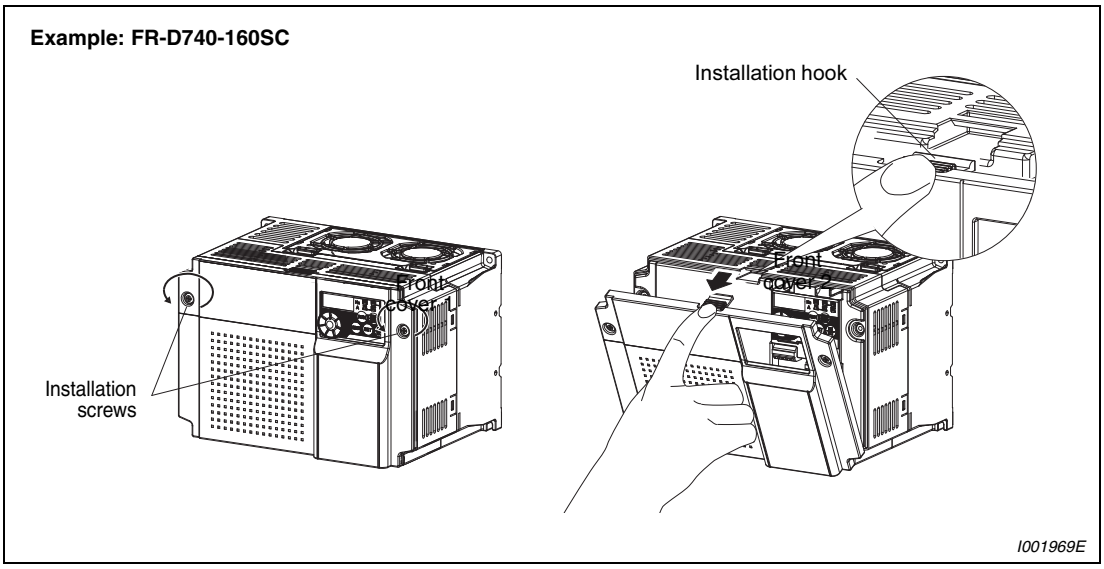

Fig. 2-3: *Removal of the front cover*

Reinstallation of the front cover

① Insert the two fixed hooks on the lower side of the front cover into the sockets of the inverter. Then press the cover against the device until it correctly locks on.

② Tighten the installation screws.

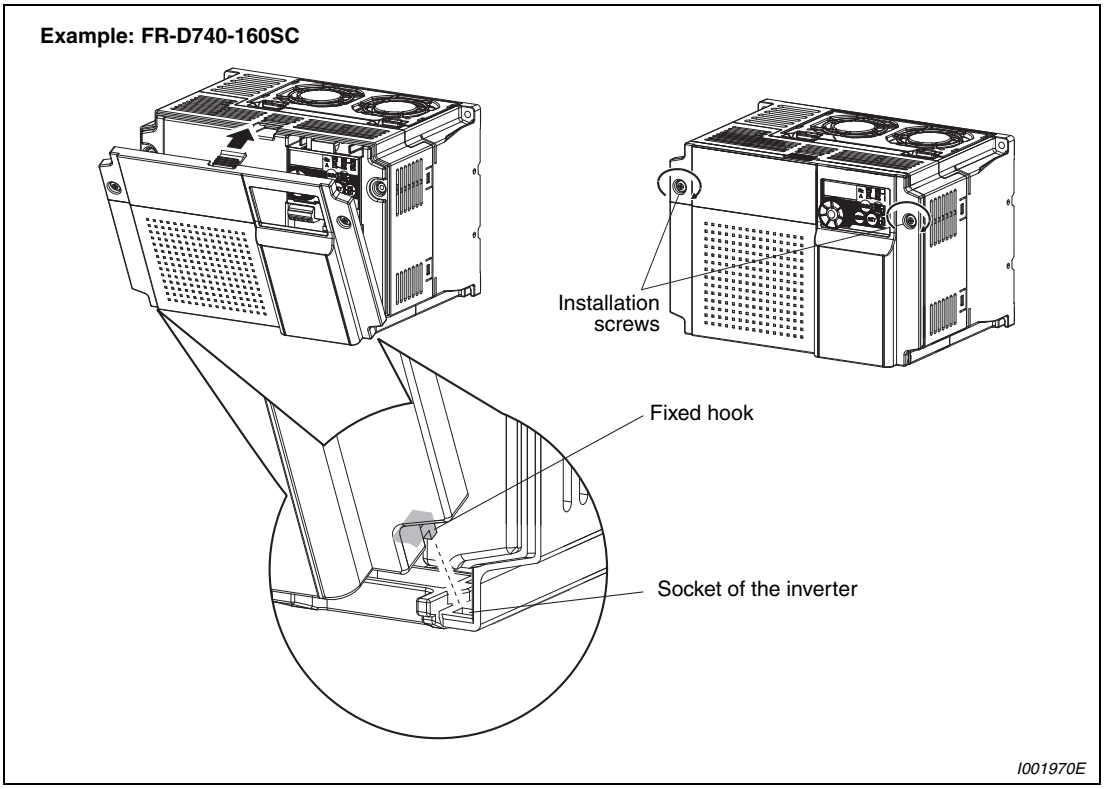

Fig. 2-4: *Reinstallation of the front cover*

NOTES

Fully make sure that the front cover has been reinstalled securely. Always tighten the installation screws of the front cover.

The same serial number is printed on the capacity plate of the front cover and the rating plate of the inverter. Before reinstalling the front cover, check the serial numbers to ensure that the cover removed is reinstalled to the inverter from where it was removed.

2.2 Removal and reinstallation of the wiring cover

The cover can be removed easily by pulling it downward (FR-D720S-008SC to 100SC and FR-D740-012SC to 080SC) or toward you (FR-D740-120SC and 160SC).

To reinstall, fit the cover to the inverter along the guides.

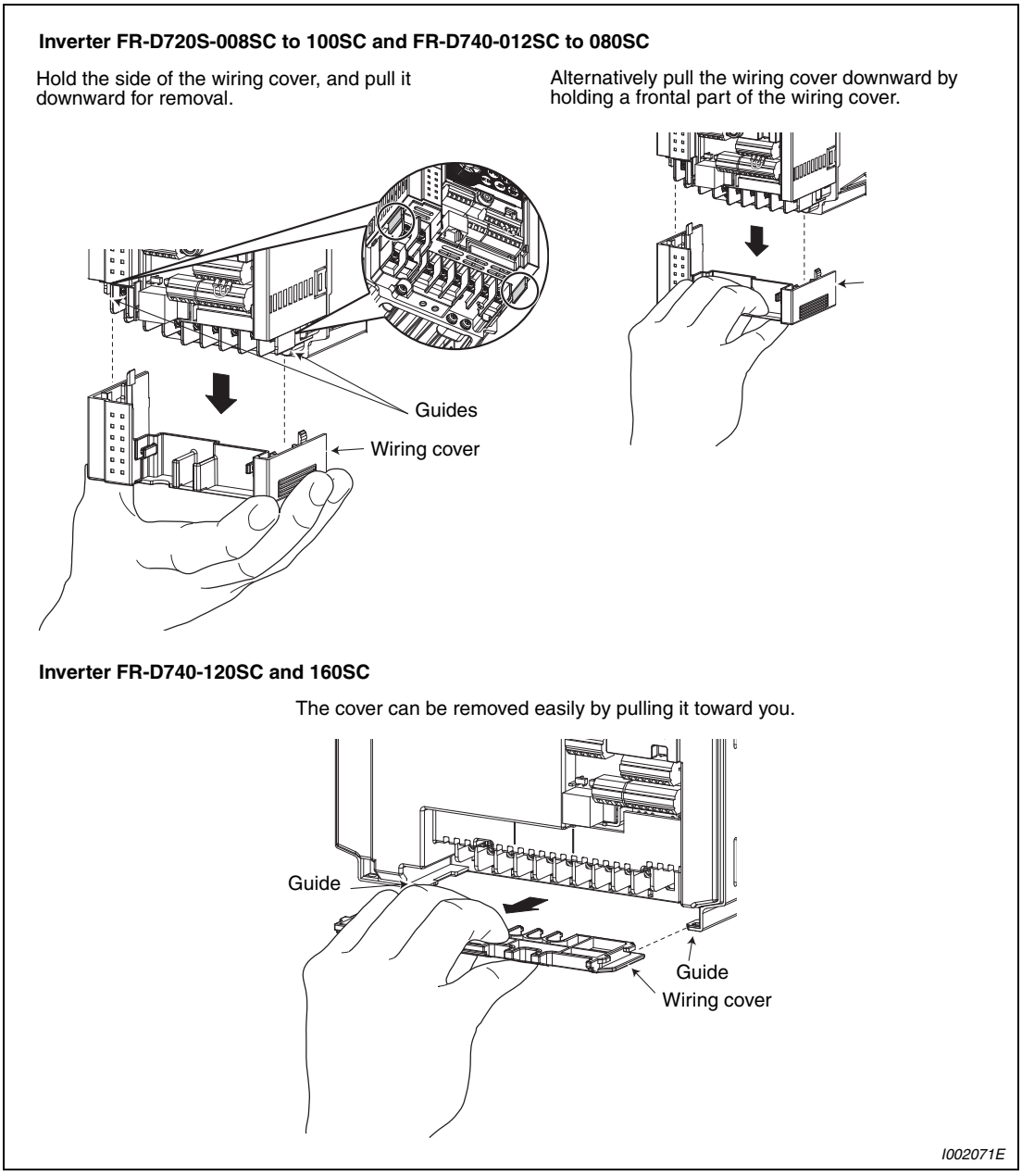

Fig. 2-5: *Examples for removing the wiring cover*

2.3 Mounting

NOTE Install the inverter vertically. Do not mount it horizontally or any other way.

Remove the front cover and wiring cover to fix the inverter to the surface.

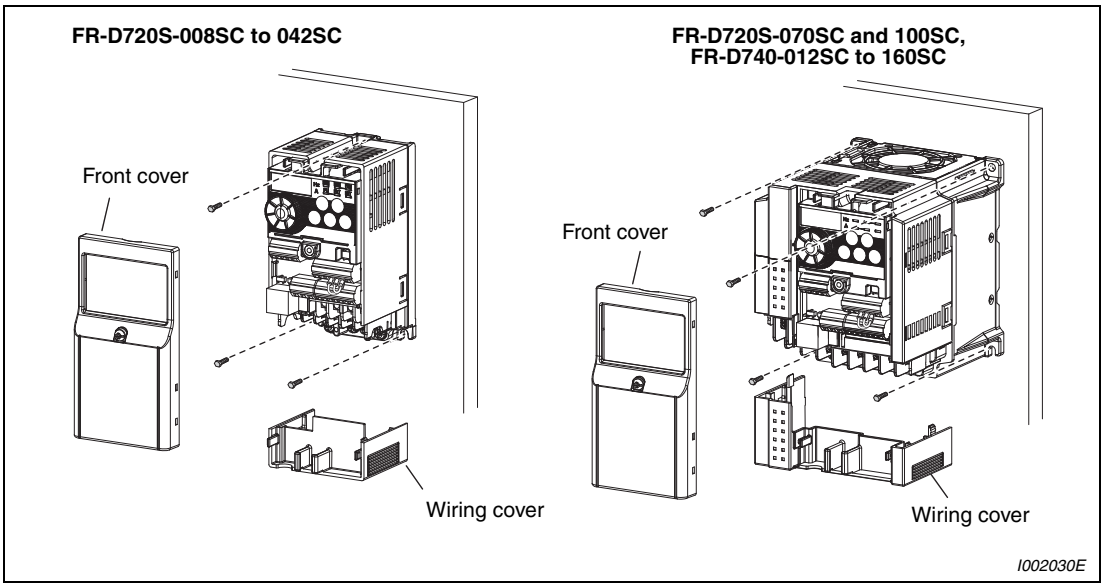

Fig. 2-6: *Installation on the panel*

NOTE When encasing multiple inverters, install them in parallel as a cooling measure. Leave enough clearances around the inverter (refer to page 2-11).

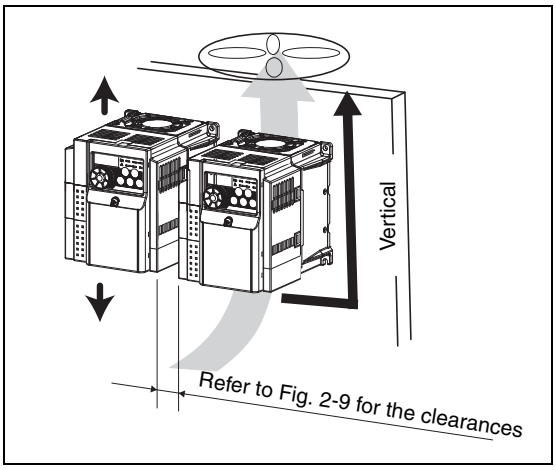

Fig. 2-7:
Good heat dissipation is achieved through the vertical alignment of the frequency inverter, the side-by-side mounting and maintenance of minimum clearances.

The inverter consists of precision mechanical and electronic parts. Never install or handle it in any of the following conditions as doing so could cause an operation fault or failure.

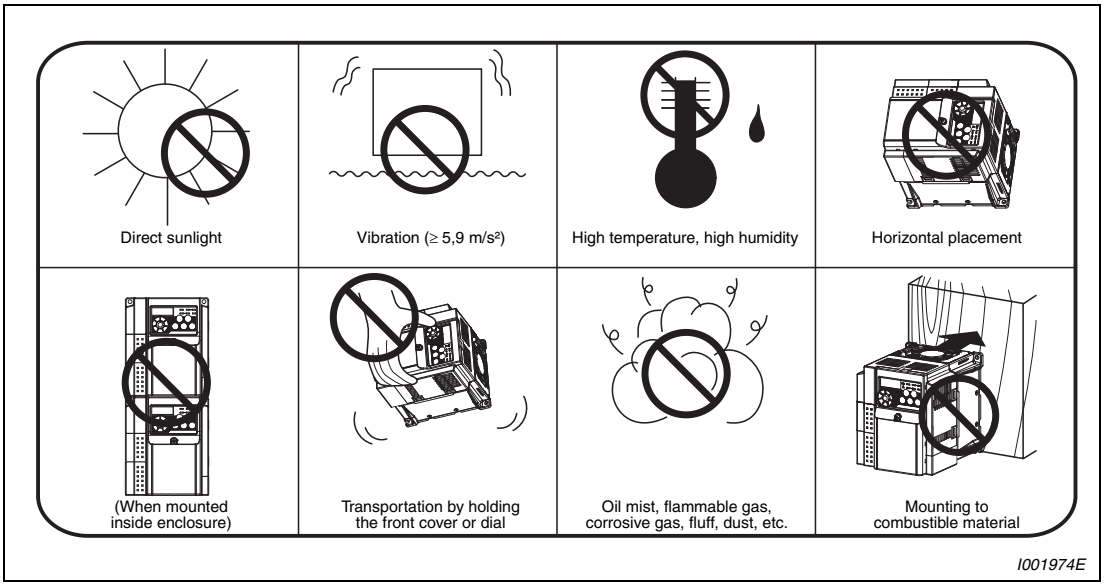

Fig. 2-8: *Conditions, that could cause an operation fault or failure*

2.4 Enclosure design

When an inverter enclosure is to be designed and manufactured, heat generated by contained equipment, etc., the environment of an operating place, and others must be fully considered to determine the enclosure structure, size and equipment layout.

The inverter unit uses many semiconductor devices. To ensure higher reliability and long period of operation, operate the inverter in the ambient environment that completely satisfies the equipment specifications.

2.4.1 Inverter installation environment

As the inverter installation environment should satisfy the standard specifications indicated in the following table, operation in any place that does not meet these conditions not only deteriorates the performance and life of the inverter, but also causes a failure. Refer to the following points and take adequate measures.

Item	Specification
Ambient temperature	−10°C to +50°C (non-freezing)
Ambient humidity	90% RH or less (non-condensing)
Atmosphere	Free from corrosive and explosive gases, dust and dirt
Maximum altitude	1000m or less
Vibration	5.9m/s^2 or less (0,6 g) at 10 to 55Hz (directions of X, Y, Z axes)

Tab. 2-1: *Environmental standard specifications of inverter*

Temperature

The permissible ambient temperature of the inverter FR-D700 SC is between −10 and +50°C. Always operate the inverter within this temperature range. Operation outside this range will considerably shorten the service lives of the semiconductors, parts, capacitors and others. Take the following measures so that the ambient temperature of the inverter falls within the specified range.

- Measures against high temperature
  - Use a forced ventilation system or similar cooling system. (Refer to page 2-10.)
  - Install the enclosure in an air-conditioned electrical chamber.
  - Block direct sunlight.
  - Provide a shield or similar plate to avoid direct exposure to the radiated heat and wind of a heat source.
  - Ventilate the area around the enclosure well.
- Measures against low temperature
  - Provide a space heater in the enclosure.
  - Do not power off the inverter. (Keep the start signal of the inverter off.)
- Sudden temperature changes
  - Select an installation place where temperature does not change suddenly.
  - Avoid installing the inverter near the air outlet of an air conditioner.
  - If temperature changes are caused by opening/closing of a door, install the inverter away from the door.

Humidity

Normally operate the inverter within the 45% to 90% range of the ambient humidity. Too high humidity will pose problems of reduced insulation and metal corrosion. On the other hand, too low humidity may produce a spatial electrical breakdown. The insulation distance specified in JEM1103 "Control Equipment Insulator" is defined as humidity 45% to 85%.

- Measures against high humidity
  - Make the enclosure enclosed, and provide it with a hygroscopic agent.
  - Take dry air into the enclosure from outside.
  - Provide a space heater in the enclosure
- Measures against low humidity

  What is important in fitting or inspection of the unit in this status is to discharge your body (static electricity) beforehand and keep your body from contact with the parts and patterns, besides blowing air of proper humidity into the enclosure from outside.
- Measures against condensation

  Condensation may occur if frequent operation stops change the in-enclosure temperature suddenly or if the outside air temperature changes suddenly. Condensation causes such faults as reduced insulation and corrosion.
  - Take the measures against high humidity.
  - Do not power off the inverter. (Keep the start signal of the inverter off.)

Dust, dirt, oil mist

Dust and dirt will cause such faults as poor contact of contact points, reduced insulation or reduced cooling effect due to moisture absorption of accumulated dust and dirt, and in-enclosure temperature rise due to clogged filter.

In the atmosphere where conductive powder floats, dust and dirt will cause such faults as malfunction, deteriorated insulation and short circuit in a short time. Since oil mist will cause similar conditions, it is necessary to take adequate measures.

- Measures against dust, dirt, oil mist
  - Place in a totally enclosed enclosure.
    Take measures if the in-enclosure temperature rises. (Refer to page 2-10.)
  - Purge air.
    Pump clean air from outside to make the in-enclosure pressure higher than the outside-air pressure.

Corrosive gas, salt damage

If the inverter is exposed to corrosive gas or to salt near a beach, the printed board patterns and parts will corrode or the relays and switches will result in poor contact. In such places, take the measures against dust, dirt, oil mist.

Explosive, flammable gases

As the inverter is non-explosion proof, it must be contained in an explosion proof enclosure.
In places where explosion may be caused by explosive gas, dust or dirt, an enclosure cannot be used unless it structurally complies with the guidelines and has passed the specified tests. This makes the enclosure itself expensive (including the test charges).
The best way is to avoid installation in such places and install the inverter in a non-hazardous place.

Highland

Use the inverter at the altitude of within 1000m.
If it is used at a higher place, it is likely that thin air will reduce the cooling effect and low air pressure will deteriorate dielectric strength.
Maximum 1000m above sea level for standard operation. After that derate by 3% for every extra 500m up to 2500m (91%).

Vibration, impact

The vibration resistance of the inverter is up to 5.9m/s^2 at 10 to 55Hz frequency and 1mm amplitude for the directions of X, Y, Z axes.

Vibration or impact, if less than the specified value, applied for a long time may make the mechanism loose or cause poor contact to the connectors. Especially when impact is imposed repeatedly, caution must be taken as the part pins are likely to break.

- Countermeasures
  - Provide the enclosure with rubber vibration isolators.
  - Strengthen the structure to prevent the enclosure from resonance.
  - Install the enclosure away from sources of vibration.

Cooling system types for inverter enclosure

From the enclosure that contains the inverter, the heat of the inverter and other equipment (transformers, lamps, resistors, etc.) and the incoming heat such as direct sunlight must be dissipated to keep the in-enclosure temperature lower than the permissible temperatures of the in-enclosure equipment including the inverter.
The cooling systems are classified as follows in terms of the cooling calculation method.

- Cooling by natural heat dissipation from the enclosure surface (Totally enclosed type)
- Cooling by heat sink (Aluminium fin, etc.)
- Cooling by ventilation (Forced ventilation type, pipe ventilation type)
- Cooling by heat exchanger or cooler (Heat pipe, cooler, etc.)

Cooling System		Enclosure Structure	Comment
Natural cooling	Natural ventilation (Enclosed, open type)	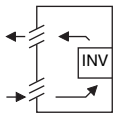 I001000E	Low in cost and generally used, but the enclosure size increases as the inverter capacity increases. For relatively small capacities.
	Natural ventilation (Totally enclosed type)	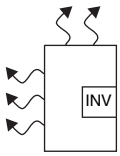 I001001E	Being a totally enclosed type, the most appropriate for hostile environment having dust, dirt, oil mist, etc. The enclosure size increases depending on the inverter capacity.
Forced cooling	Heatsink cooling	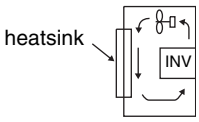 I001002E	Having restrictions on the heatsink mounting position and area, and designed for relative small capacities.
	Forced ventilation	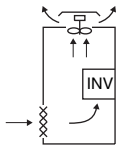 I001003E	For general indoor installation. Appropriate for enclosure downsizing and cost reduction, and often used.
	Heat pipe	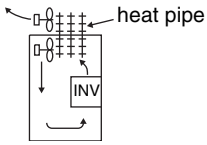 I001004E	Totally enclosed type for enclosure downsizing.

Tab. 2-2: *Cooling system types for inverter enclosure ("INV" in in the figures stands for "inverter")*

2.4.2 Inverter placement

Clearances around the inverter

Always observe the specified minimum clearances to ensure good heat dissipation and adequate accessibility of the frequency inverter for servicing.

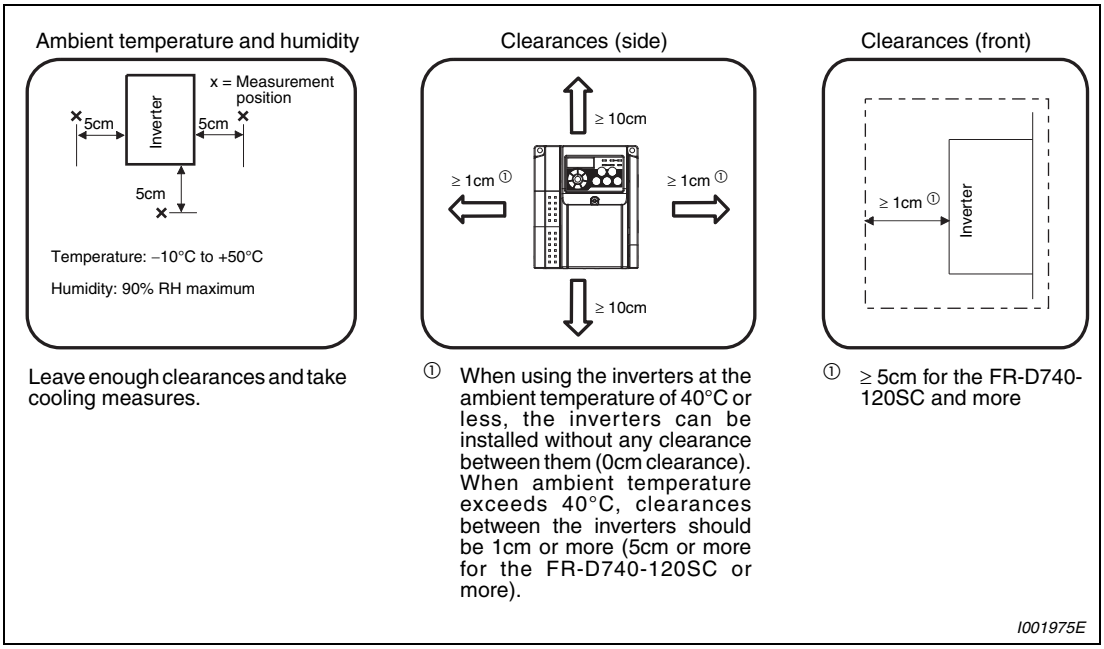

Fig. 2-9: *Clearances*

Inverter mounting orientation

Mount the inverter on a wall as specified. Do not mount it horizontally or any other way.

Above the inverter

Heat is blown up from inside the inverter by the small fan built in the unit. Any equipment placed above the inverter should be heat resistant.

Arrangement of multiple inverters

When multiple inverters are placed in the same enclosure, generally arrange them horizontally as shown in the figure (a). When it is inevitable to arrange them vertically to minimize space, take such measures as to provide guides since heat from the bottom inverters can increase the temperatures in the top inverters, causing inverter failures.

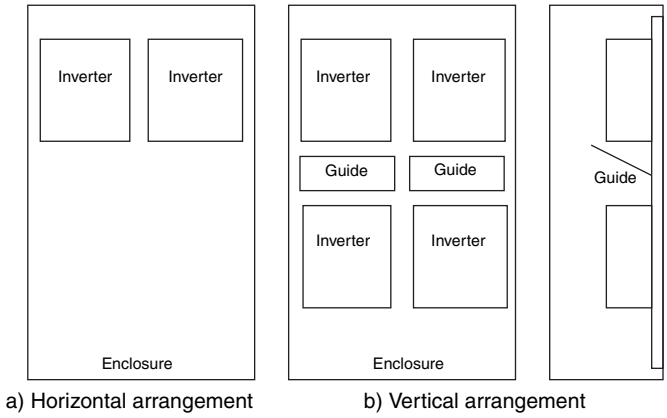

Fig. 2-10: *Arrangement of multiple inverters*

NOTE

When mounting multiple inverters, fully take caution not to make the ambient temperature of the inverter higher than the permissible value by providing ventilation and increasing the enclosure size.

Placement of ventilation fan and inverter

Heat generated in the inverter is blown up from the bottom of the unit as warm air by the cooling fan. When installing a ventilation fan for that heat, determine the place of ventilation fan installation after fully considering an air flow. (Air passes through areas of low resistance. Make an airway and airflow plates to expose the inverter to cool air.)

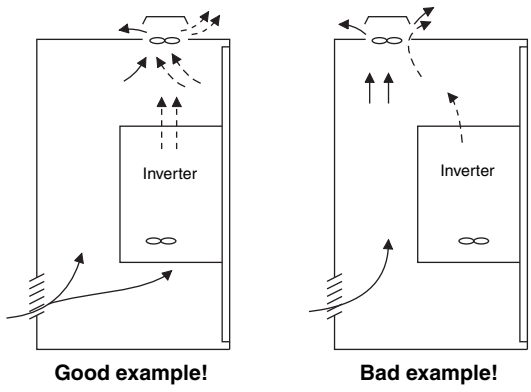

Fig. 2-11: *Placement of ventilation fan and inverter*

3 Wiring

3.1 Inverter and peripheral devices

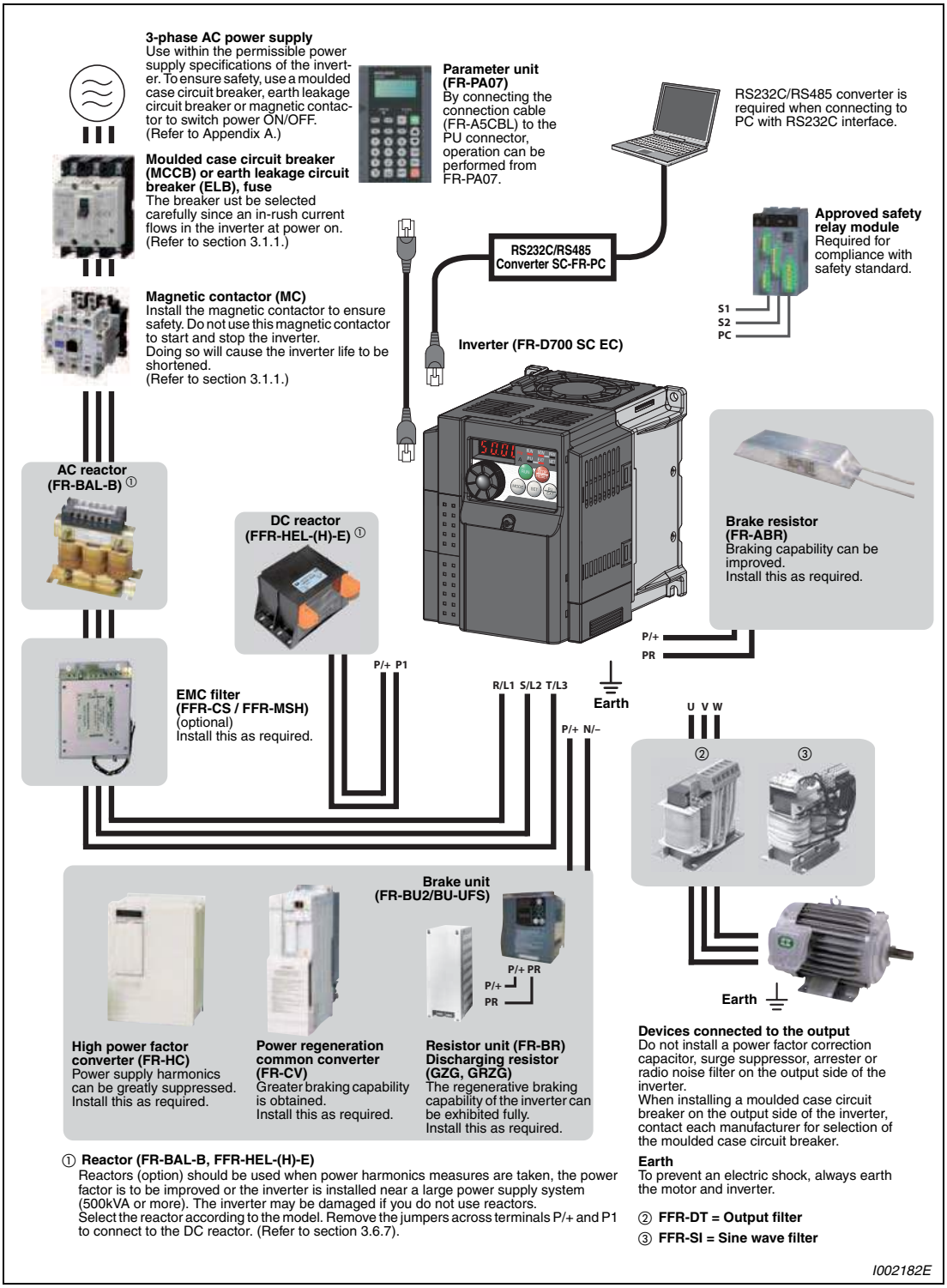

Fig. 3-1: *System configuration overview*

NOTES

The life of the inverter is influenced by surrounding air temperature. The surrounding air temperature should be as low as possible within the permissible range. This must be noted especially when the inverter is installed in an enclosure (refer to section 2.4.2).

Wrong wiring might lead to damage of the inverter. The control signal lines must be kept fully away from the main circuit to protect them from noise (refer to section 3.2).

Do not install a power factor correction capacitor or surge suppressor on the inverter output side. This will cause the inverter to trip or the capacitor and surge suppressor to be damaged. If any of the above devices are connected, immediately remove them.

Electromagnetic Compatibility
Operation of the frequency inverter can cause electromagnetic interference in the input and output that can be propagated by cable (via the power input lines), by wireless radiation to nearby equipment (e.g. AM radios) or via data and signal lines.
Activate the integrated EMC filter (and an additional optional filter if present) to reduce air propagated interference on the input side of the inverter. Use AC or DC reactors to reduce line propagated noise (harmonics). Use shielded motor power lines to reduce output noise (refer also to section 3.7 Electromagnetic Compatibility).

Refer to the instruction manual of each option and peripheral devices for details of peripheral devices.

3.1.1 Peripheral devices

Check the motor capacity of the inverter you purchased. Appropriate peripheral devices must be selected according to the capacity. Refer to the following list and prepare appropriate peripheral devices:

Motor Output [kW]		Applicable Inverter Type	Breaker Selection ①		Input Side Magnetic Contactor ②	
			Reactor Connection		Reactor Connection	
			Without	With	Without	With
200V class	0.1	FR-D720S-008SC	NF32 xx 3P 6 A		S-N10	
	0.2	FR-D720S-014SC				
	0.4	FR-D720S-025SC	NF32 xx 3P 10 A	NF32 xx 3P 6 A		
	0.75	FR-D720S-042SC	NF32 xx 3P 16 A	NF32 xx 3P 10 A		
	1.5	FR-D720S-070SC	NF32 xx 3P 32 A	NF32 xx 3P 16 A		
	2.2	FR-D720S-100SC	NF32 xx 3P 40 A	NF32 xx 3P 32 A	S-N20,S-N21	S-N10
400V class	0.4	FR-D740-012SC	NF32 xx 3P 6 A		S-N10	
	0.75	FR-D740-022SC				
	1.5	FR-D740-036SC	NF32 xx 3P 10 A			
	2.2	FR-D740-050SC	NF32 xx 3P 16 A	NF32 xx 3P 10 A		
	3.7	FR-D740-080SC	NF63 xx 3P 20 A	NF32 xx 3P 16 A		
	5.5	FR-D740-120SC	NF63 xx 3P 32 A	NF63 xx 3P 20 A	S-N20, S-N21	S-N11, S-N12
	7.5	FR-D740-160SC	NF63 xx 3P 32 A		S-N20, S-N21	S-N20, S-N21

Tab. 3-1: *Breakers and contactors*

① Select the MCCB according to the inverter power supply capacity. Install one MCCB per inverter.
The places with "xx" refer to the breaking capacity in case of short circuit. The correct selection must be done depending on the design of the power input wiring.

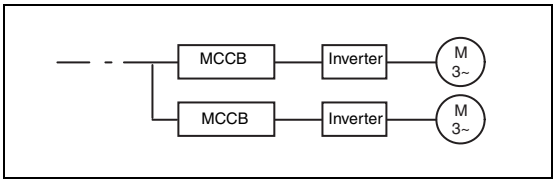

Fig. 3-2:
Installation of the breakers

I001332E

② Magnetic contactor is selected based on the AC-1 class. The electrical durability of magnetic contactor is 500,000 times. When the magnetic contactor is used for emergency stop during motor driving, the electrical durability is 25 times.
When using the MC for emergency stop during motor driving or using on the motor side during commercial-power supply operation, select the MC with class AC-3 rated current for the motor rated current.

NOTES

When the inverter capacity is larger than the motor capacity, select an MCCB and a magnetic contactor according to the inverter type and cable and reactor according to the motor output.

When the breaker on the inverter primary side trips, check for the wiring fault (short circuit), damage to internal parts of the inverter, etc. Identify the cause of the trip, then remove the cause and power on the breaker.

3.2 Terminal connection diagram

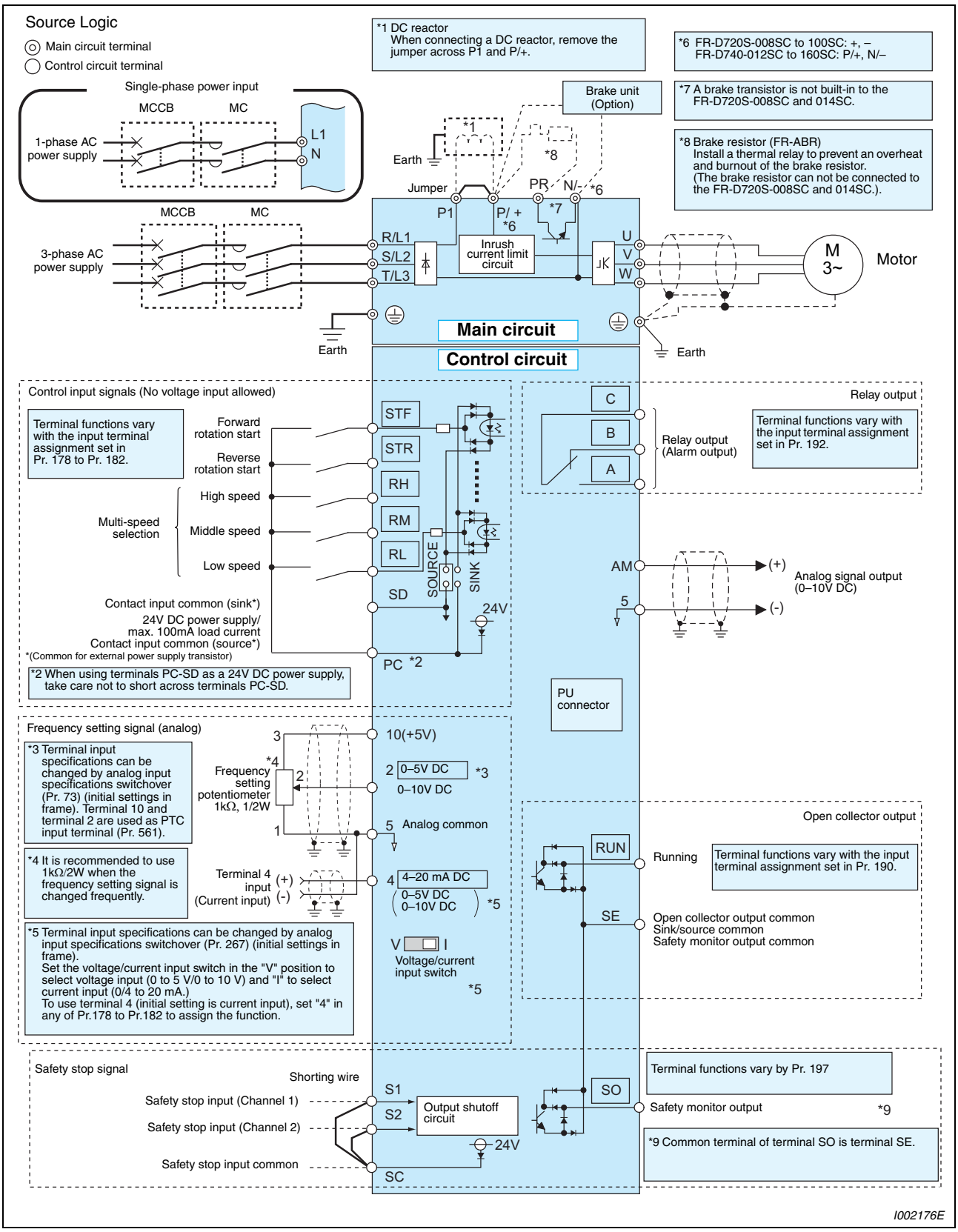

Fig. 3-3: *Terminal connection diagram of the inverter*

NOTES

To prevent a malfunction due to noise, keep the signal cables more than 10cm away from the power cables. Also separate the main circuit wire of the input side and the output side.

After wiring, wire offcuts must not be left in the inverter. Wire offcuts can cause an alarm, failure or malfunction. Always keep the inverter clean. When drilling mounting holes in an enclosure etc., take care not to allow chips and other foreign matter to enter the inverter.

The output of the single-phase power input specification is three-phase 230V.

3.3 Main circuit connection

3.3.1 Specification of main circuit terminal

Terminal	Name	Description
R/L1, S/L2, T/L3 ①	AC power input	Connect to the commercial power supply. Keep these terminals open when using the high power factor converter (FR-HC) or power regeneration common converter (FR-CV).
U, V, W	Inverter output	Voltage ouput of the inverter (3~, 0V–power supply voltage, 0.2–400Hz)
P/+ ②, PR	Brake resistor connection	Connect a brake transistor (FR-ABR) across terminals P/+ and PR. (The brake resistor can not be connected to the FR-D720S-008SC and 014SC.)
P/+ ②, N/– ③	Brake unit connection	Connect the brake unit (FR-BU2), power regeneration common converter (FR-CV) or high power factor converter (FR-HC) across terminals P/+ and N/–.
P/+ ②, P1	DC reactor connection	Remove the jumper across terminals P/+ and P1 and connect a DC reactor.
⏚	PE	For earthing the inverter chassis. Must be earthed.

Tab. 3-2: *Specification of main circuit terminal*

① When using single-phase power input, terminals are L1 and N.
② Indicated as "+" on the terminal block of the single-phase power input model.
③ Indicated as "–" on the terminal block of the single-phase power input model.

3.3.2 Terminal layout and wiring

Single-phase, 200V class

FR-D720S-008SC to 042SC	FR-D720S-070SC and 100SC
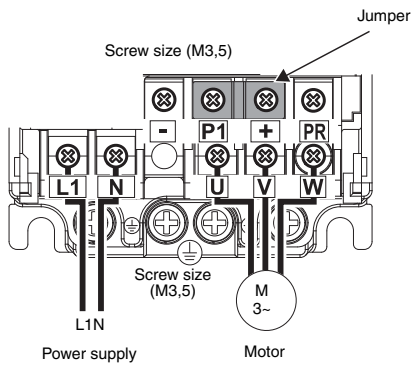	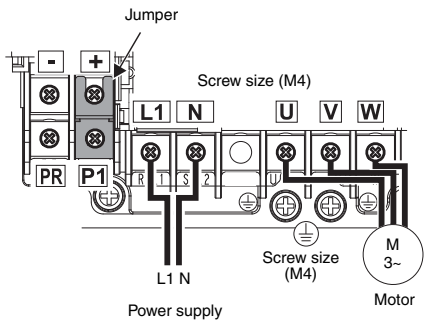

Tab. 3-3: *Terminal layout and wiring*

Three-phase, 400V class

FR-D740-012SC to 080SC	FR-D740-120SC and 160SC
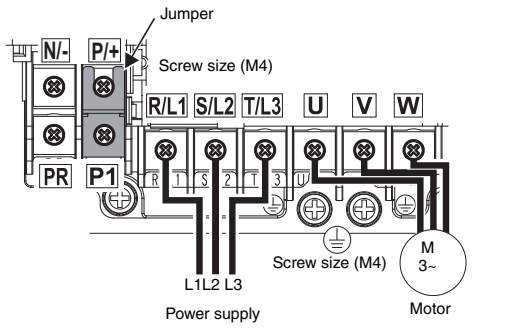	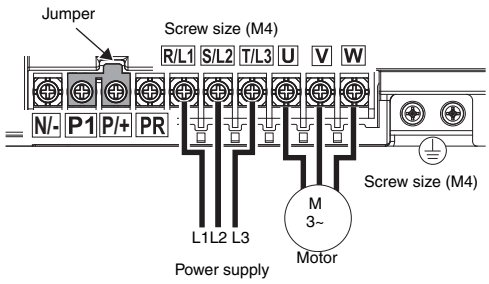

Tab. 3-4: *Terminal layout and wiring*

CAUTION:

- ***Make sure the power cables are connected to the R/L1, S/L2, T/L3 (three-phase 400V class) resp. to the L1, N (for single-phase 200V class). (Phase sequence needs not to be matched.) Never connect the power cable to the U, V, W of the inverter. Doing so will damage the inverter.***
- ***Connect the motor to U, V, W. At this time, turning on the forward rotation switch (signal) rotates the motor in the counter clockwise direction when viewed from the motor shaft.***

Cables and wiring length

Select the recommended cable size to ensure that a voltage drop will be 2% max.
If the wiring distance is long between the inverter and motor, a main circuit cable voltage drop will cause the motor torque to decrease especially at the output of a low frequency.

The following tables indicate a selection example for the wiring length of 20m.

200V class (when input power supply is 220V)

Applicable Inverter Type	Terminal Screw Size ④	Tighten-ing Torque [Nm]	Crimping Terminal		Cable Size							
					HIV etc. [mm²] ①			AWG ②		PVC [mm²] ③		
			L1, N, P1, +	U, V, W	L1, N, P1, +	U, V, W	Earth Cable Gauge	L1, N, P1, +	U, V, W	L1, N, P1, +	U, V, W	Earth Cable Gauge
FR-D720S-008SC to 042SC	M3,5	1,2	2-3,5	2-3,5	2	2	2	14	14	2,5	2,5	2,5
FR-D720S-070SC	M4	1,5	2-4	2-4	2	2	2	14	14	2,5	2,5	2,5
FR-D720S-100SC	M4	1,5	5,5-4	2-4	3,5	2	3,5	12	14	4	2,5	4

Tab. 3-5: *Cable size*

400V class (when input power supply is 440V)

Applicable Inverter Type	Terminal Screw Size ④	Tighten-ing Torque [Nm]	Crimping Terminal		Cable Size							
					HIV etc. [mm²] ①			AWG ②		PVC [mm²] ③		
			L1, L2, L3, P1, P/+	U, V, W	L1, L2, L3, P1, P/+	U, V, W	Earth Cable Gauge	L1, L2, L3, P1, P/+	U, V, W	L1, L2, L3, P1, P/+	U, V, W	Earth Cable Gauge
FR-D740-012SC to 080SC	M4	1,5	2-4	2-4	2	2	2	14	14	2,5	2,5	2,5
FR-D740-120SC	M4	1,5	5,5-4	2-4	3,5	2	3,5	12	14	4	2,5	4
FR-D740-160SC	M4	1,5	5,5-4	5,5-4	3,5	3,5	3,5	12	12	4	4	4

Tab. 3-6: *Cable size*

① The recommended cable size is that of the HIV cable (600V class 2 vinyl-insulated cable) with continuous maximum permissible temperature of 75°C. Assumes that the ambient temperature is 50°C or less and the wiring distance is 20m or less.

② The recommended cable size is that of the THHW cable with continuous maximum permissible temperature of 75°C. Assumes that the ambient temperature is 40°C or less and the wiring distance is 20m or less.
(Selection example for use mainly in the United States.)

③ The recommended cable size is that of the PVC cable with continuous maximum permissible temperature of 70°C. Assumes that the ambient temperature is 40°C or less and the wiring distance is 20m or less.
(Selection example for use mainly in Europe.)

④ The terminal screw size indicates the terminal size for R/L1, S/L2, T/L3, U, V, W, PR, P/+, N/–, P1 and a screw for earthing. (For single-phase power input, the terminal screw size indicates the size of terminal screw for L1, N, U, V, W, PR, +, – and P1 and a screw for earthing (grounding).)

The line voltage drop can be calculated by the following expression:

$$\text{Line voltage drop [V]} = \frac{\sqrt{3} \times \text{wire resistance [m}\Omega\text{/m]} \times \text{wiring distance [m]} \times \text{current [A]}}{1000}$$

Use a larger diameter cable when the wiring distance is long or when it is desired to decrease the voltage drop (torque reduction) in the low speed range.

CAUTION:

- ***Tighten the terminal screw to the specified torque. A screw that has been tightened too loosely can cause a short circuit or malfunction. A screw that has been tightened too tightly can cause a short circuit or malfunction due to the unit breakage.***
- ***Use crimping terminals with insulation sleeve to wire the power supply and motor.***

Notes on earthing

CAUTION:
Leakage currents flow in the inverter or the EMC filter respectively. To prevent an electric shock, the inverter, input filter and motor must be earthed. This inverter must be earthed. Earthing must conform to the requirements of national and local safety regulations and electrical codes (JIS, NEC section 250, IEC 536 class 1 and other applicable standards).

Use the dedicated earth terminal to earth the inverter. Do not use the screw in the casing, chassis, etc.
Use the thickest possible earth cable. Use the cable whose size is equal to or greater than that indicated in Tab. 3-6, and minimize the cable length. The earthing point should be as near as possible to the inverter.
Always earth the motor and inverter

- Purpose of earthing
  Generally, an electrical apparatus has an earth terminal, which must be connected to the ground before use.
  An electrical circuit is usually insulated by an insulating material and encased. However, it is impossible to manufacture an insulating material that can shut off a leakage current completely, and actually, a slight current flow into the case. The purpose of earthing the case of an electrical apparatus is to prevent operator from getting an electric shock from this leakage current when touching it.
  To avoid the influence of external noises, this earthing is important to audio equipment, sensors, computers and other apparatuses that handle low-level signals or operate very fast.
- Earthing methods and earthing work
  As described previously, earthing is roughly classified into an electrical shock prevention type and a noise affected malfunction prevention type. Therefore, these two types should be discriminated clearly, and the following work must be done to prevent the leakage current having the inverter's high frequency components from entering the malfunction prevention type earthing:
  - Where possible, use independent earthing for the inverter. If independent earthing (I) is impossible, use joint earthing (II) where the inverter is connected with the other equipment at an earthing point. Joint earthing as in (III) must be avoided as the inverter is connected with the other equipment by a common earth cable.
    A leakage current including many high frequency components flows in the earth (ground) cables of the inverter and inverter-driven motor. Therefore, use the independent earthing (grounding) and separate the earthing cable of the inverter from equipment sensitive to EMI.
    In a high building, it may be effective to use the EMI prevention type earthing (grounding) connecting to an iron structure frame, and electric shock prevention type earthing (grounding) with the independent earthing together.
  - This inverter must be earthed. Earthing must conform to the requirements of national and local safety regulations and electrical codes. (JIS, NEC section 250, IEC 536 class 1 and other applicable standards).
  - Use the thickest possible earth cable. The earth cable should be of not less than the size indicated in Tab. 3-6.
  - The grounding point should be as near as possible to the inverter, and the ground wire length should be as short as possible.
  - Run the earth cable as far away as possible from the I/O wiring of equipment sensitive to noises and run them in parallel in the minimum distance.

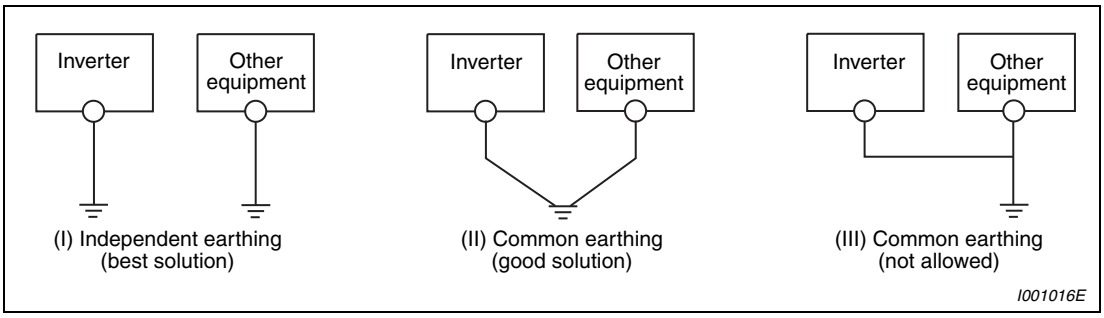

Fig. 3-4: *Earthing the drive*

Total wiring length

The maximum possible length of the motor cables depends on the capacity of the inverter and the selected carrier frequency.

The lengths in the following tables are for unshielded cables. When shielded cables are use divide the values listed in the table by 2.

200V class

Pr. 72 "PWM frequency selection" Setting (Carrier Frequency)	FR-D720S-				
	008SC	014SC	025SC	042SC	≥ 070SC
≤ 1 (1kHz)	200 m	200 m	300 m	500 m	500 m
2 to 15 (2kHz to 14,5kHz)	30 m	100 m	200 m	300 m	500 m

Tab. 3-7: *Total wiring length*

400V class

Pr. 72 "PWM frequency selection" Setting (Carrier Frequency)	FR-D740-				
	012SC	022SC	036SC	050SC	≥ 080SC
≤ 1 (1kHz)	200 m	200 m	300 m	500 m	500 m
2 to 15 (2kHz to 14,5kHz)	30 m	100 m	200 m	300 m	500 m

Tab. 3-8: *Total wiring length*

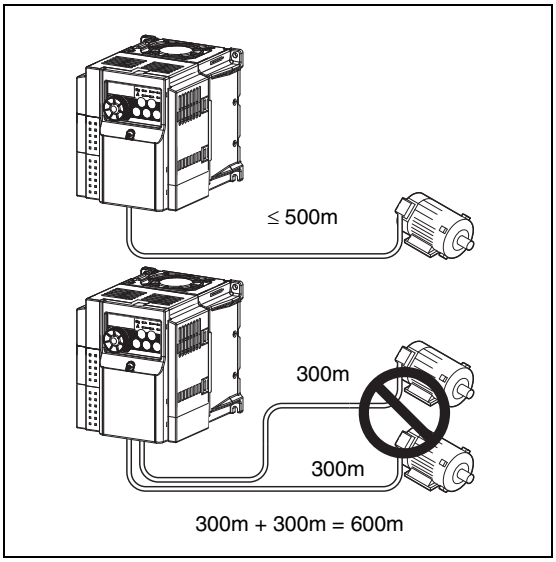

Fig. 3-5:
Remember that in the table above the total wiring length is what is being referred to. In parallel connections of several motors every motor wire must be counted. In this example, for the inverter FR-D720S-070SC or more or FR-D740-080SC or more the permissible wiring length is exceeded by the two parallel motor lead wires.

I001980E

NOTES

Note that the motor windings are subjected to significantly higher loads when the motor is operated by inverter than with normal mains operation. The motors must be approved for inverter operation by the manufacturer (refer also to section 3.7.4).

Especially for long-distance wiring, the inverter may be affected by a charging current caused by the stray capacitances of the wiring, leading to a malfunction of the overcurrent protective function, fast response current limit function, or stall prevention function or a malfunction or fault of the equipment connected on the inverter output side.
If fast-response current limit malfunctions, disable this function. When the stall prevention function misoperates, increase the stall level. (Refer Pr. 22 "Stall prevention operation level" and Pr. 156 "Stall prevention operation selection".)

Refer to section 6.14.1 for details of Pr. 72 "PWM frequency selection".

When using the automatic restart after instantaneous power failure function with wiring length exceeding below, select without frequency search (Pr. 162 = "1, 11").

Motor Capacity	**0.1K**	**0.2K**	**≥ 0.4K**
Wiring length	20 m	50 m	100 m

3.4 Control circuit specifications

The functions of the terminals highlighted in grey can be adjusted with parameters 178 to 182 "Input terminal function assignment" and Pr. 190, Pr. 192 or Pr. 197 "Output terminal function assignment" (refer to section 6.9). The listed settings show the default configuration as shipped, which you can restore by resetting to the factory defaults.

Input signals

	Terminal	Name	Description		Rated Specifications	Refer to Page
Contact input	STF	Forward rotation start	Turn on the STF signal to start forward rotation and turn it off to stop.	When the STF and STR signals are turned on simultaneously, the stop command is given.	Input resistance: 4.7kΩ Voltage at opening: 21V to 26V DC Contacts at short-circuited: 4 to 6mA DC	6-88
	STR	Reverse rotation start	Turn on the STR signal to start reverse rotation and turn it off to stop.			
	RH, RM, RL	Multi-speed selection	Multi-speed can be selected according to the combination of RH, RM and RL signals.			
Reference point	SD	Contact input common (sink) 24V DC power supply common	A determined control function is activated, if the corresponding terminal is connected to the terminal SD (sink logic). The SD terminal is isolated from the digital circuits via opto-couplers. The terminal is isolated from the reference potentials of the analog circuit (terminal 5) and the open collector outputs (terminal SE).		—	—
	PC	24V DC power supply, contact input common (source)	24V DC/0.1A output With negative logic and control via open collector transistors (e.g. a PLC) the positive pole of an external power source must be connected to the PC terminal. With positive logic the PC terminal is used as a common reference for the control inputs. This means that when positive logic is selected (default setting of the EC units) the corresponding control function is activated by connecting its terminal to the PC terminal.		Power supply voltage range: 22V to 26,5V DC Permissible load current: 100 mA	3-27

Tab. 3-9: *Input signals (1)*

	Terminal	Name	Description	Rated Specifications	Refer to Page
Frequency setting	10 (Output voltage 5V DC)	Frequency setting power supply	Used as power supply when connecting potentiometer for frequency setting (speed setting) from outside of the inverter. Rated output voltage: 5V DC Recommended potentiometer: 1kΩ, 2W linear, multi turn potentiometer	5.0V DC ± 0,2V, Permissible load current 10mA	6-147
	2	Frequency setting (voltage)	Inputting 0 to 5V DC (or 0 to 10V) provides the maximum output frequency at 5V (10V) and makes input and output proportional. Use Pr. 73 to switch from among input 0 to 5V DC (initial setting), 0 to 10V DC.	Input resistance: 10kΩ ± 1kΩ Maximum permissible voltage: 20V DC	
	4	Frequency setting (current)	Inputting 4 to 20mA DC (or 0 to 5V, 0 to 10V) provides the maximum output frequency at 20mA and makes input and output proportional. This input signal is valid only when the AU signal is on (terminal 2 input is invalid). To use terminal 4 (initial setting is current input), set "4" in any of Pr.178 to Pr.182 to assign the function, and turn ON AU signal. Use Pr. 267 to switch from among input 4 to 20mA (initial setting), 0 to 5V DC and 0 to 10V DC. Set the voltage/current input switch in the "V" position to select voltage input (0 to 5V/ 0 to 10V). Current input (initial status) Voltage input 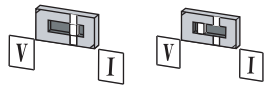	Current input: Input resistance: 249Ω ± 5Ω Maximum permissible current: 30mA Voltage input: Input resistance: 10kΩ ± 1kΩ Maximum permissible voltage: 20V DC	
	5	Frequency setting common	Terminal 5 provides the common reference potential (0V) for all analog set point values and for the analog output signals AM (voltage). The terminal is isolated from the digital circuit's reference potential (SD). This terminal should not be grounded. If local regulations require grounding of the reference potential note that this can propagate any noise in the ground potential to the control electronics, thus increasing sensitivity to interference.	—	
PTC thermistor	10	PTC thermistor input	For connecting PTC thermistor output (thermal motor protection). When PTC thermistor protection is valid (Pr. 561 ≠ 9999) terminal 2 is not available for frequency setting.	PTC thermistor resistance: 500Ω–30kΩ (Set by Pr. 561)	6-66
	2				

Tab. 3-9: *Input signals (2)*

NOTE

Set Pr. 267 and a voltage/current input switch correctly, then input analog signals in accordance with the settings.
Applying a voltage with voltage/current input switch in "I" position (current input is selected) or a current with switch in"V" position (voltage input is selected) could cause component damage of the inverter or analog circuit of output devices. Refer to section 6.15 for details.

Output signals

	Terminal	Name	Description		Rated Specifications	Refer to Page
Relay	A, B, C	Relay output (alarm output)	The alarm is output via relay contacts. The block diagram shows the normal operation and voltage free status. If the protective function is activated, the relay picks up. 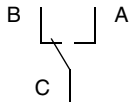		Contact capacity: 230V AC/0.3A (Power factor: 0.4) or 30V DC/0.3A	6-98
Open collector	RUN	Inverter running	Switched low when the inverter output frequency is equal to or higher than the starting frequency (initial value 0.5Hz). Switched high during stop or DC injection brake operation.		Permissible load: 24V DC (max. 27V DC), 0.1A (A voltage drop is 3.4V maximum when the signal is on.)	
	SE	Open collector output common	Reference potential for the signals RUN and SO.		—	—
Analog output	AM	Analog voltage output	Select one e.g. output frequency (Pr. 158) from 18 monitor items. The output signal is proportional to the magnitude of the corresponding monitoring item. Not output during inverter reset.	Output item: Output frequency (initial setting)	Output signal: 0–10V DC Permissible load current: 1 mA (load impedance: ≥ 10kΩ) Resolution: 8 bit	6-118

Tab. 3-10: *Output signals*

Communication

	Name	Description	Specification	Refer to Page
RS485	PU connector	With the PU connector, communication can be made through RS485.	Conforming standard: EIA-485 (RS485) Transmission format: Multidrop Communication speed: 4800 to 38400bps Overall length: 500m	3-30, 6-193

Tab. 3-11: *Communication signal*

Safety stop signal

Terminal	Name	Description	Specification	Refer to Page
S1	Safety stop input (Channel 1)	Terminals S1 and S2 are for safety stop input signals used with the safety relay module. Terminals S1 and S2 are used simultaneously (dual channel). Inverter output is shut off by shortening/opening across terminals S1 and SC and across S2 and SC. In the initial status, terminals S1 and S2 are shorted with terminal SC by shortening wire. Remove the shortening wire and connect the safety relay module when using the safety stop function.	Input resistance: 4.7kΩ Current: 4–6 mA (In case of shorted to SC) Voltage: 21–26V (In case of open from SC) Logic: source logic. (cannot be changed)	3-22
S2	Safety stop input (Channel 2)			
SC	Safety stop input terminal common	Common terminal for terminals S1 and S2. Connected to terminal PC inside of the inverter.	—	
SO	Safety monitor output (open collector output)	The signal indicates the status of safety stop input. Low indicates safe state, and High indicates drive enabled or fault detected. (Low is when the open collector output transistor is ON (conducts). High is when the transistor is OFF (does not conduct).) If High is output when both of terminals S1 and S2 are open, refer to the "FR-D700 SC EC – Safety stop function instruction manual, document no.: BCN-A211508-005“ for the cause and countermeasure.	Load: 24VDC/0.1A max. Voltage drop: 3.4V max. (In case of 'ON' state)	
SE	Open collector output common	Common terminal for terminals RUN and SO.	—	

Tab. 3-12: *Safety stop signal*

3.4.1 Control circuit terminals

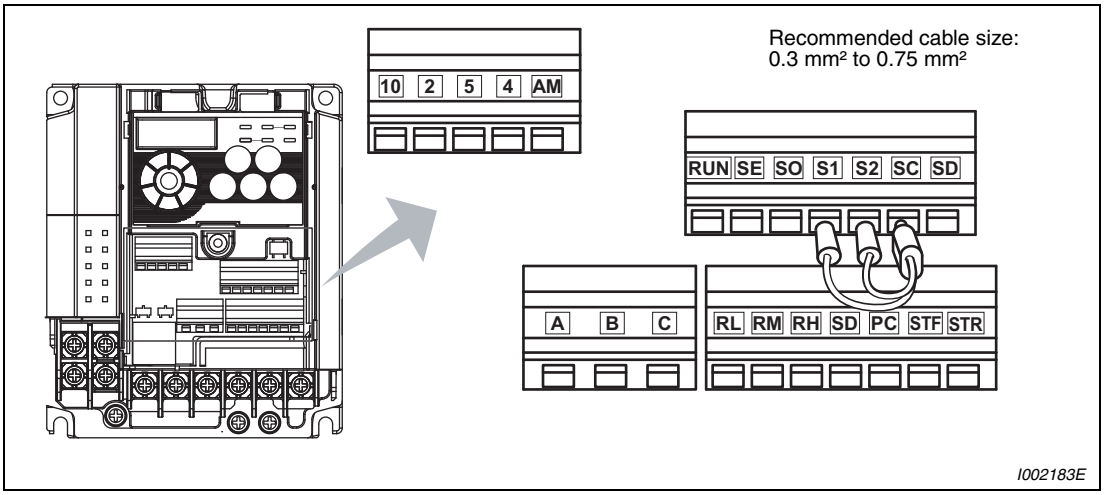

Fig. 3-6: *Terminal layout*

Connection to the terminals

Use a wire end sleeve and a cable with a sheath stripped off for the control circuit wiring. For a single wire, strip off the sheath of the cable and apply directly.

① Remove about 10mm of the cable insulation. Wire the stripped cable after twisting it to prevent it from becoming loose. In addition, do not solder it.

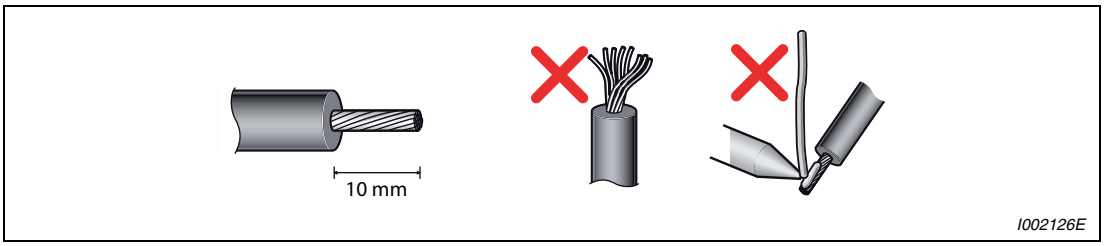

Fig. 3-7: *Preparation of the cable*

② Insert wires to a wire end sleeve, and check that the wires come out for about 0 to 0.5 mm from a sleeve.

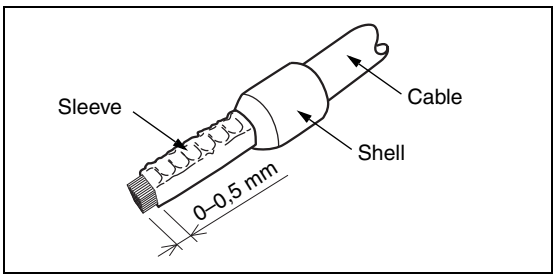

Fig. 3-8:
Fixing of wire end sleeves

I001984E

③ Check the condition of the wire end sleeve after crimping. Do not use a wire end sleeve of which the crimping is inappropriate, or the face is damaged.

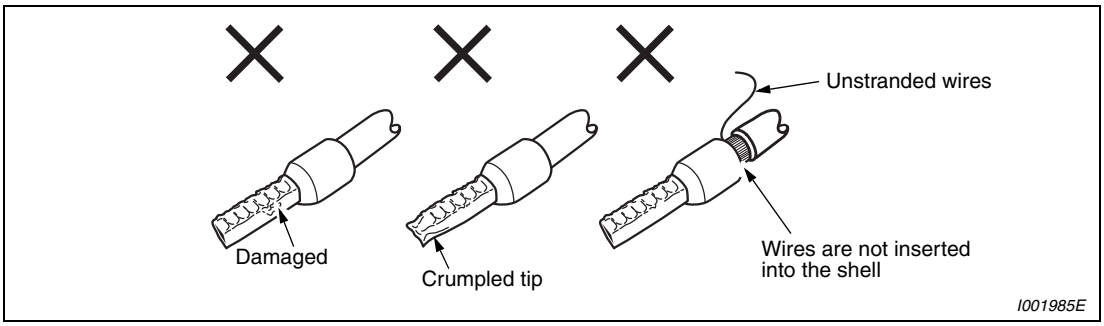

Fig. 3-9: *Incorrectly crimped wire end sleeves*

Wire Size [mm²]	Wire End Sleeve Model			Recommended Wire End Sleeve Crimping Tool
	With Insulation Sleeve	Without Insulation Sleeve	For UL Wire ①	
0.3	AI 0,5-10WH	—	—	CRIMPFOX 6/6T-F (Maker: Phoenix Contact Co., Ltd)
0.5			AI 0,5-10WH-GB	
0.75	AI 0,75-10GY	A 0,75-10	AI 0,75-10GY-GB	
1	AI 1-10RD	A 1-10	AI 1-10RD/1000GB	
1.25/1.5	AI 1,5-10BK	A 1,5-10	AI 1,5-10BK/1000GB ②	
0.75 (for two wires)	AI-TWIN 2 × 0,75-10GY	—	—	

Tab. 3-13: *Recommended wire end sleeves (Maker: Phoenix Contact Co., Ltd)*

① A bar terminal with an insulation sleeve compatible with MTW wire which has a thick wire insulation.

② Applicable for terminal ABC

Wire Size [mm²]	Wire End Sleeve Product Number	Insulation Product Number	Recommended Wire End Sleeve Crimping Tool
0.3 to 0.75	BT 0.75-11	VC 0.75	NH 67

Tab. 3-14: *Recommended wire end sleeves (Maker: NICHIFU Co., Ltd)*

④ Insert the wire into a socket.

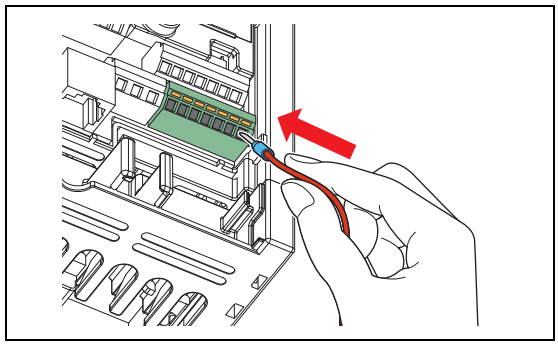

Fig. 3-10:
Cable connection

I001986E

⑤ When using a stranded wire without a wire end sleeve or a single wire, push a open/close button all the way down with a flathead screw driver, and insert the wire.

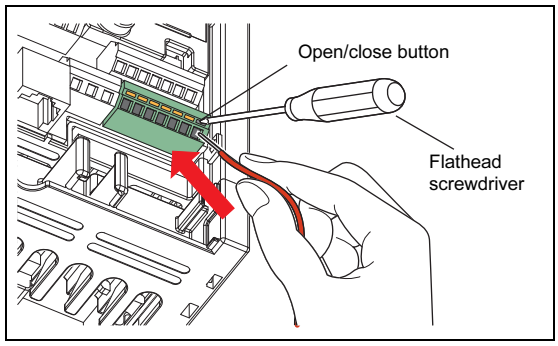

Fig. 3-11:
Connection of a stranded wire

I001987E

CAUTION:

- ***When using a stranded wire without a wire end sleeve, twist enough to avoid short circuit with a nearby terminals or wires.***
- ***Place the flathead screwdriver vertical to the open/close button. In case the blade tip slips, it may cause to damage of inverter or injuries.***

Wire removal

Pull the wire with pushing the open/close button all the way down firmly with a flathead screwdriver.

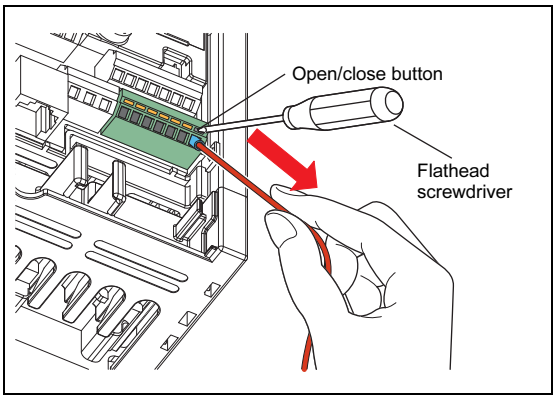

Fig. 3-12:
Wire removal

I001988E

CAUTION:

- ***Use a small flathead screwdriver (Tip thickness: 0.4mm/tip width: 2.5mm, such as SZF 0-0,4 x 2,5 of Phoenix Contact Co., Ltd.). If a flathead screwdriver with a narrow tip is used, terminal block may be damaged.***
- ***Place the flathead screwdriver vertical to the open/close button. In case the blade tip slips, it may cause to damage of inverter or injuries.***

Common terminals of the control circuits PC, 5, SE

Terminals PC, 5, and SE are all common terminals (0V) for I/O signals and are isolated from each other. Avoid connecting the terminal PC and 5 and the terminal SE and 5. Terminal PC is a common terminal for the contact input terminals (STF, STR, RH, RM and RL).

The open collector circuit is isolated from the internal control circuit by photocoupler.

Terminal 5 is a common terminal for frequency setting signal (terminal 2 or 4) and analog output terminal AM. It should be protected from external noise using a shielded or twisted cable.

Terminal SE is a common terminal for the open collector output terminals RUN and SO.

The contact input circuit is isolated from the internal control circuit by photocoupler.

Signal inputs by contactless switch

The contacted input terminals of the inverter (STF, STR, RH, RM and RL) can be controlled using a transistor instead of a contacted switch as shown below. According to the adjusted control logic, PNP transistors (positive logic) or NPN transistors (negative logic) must be used to activate the inputs.

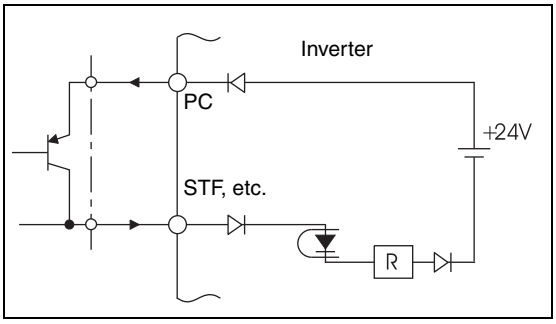

Fig. 3-13:
External signal input in source logic using transistor (initial setting)

I001020E

3.4.2 Wiring instructions

- Use shielded or twisted cables for connection to the control circuit terminals and run them away from the main and power circuits (including the 230V relay sequence circuit).
- Use two or more parallel micro-signal contacts or twin contacts to prevent a contact faults when using contact inputs since the control circuit input signals are micro-currents.

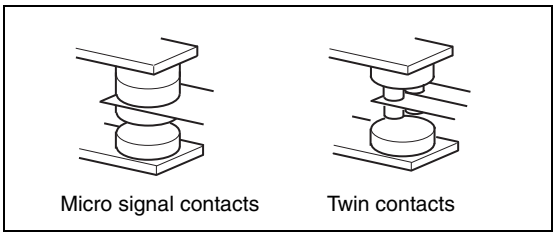

Fig. 3-14:
Contacts

- Do not apply a voltage to the contact input terminals (e.g. STF) of the control circuit.
- Always apply a voltage to the alarm output terminals (A, B, C) via a relay coil, lamp, etc. In no way must a voltage be short-circuited by these relay contacts.
- It is recommended to use the cables of 0.3–0.75mm² gauge for connection to the control circuit terminals.
- The wiring length should be 30m maximum.
- Do not short terminal PC and SD. Inverter may be damaged.

3.4.3 Safety stop function

The terminals related to the safety stop function are shown below. For the rated specification of each terminal refer to Tab. 3-12.

Terminal		Description	
S1 ①		For input of safety stop channel 1.	Between S1 and SC / S2 and SC Open: In safety stop mode. Short: Other than safety stop mode.
S2 ①		For input of safety stop channel 2.	
SC		Common terminal for S1, S2 signals. SC is connected to terminal PC internally.	—
SO ②	SAFE signal	For output of safety stop condition. The signal is output when inverter output is shut off due to the safety stop function.	OFF: Drive enabled or drive stop (at an internal safety circuit fault) ④ ON: Drive stop (no internal safety circuit fault) ④
RUN ③	SAFE2 signal	As output for failure detection and alarm. Outputs when there is no internal safety circuit fault ④.	OFF: Internal safety circuit fault ④ ON: No internal safetycircuit fault ④)
SE		Common terminal for open collector outputs (terminals RUN and SO)	—

Tab. 3-15: *Safety stop function terminals*

① In the initial status, terminal S1 and S2 are shorted with terminal SC by shortening wire. Remove the shortening wire and connect the safety relay module when using the safety stop function.

② In the initial setting, safety monitor output signal (SAFE signal) is assigned to terminal SO. The function can be assigned to other terminals by setting "80" (positive logic) or "180" (negative logic) to any of Pr. 190, Pr. 192 or Pr. 197.

③ In the initial setting, inverter running (RUN signal) is assigned to terminal RUN. Set "81" to Pr. 190 to assign SAFE2 signal. The function can be assigned to other terminals by setting "81" (positive logic) or "181" (negative logic) to any of Pr. 190, Pr. 192 or Pr. 197.

④ At an internal safety circuit fault, E.SAF or E.CPU is displayed on the operation panel.

NOTES

Use SAFE signal for the purpose to monitor safety stop status. SAFE signal cannot be used as safety stop input signal to other devices (other than the safety relay module.)

SAFE2 signal can only be used to output an alarm or to prevent restart of an inverter. The signal cannot be used as safety stop input signal to other devices.

Wiring connection diagram

To prevent restart at fault occurrence, connect terminals RUN (SAFE2 signal) and SE to terminals XS0 and XS1, because polarity of XS0 is positive, and polarity of XS1 is negative.
To prevent restart at fault occurrence, connect terminals RUN (SAFE2 signal) and SE to terminals XS0 and XS1, which are the feedback input terminals of the safety relay module.
By setting Pr.190 to "81" (SAFE2 signal), terminal RUN is turned OFF at fault occurrence.

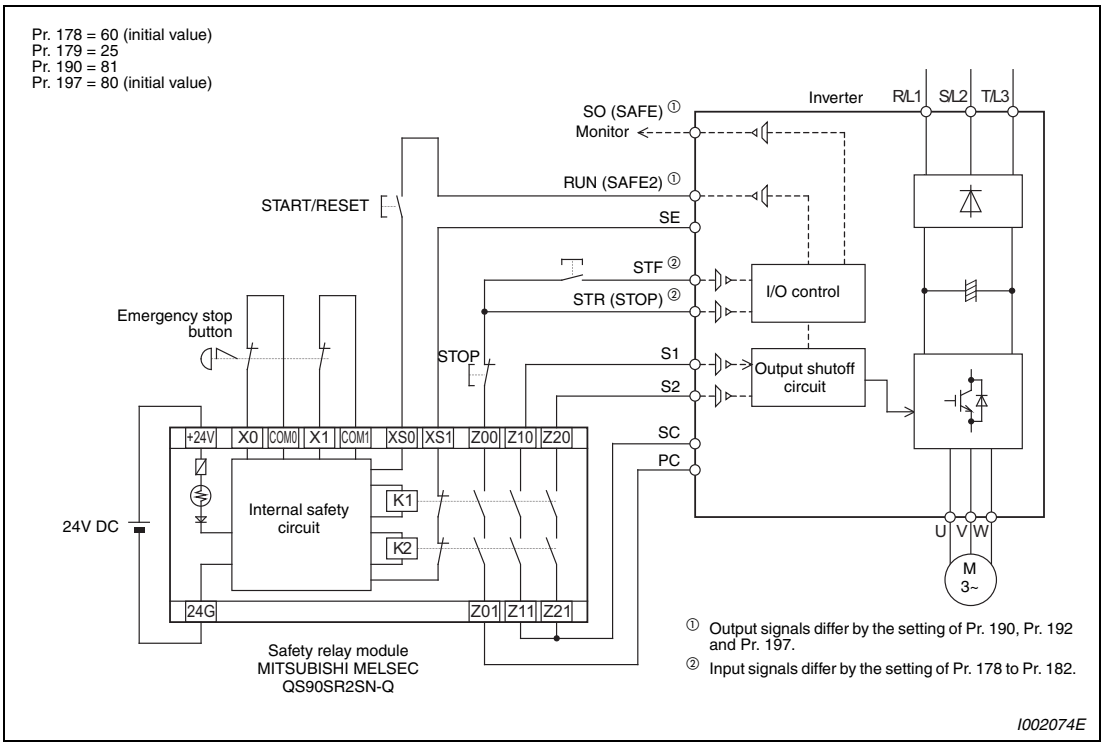

Fig. 3-15: *Connecting the Safety relay module QS90SR2SN-Q of Mitsubishi*

NOTE

Changing the terminal assignment using Pr. 190, Pr. 192 or Pr. 197 may affect the other functions. Make setting after confirming the function of each terminal.

After the power-up, to reset the safety stop mode, press the START switch, and also press the STF switch, then start the motor rotation. In the above wiring example, the motor rotation will not occur in the event of reset of ‘safe-condition’ until STF is pressed.

CAUTION:

To prevent restart in case of recovering from input power loss of drive, 3-wired connection for STF/STOP control is recommended. In case of 2-wire connection and using latching type switch to short between STF and PC for starting, ensure the compliance with safety requirement for the restarting when the drive recover from input power loss.

Safety stop function operation

Input Power	Input Signal		Internal Safety Circuit ①	Output Signal		Operation State
	S1-SC	S2-SC		SAFE ③	SAFE2 ③	
OFF	—	—	—	OFF	OFF	Output shutoff (Safe state)
ON	Short	Short	No failure	OFF	ON	Drive enabled
			Detected	OFF	OFF	Output shutoff (Safe state)
	Open	Open	No failure ②	ON	ON	Output shutoff (Safe state)
			Detected	OFF	OFF	Output shutoff (Safe state)
	Short	Open	N/A ②	OFF	OFF	Output shutoff (Safe state)
	Open	Short	N/A ②	OFF	OFF	Output shutoff (Safe state)

Tab. 3-16: *Description of Safety stop function operation*

① At an internal safety circuit fault, E.SAF or E.CPU is displayed on the operation panel.

② SA is displayed on the operation panel when both the S1 and S2 signals are in the open state without any internal safety circuit fault (E.SAF, E.CPU).

③ ON: Transistor used for an open collector output is conducted.
OFF: Transistor used for an open collector output is not conducted.

④ N/A denotes a condition where circuit fault does not apply.

For more details, refer to the “FR-D700 SC EC – Safety stop function instruction manual (BCN-A211508-005)".

CAUTION:

To use the safety stop function, connect the FR-D700 SC source-logic safety terminal models only to a safety relay module. If the FR-D700 sink-logic safety terminal models and the FR-D700 SC source-logic safety terminal models are connected, the safety stop function does NOT operate.

Safety stop when operating multiple frequency inverters in parallel

Wiring of frequency inverters FR-D700 SC

The safety stop function can be applied when using multiple FR-D740 SC and FR-D720S SC inverters. Connect as shown in the diagram below.

Details of the safety stop function are written on the "FR-D700 SC EC – Safety stop function instruction manual (BCN-A211508-005)". You can download the manual from the Mitsubishi homepage.

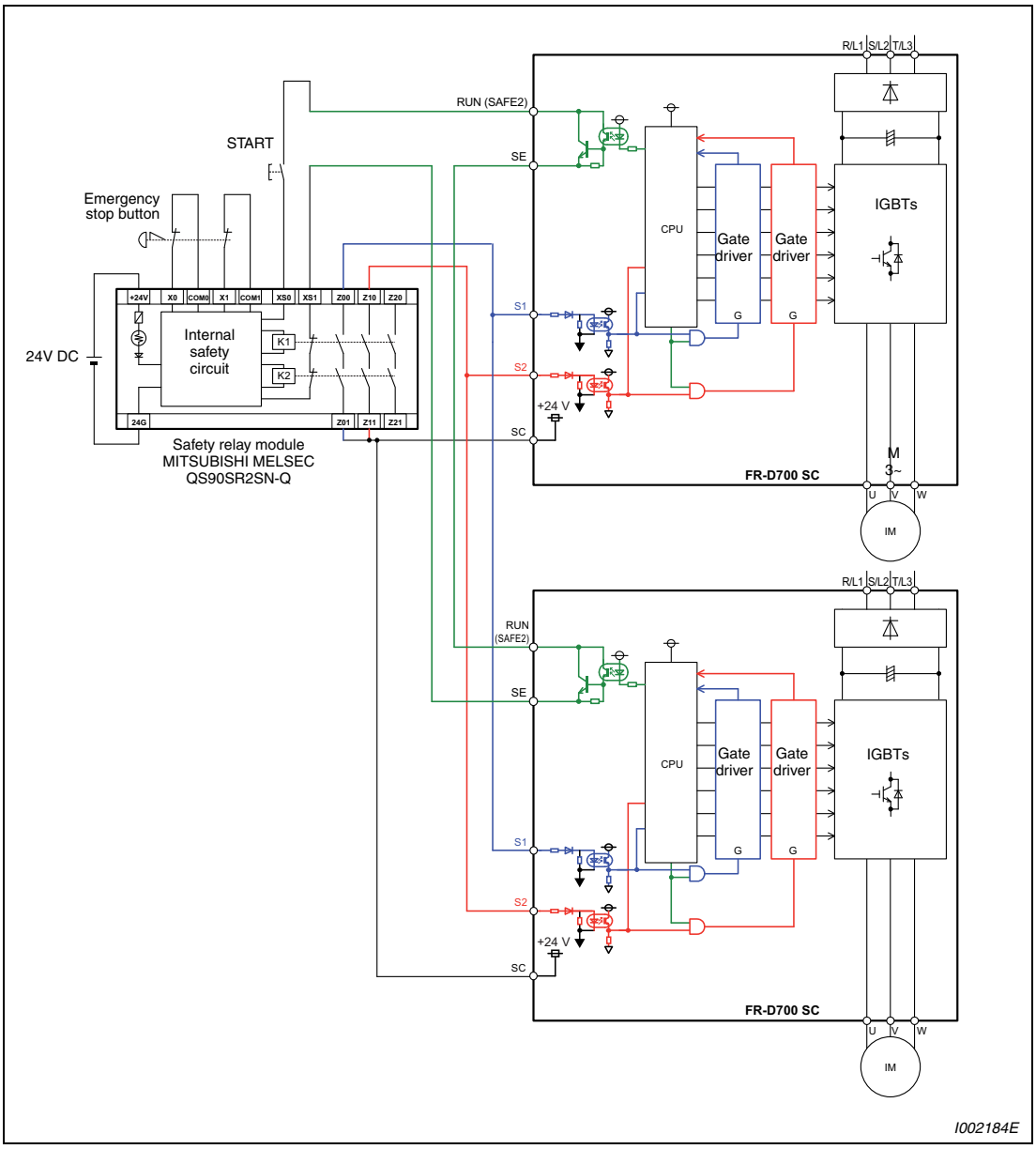

Fig. 3-16: *Connection of multiple frequency inverters to a safety relay module when using the safety stop function*

NOTES

By setting Pr.190 RUN terminal function selection = "81 (SAFE2 signal)", terminal RUN is turned OFF at fault occurrence.

Never connect the FR-D700 SC source-logic safety terminal models with FR-D700 sink-logic safety terminal models. When connected, the safety stop function does NOT operate.

3.4.4 Changing the control logic

FR-D700 SC frequency inverters offer the possibility of choosing between two types of control logic. Depending on the direction of the flowing current, one distinguishes between:

- In sink logic, a signal switches on when a current flows from the corresponding signal input terminal. Terminal SD is common to the contact input signals. Terminal SE is common to the open collector output signals.
- In source logic, a signal switches on when a current flows into the corresponding signal input terminal. Terminal PC is common to the contact input signals. Terminal SE is common to the open collector output signals.

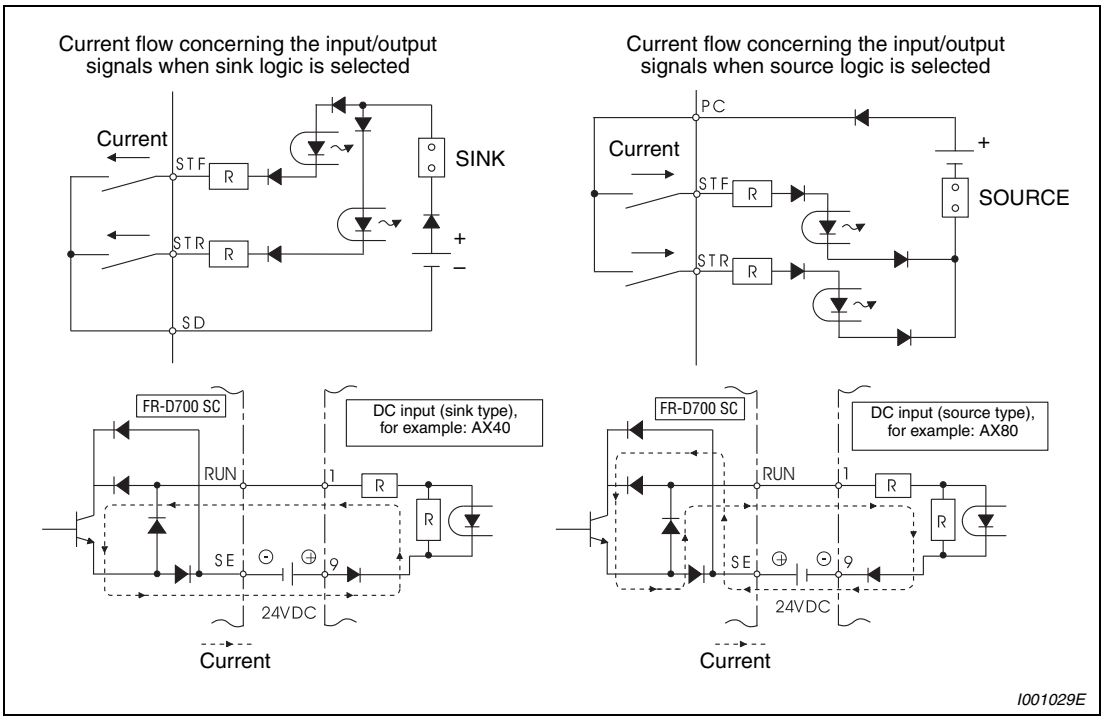

Fig. 3-17: *Changing the control logic*

The input signals are set to source logic (SOURCE) when shipped from the factory. To change the control logic, the jumper connector above the control circuit terminal block must be moved to the other position.

(The output signals may be used in either the sink or source logic independently of the jumper connector position.)

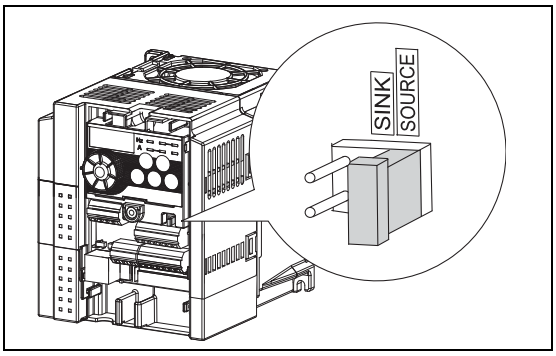

Fig. 3-18:
Changing the control logic

NOTES

Turn off the inverter power before switching a jumper connector.

The sink-source logic change-over jumper connector must be fitted in only one of those positions. If it is fitted in both positions at the same time, the inverter may be damaged.

The capacity plate is placed on the front cover and the rating plate is on the inverter. Since these plates have the same serial numbers, always reinstall the removed cover onto the original inverter.

Using an external power supply

- Sink logic type
  Use terminal PC as a common terminal to prevent a malfunction caused by undesirable current. Do not connect terminal SD of the inverter with terminal 0V of the external power supply.
  (When using terminals PC-SD as a 24V DC power supply, do not install a power supply in parallel in the outside of the inverter. Doing so may cause a malfunction due to undesirable current.)

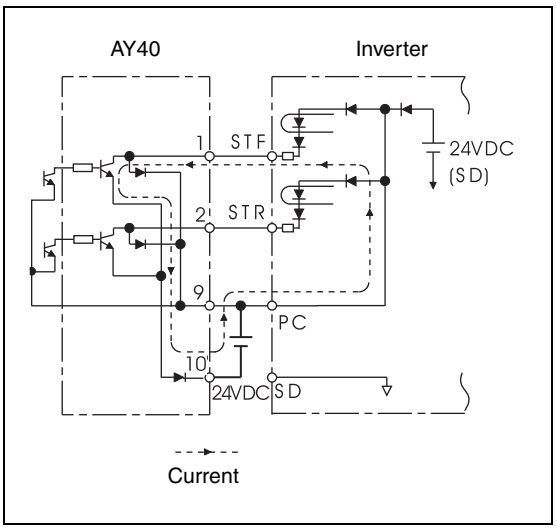

Fig. 3-19:
Using an external power supply in connection with the outputs of a PLC (sink logic type)

I001030E

- Source logic type
  When using an external power supply for transistor output, use terminal SD as a common to prevent misoperation caused by undesirable current.

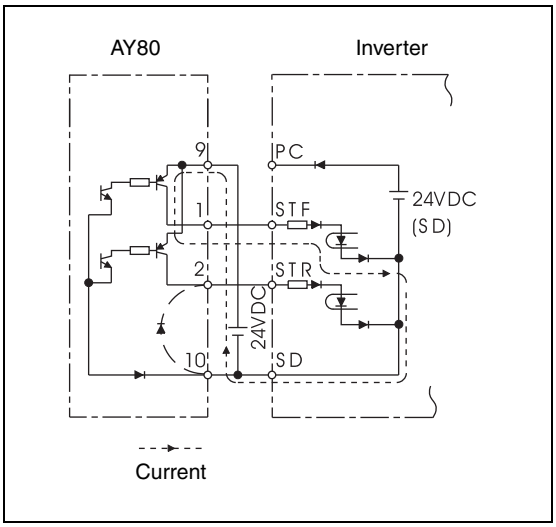

Fig. 3-20:
Using an external power supply in connection with the outputs of a PLC (source logic type)

I001031E

3.5 PU connector

Using the PU connector, you can perform communication operation from a parameter unit FR-PU07/FR-PA07 or a personal computer. Parameter setting and monitoring can be performed by FR Configurator.
Remove the inverter front cover when connecting.

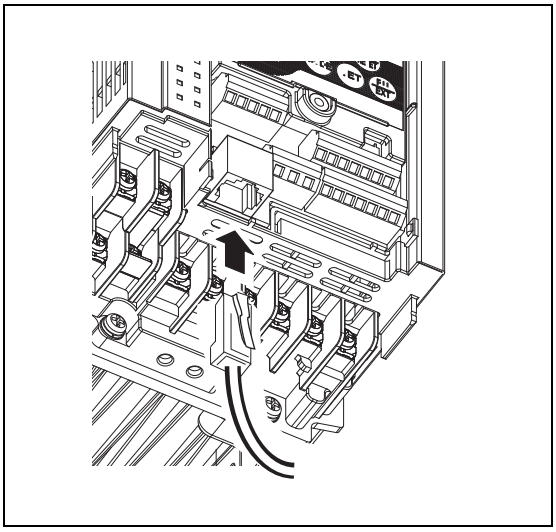

Fig. 3-21: *PU connector*

3.5.1 Connecting the parameter unit

A FR-PU07/FR-PA07 parameter unit can be connected via the FR-A5CBL line to the inverter and, e.g. then mounted onto a control cabinet to control the inverter from there. The maximum line length must not exceed 20m.

When connecting, make sure that the plugs in the inverter and in the parameter unit are correctly engaged. Install the inverter front cover after connecting.

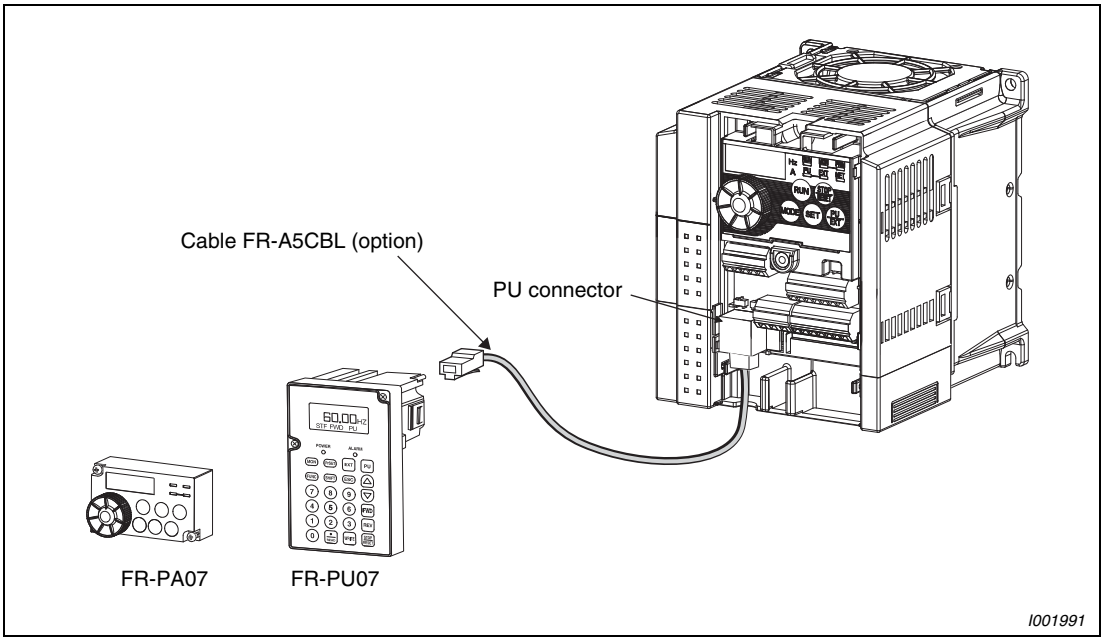

Fig. 3-22: *Connecting a parameter unit using a connection cable*

3.5.2 RS485 communication

When the PU connector is connected with a personal, FA or other computer by a communication cable, a user program can run and monitor the inverter or read and write to parameters.

The protocol can be selected from Mitsubishi inverter and Modbus RTU. For detailed information refer to section 6.18.

Specification	Description
Conforming standard:	EIA-485 (RS485)
Transmission form	Multidrop link
Communication speed	4800 to 38400 Baud
Overall extension	500m

Tab. 3-17: *Technical data of communication interface*

3.6 Connection of stand-alone option units

The inverter accepts a variety of stand-alone option units as required.

CAUTION:
Incorrect connection will cause inverter damage or accident. Connect and operate the option unit carefully in accordance with the corresponding option unit manual.

3.6.1 Magnetic contactors (MC)

Inverter input side magnetic contactor (MC)

On the inverter input side, it is recommended to provide an MC for the following purposes.

- To release the inverter from the power supply when the fault occurs or when the drive is not functioning (e.g. emergency stop operation).
  When cycle operation or heavy-duty operation is performed with an optional brake resistor connected, overheat and burnout of the discharging resistor can be prevented if a regenerative brake transistor is damaged due to insufficient heat capacity of the discharging resistor and excess regenerative brake duty.
- To prevent any accident due to an automatic restart at restoration of power after an inverter stop made by a power failure.
- The control power supply for inverter is always running and consumes a little power. When stopping the inverter for an extended period of time, powering off the inverter will save power slightly.
- To separate the inverter from the power supply to ensure safe maintenance and inspection work. The inverter's input side MC is used for the above purpose, select class JEM1038-AC3MC for the inverter input side current when making an emergency stop during normal operation.

NOTE

Since repeated inrush currents at power on will shorten the life of the converter circuit (switching life is about 1,000,000 times.), frequent starts and stops of the MC must be avoided. Turn on/off the inverter start controlling terminals (STF, STR) to run/stop the inverter.

Example ▽ As shown below, always use the start signal (ON or OFF across terminals STF or STR-PC) to make a start or stop. (Refer to section 6.9.4.)

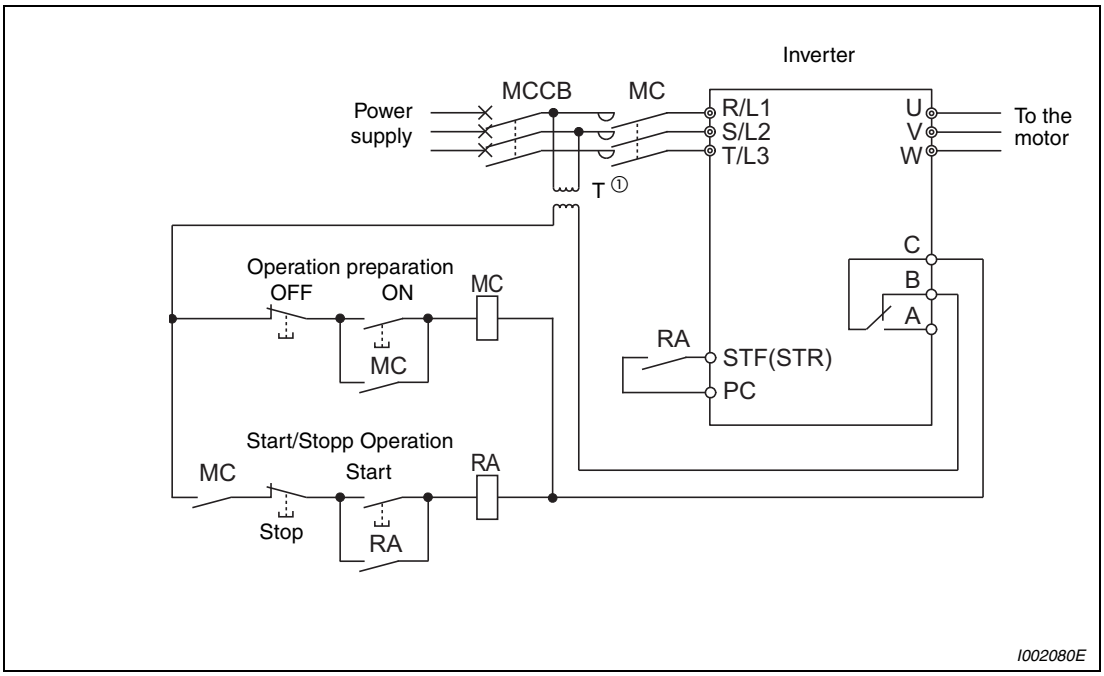

Fig. 3-23: *Example for connection of an inverter*

① When the power supply is 400V class, install a step-down transformer.

△

Handling of the inverter output side magnetic contactor

Switch the magnetic contactor between the inverter and motor only when both the inverter and motor are at a stop. When the magnetic contactor is turned on while the inverter is operating, overcurrent protection of the inverter and such will activate. When an MC is provided for switching to the commercial power supply, for example, switch it on/off after the inverter and motor have stopped.

3.6.2 Connection of a dedicated external brake resistor FR-ABR (FR-D720S-025SC or more, FR-D740-012SC or more)

Install a dedicated brake resistor (FR-ABR) outside when the motor is made to run by the load, quick deceleration is required, etc. Connect a dedicated brake resistor (FR-ABR) to terminal P/+ and PR. (For the locations of terminal P/+ and PR, refer to the terminal block layout (section 3.3.2).)

Set parameters below (refer to section 6.8.2).

Connected Brake Resistor	Parameter Setting	
	Pr. 30 „Regenerative function selection“	Pr. 70 „Special regenerative brake duty“
FR-ABR	1	10 (%)

Tab. 3-18: *Setting of parameter 30 and 70 when connecting an external brake resistor*

CAUTION:

- ***The brake resistor connected should only be the dedicated brake resistor FR-ABR.***
- ***Do not remove a jumper across terminal + and P1, resp. P/+ and P1, except when connecting a DC reactor.***
- ***The shape of jumper differs according to capacities.***

FR-D720S-025SC and 042SC

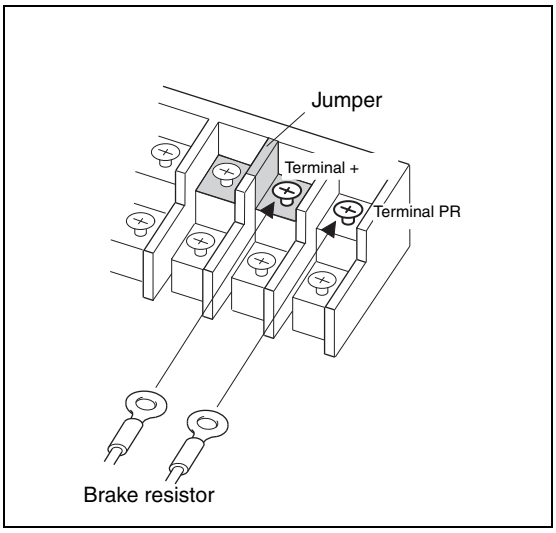

Fig. 3-24:
Connection of a brake resistor to the terminals + and PR for the inverters FR-D720S-025SC and FR-D720S-042SC

I002036E

FR-D720S-070SC and 100SC and FR-D740-012SC to 080SC

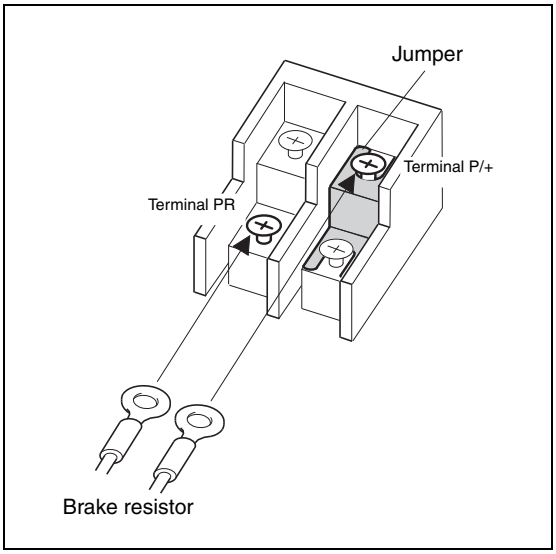

Fig. 3-25:
Connection of a brake resistor to the terminals P/+ and PR for the inverters FR-D720S-070SC and 100SC and FR-D740-012SC to FR-D740-080SC

FR-D740-120SC and 160SC

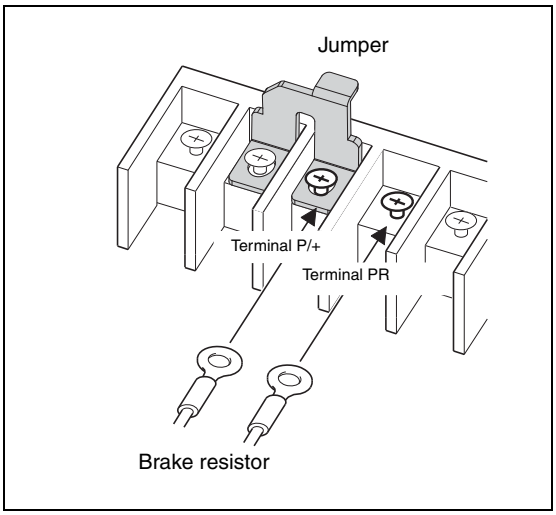

Fig. 3-26:
Connection of a brake resistor to the terminals P/+ and PR for the inverters FR-D740-120SC and FR-D740-160SC

It is recommended to configure a sequence, which shuts off power in the input side of the inverter by the external thermal relay as shown below, to prevent overheat and burnout of the high duty brake resistor in case the regenerative brake transistor is damaged. The following figure shows two connection examples (circuits). (The brake resistor can not be connected to the FR-D720S-008SC or 014SC.)

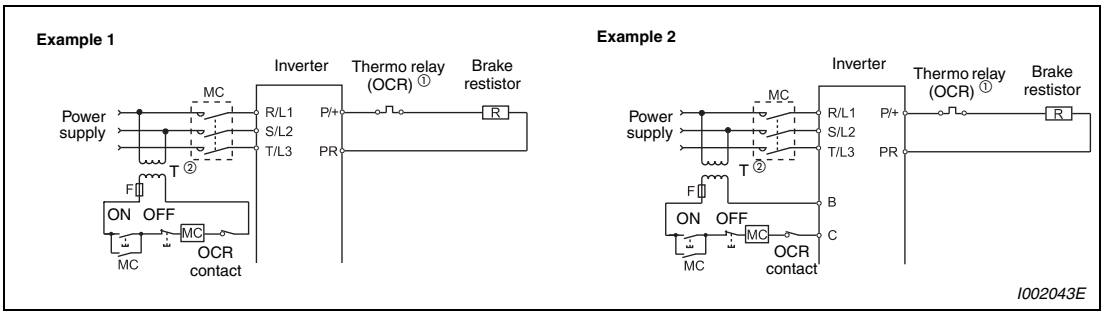

Fig. 3-27: *Protection circuits*

① Refer to Tab. 3-19 for the type number of each capacity of thermal relay and the diagram for the connection.

② When the power supply is 400V class, install a step-down transformer.

Power Supply Voltage	Type	High-duty Brake Resistor	Thermal Relay Type (Mitsubishi Product)	Contact Rating
230V	FR-ABR	FR-ABR-0.4K	TH-N20CXHZKP-0.7A	110V AC/5A 220V AC/2A (AC 11 class), 110V DC/0.5A 220V DC/0.25A (DC 11 class)
		FR-ABR-0.75K	TH-N20CXHZKP-1.3A	
		FR-ABR-1.5K	TH-N20CXHZKP-2.1A	
400V		FR-ABR-H0.4K	TH-N20CXHZKP-0.24A	
		FR-ABR-H0.75K	TH-N20CXHZKP-0.35A	
		FR-ABR-H1.5K	TH-N20CXHZKP-0.9A	
		FR-ABR-H2.2K	TH-N20CXHZKP-1.3A	
		FR-ABR-H3.7K	TH-N20CXHZKP-2.1A	
		FR-ABR-H5.5K	TH-N20CXHZKP-2.5A	
		FR-ABR-H7.5K	TH-N20CXHZKP-3.6A	

Tab. 3-19: *Resistor and thermal relay combination*

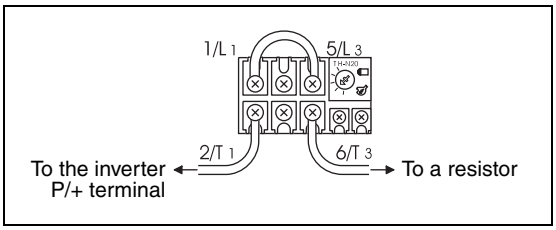

Fig. 3-28:
Connecting the thermal relay

CAUTION:

- ***The brake resistor connected should only be the dedicated brake resistor.***
- ***Perform wiring and operation according to the Instruction Manual of each option unit.***
- ***Brake resistor can not be used with the brake unit (FR-BU2), high power factor converter (FR-HC), power supply regeneration converter (FR-CV), etc.***
- ***Do not connect a resistor directly to the DC terminals P/+ and N/–. This could cause a fire.***

3.6.3 Connection of a brake unit FR-BU2

When connecting a brake unit to improve the brake capability at deceleration, make connection as shown below.

Connection example with the GRZG type discharging resistor

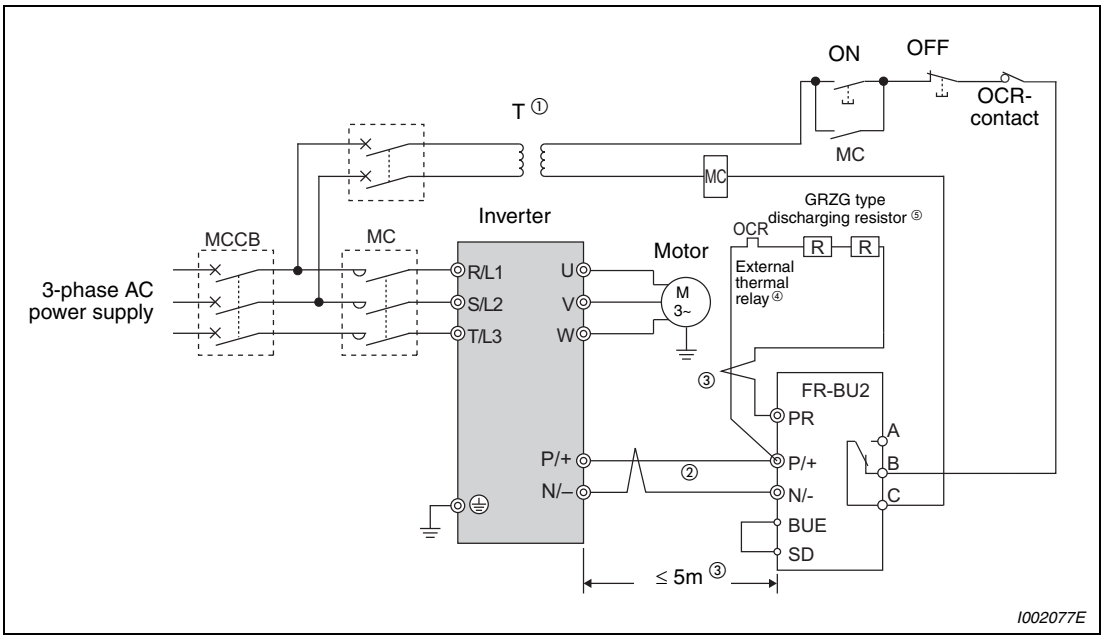

Fig. 3-29: *Connection with the brake unit FR-BU2*

① If the control contacts are only specified for 230V control power you must install a transformer when using a 400V power supply.

② Connect the inverter terminals (P/+, N/–) and brake unit terminals so that their terminal signals match with each other. (Incorrect connection will damage the inverter.)

③ The wiring distance between the inverter, brake unit and resistor unit should be within 5m. If twisted wires are used, the distance should be within 10m.

④ If the transistors in the brake unit should become faulty, the resistor can be unusually hot, causing a fire. Therefore, install a magnetic contactor on the inverters input side to configure a circuit so that a current is shut off in case of fault.

⑤ Refer to FR-BU2 manual for connection method of discharging resistor.

Brake Unit	Discharging Resistor	External Thermal Relay
FR-BU2-1.5K	GZG 300W-50Ω (one)	TH-N20CXHZKP-1.3A
FR-BU2-7.5K	GRZG 200-10Ω (six in series)	TH-N20CXHZKP-3.6A
FR-BU2-15K	GRZG 300-5Ω (eight in series)	on request

Tab. 3-20: *Recommended external relay*

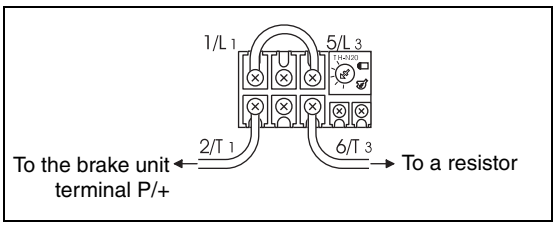

Fig. 3-30:
Connecting the thermal relay

CAUTION:

- ***If the transistors in the brake unit should become faulty, the resistor can be unusually hot, causing a fire.***
  Therefore, install a magnetic contactor on the inverters input side to configure a circuit so that a current is shut off in case of fault.
- ***Do not remove a jumper across terminal P/+ and P1 except when connecting a DC reactor.***

NOTE Set "1" in Pr. 0 "Brake mode selection" of the FR-BU2 to use GRZG type discharging resistor.

Connection example with the FR-BR(-H) type resistor

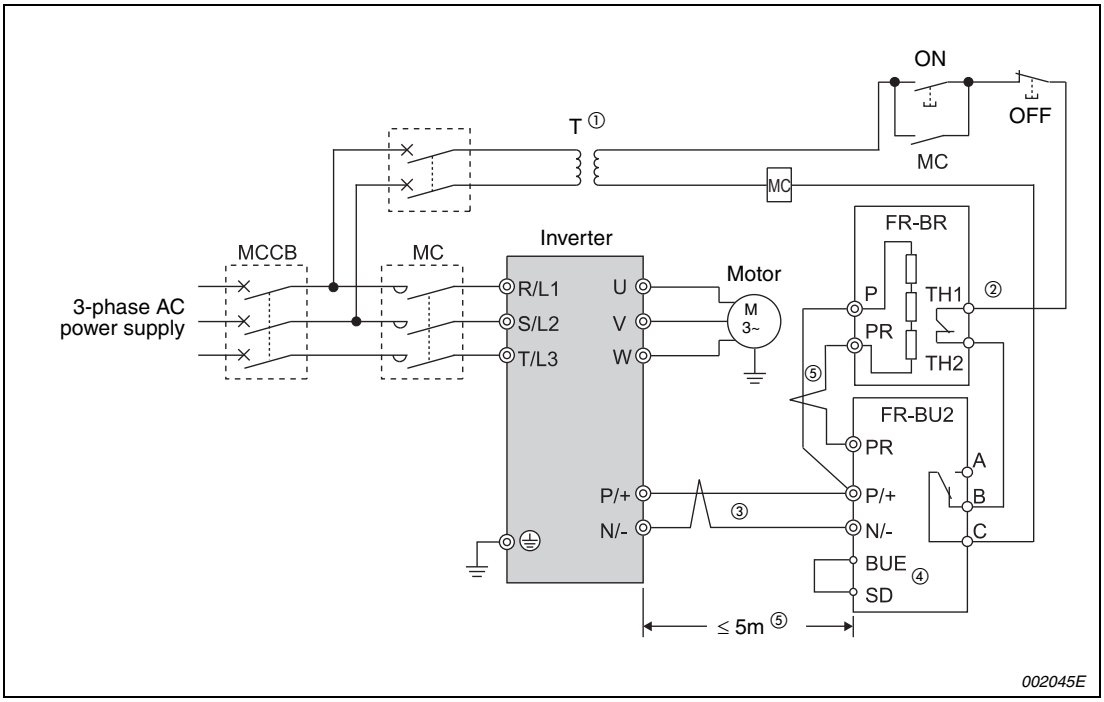

Fig. 3-31: *Connection with the brake unit FR-BU2*

① If the control contacts are only specified for 230V control power you must install a transformer when using a 400V power supply.

② Normal: across TH1-TH2 ... close, Alarm: across TH1-TH2 ... open

③ Connect the inverter terminals (P/+, N/–) and brake unit terminals so that their terminal signals match with each other. (Incorrect connection will damage the inverter.)

④ A jumper is connected across BUE and SD in the initial status.

⑤ The wiring distance between the inverter, brake unit and resistor unit should be within 5m. If twisted wires are used, the distance should be within 10m.

CAUTION:

- ***If the transistors in the brake unit should become faulty, the resistor can be unusually hot, causing a fire. Therefore, install a magnetic contactor on the inverters input side to configure a circuit so that a current is shut off in case of fault.***
- ***Do not remove a jumper across terminal P/+ and P1 except when connecting a DC reactor.***

3.6.4 Connection of the high power factor converter FR-HC

When connecting the high power factor converter (FR-HC) to suppress power harmonics, perform wiring securely as shown below.

CAUTION:

Perform wiring of the high power factor converter (FR-HC) securely as shown below. Incorrect connection will damage the high power factor converter and inverter.

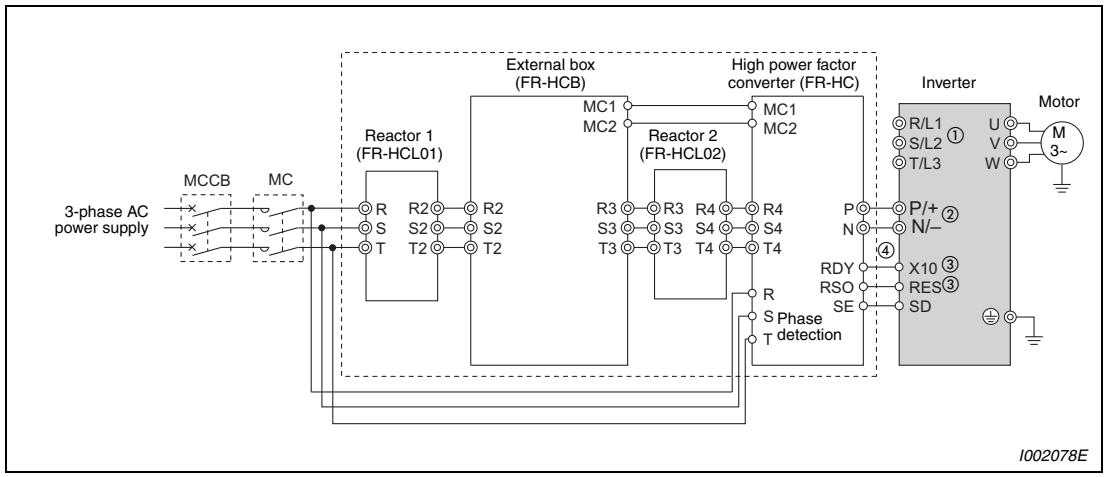

Fig. 3-32: *Connection of the high power factor converter FR-HC*

① Keep input terminals (R/L1, S/L2, T/L3) open. Incorrect connection will damage the inverter.

② Do not insert an MCCB between the terminals P/+ and N/– (between P and P/+, between N and N/–). Opposite polarity of terminals N/–, P/+ will damage the inverter.

③ Use Pr. 178 to Pr. 182 to assign the terminals used for the X10, RES signal.

④ Be sure to connect terminal RDY of the FR-HC to the X10 signal or MRS signal assigned terminal of the inverter, and connect terminal SE of the FR-HC to terminal SD of the inverter. Without proper connecting, FR-HC will be damaged.

NOTES

The voltage phases of terminals R/L1, S/L2, T/L3 and terminals R4, S4, T4 must be matched.

Use sink logic when the FR-HC is connected. The FR-HC cannot be connected when source logic (factory setting) is selected.

Do not remove a jumper across terminal P/+ and P1.

3.6.5 Connection of the power regeneration common converter FR-CV

When connecting the power regeneration common converter (FR-CV), make connection so that the inverter terminals (P/+, N/–) and the terminal symbols of the power regeneration common converter (FR-CV) are the same.

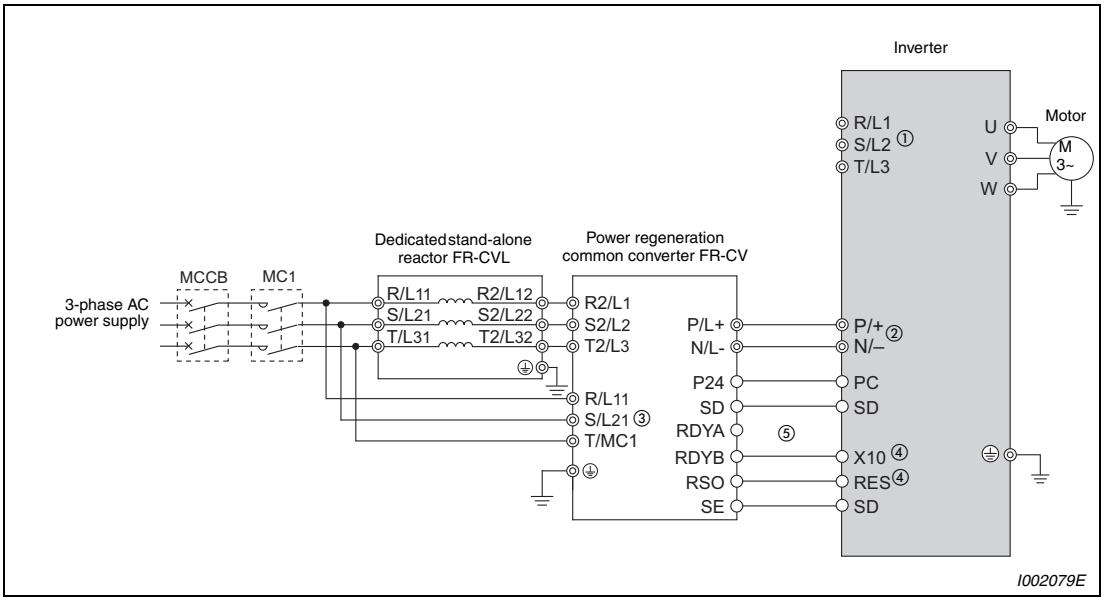

Fig. 3-33: *Connection of the power regeneration common converter FR-CV*

① Keep input terminals (R/L1, S/L2, T/L3) open. Incorrect connection will damage the inverter.

② Do not insert an MCCB between the terminals P/+ and N/– (between P/L+ and P/+, between N/L– and N/–). Opposite polarity of terminals N/–, P/+ will damage the inverter.

③ Always connect the power supply and terminals R/L11, S/L21, T/MC1. Operating the inverter without connecting them will damage the power regeneration common converter.

④ Use Pr. 178 to Pr. 182 to assign the terminals used for the X10, RES signal.

⑤ Be sure to connect terminal RDYB of the FR-CV to the X10 signal or MRS signal assigned terminal of the inverter, and connect terminal SE of the FR-CV to terminal SD of the inverter. Without proper connecting, FR-CV will be damaged.

NOTES

The voltage phases of terminals R/L11, S/L21, T/MC1 and terminals R2/L1, S2/L2, T2/L3 must be matched.

Use sink logic when the FR-CV is connected. The FR-CV cannot be connected when source logic (factory setting) is selected.

Do not remove a jumper across terminal P/+ and P1.

3.6.6 Connection of the power improving DC reactor FFR-HEL-(H)-E

When using the DC reactor (FFR-HEL-(H)-E), connect it between terminals P1 and P/+. In this case, the jumper connected across terminals P1 and P/+ must be removed. Otherwise, the reactor will not exhibit its performance.

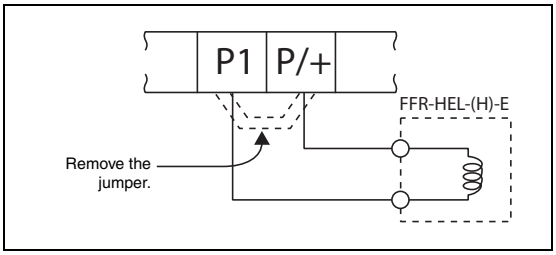

Fig. 3-34:
Connection of a DC reactor

NOTES

The wiring distance should be within 5m.

The size of the cables used should be equal to or larger than that of the power supply cables (R/L1, S/L2, T/L3).

3.6.7 Installation of a reactor

When the inverter is connected near a large-capacity power transformer (500kVA or more) or when a power capacitor is to be switched over, an excessive peak current may flow in the power input circuit, damaging the converter circuit. To prevent this, always install the optional DC reactor (FFR-HEL-(H)-E) or AC reactor (FR-BAL-B).

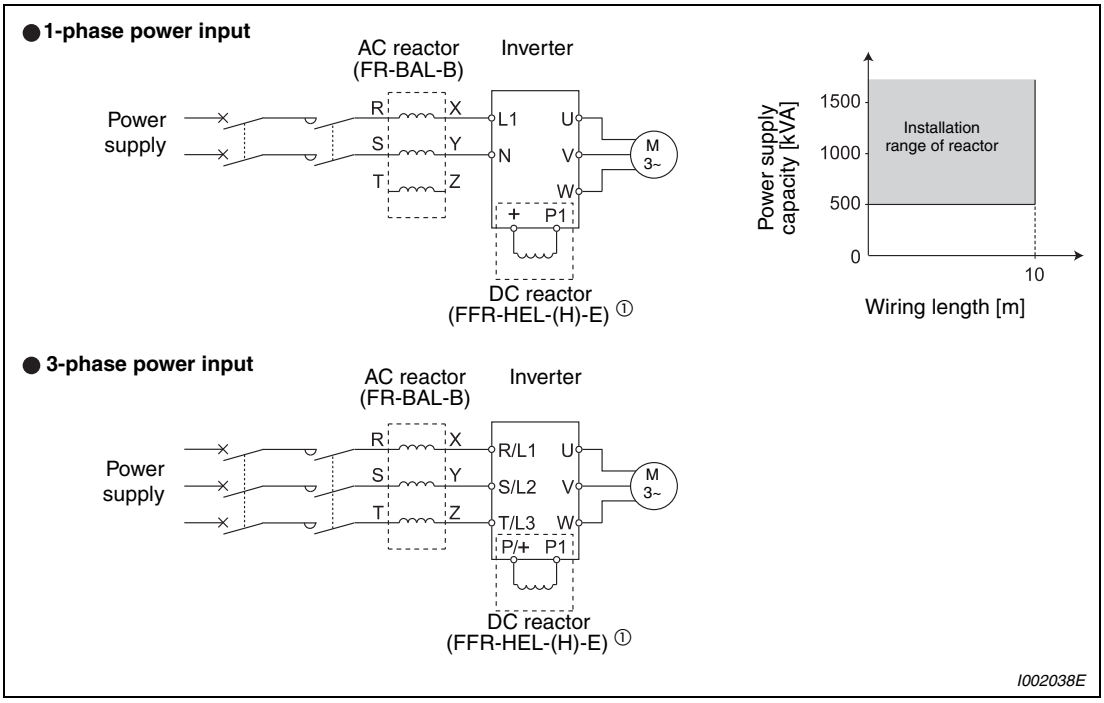

Fig. 3-35: *Installation of a reactor*

① When connecting the FFR-HEL-(H)-E, remove the jumper across terminals P/+ and P1, resp. P/+ and P1. The wiring length between the FFR-HEL-(H)-E and inverter should be 5m maximum and minimized.

NOTE Use the same wire size as that of the power supply wire (R/L1, S/L2, T/L3). (Refer to page 3-8.)

3.7 Electromagnetic compatibility (EMC)

3.7.1 Leakage currents and countermeasures

Mains filters, shielded motor cables, the motor, and the inverter itself cause stationary and variable leakage currents to PE. Since its value depends on the capacitances, carrier frequency, etc., low acoustic noise operation at the increased carrier frequency of the inverter will increase the leakage current. Therefore, take the following measures. Select the earth leakage breaker according to its rated sensitivity current, independently of the carrier frequency setting.

To-earth (ground) leakage currents

Leakage currents may flow not only into the inverter's own line but also into the other lines through the earth (ground) cable, etc. These leakage currents may operate earth (ground) leakage circuit breakers and earth leakage relays unnecessarily.

- Countermeasures
  - If the carrier frequency setting is high, decrease the Pr. 72 "PWM frequency selection" setting. Note that motor noise increases. Selecting Pr. 240 "Soft-PWM operation selection" makes the sound inoffensive.
  - By using earth leakage circuit breakers designed for harmonic and surge suppression in the inverter's own line and other line, operation can be performed with the carrier frequency kept high (with low noise).
- To-earth leakage currents
  - Take caution as long wiring will increase the leakage current. Decreasing the carrier frequency of the inverter reduces the leakage current.
  - Increasing the motor capacity increases the leakage current.
  - Shielded motor cables significantly increase the leakage current to PE (approx. double the value generated with unshielded motor cables of the same length).
  - The leakage current of the 400V class is larger than that of the 200V class.

Line-to-line leakage currents

Harmonics of leakage currents flowing in static capacities between the inverter output cables may operate the external thermal relay unnecessarily. When the wiring length is long (50m or more) for the 400V class small-capacity model (FR-D740-160SC or less), the external thermal relay is likely to operate unnecessarily because the ratio of the leakage current to the rated motor current increases.

Example ▽ Line-to-line leakage current data example
Dedicated motor: SF-JR 4P
Carrier frequency: 14.5kHz
Used wire: 2mm², 4 cores, cab tyre cable

Motor Capacity [kW]	Rated Motor Current [A]	Leakage Currents [mA] ①	
		Wiring Length 50m	Wiring Length 100m
0.4	1.1	620	1000
0.75	1.9	680	1060
1.5	3.5	740	1120
2.2	4.1	800	1180
3.7	6.4	880	1260
5.5	9.7	980	1360
7.5	12.8	1070	1450

Tab. 3-21: *Line-to-line leakage current data example (400V class)*

① The leakage current of the 200V class is about a half.

△

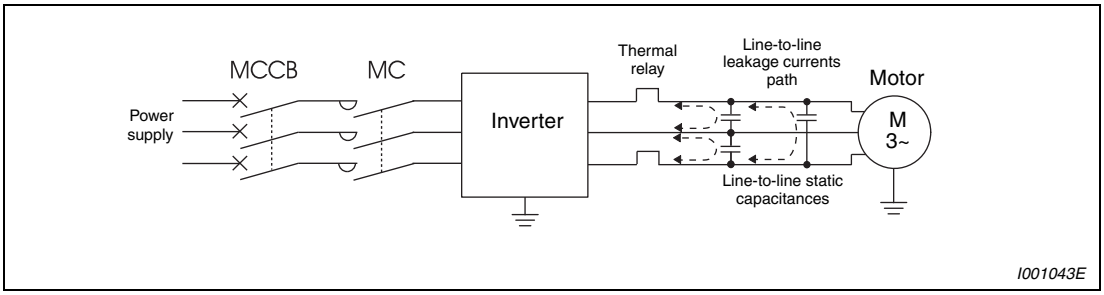

Fig. 3-36: *Line-to-line leakage currents*

- Countermeasures
  - Use Pr. 9 "Electronic thermal O/L relay".
  - If the carrier frequency setting is high, decrease the Pr. 72 "PWM frequency selection" setting. Note that motor noise increases. Selecting Pr. 240 "Soft-PWM operation selection" makes the sound inoffensive. To ensure that the motor is protected against line-to-line leakage currents, it is recommended to use a temperature sensor (e.g. PTC element) to directly detect motor temperature.
- Selecting a power supply circuit breaker:
  You can also use a circuit breaker (MCCB) to protect the power supply lines against short circuits and overloads. However, note that this does not protect the inverter (rectifiers, IGBT). Select the capacity of the circuit breaker on the basis of the cross-sectional area of the power supply lines. To calculate the required mains current trip point you need to know the power required by the inverter (Refer to Rated Input Capacity in Appendix A, Specifications) and the mains supply voltage. Select a circuit breaker with a trip point that is slightly higher than calculated, particularly in the case of breakers with electromagnetic tripping, since the trip characteristics are strongly influenced by the harmonics in the power supply line.

NOTE The earth leakage breaker must be either a Mitsubishi earth leakage breaker (ELB, for harmonics and surges) or an ELB with breaker designed for harmonic and surge suppression that is approved for use with frequency inverters.

Note on selecting a suitable power supply ELCB

If your application requires by installation standards an RCD (residual current device) as up stream protection please select according to DIN VDE 0100-530 as following:
Single phase inverter type A or B
Three phase inverter only type B

Additionally, when selecting a residual current device (RCD), leakage current caused by the mains filter, the length of the shielded motor cable and the carrier frequency must be taken into consideration.

When connecting AC current using switches without a step function, brief asymmetrical loads may result in unwanted triggering of the residual current device (RCD). It is recommendable here to use a Type B residual current device (RCD) with delayed actuation or to switch on all three phases simultaneously using a main contactor.

Calculate the trip current sensitivity of the ELB as follows:

- Breaker designed for harmonic and surge suppression:
  $I\Delta n \geq 10 \times (Ig1 + Ign + Igi + Ig2 + Igm)$
- Standard breaker:
  $I\Delta n \geq 10 \times [Ig1 + Ign + Igi + 3 \times (Ig2 + Igm)]$

Ig1, Ig2: Leakage currents in wire path during commercial power supply operation
Ign: Leakage current of inverter input side noise filter
Igm: Leakage current of motor during commercial power supply operation
Igi: Leakage current of inverter unit

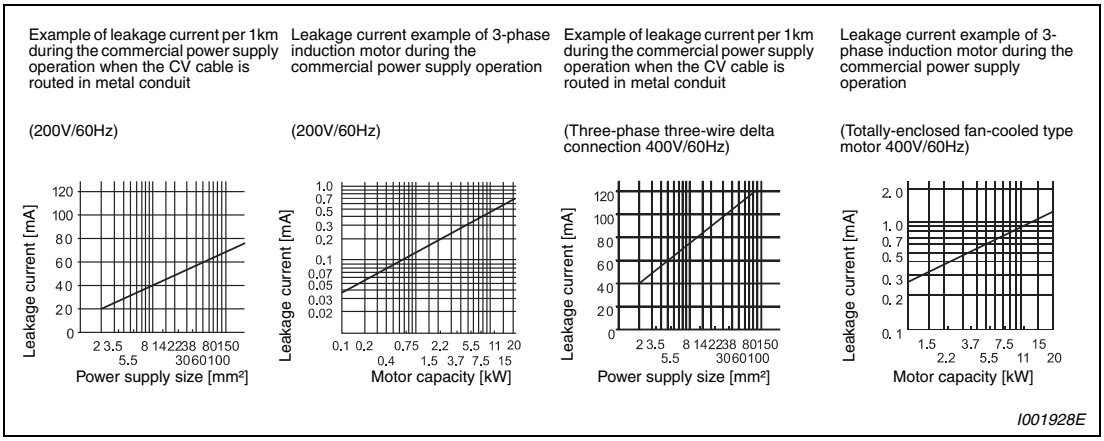

Fig. 3-37: *Leakage currents*

NOTE For star connection, the amount of leakage current is 1/3.

Example ▽

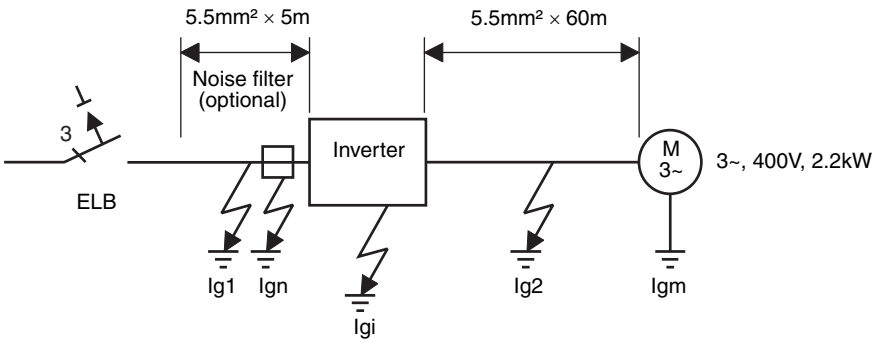

	Breaker Designed for Harmonic and Surge Suppression	Standard Breaker
Leakage current Ig1 [mA]	$\frac{1}{3} \times 66 \times \frac{5\ m}{1000\ m} = 0.11$	
Leakage current Ign [mA]	0 (without noise filter)	
Leakage current Igi [mA]	1 (with noise filter)	
Leakage current Ig2 [mA]	$\frac{1}{3} \times 66 \times \frac{60\ m}{1000\ m} = 1{,}32$	
Motor leakage current Igm [mA]	0.36	
Total leakage current [mA]	2.79	6.15
Rated sensivity current [mA]	30	100

Tab. 3-22: *Estimation of the permanent flowing leakage current (400V class, star connection)*

△

NOTES

The frequency inverter monitors its own output for ground faults up to a frequency of 120Hz. However, it is important to understand that this feature only protects the inverter itself. It cannot be used to provide protection against shock hazards for personnel.

In the connection earthed-neutral system, the sensitivity current is purified against an earth fault in the inverter output side. Earthing must conform to the requirements of national and local safety regulations and electrical codes. (JIS, NEC section 250, IEC 536 class 1 and other applicable standards)

When the breaker is installed on the output side of the inverter, it may be unnecessarily operated by harmonics even if the effective value is less than the rating. In this case, do not install the breaker since the eddy current and hysteresis loss will increase, leading to temperature rise.

The following models are standard breakers: BV-C1, BC-V, NVB, NV-L, NV-G2N, NV-G3NA and NV-2F earth leakage relay (except NV-ZHA), NV with AA neutral wire open-phase protection.
The other models are designed for harmonic and surge suppression: NV-C/NV-S/MN series, NV30-FA, NV50-FA, BV-C2, earth leakage alarm breaker (NF-Z), NV-ZHA, NV-H.

3.7.2 Inverter-generated noises and their reduction techniques

Some noises enter the inverter to malfunction it and others are radiated by the inverter to malfunction peripheral devices. Though the inverter is designed to be insusceptible to noises, it handles low-level signals, so it requires the following basic techniques. Also, since the inverter chops outputs at high carrier frequency, that could generate noises. If these noises cause peripheral devices to malfunction, measures should be taken to suppress noises.
These techniques differ slightly depending on noise propagation paths.

- Basic techniques
  - Do not run the power cables (I/O cables) and signal cables of the inverter in parallel with each other and do not bundle them.
  - Use twisted pair shielded cables for the detector connection and control signal cables. Earth the shield.
  - Earth the inverter, motor, etc. at one point.
- Techniques to reduce noises that enter and malfunction the inverter
  When devices that generate many noises (which use magnetic contactors, magnetic brakes, many relays, for example) are installed near the inverter and the inverter may be malfunctioned by noises, the following measures must be taken:
  - Provide surge suppressors for devices that generate many noises to suppress noises.
  - Fit data line filters to signal cables.
  - Earth the shields of the detector connection and control signal cables with cable clamp metal.
- Techniques to reduce noises that are radiated by the inverter to malfunction peripheral devices
  Inverter-generated noises are largely classified into:
  - those radiated by the cables connected to the inverter and inverter main circuits (I/O),
  - those electromagnetically and electrostatically induced to the signal cables of the peripheral devices close to the main circuit power supply,
  - and those transmitted through the power supply cables.

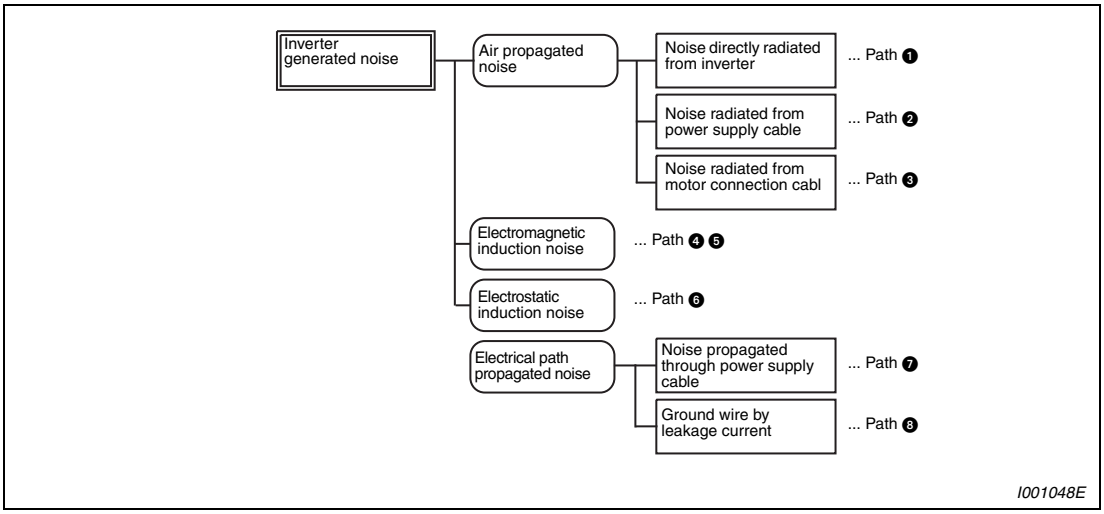

Fig. 3-38: *Noise propagation*

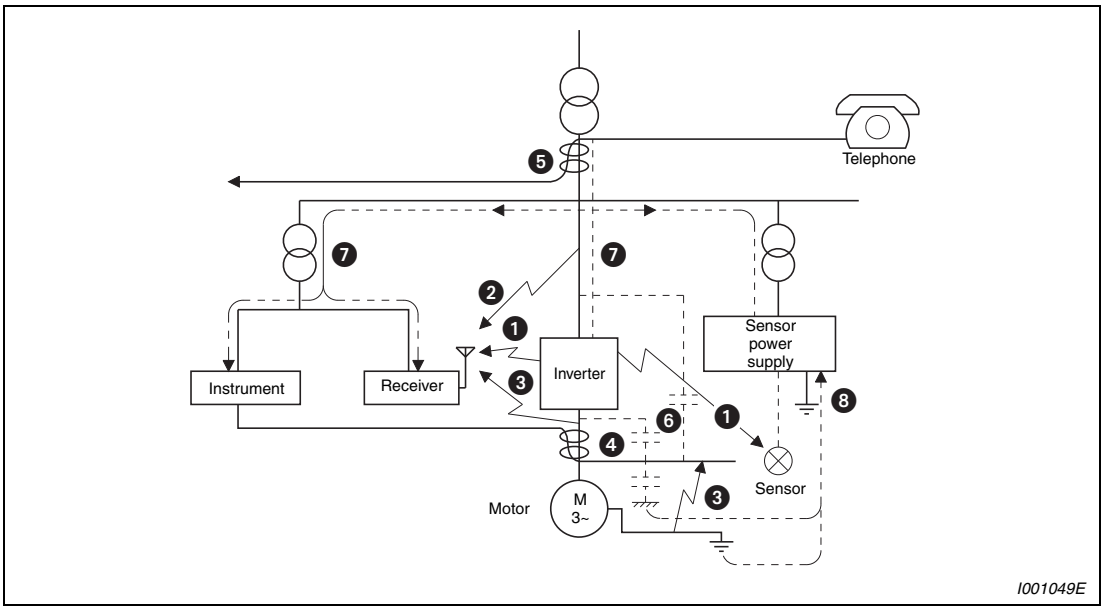

Fig. 3-39: *Noise paths*

Noise Propagation Path	Measures
❶ ❷ ❸	When devices that handle low-level signals and are liable to malfunction due to noises, e.g. instruments, receivers and sensors, are contained in the enclosure that contains the inverter or when their signal cables are run near the inverter, the devices may be malfunctioned by air-propagated noises. The following measures must be taken: • Install easily affected devices as far away as possible from the inverter. • Run easily affected signal cables as far away as possible from the inverter and its I/O cables. • Do not run the signal cables and power cables (inverter I/O cables) in parallel with each other and do not bundle them. • Inserting a filter (dU/dt, sine wave filter) into the output suppresses the radiation noise from the cables. • Use shield cables as signal cables and power cables and run them in individual metal conduits to produce further effects.
❹ ❺ ❻	When the signal cables are run in parallel with or bundled with the power cables, magnetic and static induction noises may be propagated to the signal cables to malfunction the devices and the following measures must be taken: • Install easily affected devices as far away as possible from the inverter. • Run easily affected signal cables as far away as possible from the I/O cables of the inverter. • Do not run the signal cables and power cables (inverter I/O cables) in parallel with each other and do not bundle them. • Use shield cables as signal cables and power cables and run them in individual metal conduits to produce further effects.
❼	When the power supplies of the peripheral devices are connected to the power supply of the inverter in the same line, inverter-generated noises may flow back through the power supply cables to malfunction the devices and the following measures must be taken: • Use additional (optional) noise filters as required. • Install output filters to the power cables of the inverter after you consulted MITSUBISHI.
❽	When a closed loop circuit is formed by connecting the peripheral device wiring to the inverter, leakage currents may flow through the earth cable of the inverter to malfunction the device. In such a case, disconnection of the earth cable of the device may cause the device to operate properly.

Tab. 3-23: *Noise and Countermeasures*

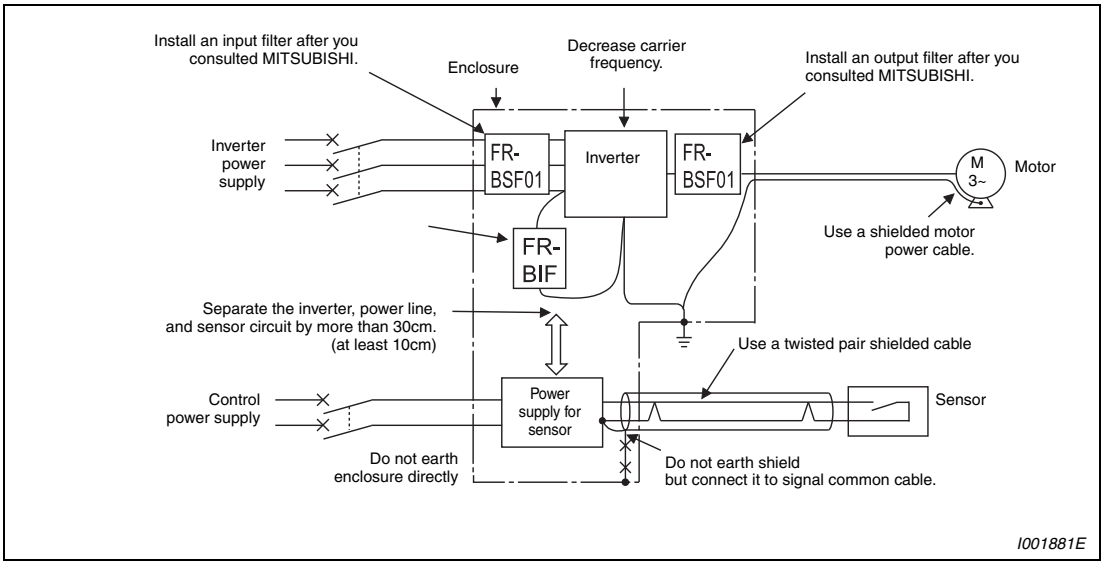

Fig. 3-40: *Noise reduction examples*

3.7.3 Power supply harmonics

The inverter may generate power supply harmonics from its converter circuit to affect the power generator, power capacitor etc. Power supply harmonics are different from noise and leakage currents in source, frequency band and transmission path. Take the following countermeasure suppression techniques.

Item	Harmonics	Noise
Frequency	Maximum 50 (≤ 3kHz)	Several 10kHz to 1GHz
Environment	To electric channel, power impedance	To-space, distance, wiring path
Quantitative understanding	Theoretical calculation possible	Random occurrence, quantitative grasping difficult
Generated amount	Nearly proportional to load capacity	Depending on the current fluctuation ratio (larger as switching is faster)
Affected equipment immunity	Specified in standard per equipment	Different depending on maker's equipment specifications
Suppression example	Provide reactor	Increase distance

Tab. 3-24: *Differences between harmonics and noises*

- Measures
  The harmonic current generated from the inverter to the input side differs according to various conditions such as the wiring impedance, whether a reactor is used or not, and output frequency and output current on the load side.
  For the output frequency and output current, we understand that they should be calculated in the conditions under the rated load at the maximum operating frequency.

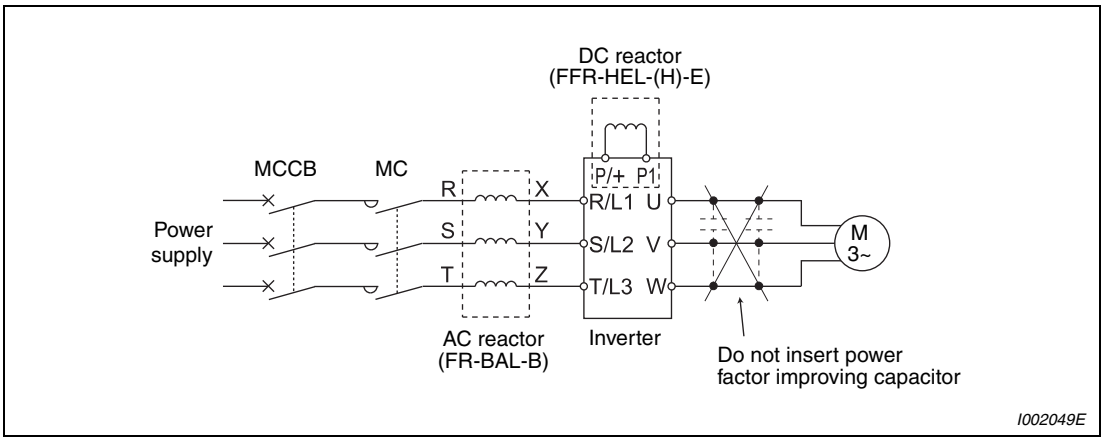

Fig. 3-41: *Reduction of power supply harmonics*

CAUTION:

The power factor improving capacitor and surge suppressor on the inverter output side may be overheated or damaged by the harmonic components of the inverter output. Also, since an excessive current flows in the inverter to activate overcurrent protection, do not provide a capacitor and surge suppressor on the inverter output side when the motor is driven by the inverter. For power factor improvement, install a reactor on the inverter input side or in the DC circuit.

3.7.4 Inverter-driven 400V class motor

In the PWM type inverter, a surge voltage attributable to wiring constants is generated at the motor terminals. Especially for a 400V class motor, the surge voltage may deteriorate the insulation. When the 400V class motor is driven by the inverter, consider the following measures:

- Rectifying the motor insulation and limiting the PWM carrier frequency according to the wiring length. For the 400V class motor, use an insulation-enhanced motor.
  - Specify the "400V class inverter-driven insulation-enhanced motor".
  - For the dedicated motor such as the constant-torque motor and low-vibration motor, use the "inverter-driven, dedicated motor".
  - Set Pr. 72 "PWM frequency selection" as indicated below according to the wiring length.

	Wiring Length		
	≤ 50m	**50m to 100m**	**≥ 100m**
Parameter 72	≤ 15 (14.5kHz)	≤ 8 (8kHz)	≤ 2 (2kHz)

Tab. 3-25: *Setting of Pr. 72 according to the wiring length*

- Limiting the voltage rise speed of the frequency inverter output voltage (dU/dT):
  If the motor requires a rise speed of 500V/µs or less you must install a filter in the output of the inverter. Please contact your Mitsubishi dealer for more details.

NOTE For details of Pr. 72 "PWM frequency selection", refer to section 6.14.

4 Operation

4.1 Precautions for use of the inverter

The FR-D700 SC series is a highly reliable product, but incorrect peripheral circuit making or operation/handling method may shorten the product life or damage the product.

Before starting operation, always recheck the following items.

- Use crimping terminals with insulation sleeve to wire the power supply and motor.
- Application of power to the output terminals (U, V, W) of the inverter will damage the inverter. Never perform such wiring.
- After wiring, wire offcuts must not be left in the inverter.
  Wire offcuts can cause an alarm, failure or malfunction. Always keep the inverter clean. When drilling mounting holes in a control box etc., take care not to allow chips and other foreign matter to enter the inverter.
- Use cables of the size to make a voltage drop 2% maximum.
  If the wiring distance is long between the inverter and motor, a main circuit cable voltage drop will cause the motor torque to decrease especially at the output of a low frequency. (Refer to page 3-8 for the recommended cable sizes.)
- The overall wiring length should be within the prescribed length.
  Especially for long distance wiring, the fast-response current limit function may be reduced or the equipment connected to the inverter output side may malfunction or become faulty under the influence of a charging current due to the stray capacity of the wiring. Therefore, note the overall wiring length. (Refer to page 3-11.)
- Electromagnetic Compatibility
  Operation of the frequency inverter can cause electromagnetic interference in the input and output that can be propagated by cable (via the power input lines), by wireless radiation to nearby equipment (e.g. AM radios) or via data and signal lines.
  Use AC or DC reactors to reduce line propagated noise (harmonics). Use shielded motor power lines to reduce output noise (refer also to section 3.7 Electromagnetic Compatibility).
- Do not install a power factor correction capacitor, surge suppressor or radio noise filter on the inverter output side. This will cause the inverter to trip or the capacitor and surge suppressor to be damaged. If any of the above devices is installed, immediately remove it.
- Before starting wiring or other work after the inverter is operated, wait for at least 10 minutes after the power supply has been switched off, and check that there are no residual voltage using a tester or the like. The capacitor is charged with high voltage for some time after power off and it is dangerous.
- A short circuit or earth fault on the inverter output side may damage the inverter modules.
  - Fully check the insulation resistance of the circuit prior to inverter operation since repeated short circuits caused by peripheral circuit inadequacy or an earth fault caused by wiring inadequacy or reduced motor insulation resistance may damage the inverter modules.
  - Fully check the to-earth insulation and inter-phase insulation of the inverter output side before power-on.
    Especially for an old motor or use in hostile atmosphere, securely check the motor insulation resistance etc.

- Do not use the inverter input side magnetic contactor to start/stop the inverter.
  Since repeated inrush currents at power ON will shorten the life of the converter circuit (switching life is about 1,000,000 times), frequent starts and stops of the MC must be avoided. Always use the start signal (ON/OFF of STF and STR signals) to start/stop the inverter.
- Across P/+ and PR terminals, connect only an external regenerative brake discharging resistor. Do not connect a mechanical brake.
  The brake resistor can not be connected to the FR-D720S-008SC and 014SC. Leave terminals P/+ and PR open. Also, never short between P/+ and PR.
- Do not apply a voltage higher than the permissible voltage to the inverter I/O signal circuits. Contact to the inverter I/O signal circuits or opposite polarity may damage the I/O devices. Especially check the wiring to prevent the speed setting potentiometer from being connected incorrectly to short terminals 10-5.
- Provide electrical and mechanical interlocks for MC1 and MC2 which are used for commercial power supply-inverterswitch-over.
  When the wiring is incorrect or if there is a commercial power supply-inverter switch-over circuit as shown below, the inverter will be damaged by leakage current from the power supply due to arcs generated at the time of switch-over or chattering caused by a sequence error.

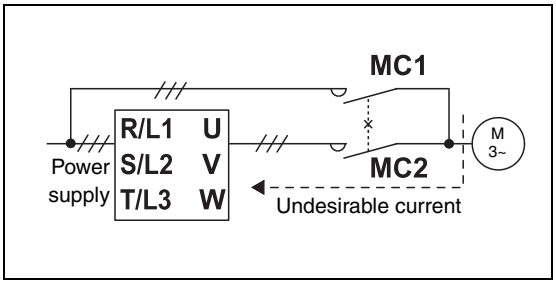

Fig. 4-1:
Mechanical interlocks for MC1 and MC2

CAUTION:
If the machine must not be restarted when power is restored after a power failure, provide a magnetic contactor in the inverter's input side and also make up a sequence which will not switch on the start signal. If the start signal (start switch) remains on after a power failure, the inverter will automatically restart as soon as the power is restored.

- Inverter input side magnetic contactor (MC)
  On the inverter input side, connect an MC for the following purposes:
  - To release the inverter from the power supply when a fault occurs or when the drive is not functioning (e.g. emergency stop operation). For example, MC avoids overheat or burnout of the brake resistor when heat capacity of the resistor is insufficient or brake regenerative transistor is damaged with short while connecting an optional brake resistor.
  - To prevent any accident due to an automatic restart at restoration of power after an inverter stop made by a power failure.
  - To separate the inverter from the power supply to ensure safe maintenance and inspection work.

- Handling of inverter output side magnetic contactor
  Switch the magnetic contactor between the inverter and motor only when both the inverter and motor are at a stop. When the magnetic contactor is turned ON while the inverter is operating, overcurrent protection of the inverter and such will activate. When MC is provided for switching to the commercial power supply, for example, switch it ON/OFF after the inverter and motor have stopped.
- When the motor speed is unstable, due to change in the frequency setting signal caused by electromagnetic noises from the inverter, take the following measures when applying the motor speed by the analog signal.
  - Do not run the signal cables and power cables (inverter I/O cables) in parallel with each other and do not bundle them.
  - Run signal cables as far away as possible from power cables (inverter I/O cables).
  - Use shield cables as signal cables.
  - Install a ferrite core on the signal cable (Example: ZCAT3035-1330 TDK).
- Instructions for overload operation
  When performing operation of frequent start/stop of the inverter, increase/decrease in the temperature of the transistor element of the inverter may repeat due to a continuous flow of large current, shortening the life from thermal fatigue. Since thermal fatigue is related to the amount of current, the life can be increased by reducing bound current, starting current, etc. Decreasing current may increase the life. However, decreasing current will result in insufficient torque and the inverter may not start. Therefore, increase the inverter capacity to have enough allowance for current.
- Make sure that the specifications and rating match the system requirements.

4.1.1 Failsafe of the system which uses the inverter

When a fault occurs, the inverter trips to output a fault signal. However, a fault output signal may not be output at an inverter fault occurrence when the detection circuit or output circuit fails, etc. Although Mitsubishi assures best quality products, provide an interlock which uses inverter status output signals to prevent accidents such as damage to machine when the inverter fails for some reason.

At the same time consider the system configuration where failsafe from outside the inverter, without using the inverter, is enabled even if the inverter fails.

Interlock method which uses the inverter status output signals

By combining the inverter status output signals to provide an interlock as shown below, an inverter alarm can be detected.

Interlock Method	Check Method	Used Signals	Refer to Page
Inverter protective function operation	Operation check of an alarm contact Circuit error detection by negative logic	Fault output signal (ALM signal)	6-102
Inverter running status	Operation ready check signal	Operation ready signal (RY signal)	6-101
	Logic check of the start signal and running signal	Start signal (STF signal, STR signal) Running signal (RUN signal)	6-86 6-101
	Logic check of the start signal and output current	Start signal (STF signal, STR signal) Output current detection signal (Y12 signal)	6-86 6-105

Tab. 4-1: *Different output signals of the frequency inverter can be used for interlocks*

Check by the output of the inverter fault signal

When the fault occurs and trips the inverter, the fault output signal (ALM signal) is output (ALM signal is assigned to terminal ABC in the initial setting). Check that the inverter functions properly. In addition, negative logic can be set (on when the inverter is normal, off when the fault occurs).

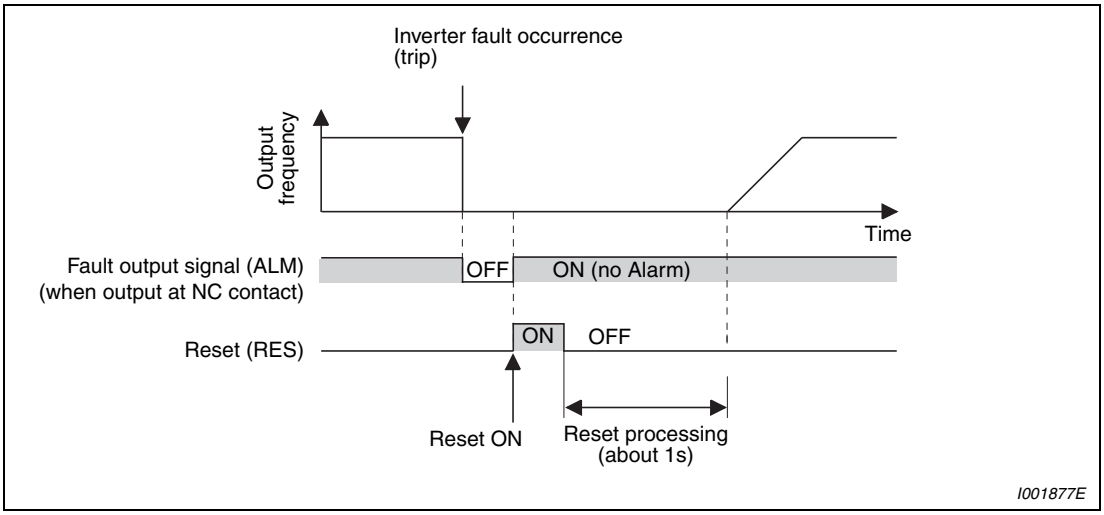

Fig. 4-2: *Contact B-C opens when a fault occurs (initial setting)*

Checking the inverter operating status by the inverter operation ready completion signal

Operation ready signal (RY signal) is output when the inverter power is on and the inverter becomes operative. Check if the RY signal is output after powering on the inverter.

Checking the inverter operating status by the start signal input to the inverter and inverter running signal

The inverter running signal (RUN signal) is output when the inverter is running (RUN signal is assigned to terminal RUN in the initial setting).

Check if RUN signal is output when inputting the start signal to the inverter (forward signal is STF signal and reverse signal is STR signal). For logic check, note that RUN signal is output for the period from the inverter decelerates until output to the motor is stopped, configure a sequence considering the inverter deceleration time.

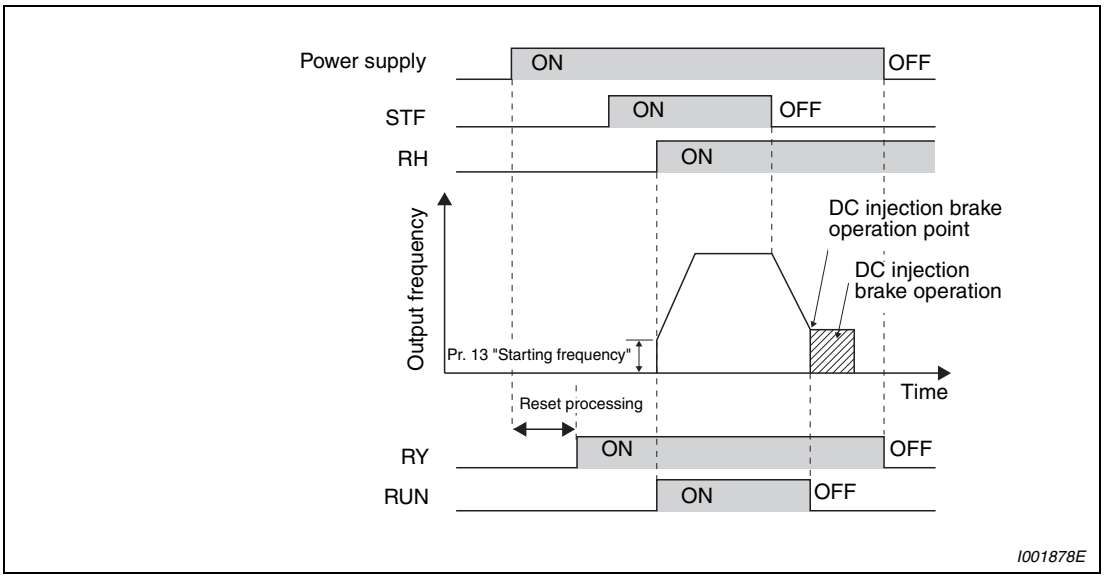

Fig. 4-3: *Ready status and motor running*

Checking the motor operating status by the start signal input to the inverter and inverter output current detection signal

The output current detection signal (Y12 signal) is output when the inverter operates and currents flows in the motor. Check if Y12 signal is output when inputting the start signal to the inverter (forward signal is STF signal and reverse signal is STR signal).

Note that the current level at which Y12 signal is output is set to 150% of the inverter rated current in the initial setting, it is necessary to adjust the level to around 20% using no load current of the motor as reference with Pr. 150 "Output current detection level".

For logic check, as same as the inverter running signal (RUN signal), the inverter outputs for the period from the inverter decelerates until output to the motor is stopped, configure a sequence considering the inverter deceleration time.

Output terminal function assignment

When using various signals, assign functions to Pr. 190, Pr. 192 and Pr. 197 "output terminal function selection" referring to the table below

Output Signal	190, 192 and 197 Setting	
	Positive Logic	Negative Logic
ALM	99	199
RY	11	111
RUN	0	100
Y12	12	112

Tab. 4-2: *Setting in positive and negative logic*

NOTE

Changing the terminal assignment using Pr. 190, Pr. 192 and Pr. 197 may affect the other functions. Make setting after confirming the function of each terminal.

Backup method outside the inverter

Even if the interlock is provided by the inverter status signal, enough failsafe is not ensured depending on the failure status of the inverter itself. For example, when the inverter CPU fails, even if the interlock is provided using the inverter fault signal, start signal and RUN signal, there is a case where a fault signal is not output and RUN signal is kept output even if an inverter fault occurs.

Provide a speed detector to detect the motor speed and current detector to detect the motor current and consider the backup system such as checking up as below according to the level of importance of the system. Check the motor running and motor current while the start signal is input to the inverter by comparing the start signal to the inverter and detected speed of the speed detector or detected current of the current detector. Note that the motor current runs as the motor is running for the period until the motor stops since the inverter starts decelerating even if the start signal turns off. For the logic check, configure a sequence considering the inverter deceleration time. In addition, it is recommended to check the three-phase current when using the current detector.

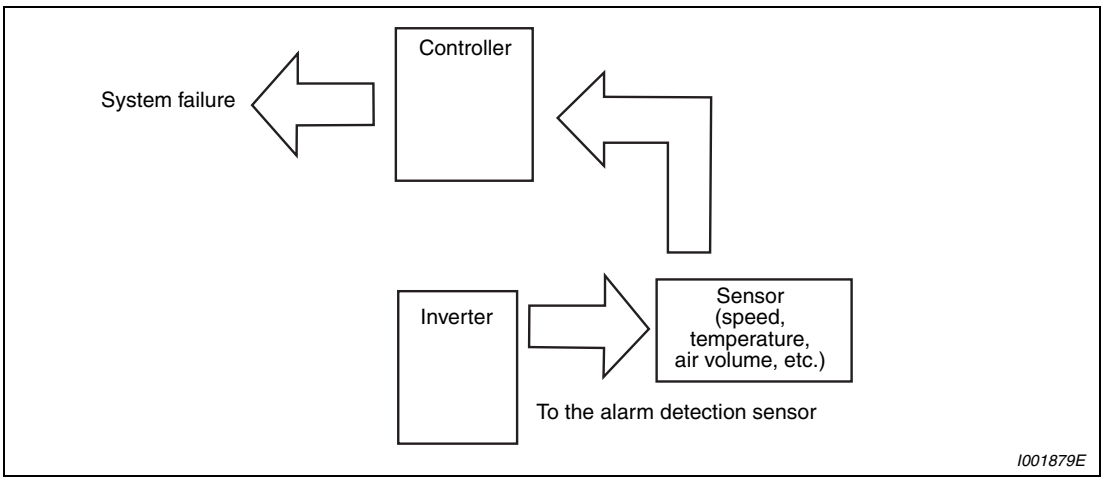

Fig. 4-4: *Backup method outside the inverter*

Check if there is no gap between the actual speed and commanded speed by comparing the inverter speed command and detected speed of the speed detector.

4.2 Drive the motor

The inverter needs frequency command and start command. Refer to the flow chart below to perform setting.

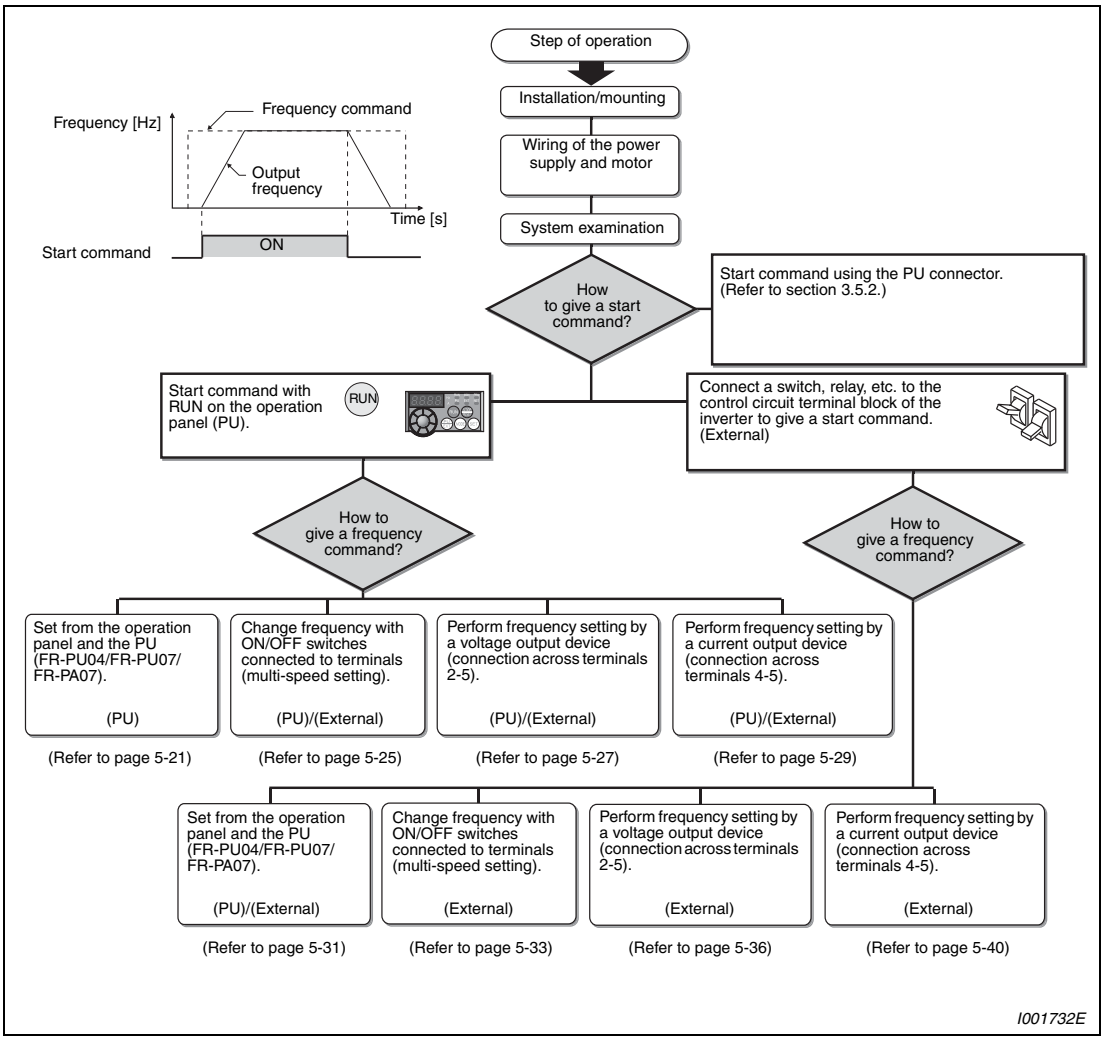

Fig. 4-5: *Steps of operation*

Check the following items before powering on the inverter:

- Check that the inverter is installed correctly in a correct place. (Refer to section 2.3.)
- Check that wiring is correct. (Refer to section 3.2.)
- Check that no load is connected to the motor.

NOTES

When protecting the motor from overheat by the inverter, set Pr. 9 "Electronic thermal O/L relay". (Refer to section 5.1.1.)

When the rated frequency of the motor is 60Hz, set Pr. 3 "Base frequency" (Refer to section 5.1.2.)

4.3 Operation panel

4.3.1 Parts of the operation panel

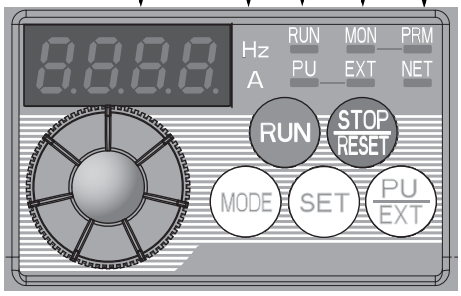

LED-Display
4-digit 7-segment display for operational values, parameter numbers, etc. ①

Unit Indication
LED to indicate the current unit
- Hz: Frequency
- A: Current
- Off: Voltage
- Flicker: Set frequency

Rotation Direction Indication
Lit or flicker during inverter operation
- RUN is lit: Forward rotation
- RUN flickering slowly: Reverse rotation
- RUN flickering fast: Start command is given but the frequency command is missing

Monitor Indication
Lit to indicate the monitoring mode.

Parameter Setting Mode
Lit to indicate the parameter setting mode.

Operation Mode Indication
LED to indicate the operation mode
- PU operation mode (PU)
- External operation mode (EXT) (lit at power-ON at initial setting.)
- Network operation mode (NET)
- Combined operation mode (PU and EXT) These turn OFF when command source is not on operation panel (Refer to section 6.17.3).

I001993E

Fig. 4-6: *Operation panel of the FR-D700 SC*

① The number of digits displayed on the operation panel is four. Only the upper four digits of values can be displayed and set. If the values to be displayed have five digits or more including decimal places, the fifth or later numerals can not be displayed nor set.
When 50Hz is set, 50.00 is displayed. When 120Hz is set, 120.0 is displayed and second decimal place is not displayed nor set.

Key	Function	Description
	Digital dial	Used to change the frequency setting and parameter values. Press to display the following: ● Displays the set frequency in the monitor mode ● Currently set value is displayed during calibration ● Displays the order in the faults history mode
RUN	Rotation direction	RUN command for forward/reverse rotation. The rotation direction can be selected by setting Pr. 40.
STOP RESET	Stop operation/ Fault reset	● Used to stop RUN command. ● Fault can be reset when protective function is activated (fault).
MODE	Mode switch over	Used to change each setting mode. ● Pressing PU/EXT simultaneously changes the operation mode (refer to section 4.3.3). ● Pressing for a while (more than 2s) can lock operation (refer to section 4.3.4).
SET	Write settings	If pressed during operation, monitor changes as below: Running frequency → Output current → Output voltage
PU EXT	Operation mode switch over	Used to switch between the PU and external operation mode. When using the external operation mode (operation using a separately connected frequency setting potentiometer and start signal), press this key to light up the EXT indication. (Press MODE simultanesouly (min. 0.5s) or change Pr. 79 setting to change to combined mode.) PU: PU operation mode EXT: External operation mode (The motor can be stopped via the parameter unit by the STOP/RESET key. The display on the control panel switches to PS.)

Tab. 4-3: *Keys of the operation panel*

4.3.2 Basic operation (factory setting)

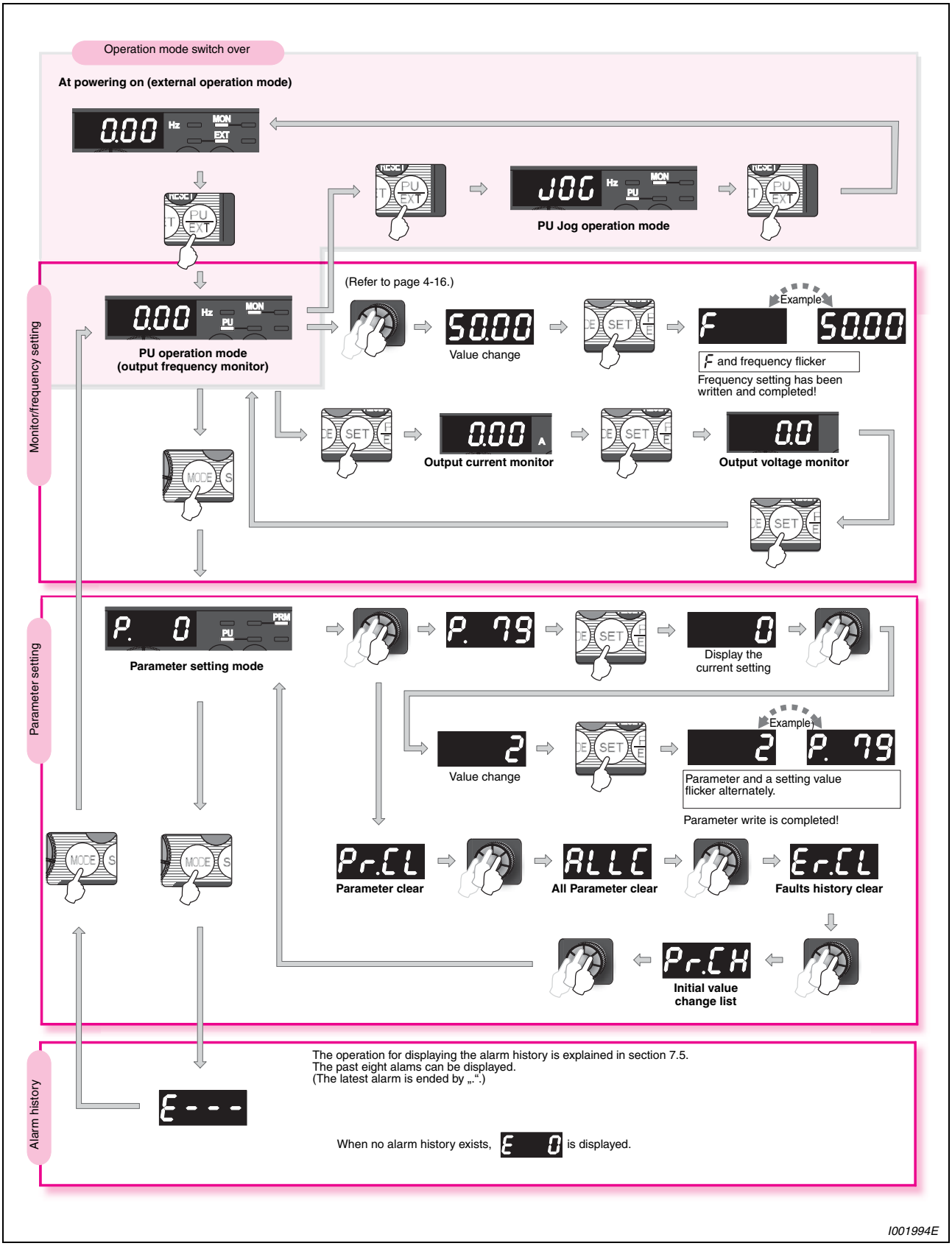

Fig. 4-7: Overview of the basic functions of the operation panel

4.3.3 Easy operation mode setting (easy setting mode)

A frequency inverter can be controlled alone via the parameter unit, through external signals (switch, SPC outputs, external setpoint sources, etc.) or through a combination of external signals and inputs to the parameter unit. The choice of operation mode is done by setting parameter 79. (Refer to section 5.1.6.)

Setting of Pr. 79 "Operation mode selection" according to combination of the start command and speed command can be easily made.

In the following example the parameter is set to the value "3" so that the motor is started by signals to the STF and STR terminals and the speed can be adjusted using the digital dial on the operation panel.

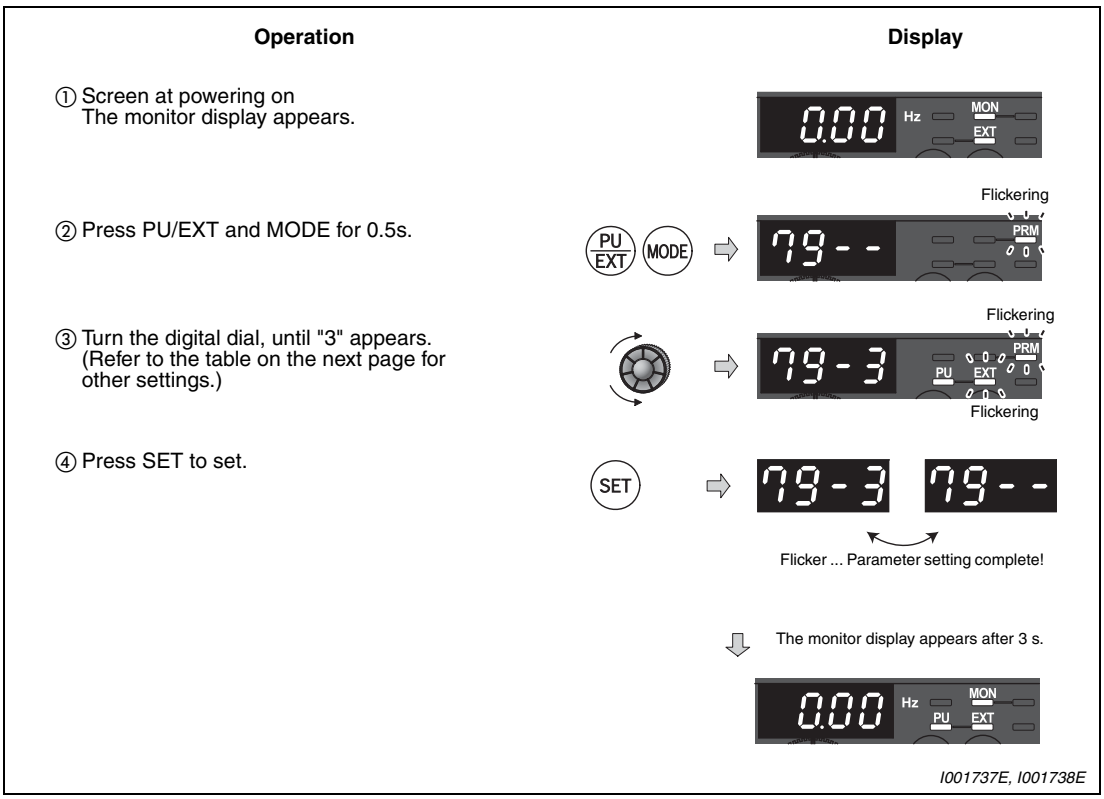

Fig. 4-8: *One can immediately change parameter 79 by simultaneously pressing the PU/EXT and MODE keys.*

NOTES

Press MODE before pressing SET to return to the monitor display without setting.
In this case, the mode changes to external operation mode when performed in the PU operation mode (PU JOG operation mode) and PU operation mode when performed in the external operation mode.

Reset can be made with STOP/RESET.

Operation Mode	Operation Panel Indication	Operation Method	
		Start Command	Frequency Command
PU Modes	Flickering 79-1 PRM PU Flickering	RUN	
External operation mode	Flickering 79-2 PRM EXT Flickering	External (STF-, STR)	External (Analog signal at terminal 2 (voltage) or 4 (current))
Combined operation mode 1	Flickering 79-3 PRM PU EXT Flickering	External (STF-, STR)	
Combined operation mode 2	Flickering 79-4 PRM PU EXT Flickering	RUN	External (Analog signal at terminal 2 (voltage) or 4 (current))

Tab. 4-4: *Operation modes and operation panel indication*

Possible faults:

- "Er1" ("Write disable error") is displayed
  - Parameter write is disabled with "1" set in Pr. 77.
- "Er2" is displayed
  - Setting can not be made during operation. Stop the motor with the STOP/RESET key or by switching off the STR/STF signal.
- The priorities of the frequency commands when Pr. 79 = "3" are: "Multi-speed operation (RL/RM/RH/REX) > PID control (X14) > terminal 4 analog input (AU) > digital input from the operation panel".

4.3.4 Operation lock

Operation using the digital dial and key of the operation panel can be made invalid to prevent parameter change and unexpected start and stop.

Operation lock

- Set "10" or "11" in Pr. 161, then press the MODE key for 2s to make the digital dial and key operation invalid.
- When the digital dial and key operation is made invalid, "HOLD" appears on the operation panel.
- When the digital dial and key operation are invalid, "HOLD" appears if the digital dial or key operation is performed. (When the digital dial or key operation is not performed for 2s, the monitor display appears.)

Operation unlock

To make the digital dial and key operation valid again, press the MODE key for 2s.

NOTES

The STOP/RESET key is valid even in the operation lock status.

Set "10" or "11" (key lock mode valid) in Pr. 161 "Frequency setting/key lock operation selection".

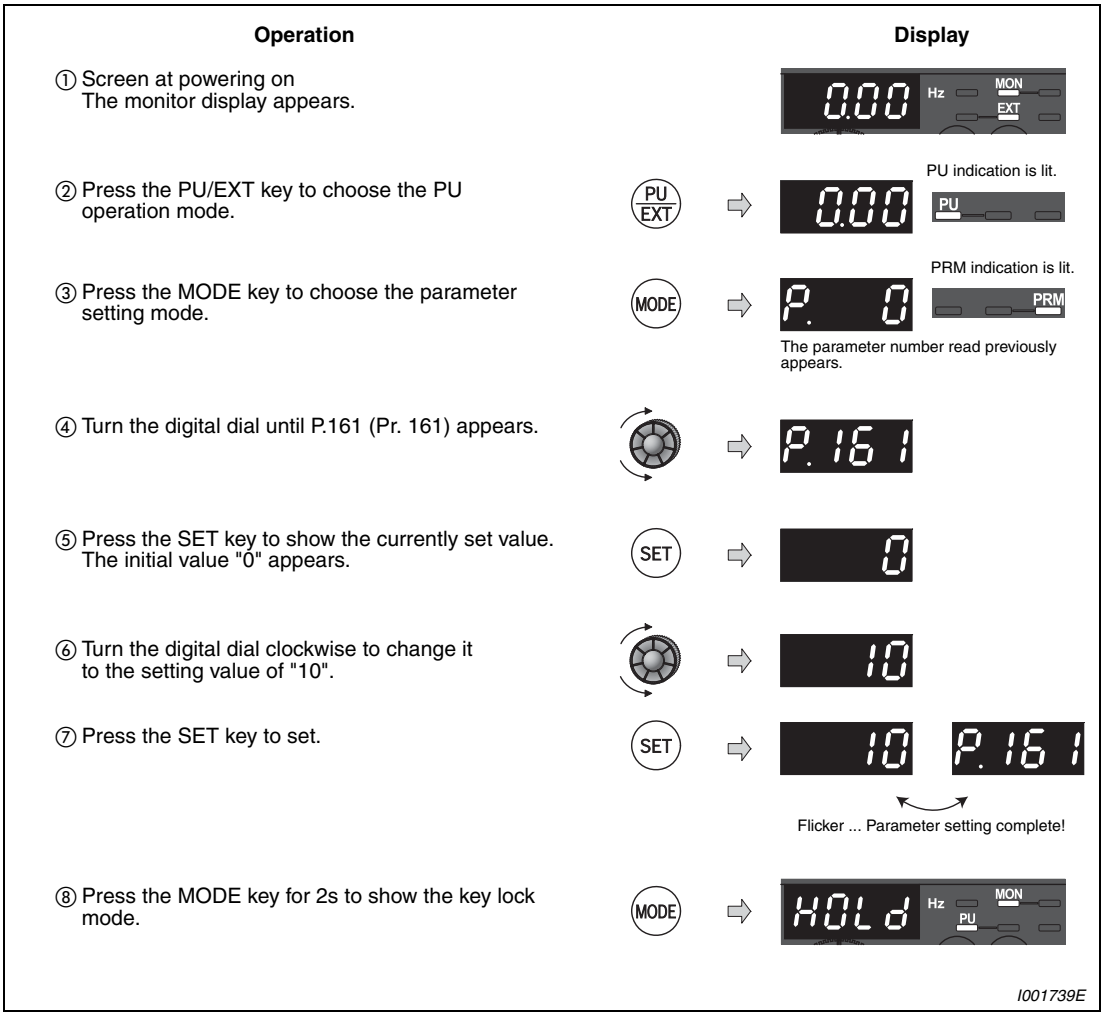

Fig. 4-9: *Operation lock*

4.3.5 Monitoring of output current and output voltage

Monitor display of output frequency, output current and output voltage can be changed by pushing the SET key during monitoring mode.

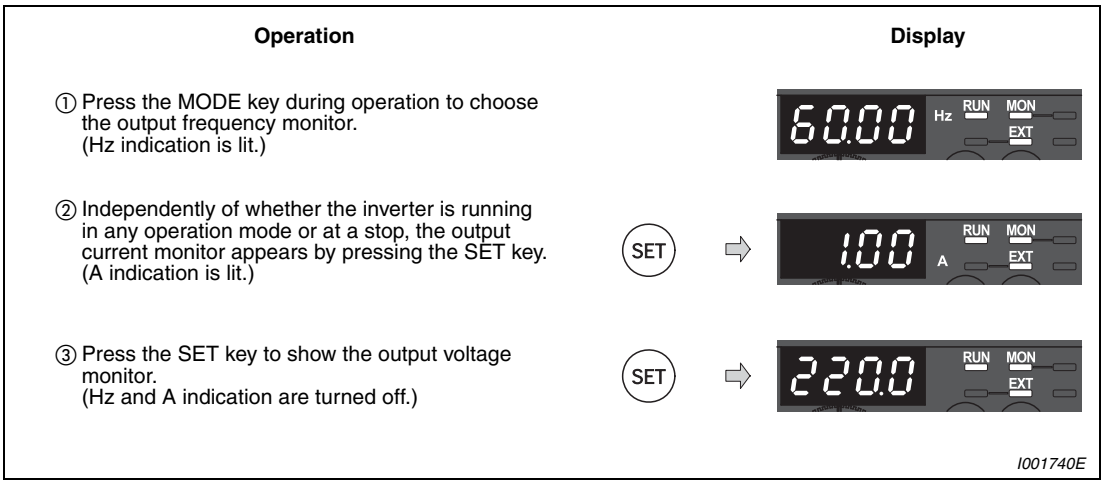

Fig. 4-10: *Monitoring of output current and output voltage*

4.3.6 First priority monitor

Hold down the SET key for 1s to set monitor description to be appeared first in the monitor mode.

To return to the output frequency monitor, hold down the SET key for 1s after displaying the output frequency monitor.

4.3.7 Digital dial push

Appears when PU operation mode or external/PU combined operation mode 1 is selected (Pr. 79 = "3").

Push the digital dial to display the set frequency currently set.

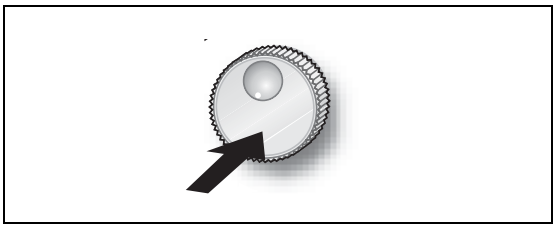

Fig. 4-11:
Display the set frequency currently set

I001067E

4.3.8 Change the parameter setting value

Example ▽ Change the Pr. 1 "Maximum frequency" setting from 120Hz to 50Hz.

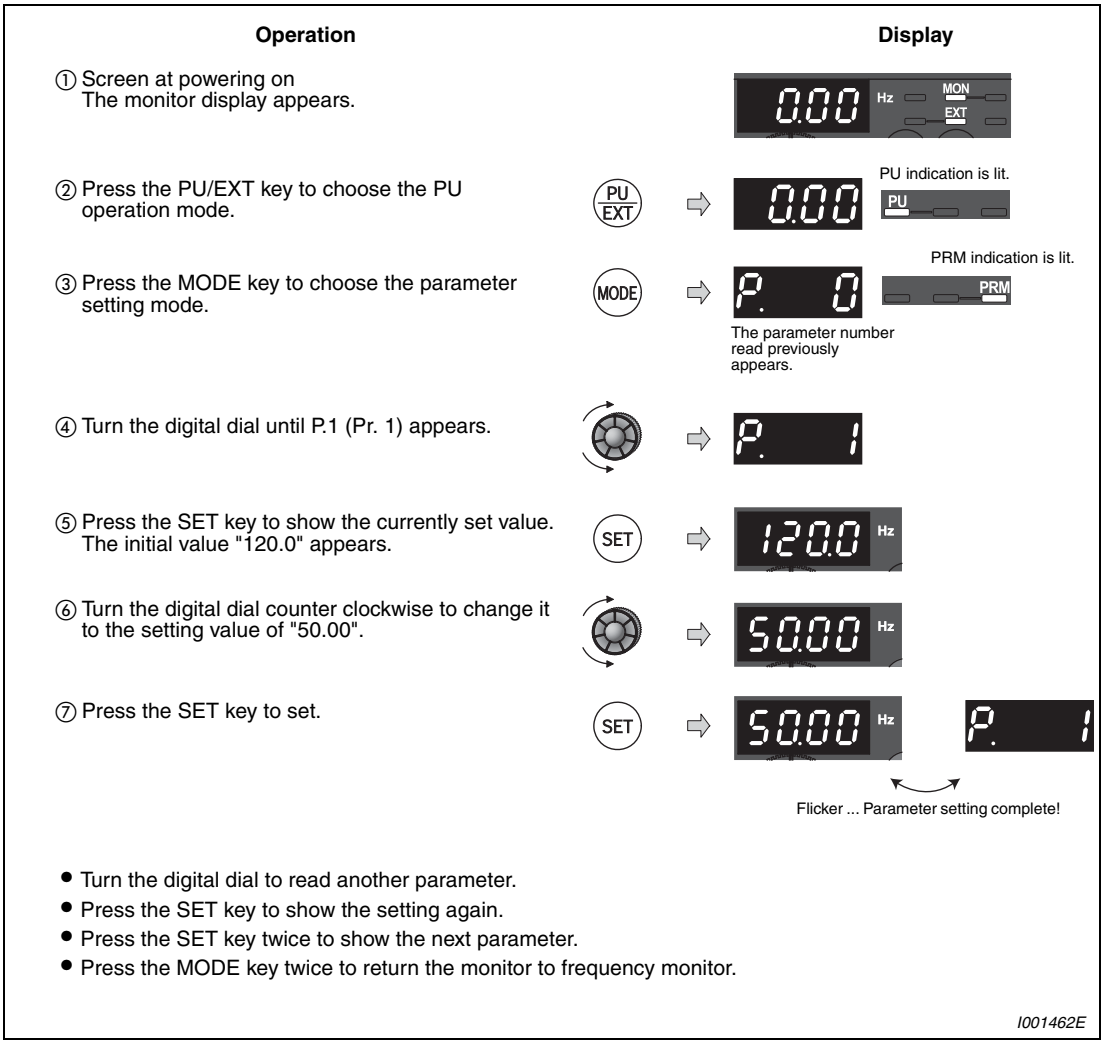

Fig. 4-12: *Setting the maximum output frequency*

Possible faults:

- "Er1", "Er2", "Er3" or "Er4" is displayed.
  - The error indication means:

    Er1: Write disable error
    Er2: Write error during operation
    Er3: Calibration error
    Er4: Mode designation error

    For details refer to section 7.1.

4.3.9 Parameter clear/All Parameter clear

- Set "1" in Pr.CL "Parameter clear" or ALLC "all parameter clear" to initialize all parameters. (Parameters are not cleared when "1" is set in Pr. 77 "Parameter write selection".)
- Parameter clear returns all parameters except calibration parameters C1 (Pr. 901) to C7 (Pr. 905) and terminal function selection parameters to the initial values.
- Refer to the extended parameter list Tab. 6-1 for parameters cleared with this operation.

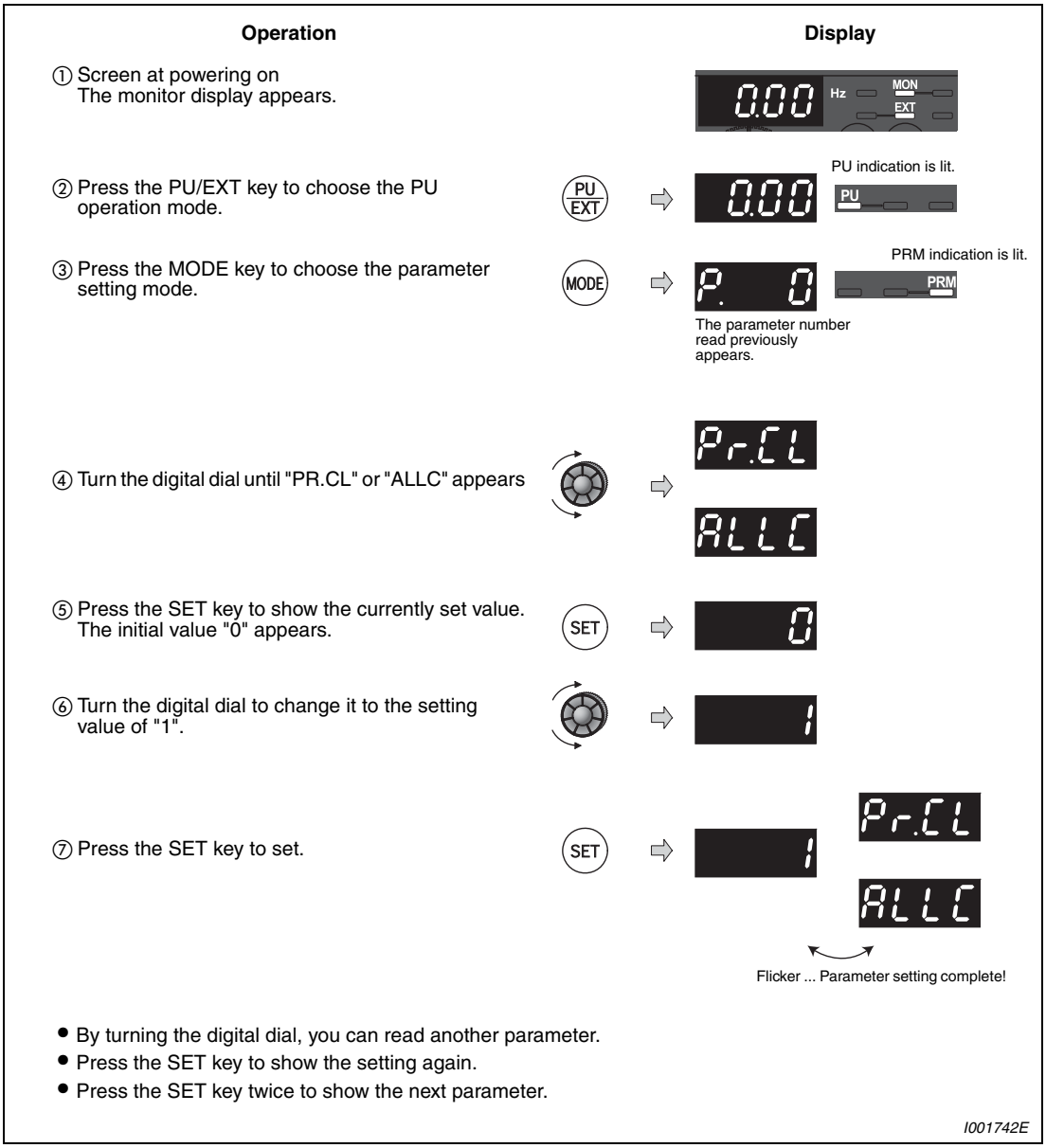

Fig. 4-13: *Parameter clear*

Possible faults:

- "1" and "Er4" are displayed alternately.
  - The inverter is not in the PU operation mode. Press the PU/EXT key. The PU indication is lit and the monitor (4 digit LED) displays "1". (When Pr. 79 = "0" (initial value)). Carry out operation from step ⑥ again.

4.3.10 Initial value change list

Displays and sets the parameters changed from the initial value.

NOTES

Calibration parameters (C1 (Pr. 901) to C7 (Pr. 905)) are not displayed even they are changed from the initial settings.

Only simple mode parameter is displayed when simple mode is set (Pr. 160 "Extended function display selection" = 9999 (displays only the simple mode parameters)).

Pr. 160 "Extended function display selection" is displayed independently of whether the setting value is changed or not.

When parameter setting is changed after creating the initial value change list, the setting will be reflected to the initial value change list next time.

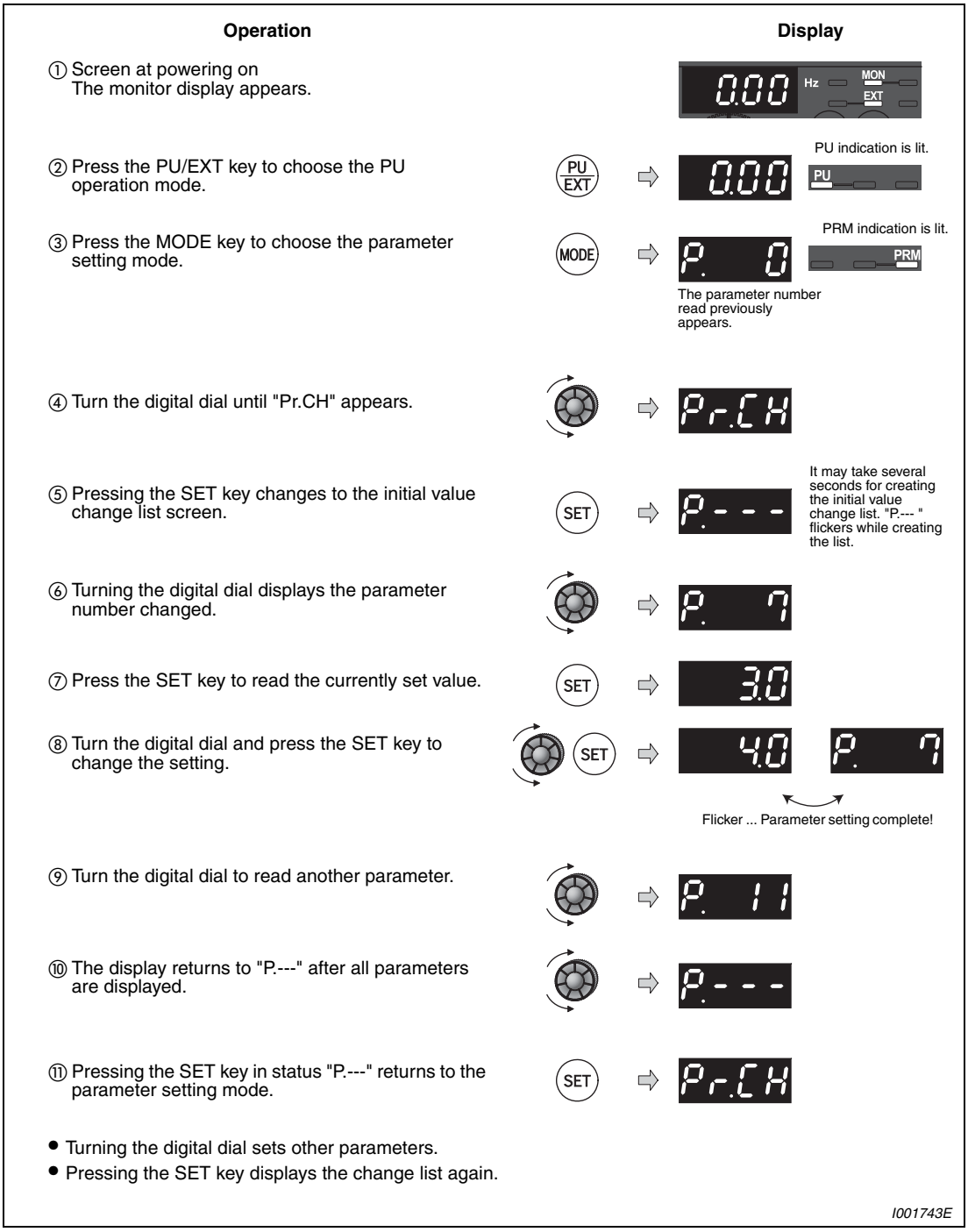

Fig. 4-14: *Initial value change list*

5 Basic settings

5.1 Simple mode parameter list

For simple variable-speed operation of the inverter, the initial setting of the parameters may be used as they are. Set the necessary parameters to meet the load and operational specifications. Parameter setting, change and check can be made from the operation panel. For details of parameters, refer to chapter 6.

NOTE

All parameters are displayed with the initial setting of Pr. 160 "Extended function display selection". For details of Pr. 160 refer to section 6.16.4.

Pr. 160	Description
0 (Initial value)	Displays simple mode and extended mode parameters.
9999	Displays only the simple mode parameters.

Tab. 5-1: *Setting of parameter 160*

Pr.	Name		Incre-ments	Initial Value	Range	Description	Refer to Page
0	Torque boost		0.1%	6/4/3% ①	0–30%	Set to increase a starting torque or when the motor with a load will not rotate, resulting in an alarm (OL) and a trip (OC1).	5-5
1	Maximum frequency		0.01Hz	120Hz	0–120Hz	Set when the maximum output frequency need to be limited.	5-7
2	Minimum frequency		0.01Hz	0Hz		Set when the minimum output frequency need to be limited.	
3	Base frequency		0.01Hz	50Hz	0–400Hz	Check the motor rating plate.	5-4
4	Multi-speed setting	RH	0.01Hz	50Hz	0–400Hz	Set when changing the preset speed in the parameter with a terminal.	5-33
5		RM		30Hz			
6		RL		10Hz			
7	Acceleration time		0.1s	5/10s ②	0–3600s	Acceleration/deceleration time can be set.	5-9
8	Deceleration time			5/10s ②			
9	Electronic thermal O/L relay		0.01A	Rated inverter current	0–500A	Protect the motor from overheat by the inverter. Set the rated motor current.	5-2
79	Operation mode selection		1	0	0/1/2/3/4/6/7	Select the start command location and frequency command location.	5-11
125	Frequency setting gain frequency	Terminal 2	0.01Hz	50Hz	0–400Hz	Frequency for the maximum value of the potentiometer (at 5V) can be changed.	5-39
126		Terminal 4				Frequency at 20mA input can be changed.	5-42
160	Extended function display selection		1	0	0/9999	Access to extended parameter display	6-168

Tab. 5-2: *Simple mode parameters*

① Initial values differ according to the inverter capacity:
6%: FR-D720S-042SC or less, FR-D740-022SC or less
4%: FR-D720S-070SC and 100SC, FR-D740-036SC to 080SC
3%: FR-D740-120SC and 160SC

② Initial values differ according to the inverter capacity:
5s: FR-D720S-008SC to 100SC, FR-D740-080SC or less
10s: FR-D740-120SC and 160SC

5.1.1 Overheat protection of the motor by the inverter

Set this parameter when using a motor other than the Mitsubishi standard motor (SF-JR) and Mitsubishi constant torque motor (SF-HRCA). Set the rated motor current in Pr. 9 "Electronic thermal O/L relay" to protect the motor from overheat.

Pr. No.	Name	Initial Value	Setting Range	Description
9	Electronic thermal O/L relay	Rated inverter current ①	0–500A	Set the rated motor current.

① Refer to appendix A for the rated inverter current value.

Example ▽ Change the Pr. 9 "Electronic thermal O/L relay" setting to 5A according to the motor rated current.

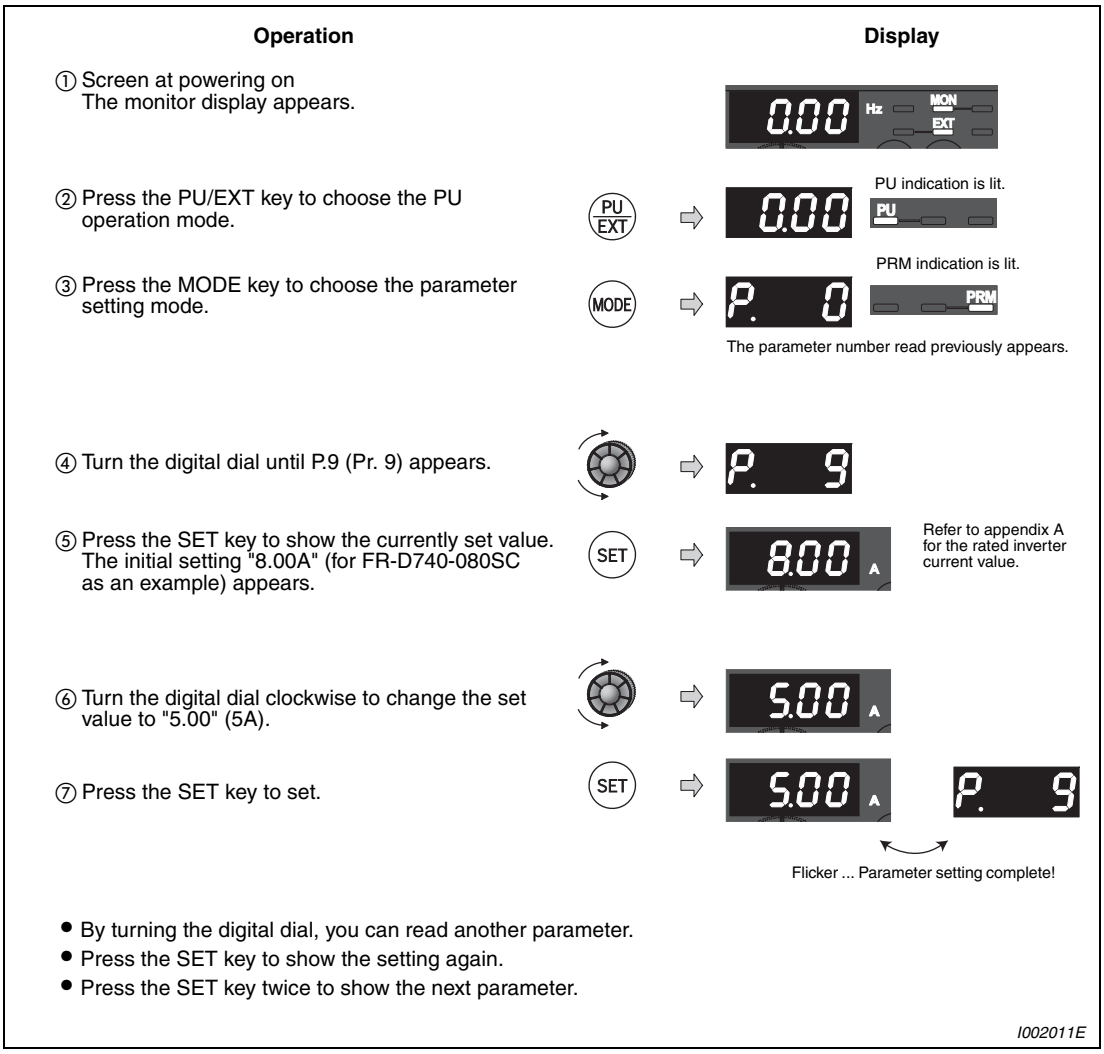

Fig. 5-1: *Setting of the electronic thermal O/L relay*

△

NOTES

Protective function by electronic thermal relay function is reset by inverter power reset and reset signal input. Avoid unnecessary reset and power-off.

When two or more motors are connected to the inverter, they cannot be protected by the electronic thermal relay function. Install an external thermal relay to each motor.

When the difference between the inverter and motor capacities is large and the setting is small, the protective characteristics of the electronic overcurrent protection will be deteriorated. Thermal motor protection must be ensured by external motor protection (e.g. PTC element).

A special motor cannot be protected by the electronic thermal relay function. Use an external thermal relay.

Electronic thermal relay does not work when 5% or less of inverter rated current is set to electronic thermal relay setting.

5.1.2 When the rated motor frequency is 60Hz (Pr. 3) V/F

First, check the motor rating plate. If a frequency given on the rating plate is "60Hz" only, always set Pr. 3 "Base frequency" to "60Hz". Leaving the base frequency unchanged from "50Hz" may make the voltage low and the torque insufficient. It may result in an inverter trip due to overload.

Pr. No.	Name	Initial Value	Setting Range	Description
3	Base frequency	50Hz	0–400Hz	Set the rated motor frequency.

Example ▽ Change Pr. 3 "Base frequency" to 60Hz according to the motor rated frequency.

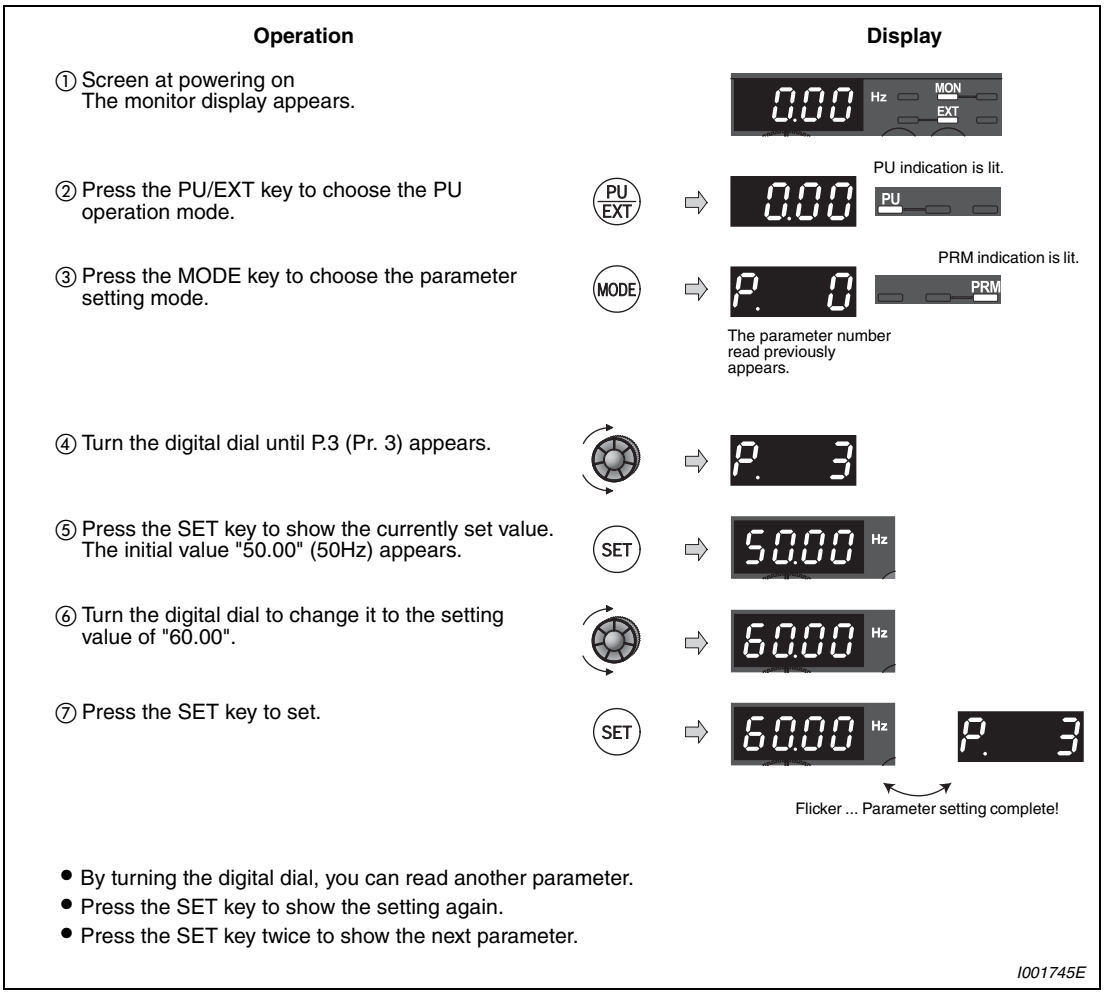

Fig. 5-2: *Setting the base frequency*

△

5.1.3 Increase the starting torque (Pr. 0) V/F

Set this parameter when the motor with a load does not rotate, an alarm OL is output, resulting in an inverter trip due to OC1, etc.

Pr. No.	Name	Initial Value		Setting Range	Description
0	Torque boost	FR-D720S-008SC to 042SC FR-D740-012SC and 022SC	6%	0–30%	Motor torque in the low-frequency range can be adjusted to the load to increase the starting motor torque.
		FR-D720S-070SC and 100SC FR-D740-036SC to 080SC	4%		
		FR-D740-120SC and 160SC	3%		

Example ▽ When the motor with a load does not rotate, increase the Pr. 0 value 1% by 1% unit by looking at the motor movement. The guideline is for about 10% change at the greatest.

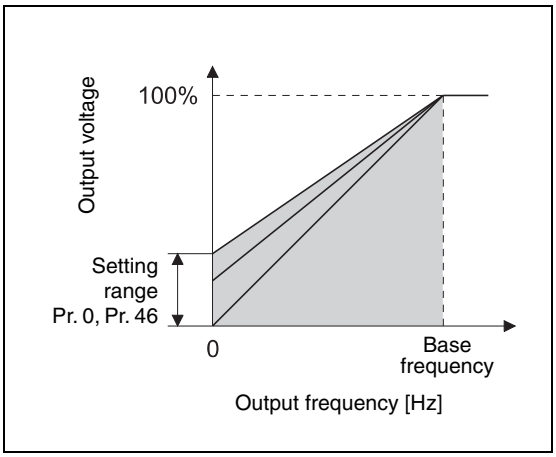

Fig. 5-3:
Relation between output frequency and output voltage

I001098E

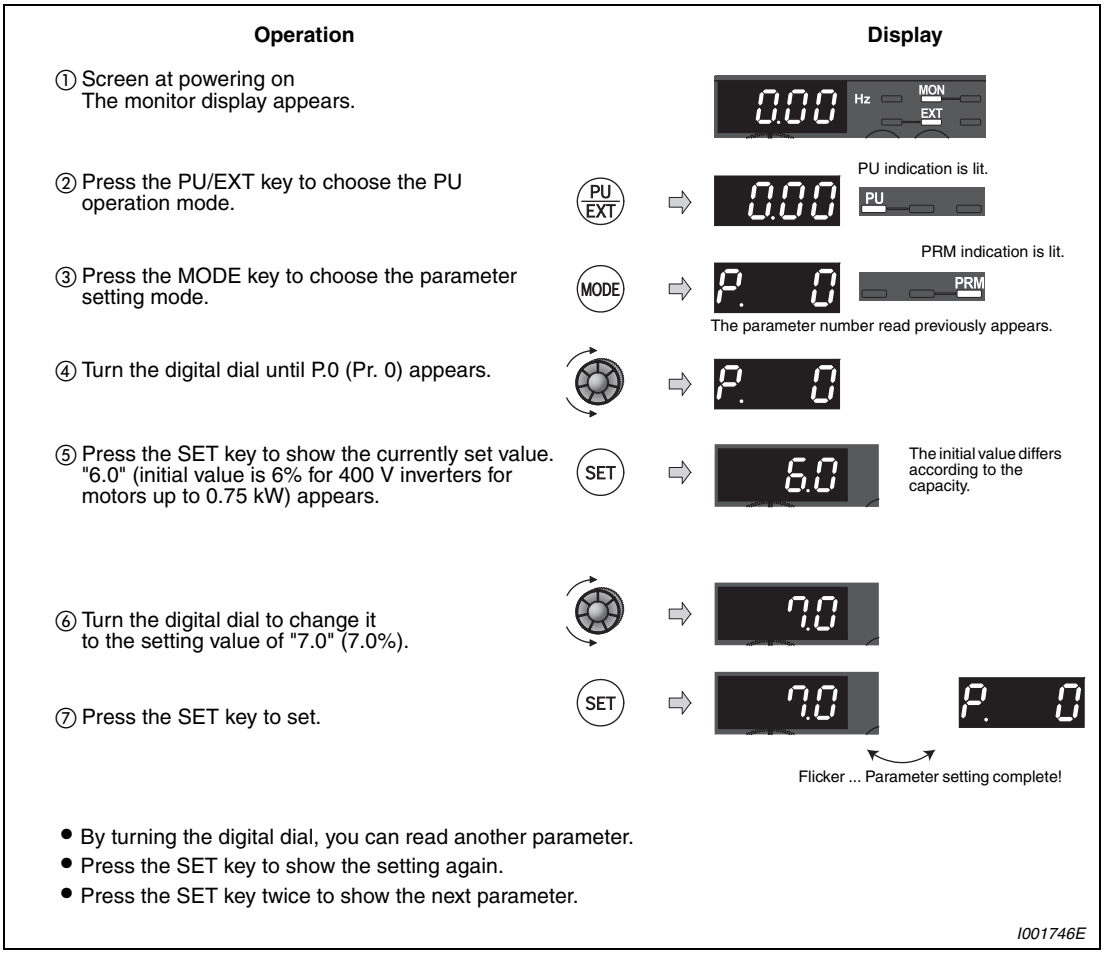

Fig. 5-4: *Setting the starting torque*

△

NOTES

A too large setting will cause the motor to overheat, resulting in an overcurrent trip (OL (overcurrent alarm) then E.OC1 (overcurrent shutoff during acceleration)), thermal trip (E.THM (Motor overload shutoff), and E.THT (Inverter overload shutoff)). When an error (E.OC1) occurs, release the start command, and decrease the value 1% by 1%. (Refer to page 7-9.)

If the inverter still does not operate properly after the above measures, adjust the acceleration/deceleration setting or activate the vector control function by Pr. 80 "Advanced magnetic flux vector control". (Refer to section 6.2.2.)

5.1.4 Limit the maximum and minimum output frequency (Pr. 1, Pr. 2)

Pr. No.	Name	Initial Value	Setting Range	Description
1	Maximum frequency	120Hz	0–120Hz	Set the upper limit of the output frequency.
2	Minimum frequency	0Hz	0–120Hz	Set the lower limit of the output frequency.

Example ▽ You can limit the motor speed. Limit the frequency set by the potentiometer, etc. to 50Hz maximum. (Set "50" Hz to Pr. 1 "Maximum frequency".)

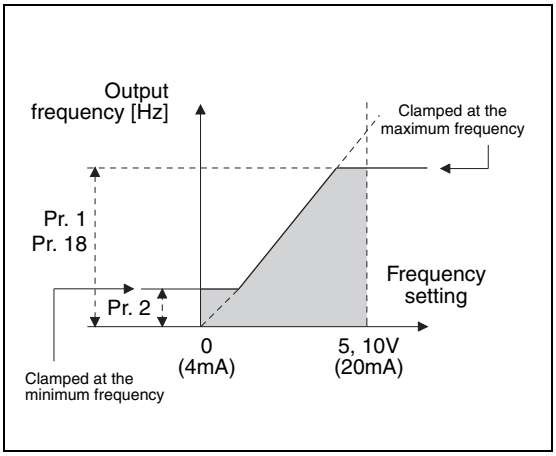

Fig. 5-5:
Minimum and maximum output frequency

I001100E

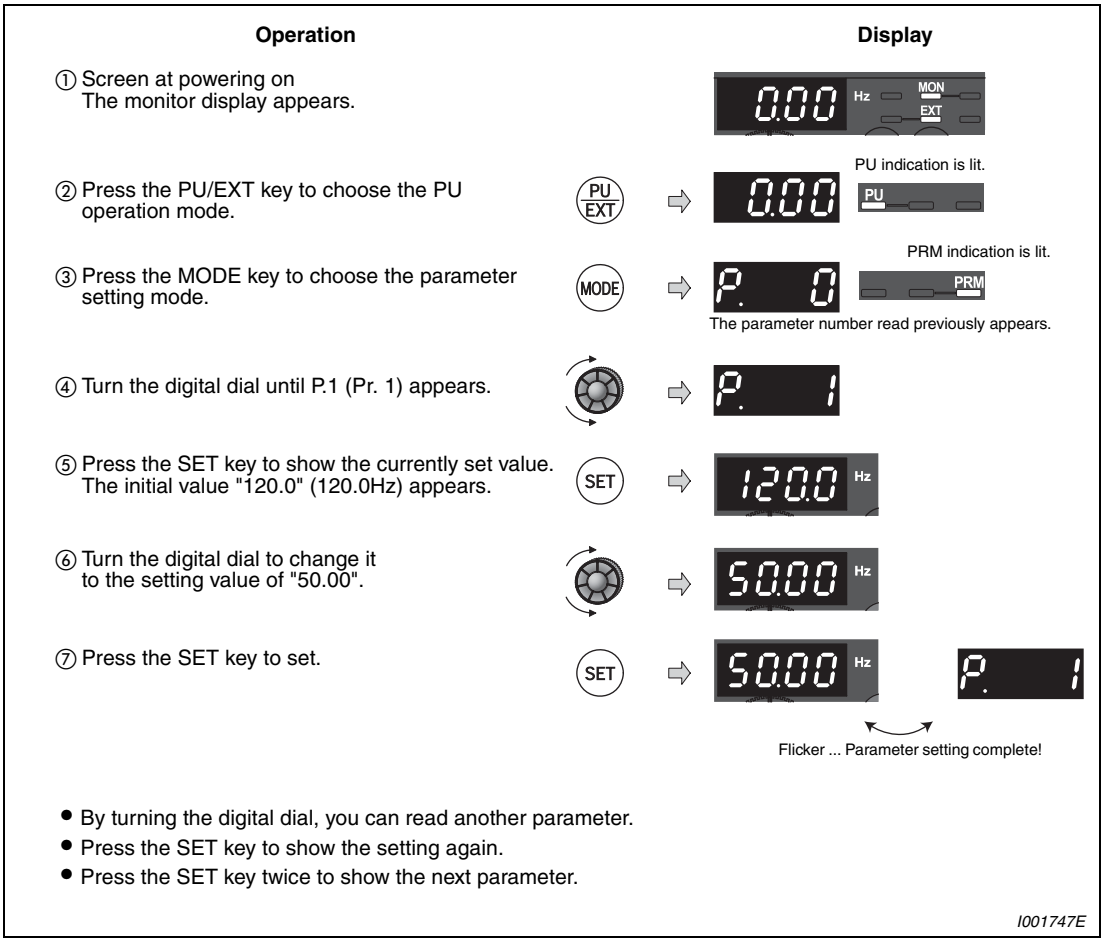

Fig. 5-6: *Setting the maximum frequency*

△

NOTES

The output frequency is clamped by the Pr. 2 setting even the set frequency is lower than the Pr. 2 setting (The frequency will not decrease to the Pr. 2 setting.) Note that Pr. 15 "Jog frequency" has higher priority than the minimum frequency.

When the Pr. 1 setting is changed, frequency higher than the Pr. 1 setting can not be set by the digital dial.

When performing a high speed operation at 120Hz or more, setting of Pr. 18 "High speed maximum frequency" is necessary. (Refer to section. 6.3.1.)

CAUTION:
If the Pr. 2 setting is higher than the Pr. 13 "Starting frequency" value, note that the motor will run at the set frequency according to the acceleration time setting by merely switching the start signal on, without entry of the command frequency.

5.1.5 Change the acceleration/deceleration time (Pr. 7, Pr. 8)

Set in Pr. 7 "Acceleration time" a larger value for a slower speed increase and a smaller value for a faster speed increase.

Set in Pr. 8 "Deceleration time" a larger value for a slower speed decrease and a smaller value for a faster speed decrease.

Pr. No.	Name	Initial Value		Setting Range	Description
7	Acceleration time	FR-D720S-008SC to 100SC FR-D740-012SC to 080SC	5s	0–3600 s	Set the motor acceleration time.
		FR-D740-120SC and 160SC	10s		
8	Deceleration time	FR-D720S-008SC to 100SC FR-D740-012SC to 080SC	5s	0–3600 s	Set the motor deceleration time.
		FR-D740-120SC and 160SC	10s		

NOTE

Too short acceleration/deceleration times may lead to an inverter shutoff with error message (E.THT, E.THM, E.OCT, E.OVT etc.).

Example ▽ Change the Pr. 7 "Acceleration time" setting from "5s" to "10s".

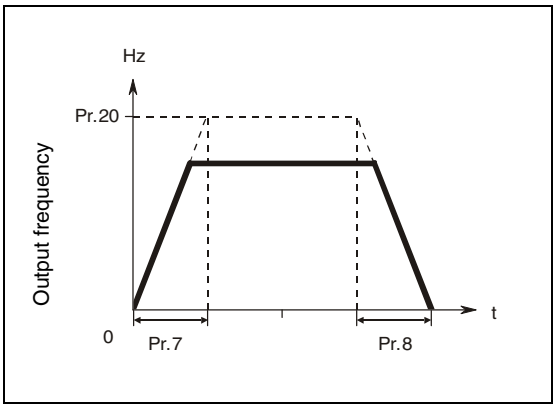

Fig. 5-7:
Acceleration/deceleration time

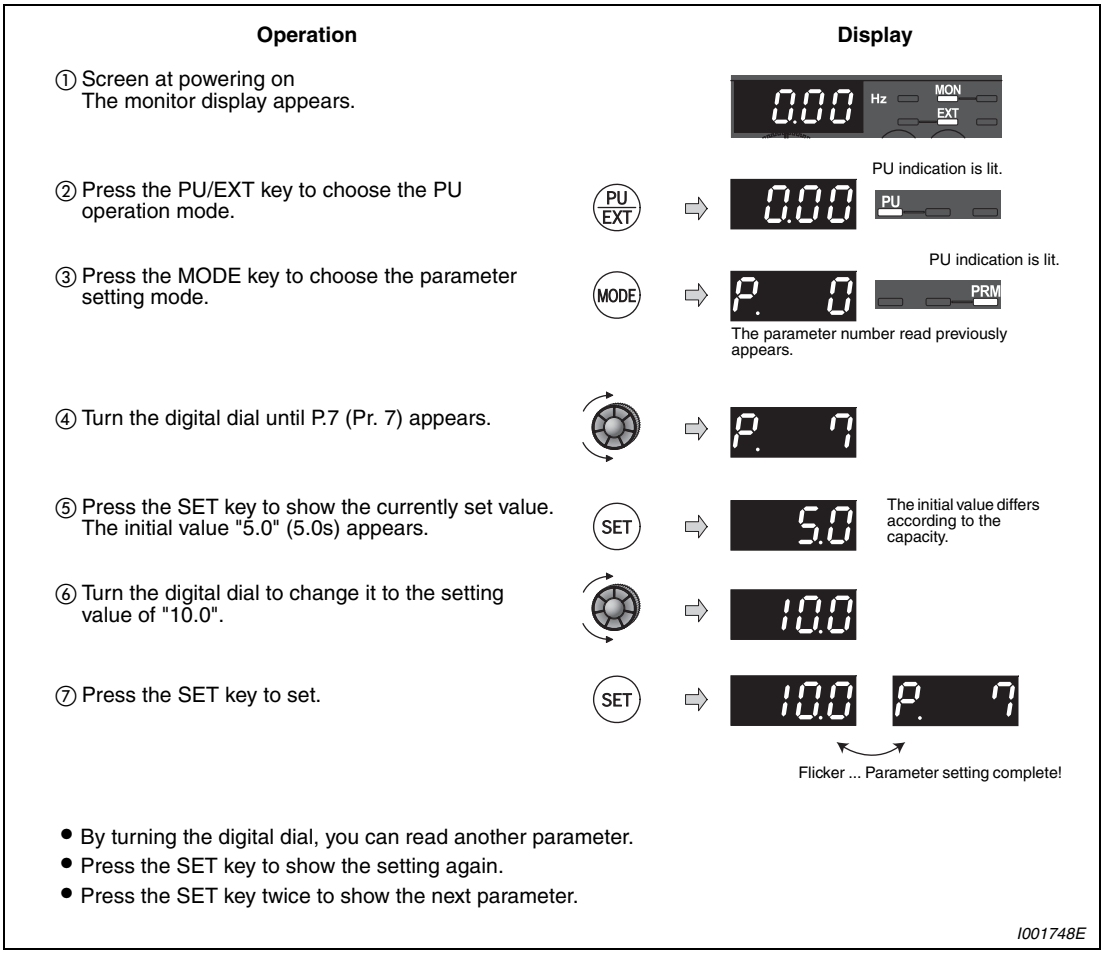

Fig. 5-8: *Setting the acceleration time*

△

5.1.6 Operation mode selection (Pr. 79)

Select the operation command location and frequency command location.

Pr. No.	Name	Initial Value	Setting Range	Description		LED Indication : OFF : ON
79	Operation mode selection	0	0	External/PU switch over mode Press the PU/EXT key to switch between the PU and external operation mode. (Refer to section 4.3.3.) At power on, the inverter is in the external operation mode.		External operation mode EXT PU operation mode PU
			1	PU operation mode		PU
			2	Fixed to external operation mode Operation can be performed by switching between the external and Net operation mode.		External operation mode EXT NET operation mode NET
			3	External/PU combined operation mode 1		PU EXT
				Running frequency	**Start signal**	
				Operation panel and PU (FR-PU04/FR-PU07) setting or external signal input (multi-speed setting, across terminals 4-5 (valid when AU signal turns on)).	External signal input (terminal STF-, STR)	
			4	External/PU combined operation mode 2		
				Running frequency	**Start signal**	
				External signal input (Terminal 2, 4, JOG, multi-speed selection, etc.)	Input using the RUN key of the operation panel or FWD/REV of the PU (FR-PU04/FR-PU07)	
			6	Switch-over mode Switch among PU operation, external operation, and NET operation while keeping the same operation status.		PU operation mode PU External operation mode EXT NET operation mode NET
			7	External operation mode (PU operation interlock) X12 signal ON ①: Operation mode can be switched to the PU operation mode. (output stop during external operation) X12 signal OFF ①: Operation mode can not be switched to the PU operation mode.		PU operation mode PU External operation mode EXT

① For the terminal used for the X12 signal (PU operation interlock signal) input, assign "12" in Pr. 178 to Pr. 182 "Input terminal function selection" to assign functions (refer to section 6.9.1). When the X12 signal is not assigned, function of the MRS signal switches from MRS (output stop) to PU operation interlock signal.

NOTE

Setting values 0, 1, 2, 3 and 4 for Pr. 79 can be changed in the easy operation mode. (Refer to section 4.3.3.)

5.1.7 Large starting torque and low speed torque are necessary (General-purpose magnetic flux vector control) (Pr. 9, Pr. 71, Pr. 80) GP MFVC

Large starting torque and low speed torque are available with general-purpose magnetic flux vector control.

What is general-purpose magnetic flux vector control?

The low speed torque can be improved by providing voltage compensation to flow a motor current which meets the load torque. With setting slip compensation (Pr. 245 to Pr. 247), output frequency compensation (slip compensation) is made so that the actual motor speed goes closer to a speed command value. Effective when load fluctuates drastically, etc.

General-purpose magnetic flux vector control of FR-D700 SC series is the same function as the FR-E500 series.

Pr. No.	Name	Initial Value	Setting Range	Description
9	Electronic thermal O/L relay	Rated current ①	0–500A	Set the rated motor current.
71	Applied motor	0	0/1/3/13/23/40/43/50/53	By selecting a standard motor or constant-torque motor, thermal characteristic and motor constants of each motor are set.
80	Motor capacity	9999	0.1–7.5kW	Set the applied motor capacity.
			9999	V/f Control

The above parameters can be set when Pr. 160 = 0.

① Refer to appendix A for the rated inverter output current.

NOTES

If the following conditions are not satisfied, select V/F control since malfunction such as insufficient torque and uneven rotation may occur.

- The motor capacity should be equal to or one rank lower than the inverter capacity. (The capacity should be 0.1kW or more.)
- Motor to be used is any of Mitsubishi standard motor, high efficiency motor (SF-JR, SF-HR 0.2kW or more) or Mitsubishi constant-torque motor (SF-JRCA (four-pole), SF-HRCA 0.2kW to 7.5kW). When using a motor other than the above (other manufacturer's motor), perform offline auto tuning without fail.

Single-motor operation (one motor run by one inverter) should be performed.

The wiring length from inverter to motor should be within 30m. Otherwise, the drive behaviour may be impaired or the offline auto tuning may be cancelled and an appropriate alarm issued. Perform offline auto tuning in the state where wiring work is performed when the wiring length exceeds 30m.
Permissible wiring length between inverter and motor differs according to the inverter capacity and setting value of Pr. 72 "PWM frequency selection" (carrier frequency). (Refer to page 3-11).

Selection method of General-purpose magnetic flux vector control

Perform secure wiring.
(Refer to section 3.2.)

↓

Set the motor. (Pr. 71) (Refer to page 5-12.)

Motor			Pr. 71 ①	Remarks
Mitsubishi	Standard motor, high efficiency motor	SF-JR	0	Initial value
		SF-HR	40	—
		Others	3	Offline auto tuning is necessary. ②
	Constant-torque motor	SF-JRCA 4P	1	—
		SF-HRCA 4P	50	—
		Others (SF-JRC, etc.)	13	Offline auto tuning is necessary. ②
Other manufac-turer's	Standard motor	—	3	Offline auto tuning is necessary. ②
	Constant-torque motor	—	13	

① For other settings of Pr. 71, refer to section 6.7.2.
② Refer to section 5.1.8 for offline auto tuning.

↓

Set the motor capacity (Pr. 80) (refer to page 5-12).

↓

Set motor capacity (kW) in Pr. 80 "Motor capacity".
(V/f control is performed when the setting is "9999" (initial value).

Set the operation command (refer to section 5.2).

↓

Select the start command and speed command.

1) Start command
   – Operation panel: Setting by pressing the RUN key
   – External command: Setting by forward rotation or reverse rotation command (terminal STF or STR)

2) Speed command
   – Operation panel: Setting by pressing the digital dial
   – External analog command (terminal 2 or 4):
     Give a speed command using the analog signal input to terminal 2 (or terminal 4).
   – Multi-speed command:
     The external signals (RH, RM, RL) may also be used to give speed command.

↓

Test run

- Perform offline auto tuning (Pr. 96, refer to section 5.1.8).
- Set motor excitation current (Pr. 82, refer to section 6.7.3).
- Set slip compensation (Pr. 245, Pr. 246, Pr. 247, refer to section 6.2.3).

Fig. 5-9: *Selection method of general-purpose magnetic flux vector control*

NOTES

Uneven rotation slightly increases as compared to the V/F control. It is not suitable for machines such as grinding machine and wrapping machine which requires less uneven rotation at low speed.

When a surge voltage suppression filter (FFR-DT or FFR-SI) is connected between the inverter and motor, output torque may decrease.

5.1.8 To exhibit the best performance of the motor performance (offline auto tuning) (Pr. 9, Pr. 71, Pr. 80, Pr. 82 to Pr. 84, Pr. 90, Pr. 96)

The motor performance can be maximized with offline auto tuning.

What is offline auto tuning?

When performing general-purpose magnetic flux vector control, the motor can be run with the optimum operating characteristics by automatically measuring the motor constants (offline auto tuning) even when each motor constants differs, other manufacturer's motor is used, or the wiring length is long.

Pr. No.	Name	Initial Value		Setting Range	Description
9	Electronic thermal O/L relay	Rated inverter output current ①		0–500 A	Set the rated motor current.
71	Applied motor	0		0/1/3/13/23/40/43/50/53	By selecting a standard motor or constant-torque motor, thermal characteristic and motor constants of each motor are set.
80	Motor capacity	9999		0,1–7.5kW	Applied motor capacity.
				9999	V/f control
82	Motor excitation current	9999		0–500A	Set motor excitation current (no load current).
				9999	Uses the Mitsubishi motor (SF-JR, SF-HR, SF-JRCA, SF-HRCA) constants.
83	Rated motor voltage	200V class	200V	0–1000V	Set the rated motor voltage (V).
		400V class	400V		
84	Rated motor frequency	50Hz		10–120Hz	Set the rated motor frequency (Hz).
90	Motor constant (R1)	9999		0–50Ω/9999	Tuning data (The value measured by offline auto tuning is automatically set.) 9999: Uses the Mitsubishi motor (SF-JR, SF-HR, SF-JRCA, SF-HRCA) constants.
96	Auto tuning setting/ status	0		0	Offline auto tuning is not performed
				11	For general-purpose magnetic flux vector control: Offline auto tuning is performed without motor running (motor constant R1 only)
				21	Offline auto tuning for V/f control (automatic restart after instantaneous power failure (with frequency search)) (refer to section 6.11.1)

The above parameters can be set when Pr. 160 = 0.

① Refer to appendix A for the rated inverter output current.

NOTES

This function is valid only when a value other than "9999" is set in Pr. 80 and General-purpose magnetic flux vector control is selected.

You can copy the offline auto tuning data (motor constants) to another inverter with the PU (FR-PU07).

Even when motors (other manufacturer's motor, SF-JRC, etc.) other than Mitsubishi standard motor, high efficiency motor (SF-JR, SF-HR 0.2kW or more), and Mitsubishi constant-torque motor (SF-JRCA, SF-HRCA four-pole 0.2kW to 7.5kW) are used or the wiring length is long, using the offline auto tuning function runs the motor with the optimum operating characteristics.

Tuning is enabled even when a load is connected to the motor. As the motor may run slightly, fix the motor securely with a mechanical brake or make sure that there will be no problem in safety if the motor runs (caution is required especially in elevator). Note that tuning performance is unaffected even if the motor runs slightly.

Reading/writing/copy of motor constants tuned by offline auto tuning are enabled.

The offline auto tuning status can be monitored with the operation panel and PU (FR-PU04/FR-PU07).

Do not connect a surge voltage suppression filter (FFR-DT or FFR-SI) between the inverter and motor.

Check the following before performing offline auto tuning:

- Make sure general-purpose magnetic flux vector control (Pr. 80) is selected (refer to section 5.1.7). (Tuning can be performed even under V/f control selected by turning on X18.)
- A motor should be connected. Note that the motor should be at a stop at a tuning start.
- The motor capacity should be equal to or one rank lower than the inverter capacity. (Capacity should be 0.1kW or more.)
- A high-slip motor, high-speed motor and special motor cannot be tuned.
  (The maximum frequency is 120Hz.)
- As the motor may run slightly, fix the motor securely with a mechanical brake or make sure that there will be no problem in safety if the motor runs (caution is required especially in elevator). Note that tuning performance is unaffected even if the motor runs slightly.
- Do not connect a surge voltage suppression filter (FFR-DT or FFR-SI) between the inverter and motor.

Setting

① Select General-purpose magnetic flux vector control. (Refer to section 5.1.7.)

② Set "11" in Pr. 96 to tune motor constant (R1) without running the motor. It takes approximately 9s until tuning is completed.

③ Set the rated motor current (initial value is rated inverter current) in Pr. 9 "Electronic thermal O/L relay" (refer to page 5-2).

④ Set the rated voltage of motor (initial value is 200V/400V) in Pr. 83 "Rated motor voltage" and rated motor frequency in Pr. 84 "Rated motor frequency".

⑤ Set Pr. 71 "Applied motor" according to the motor used.

Motor			Parameter 71 ①
Mitsubishi	Standard motor, high efficiency motor	SF-JR	3
		SF-JR 4P-1.5kW or less	23
		SF-HR	43
		Others	3
	Constant-torque motor	SF-JRCA 4P	13
		SF-HRCA	53
		Others (SF-JRC, etc.)	13
Other manufacturer's	Standard motor		3
	Constant-torque motor		13

Tab. 5-3: *Motor selection*

① For other settings of Pr. 71, refer to the section 6.7.2.

Execution of tuning

CAUTION:

Before performing tuning, check the monitor display of the operation panel or parameter unit (FR-PU04/FR-PU07) if the inverter is in the status for tuning. (Refer to Tab. 5-4.) When the start command is turned on under V/f control, the motor starts.

When performing tuning or PU operation, press the RUN key of the operation panel or the FWD or REV key of the parameter unit (FR-PU04/FR-PU07).

For external operation, turn on the run command (STF signal or STR signal). Tuning starts. (Excitation noise is produced during tuning.)

NOTES

To force tuning to end, use the MRS or RES signal or press the STOP key of the operation panel. Turning the start signal (STF signal or STR signal) off also ends tuning.

During offline auto tuning, only the following I/O signals are valid:
– Input terminal:
  STF and STR
– Output terminal :
  RUN, SO, AM, A, B, C
Note that the progress status of offline auto tuning is output from AM when speed and output frequency are selected.

Since the RUN signal turns on when tuning is started, caution is required especially when a sequence which releases a mechanical brake by the RUN signal has been designed.

When executing offline auto tuning, input the run command after switching on the main circuit power (R/L1, S/L2, T/L3) of the inverter.

Do not perform ON/OFF switching of the second function selection signal (RT) during execution of offline auto tuning. Auto tuning is not excecuted properly.

Monitor display during auto tuning

Monitor is displayed on the operation panel and parameter unit (FR-PU04/FR-PU07) during tuning as below. The value displayed corresponds to the value of parameter 96.

	Parameter Unit (FR-PU04/FR-PU07) Display	Operation Panel Indication
Parameter 96	11	11
Setting	READ:List 11 - - - STOP PU	
Tuning in progress	TUNE 12 STF FWD PU	
Normal end	TUNE 13 COMPETION STF STOP PU	Flickering
Error end (when inverter protective function operation is activated)	TUNE ERROR 9 STF STOP PU	

Tab. 5-4: *Monitor display*

NOTE

It takes approximately 9s until tuning is completed.

The set frequency monitor displayed during the offline auto tuning is 0Hz.

Return to normal operation

When offline auto tuning ends, press the STOP/RESET key of the operation panel during PU operation. For external operation, turn off the start signal (STF signal or STR signal) once.

This operation resets the offline auto tuning and the PU's monitor display returns to the normal indication. (Without this operation, next operation cannot be started.)

If offline auto tuning ended in error (see the table below), motor constants are not set. Perform an inverter reset and restart tuning.

Value of Pr. 96	Error Cause	Remedy
8	Forced end	Set "11" in Pr. 96 and perform tuning again.
9	Inverter protective function operation	Make setting again.
91	Current limit (stall prevention) function was activated.	Set "1" in Pr. 156.
92	Converter output voltage reached 75% of rated value.	Check for fluctuation of power supply voltage.
93	– Calculation error – A motor is not connected.	Check the motor wiring and make setting again.

Tab. 5-5: *Value of Parameter 96*

When tuning is ended forcibly by pressing the STOP-key or turning off the start signal (STF or STR) during tuning, offline auto tuning does not end normally. The motor constants have not been set. Perform an inverter reset and restart tuning.

When using the motor corresponding to the following specifications and conditions, reset Pr. 9 "Electronic thermal O/L relay" as below after tuning is completed.

- When the rated power specifications of the motor is 200/220V(400/440V) 60Hz, set 1.1 times rated motor current value in Pr. 9.
- When performing motor protection from overheat using a PTC thermistor or motor with temperature detector such as Klixon, set "0" (motor overheat protection by the inverter is invalid) in Pr. 9.

When you know motor excitation current (no load current), set the value in Pr. 82.

NOTES

The motor constants measured once in the offline auto tuning are stored as parameters and their data are held until the offline auto tuning is performed again.

An instantaneous power failure occurring during tuning will result in a tuning error. After power is restored, the inverter goes into the normal operation mode. Therefore, when STF (STR) signal is on, the motor runs in the forward (reverse) rotation.

Any alarm occurring during tuning is handled as in the ordinary mode. Note that if an error retry has been set, retry is ignored.

CAUTION:

As the motor may run slightly during offline auto tuning, fix the motor securely with a mechanical brake or make sure that there will be no problem in safety if the motor runs (caution is required especially in elevator). Note that tuning performance is unaffected even if the motor runs slightly.

5.2 PU operation mode

When operating the inverter via the parameter unit, the motor is started or stopped by the RUN key or the STOP/RESET key on the unit. The rated frequency value can thereby originate from various sources:

- A fixed set value
  Operation at the frequency set in the frequency setting mode of the PU. (Refer to section 5.2.1.)
- Operation using the digital dial as the volume
  The frequency is set by the digital dial, used here as a potentiometer. (Refer to section 5.2.2.)
- Selection of stored set values by external signals
  Change of frequency with ON/OFF switches connected to terminals. (Refer to section 5.2.3.)
- Setpoint setting made by external analog signals
  Frequency setting with a voltage output device (section 5.2.4) or with a current output device (section 5.2.5).

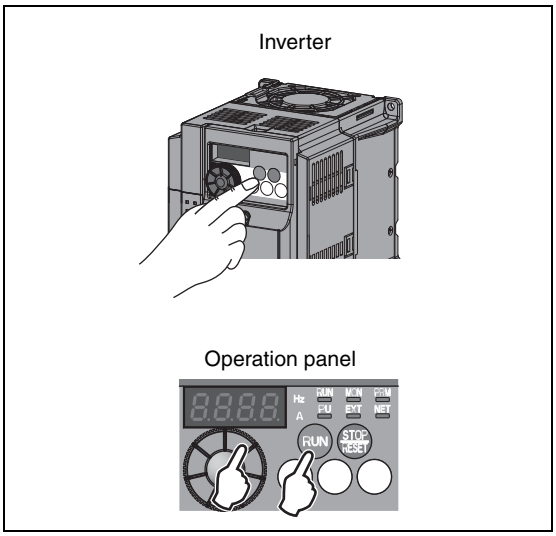

Fig. 5-10:
PU operation mode

I002086E

5.2.1 Set the set frequency to operate

Example ▽ Performing operation at 30Hz

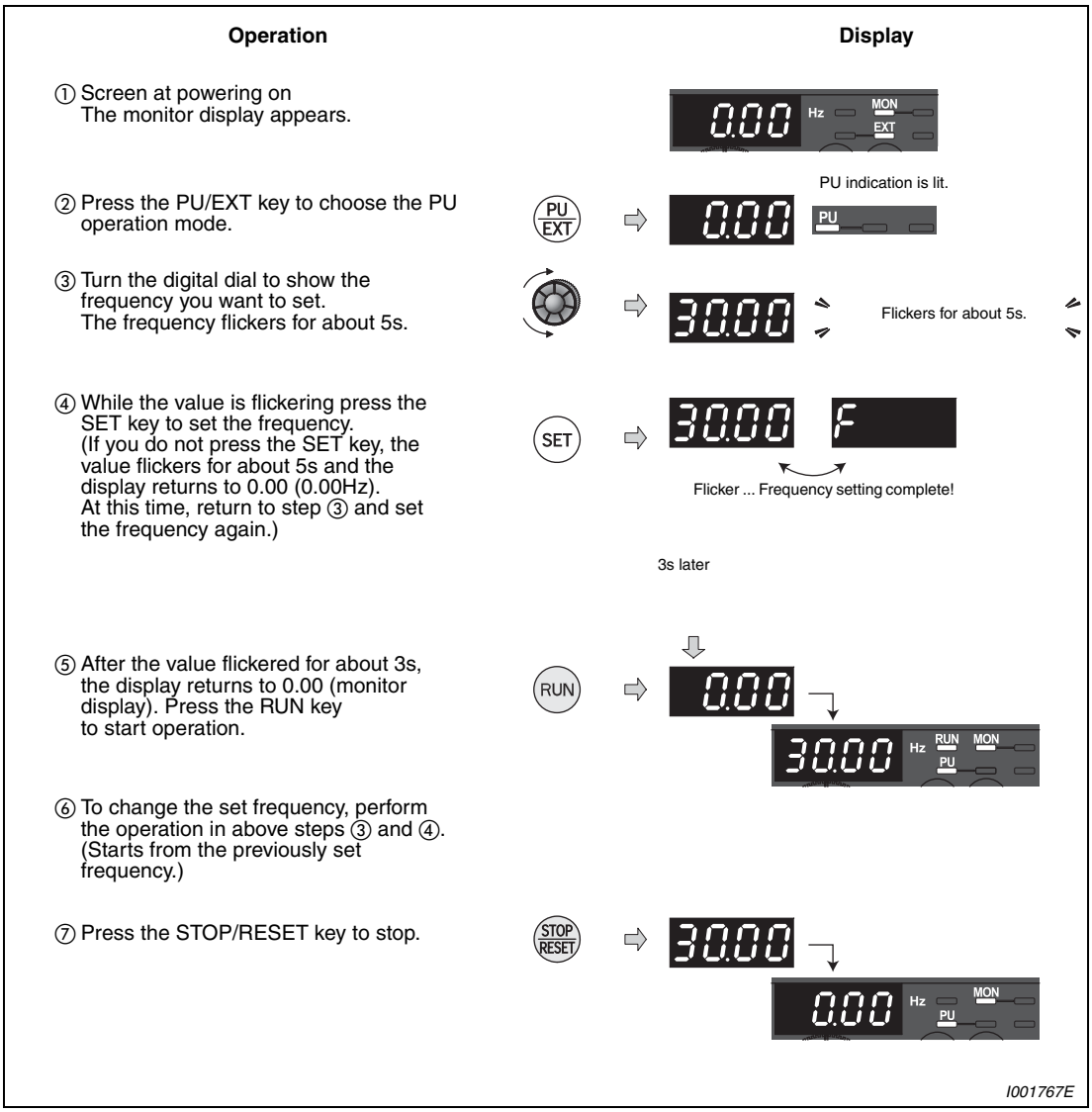

Fig. 5-11: *Frequency setting with the digital dial*

△

Possible faults:

- Operation cannot be performed at the set frequency.
  - Did you press the SET key within 5s after turning the digital dial?
- The frequency does not change by turning the digital dial.
  - Check to see if the operation mode selected is the external operation mode. (Press the PU/EXT key to change to the PU operation mode.)
- Operation does not change to the PU operation mode.
  - Check that "0" (initial value) is set in Pr. 79 "Operation mode selection".
  - Check that the start command is not on.

Change the acceleration time using Pr. 7 (refer to section 5.1.5) and the deceleration time using Pr. 8 (refer to section 5.1.5).

The maximum output frequency is set in Pr. 1. (Refer to section 5.1.4.)

NOTES

Press the digital dial to show the set frequency.

The digital dial can also be used like a potentiometer to perform operation. (Refer to section 5.2.2).

Use Pr. 295 "Magnitude of frequency change setting" to change the frequency setting increments of the digital dial.

5.2.2 Use the digital dial like a potentiometer to perform operation

- Set "1" in Pr. 161 "Frequency setting/key lock operation selection".

Example ▽ Change the frequency from 0Hz to 50Hz during operation.

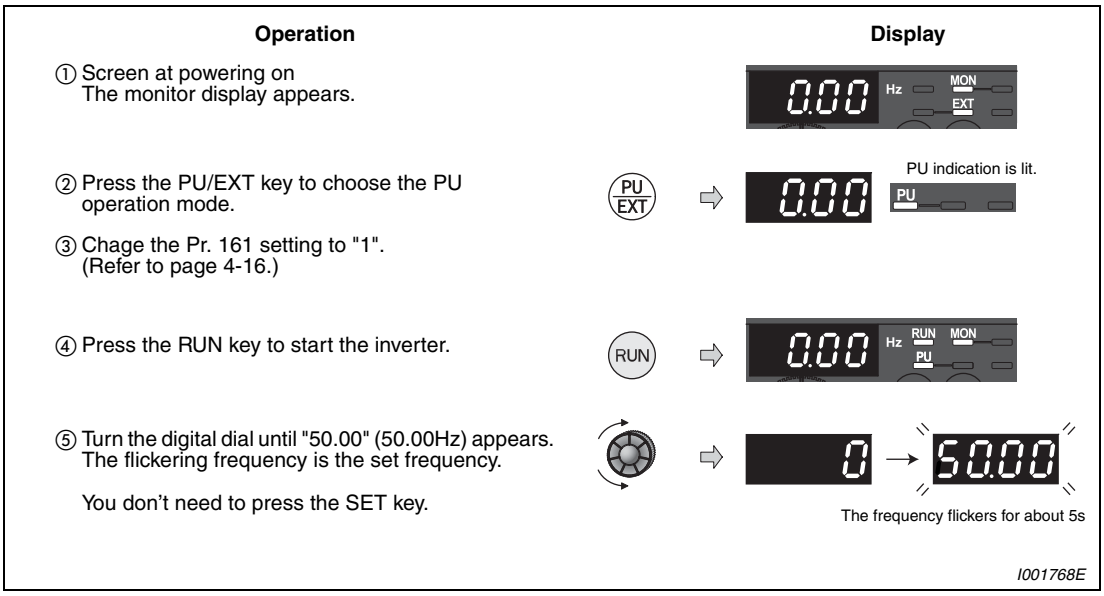

Fig. 5-12: *Use the digital dial like a potentiometer to perform operation*

NOTES

If flickering "50.00" turns to "0.0", the Pr. 161 "Frequency setting/key lock operation selection" setting may not be "1".

Independently of whether the inverter is running or at a stop, the frequency can be set by merely turning the digital dial.

When the frequency is changed, it will be stored in E²PROM as the set frequency after 10s.

△

5.2.3 Use switches to give the frequency command (multi-speed setting)

In frequency inverters of the FR-D700 SC series up to 15 frequency setpoints (and thus rpms and speeds) can be selected via the RH, RM, RL and REX terminals. Manually activated switches or relay outputs of a programmble logic controller (PLC), for example, can be used to select a frequency.

- Pr. 79 "Operation mode selection" must be set to "4" (external/PU combined operation mode 2).
- Use the RUN key to give a start command.
- The initial values of the terminals RH, RM, RL are 50Hz, 30Hz, and 10Hz. (Refer to section 5.3.2 to change frequencies using Pr. 4, Pr. 5 and Pr. 6.)
- Three setpoints can be selected by separately switching on the signals to the RH, RM and RL terminals. The selection of the fourth to the seventh fixed frequency is possible through the combination of signals of these inputs (see diagram below). The setpoints are determined by parameters 24 to 27. The REX terminal is used to select the 8th to the 15th rpm/speed (section 6.5.1).

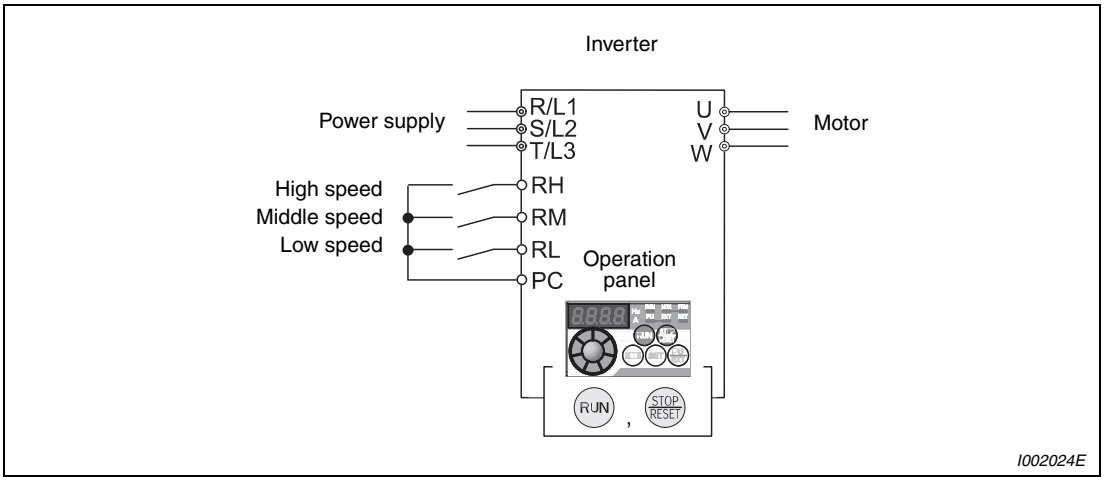

Fig. 5-13: *Use switches to give the frequency command*

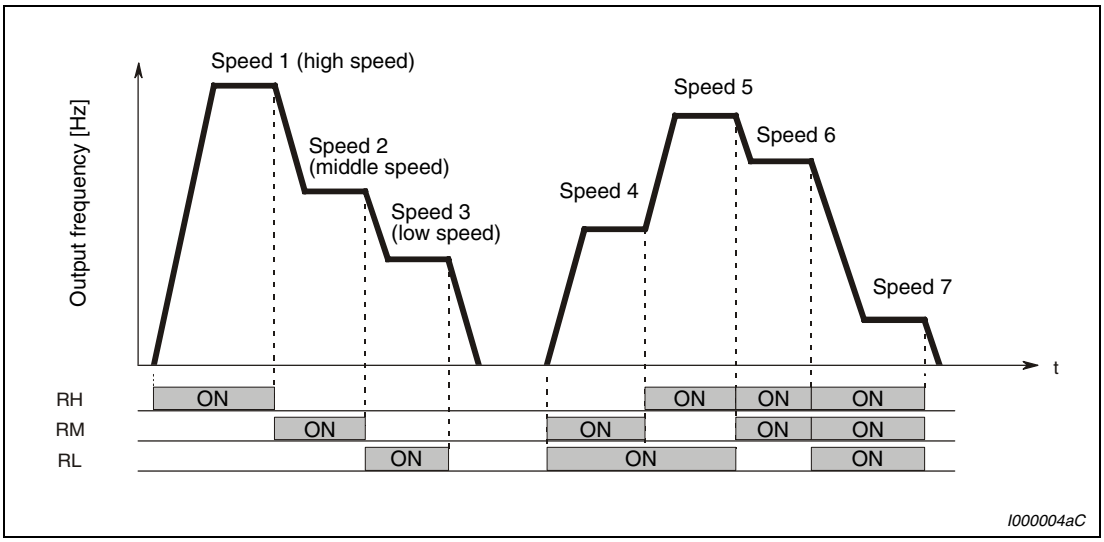

Fig. 5-14: *Multi-speed selection by external terminals*

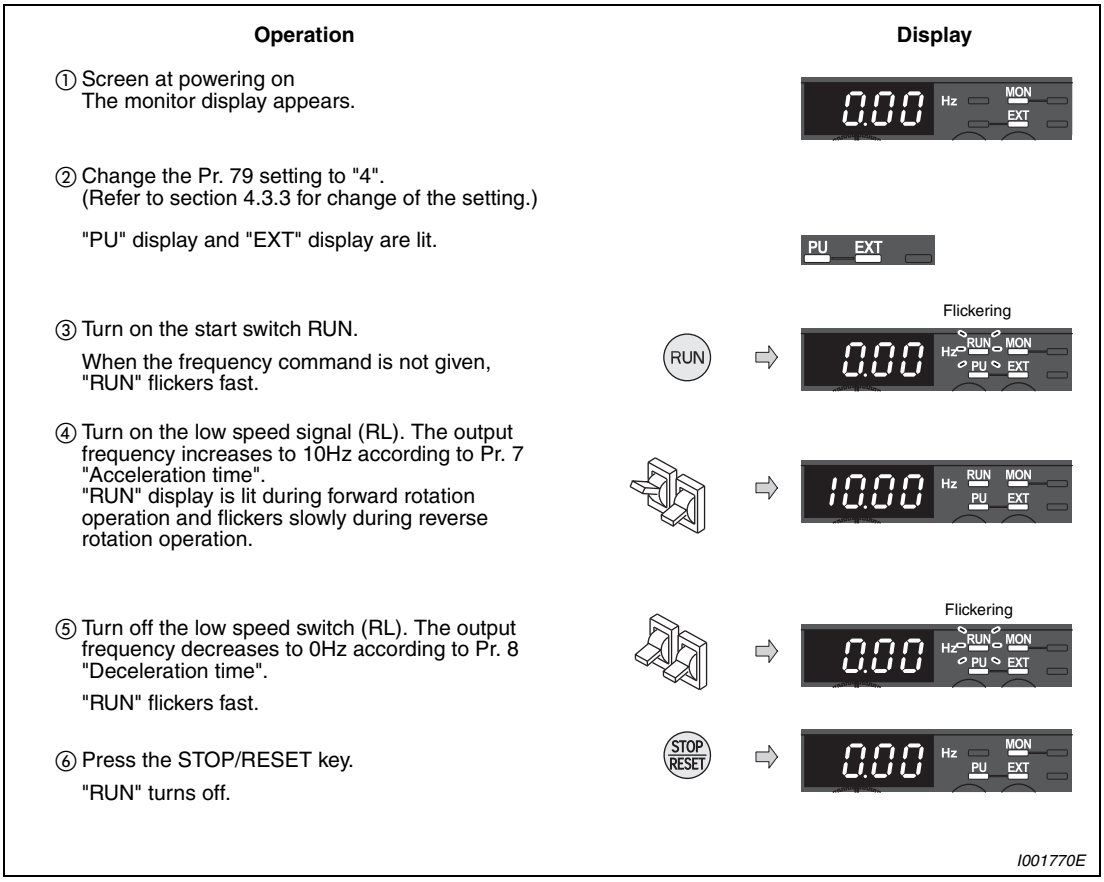

Fig. 5-15: *Operate the inverter by using multi-speed setting*

Possible faults:

- 50Hz for the RH, 30Hz for the RL and 10Hz for the RL are not output when they are turned on.
  - Check for the setting of Pr. 4, Pr. 5, and Pr. 6 once again.
  - Check for the setting of Pr. 1 "Maximum frequency" and Pr. 2 "Minimum frequency" once again. (Refer to section 5.1.4.)
  - Check that Pr. 180 "RL terminal function selection" = "0", Pr. 181 "RM terminal function selection" = "1", Pr. 182 "RH terminal function selection" = "2" and Pr. 59 "Remote function selection" = "0" (all are initial values).
- RUN lamp is not lit.
  - Check that wiring is correct.
  - Check for the Pr. 79 setting once again. (Pr. 79 must be set to "4".) (Refer to section 5.1.6.)

NOTE

Refer to section 5.3.2 to change the running frequency at each terminal in Pr. 4 "Multi-speed setting (highspeed)", Pr. 5 "Multi-speed setting (middle speed)", and Pr. 6 "Multi-speed setting (low speed)".

5.2.4 Perform frequency setting by analog voltage input

In this type of setpoint selection a potentiometer is connected to the frequency inverter. The potentiometer is supplied with a voltage of 5V through terminal 10 of the frequency inverter.

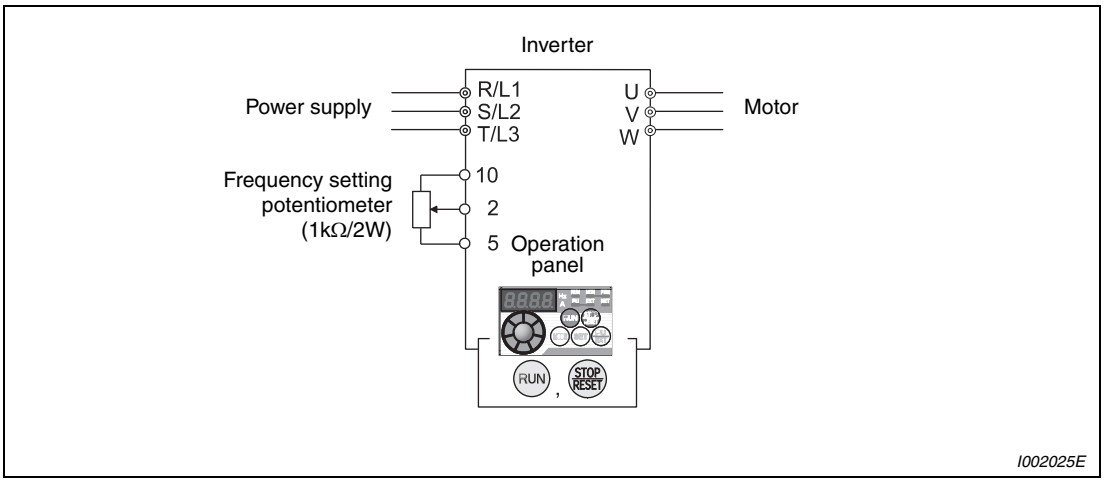

Fig. 5-16: *Frequency setting by analog voltage input*

- Pr. 79 "Operation mode selection" must be set to "4" (external/PU combined operation mode 2).
- Use the RUN key to give a start command.

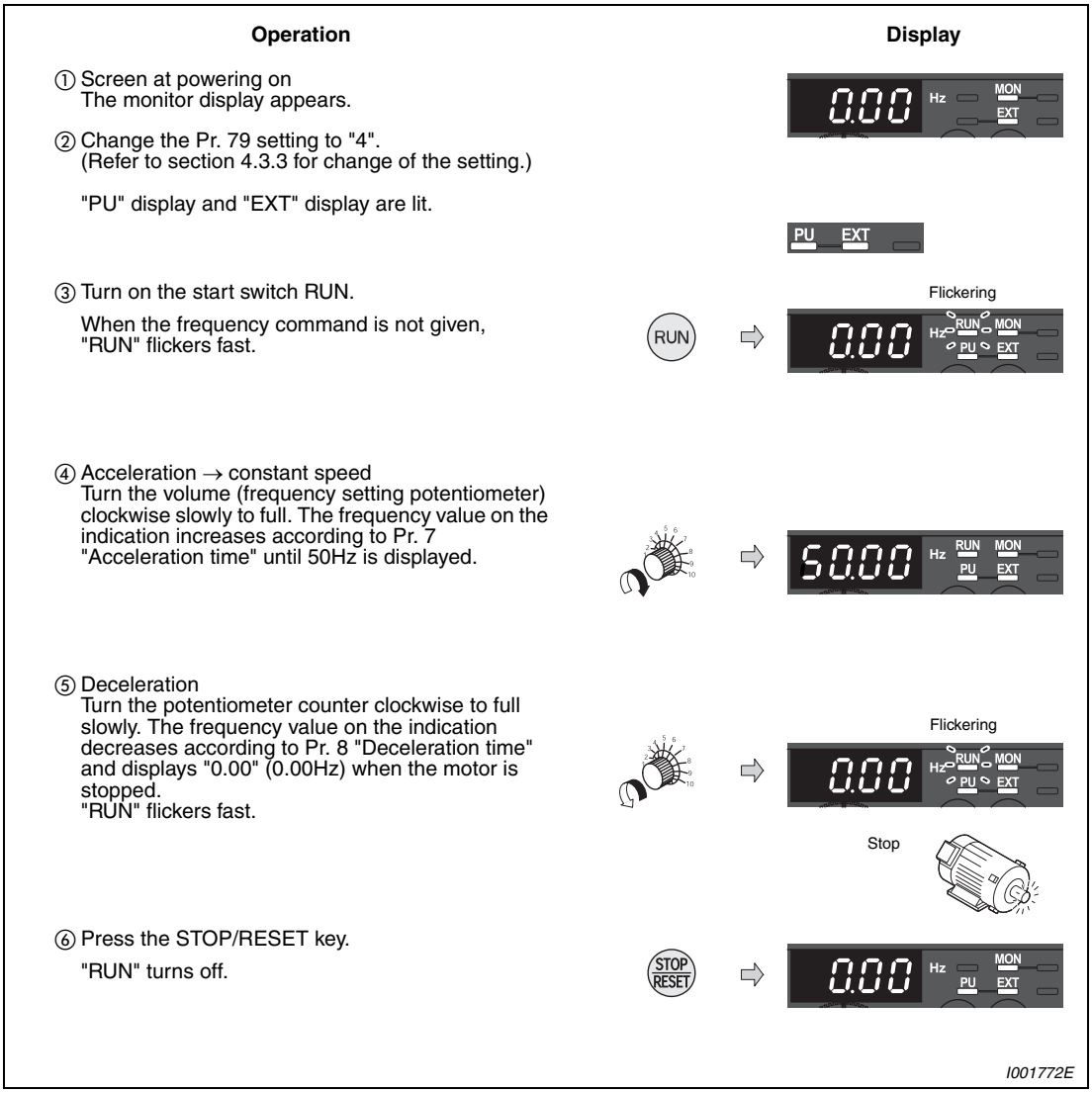

Fig. 5-17: *Operate the inverter by using the analog voltage input*

NOTES

Change the frequency (50Hz) of the maximum value of potentiometer (at 5V) by adjusting the frequency in Pr. 125 "Terminal 2 frequency setting gain frequency". (Refer to section 5.3.4.).

Change the frequency (0Hz) of the minimum value of potentiometer (at 0V) by adjusting the frequency in calibration parameter C2 "Terminal 2 frequency setting bias frequency". (Refer to section 6.15.3.)

5.2.5 Perform frequency setting by analog current input

An external current source is connection to the frequency inverter for setpoint default setting.

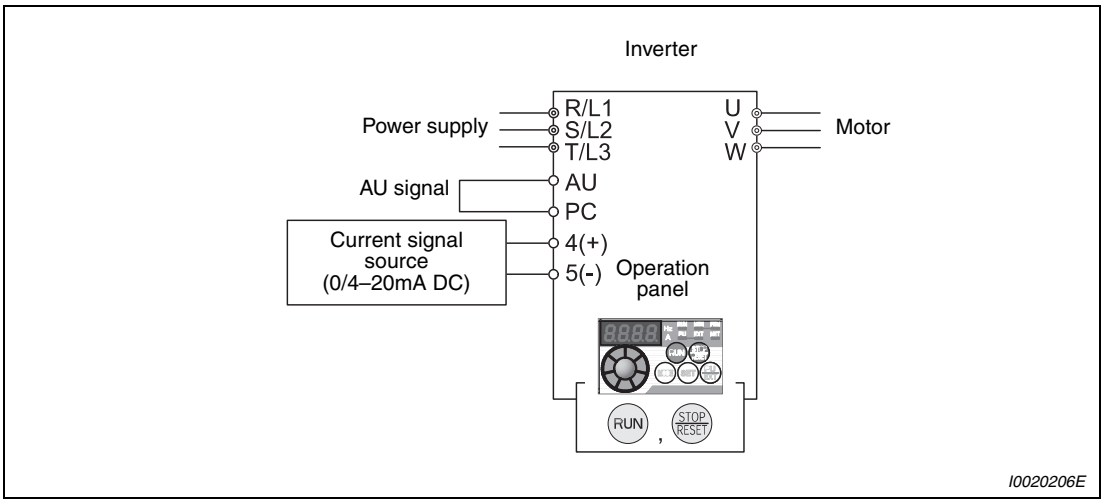

Fig. 5-18: *Frequency setting by analog current input*

- Pr. 79 "Operation mode selection" must be set to "4" (external/PU combined operation mode 2).
- Turn the AU signal on.
- Use the RUN key to give a start command.

NOTE

For the analog current input (0/4 to 20 mA) to become effective for setpoint default setting, the AU signal on the AU terminal must be activated. This is done, for example, by means of a bridge as shown in Fig. 5-18.

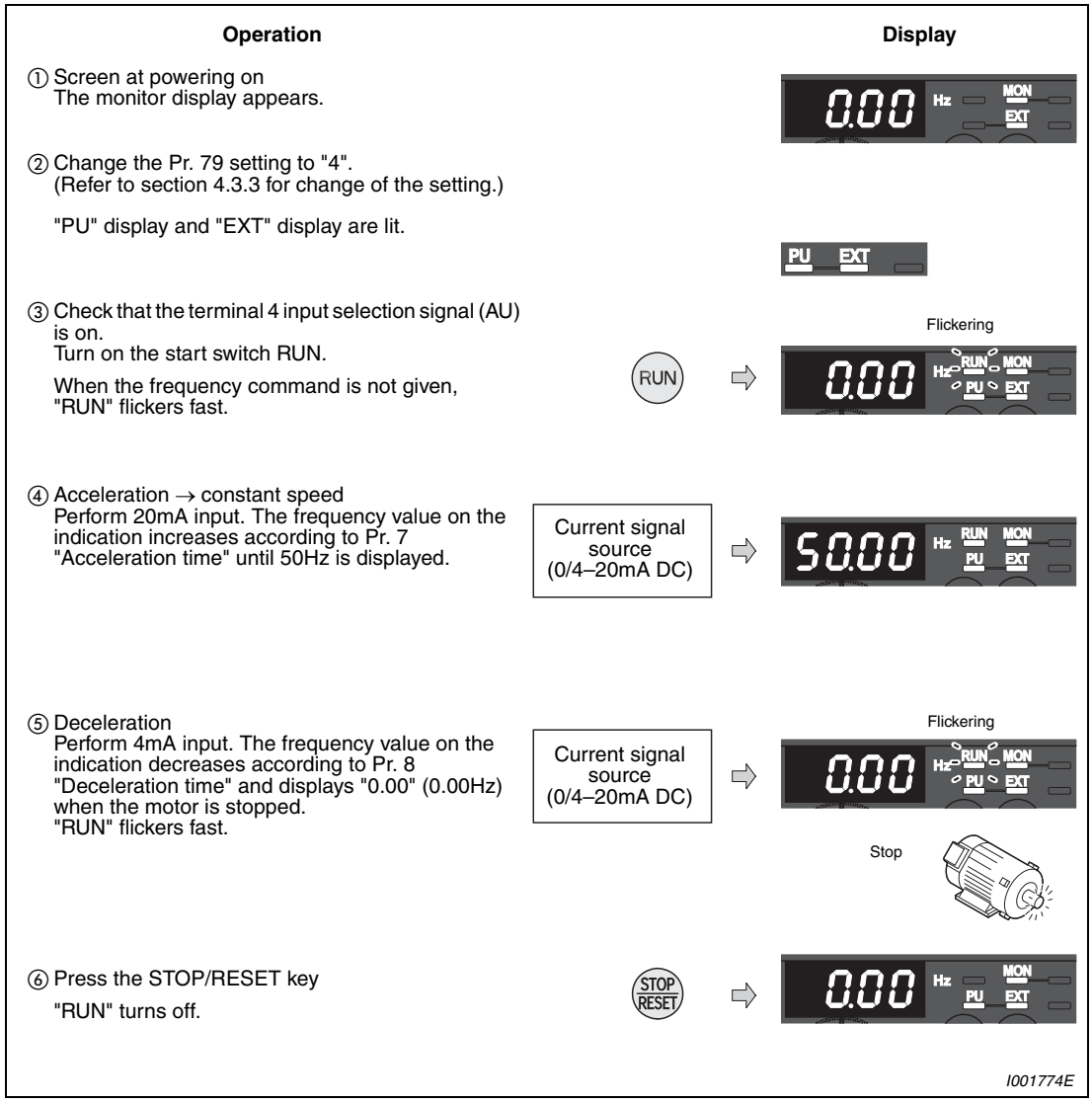

Fig. 5-19: *Operate the inverter by using the analog current input*

NOTES

One of Pr. 178 to Pr. 182 "AU terminal function selection" must be set to "4" (AU signal) (initial value). (Refer to section 6.9.1.)

Change the frequency (50Hz) at the maximum value of potentiometer (at 20mA) by adjusting the frequency in Pr. 126 "Terminal 4 frequency setting gain frequency". (Refer to section 5.3.6).

Change the frequency (0Hz) at the minimum value of potentiometer (at 4mA) by adjusting the frequency in calibration parameter C5 "Terminal 4 frequency setting bias frequency". (Refer to section 6.15.3.)

5.3 External operation

When operating the inverter via external signals, the motor is started and stopped by external signals connected to terminals STF and STR of the inverter. Just as when operating using the parameter unit, the set frequency value may originate from various sources:

- A fixed set value
  Operation at the frequency set in the frequency setting mode of the PU. (Refer to section 5.3.1.)
- Selection of stored set values by external signals
  Give a frequency command by switch (multi-speed setting). (Refer to section 5.3.2).
- Setpoint setting made by external analog signals
  Perform frequency setting by a voltage output device (section 5.3.3.) or by a current output device (section 5.3.4).

5.3.1 Use the set frequency set by PU (Pr. 79 = 3)

- Set "3" in Pr. 79 (External/PU combined operation mode 1).
- Switch terminal STF (STR)-PC on to give a start command.
- Refer to section 5.2.1 for the set frequency by PU.

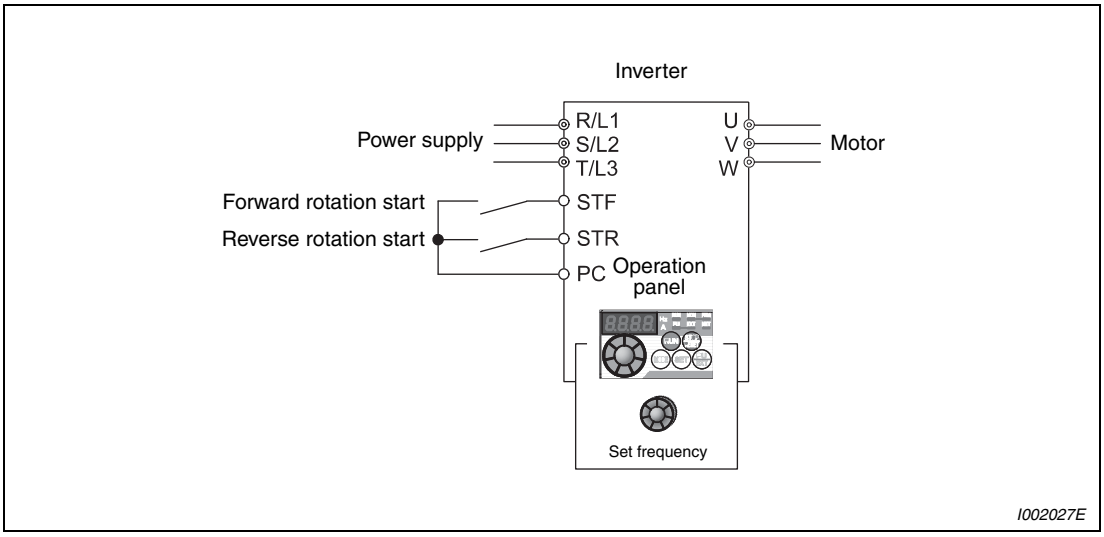

Fig. 5-20: *External operation*

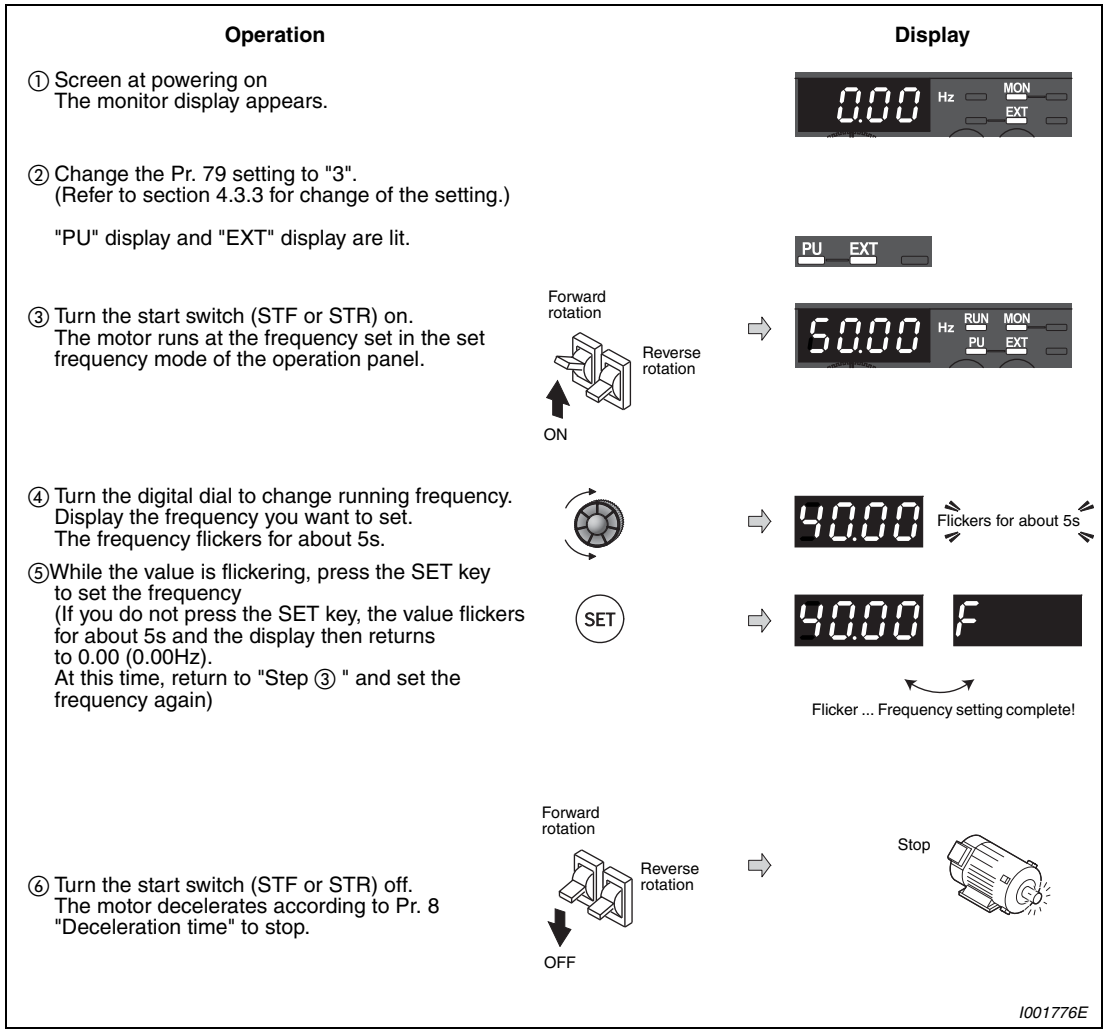

Fig. 5-21: *Operate the inverter by using external signals*

NOTES

Pr. 178 "STF terminal function selection" must be set to "60" (or Pr. 179 "STR terminal function selection" must be set to "61"). (All are initial values.)

When Pr. 79 "Operation mode selection" is set to "3", multi-speed operation is also made valid. (Refer to section 5.3.2.)

Possible faults:

- Pressing the STOP/RESET key of the operation panel changed the display

.
  - Turn the start switch (STF or STR) off.
  - The display can be reset by PU/EXT.

5.3.2 Use switches to give a start command and a frequency command (multi-speed setting) (Pr. 4 to Pr. 6)

Up to 15 set frequency values can be selected via terminals RH, RM, RL and REX of the frequency inverter. Manually operated switches or relay outputs of a programmable logic controller (PLC), for instance, can be used.

- Start command by terminal STF (STR)-PC.
- Frequency command by terminal RH, RM, RL and STR-PC.
- "EXT" must be lit. When "PU" is lit, switch it to "EXT" with the PU/EXT key.
- The initial values of the terminals RH, RM, RL are 50Hz, 30Hz, and 10Hz. Use Pr. 4, Pr. 5 and Pr. 6 to change.
- Three set values can be selected by separately switching on the signals at terminals RH, RM and RL. The fourth to seventh fixed frequencies are selected by combining the signals from these inputs (see figure below). The set values are determined by parameters 24 to 27. The REX terminal is used to select the 8th to 15th speed (refer to section 6.5.1).

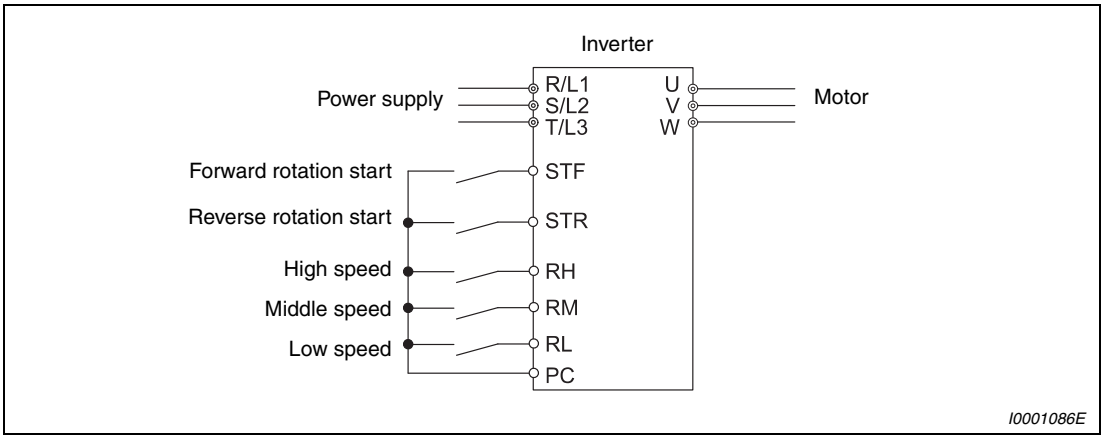

Fig. 5-22: *Frequency and start command by switches*

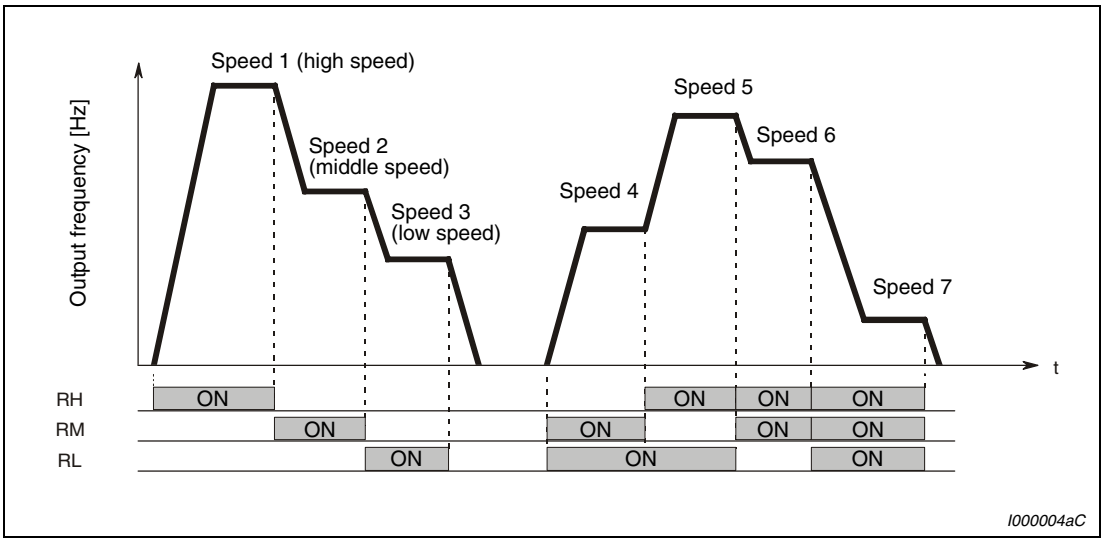

Fig. 5-23: *Multi-speed selection by external terminals*

Example ▽ Set "40Hz" in Pr. 4 "Multi-speed setting (high speed)" and turn on terminals RH and STF (STR)-PC to operate.

Operation	Display
① Power on → operation mode check For the initial setting, the inverter operates in the external operation mode "EXT" when powering on. Check that the operation command indication is "EXT". If not displayed, press the PU/EXT key to change to the external "EXT" operation mode. If the operation mode still does not change, set Pr. 79 to change to the external operation mode. (Refer to section 5.1.6).	
② Change the Pr. 4 setting to "40.00" (40.00Hz). (Refer to section 4.3.8 for change of the setting.)	
③ Turn on the high speed switch (RH).	
④ Turn the start switch (STF or STR) on. 40Hz appears (30Hz appears when RM is on and 10Hz appears when RL is on.) "RUN" display is lit during forward rotation operation and flickers during reverse rotation operation.	
⑤ Stop Turn the start switch (STF or STR) off. The motor stops according to Pr. 8 "Deceleration time".	

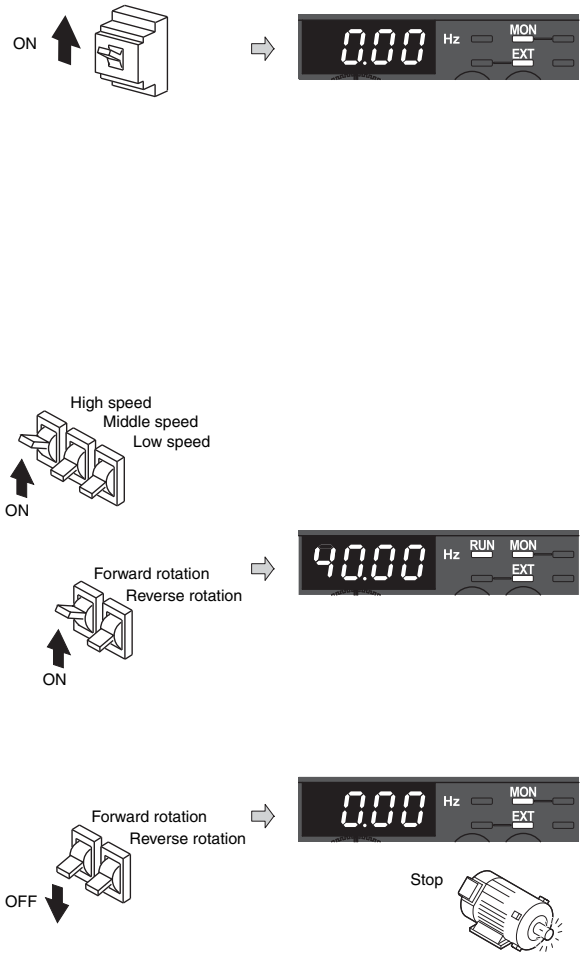

Fig. 5-24: *Operate the inverter by using external signals*

△

Possible faults:

- The EXT lamp is not lit even when the PU/EXT key is pressed.
  - Switchover of the operation mode with is valid when Pr. 79 = 0 (initial value).
- 50Hz, 30Hz and 10Hz are not output from RH, RM and RL respectively when they are turned on.
  - Check for the setting of Pr. 4, Pr. 5, and Pr. 6 once again.
  - Check for the setting of Pr. 1 "Maximum frequency" and Pr. 2 "Minimum frequency" once again. (Refer to section 5.1.4.)
  - Check for the Pr. 79 setting once again. (Pr. 79 must be set to "0" or "2".) (Refer to section 5.1.6.)
  - Check that Pr. 180 "RL terminal function selection" = "0", Pr. 181 "RM terminal function selection" = "1", Pr. 182 "RH terminal function selection" = "2" and Pr. 59 "Remote function selection" = "0". (All are initial values.)
- The RUN lamp is not lit.
  - Check that wiring is correct.
  - Check that "60" is set in Pr. 178 "STF terminal function selection" or "61" is set in Pr. 179 "STR terminal function selection". (All are initial values.)

NOTE

External operation is fixed by setting "2" (external operation mode) in Pr. 79 "Operation mode selection" when you do not want to take time pressing the PU/EXT key or when you want to use the current start command and frequency command.

5.3.3 Perform frequency setting by analog voltage input

In this type of setpoint selection a potentiometer is connected to the frequency inverter. The potentiometer is supplied with a voltage of 5V through terminal 10 of the frequency inverter.

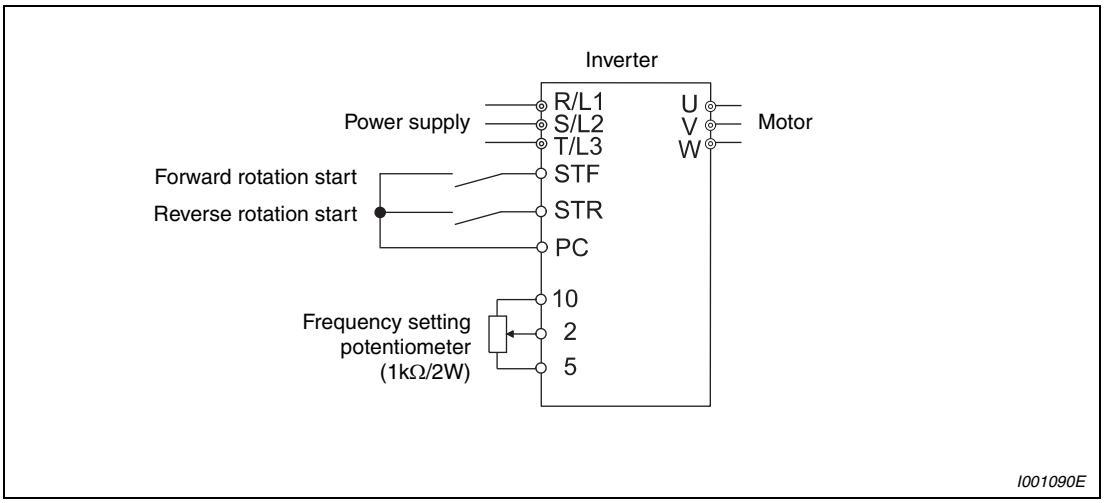

Fig. 5-25: *Frequency setting by analog voltage input*

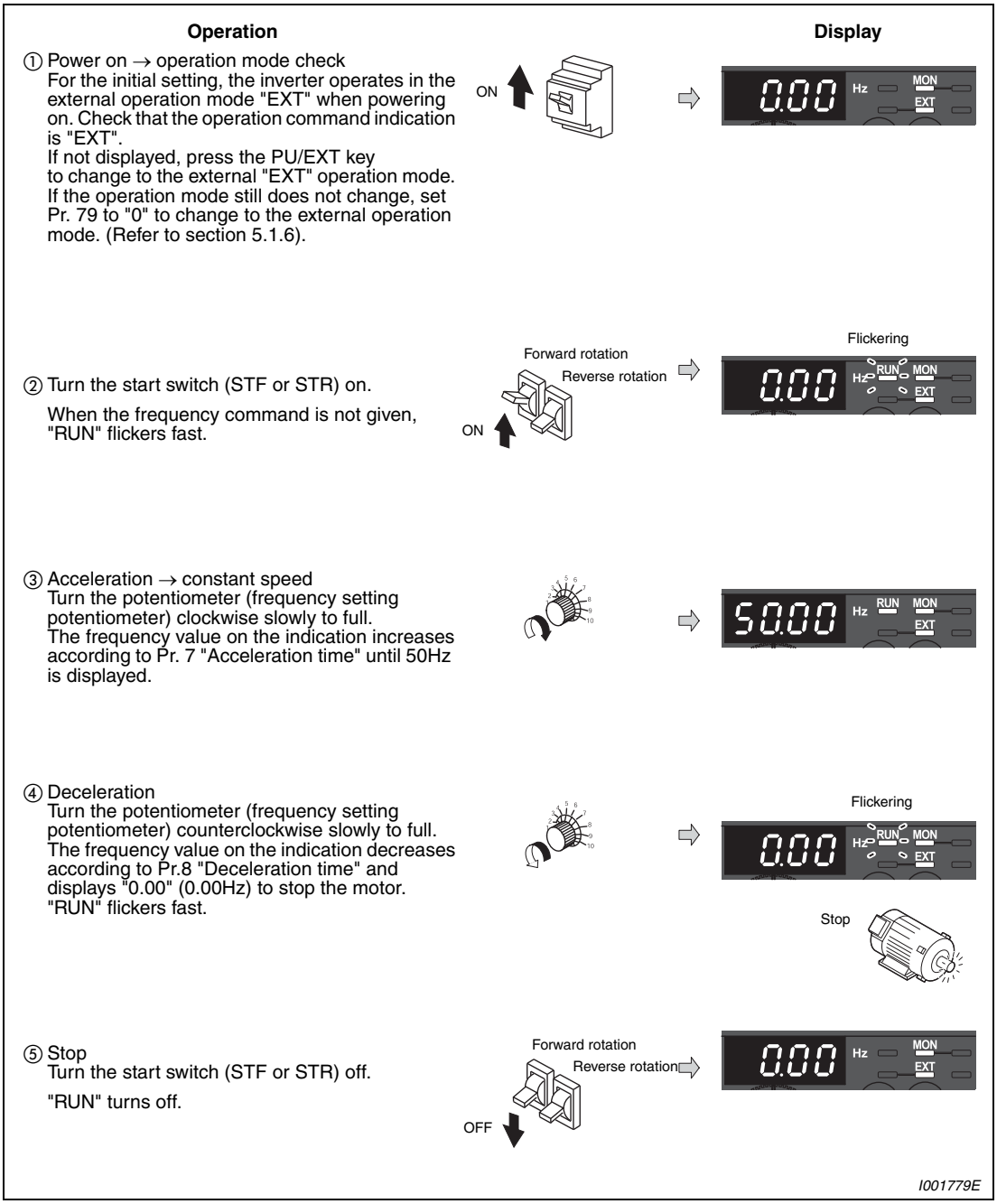

Fig. 5-26: *Operate the inverter by using the analog voltage input*

NOTES

When you want to operate in the external operation mode always at powering on or when you want to save the trouble of input, set "2" (external operation mode) in Pr. 79 "Operation mode selection" to choose external operation mode always.

Pr. 178 "STF terminal function selection" must be set to "60" (or Pr. 179 "STR terminal function selection" must be set to "61"). (All are initial values.)

Change the frequency (0Hz) of the minimum value of potentiometer (at 0V) by adjusting the frequency in calibration parameter C2 "Terminal 2 frequency setting bias frequency". (Refer to section 6.15.3.)

Possible faults:

- The motor will not rotate.
  - Check that the EXT lamp is lit. The external operation mode is valid when Pr. 79 = 0 (initial value). Use the PU/EXT key to change into the external operation mode.
  - Check that wiring is correct.

5.3.4 Change the frequency (40Hz) of the maximum value of potentiometer (at 5V)

Example ▽

The frequency of the maximum analog voltage of the potentiometer (at 5V) has to be changed from the initial setting of 50Hz to 40Hz. Set 40Hz in Pr. 125.

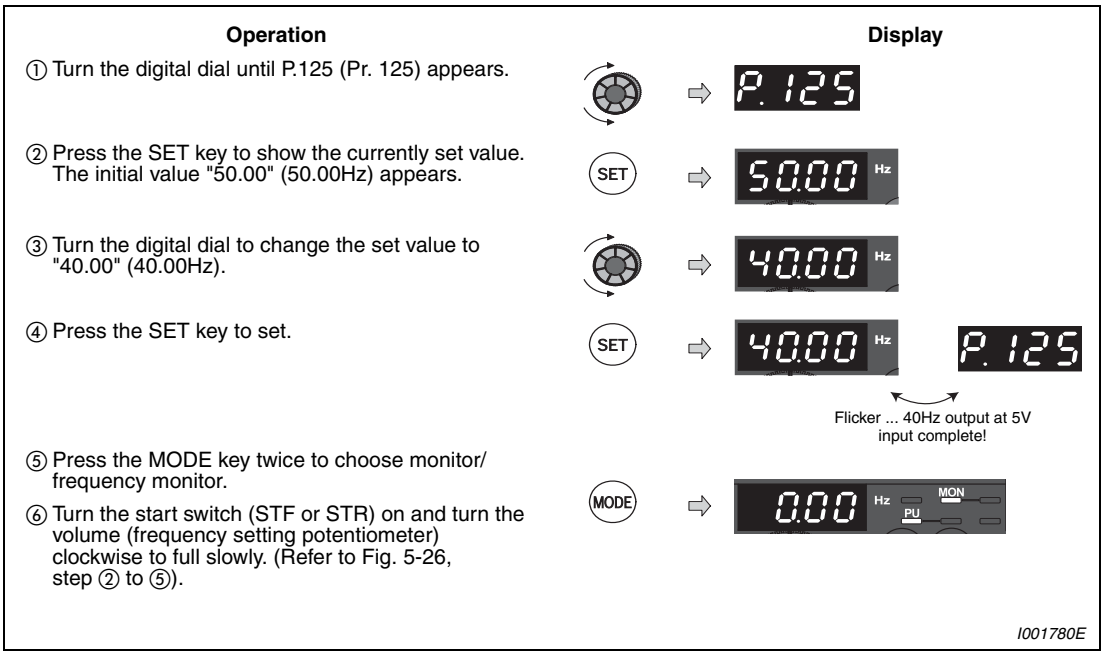

Fig. 5-27: *Change the frequency of the maximum analog value*

△

NOTES

Set the frequency at 0V using calibration parameter C2.

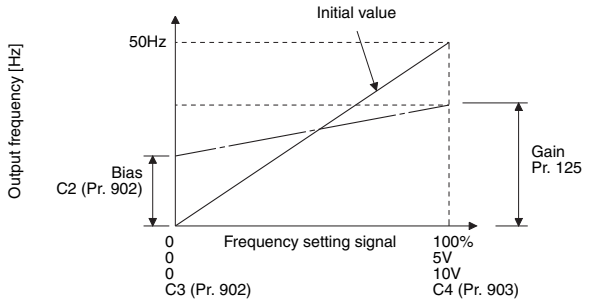

As other adjustment methods of frequency setting voltage gain, there are methods to adjust with a voltage applied to across terminals 2-5 and adjust at any point without a voltage applied. (Refer to section 6.15.3 for the setting method of calibration parameter C4.)

5.3.5 Perform frequency setting by analog current input

An external current source is connected to the frequency inverter for setpoint default setting.

- Switch terminal STF (STR)-PC on to give a start command.
- Turn the AU signal on.
- Pr. 79 "Operation mode selection" must be set to "2" (external operation mode).

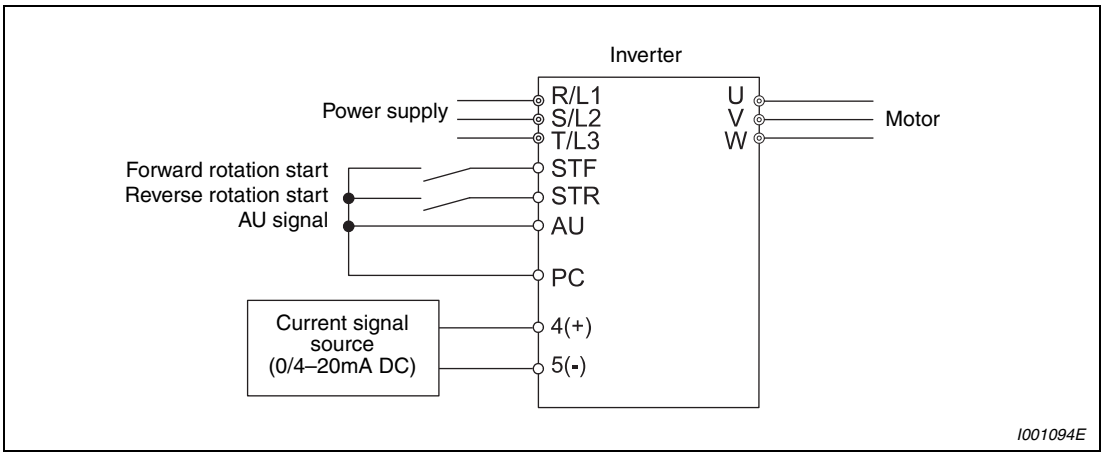

Fig. 5-28: *Frequency setting by analog current input*

NOTE

For the analog current input (0/4 to 20 mA) to become effective for setpoint default setting, the AU signal on the AU terminal must be activated. This is done, for example, by means of a bridge as shown in Fig. 5-28.

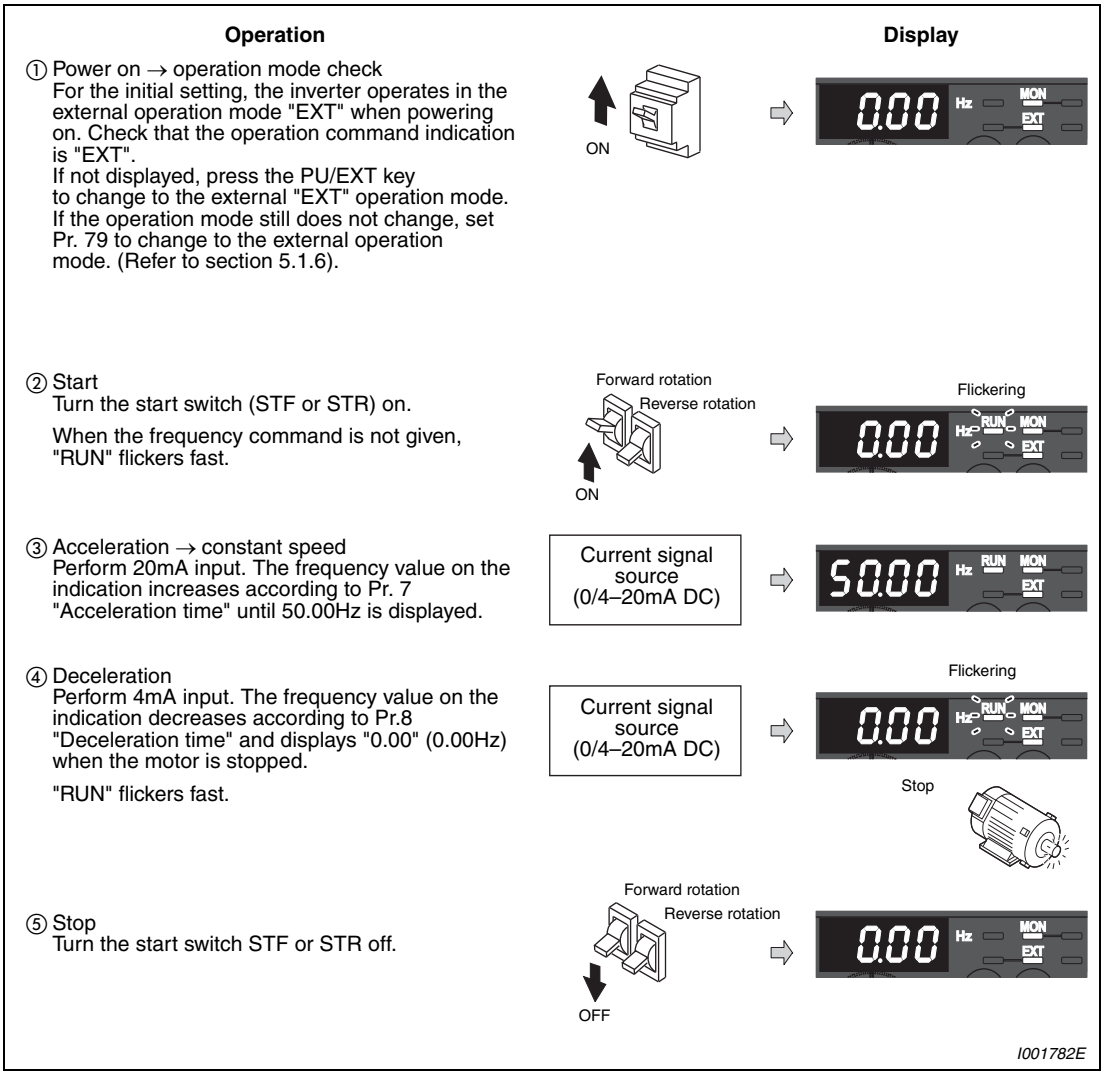

Fig. 5-29: *Operate the inverter by using the analog current input*

NOTE

One of Pr. 178 to Pr. 182 "Input terminal function selection" must be set to "4" (AU signal). (Refer to section 6.9.1.)

Possible faults:

- The motor will not rotate.
  - Check that the EXT lamp is lit. The external operation mode is valid when Pr. 79 = 0 (initial value) or 2. Use the PU/EXT key to change into the external operation mode.
  - The AU signal must be turned on.
  - Check that wiring is correct.

NOTE

Change the frequency (0Hz) of the minimum value of potentiometer (at 4mA) by adjusting the frequency in calibration parameter C5 "Terminal 4 frequency setting bias frequency". (Refer to section 6.15.3.)

5.3.6 Change the frequency (40Hz) of the maximum value of potentiometer (at 20mA)

Example ▽

The frequency of the maximum analog current of the potentiometer (at 20mA) has to be changed from the initial setting of 50Hz to 40Hz. Set 40Hz in Pr. 126.

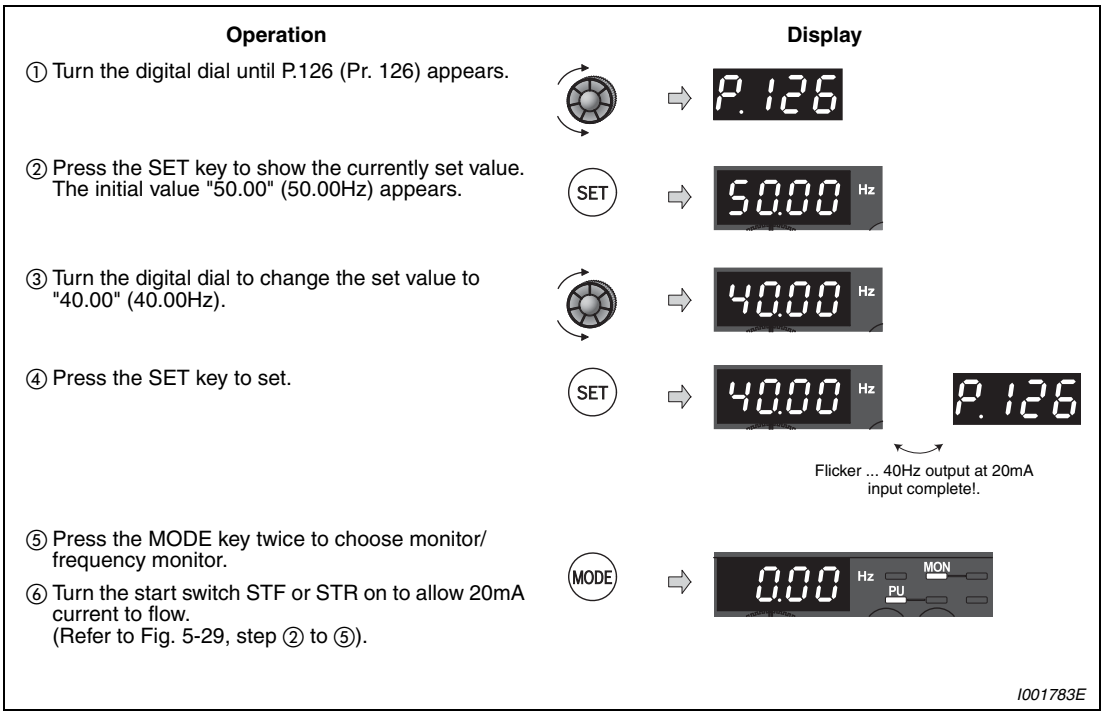

Fig. 5-30: *Change the frequency of the maximum analog value*

△

NOTES

Set the frequency at 4mA using calibration parameter C5.

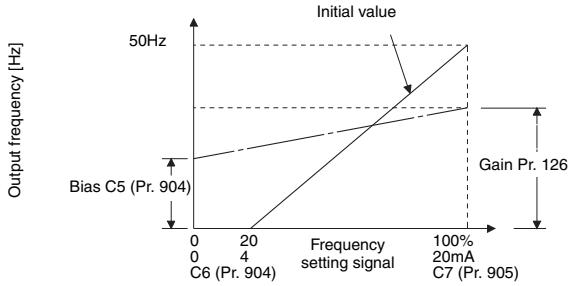

As other adjustment methods of frequency setting current gain, there are methods to adjust with a current flowing in the terminals 4-5 and adjust at any point without a current flowing. (Refer to section 6.15.3 for the setting method of calibration parameter C7.)

When performing a high speed operation at 120Hz or more, setting of Pr. 18 "High speed maximum frequency" is necessary. (Refer to section 6.3.1.)

6 Parameter

6.1 Parameter overview

For simple variable-speed operation of the inverter, the initial setting of the parameters may be used as they are. Set the necessary parameters to meet the load and operational specifications. Parameter setting, change and check can be made from the operation panel.
◎ indicates simple mode parameters.
The abbreviations in the explanations below are as follows:

V/F ..... V/f control

GP MFVC ..... General-purpose magnetic flux vector control

Parameters without any indication are valid for all control. The half-tone screened parameters allow its setting to be changed during operation even if "0" (initial value) is set in Pr. 77 "Parameter write selection".

Function	Parameter	Related parameters	Name	Increments	Initial value	Setting range	Description	Parameter copy	Parameter clear	All Parameter clear	Refer to page
								✔: enabled —: disabled			
V/F Manual torque boost	0	◎	Torque boost	0.1%	6/4/3% *	0–30%	Set the output voltage at 0Hz as % * *Initial values differ according to the inverter capacity: FR-D720S-042SC or less, FR-D740-022SC or less/ FR-D720S-070SC and 100SC, FR-D740-036SC to 080SC/ FR-D740-120SC and 160SC*	✔	✔	✔	6-26
		46	Second torque boost	0.1%	9999	0–30%	Set the torque boost when the RT signal is on.	✔	✔	✔	
						9999	Without second torque boost				
Minimum/maximum frequency	1	◎	Maximum frequency	0.01Hz	120Hz	0–120Hz	Set the upper limit of the output frequency	✔	✔	✔	6-40
	2	◎	Minimum frequency	0.01Hz	0Hz	0–120Hz	Set the lower limit of the output frequency	✔	✔	✔	
		18	High speed maximum frequency	0.01Hz	120Hz	120–400Hz	Set when performing operation at 120Hz or more	✔	✔	✔	

Tab. 6-1: *Parameter overview (1)*

Function	Parameter	Related parameters	Name	Increments	Initial value	Setting range	Description	Parameter copy	Parameter clear	All Parameter clear	Refer to page
								✔: enabled —: disabled			
Base frequency, voltage (V/F)	3	◎	Base frequency	0.01Hz	50Hz	0–400Hz	Set the frequency when the motor rated torque is generated. (50Hz/ 60Hz)	✔	✔	✔	6-44
		19	Base frequency voltage	0.1V	8888	0–1000V	Maximum inverter output voltage	✔	✔	✔	
						8888	95% of power supply voltage				
						9999	Same as power supply voltage				
		47	Second V/f (base frequency)	0.01Hz	9999	0–400Hz	Set the base frequency when the RT signal is on.	✔	✔	✔	
						9999	Second V/f is invalid.				
Multi-speed setting operation	4	◎	Multi-speed setting (high speed)	0.01Hz	50Hz	0–400Hz	Set frequency when the RH signal is on.	✔	✔	✔	6-48
	5	◎	Multi-speed setting (middle speed)	0.01Hz	30Hz	0–400Hz	Set frequency when the RM signal is on.	✔	✔	✔	
	6	◎	Multi-speed setting (low speed)	0.01Hz	10Hz	0–400Hz	Set frequency when the RL signal is on.	✔	✔	✔	
		24 – 27	Multi-speed setting 4 speed to 7 speed	0.01Hz	9999	0–400Hz/ 9999	Frequency from 4 speed to 15 speed can be set according to the combination of the RH, RM, RL and REX signals. 9999: not selected	✔	✔	✔	
		232 – 239	Multi-speed setting 8 speed to 15 speed	0.01Hz	9999	0–400Hz/ 9999		✔	✔	✔	
Acceleration/deceleration time setting	7	◎	Acceleration time	0.1s	5/10s *	0–3600s	Set the motor acceleration time * *Initial values differ according to the inverter capacity: FR-D720S-008SC to 100SC FR-D740-080SC or less/ FR-D740-120SC and 160SC*	✔	✔	✔	6-59
	8	◎	Deceleration time	0.1s	5/10s *	0–3600s	Set the motor deceleration time * *Initial values differ according to the inverter capacity: FR-D720S-008SC to 100SC FR-D740-080SC or less/ FR-D740-120SC and 160SC*	✔	✔	✔	
		20	Acceleration/ deceleration reference frequency	0.01Hz	50Hz	1–400Hz	Set the frequency referenced as acceleration/deceleration time. As acceleration/deceleration time, set the frequency change time from stop to Pr. 20.	✔	✔	✔	
		44	Second acceleration/ deceleration time	0.1s	5/10s *	0–3600s	Set the acceleration/deceleration time when the RT signal is on. * *Initial values differ according to the inverter capacity: FR-D720S-008SC to 100SC FR-D740-080SC or less/ FR-D740-120SC and 160SC*	✔	✔	✔	
		45	Second deceleration time	0.1s	9999	0–3600s	Set the deceleration time when the RT signal is on.	✔	✔	✔	
						9999	Acceleration time = deceleration time				

Tab. 6-1: *Parameter overview (2)*

Function	Parameter	Related parameters	Name	Increments	Initial value	Setting range	Description	Parameter copy	Parameter clear	All Parameter clear	Refer to page
								✔: enabled —: disabled			
Motor protection from overheat (electronic thermal relay function)	9	◎	Electronic thermal O/L relay	0.01A	Rated inverter output current	0–500A	Set the rated motor current.	✔	✔	✔	6-66
		51	Second electronic thermal O/L relay	0.01A	9999	0–500A	Made valid when the RT signal is on. Set the rated motor current.	✔	✔	✔	
						9999	Second electronic thermal O/L relay invalid				
		561	PTC thermistor protection level	0.01kΩ	9999	0.5–30kΩ	Set the level (resistance value) for PTC thermistor protection activates.	✔	—	✔	
						9999	PTC thermistor protection is inactive.				
DC injection brake	10		DC injection brake operation frequency	0.01Hz	3Hz	0–120Hz	Set the operation frequency of the DC injection brake.	✔	✔	✔	6-81
	11		DC injection brake operation time	0.1s	0.5s	0	DC injection brake disabled	✔	✔	✔	
						0.1–10s	Set the operation time of the DC injection brake.				
	12		DC injection brake operation voltage	0.1%	6/4% *	0	DC injection brake disabled	✔	✔	✔	
						0.1–30%	Set the DC injection brake voltage (torque). * *Initial values differ according to the inverter capacity: FR-D720S-008SC and 014SC/ FR-D720S-025SC or more, FR-D740-012SC or more*				
Starting frequency	13		Starting frequency	0.01Hz	0.5Hz	0–60Hz	Starting frequency can be set.	✔	✔	✔	6-62
		571	Holding time at a start	0.1s	9999	0–10s	Set the holding time of Pr. 13 "Starting frequency".	✔	✔	✔	
						9999	Holding function at stat is invalid.				
V/f pattern matching applications V/F	14		Load pattern selection	1	0	0	For constant torque load	✔	✔	✔	6-46
						1	For variable-torque load				
						2	For constant torque elevators: at reverse rotation boost of 0%				
						3	For constant torque elevators: at forward rotation boost of 0%				
Jog operation	15		Jog frequency	0.01Hz	5Hz	0–400Hz	Set the frequency for jog operation.	✔	✔	✔	6-51
	16		Jog acceleration/ deceleration time	0.1s	0.5s	0–3600s	Set the acceleration/deceleration time for jog operation. Set the time taken to reach the frequency set in Pr. 20 "Acceleration/deceleration reference frequency" for acceleration/deceleration time (initial value is 50Hz). In addition, acceleration/deceleration time can not be set separately.	✔	✔	✔	

Tab. 6-1: *Parameter overview (3)*

Function	Parameter	Related parameters	Name	Increments	Initial value	Setting range	Description	Parameter copy	Parameter clear	All Parameter clear	Refer to page
								✔: enabled —: disabled			
MRS input selection	17		MRS input selection	1	0	0	Open input always	✔	✔	✔	6-91
						2	Normally closed input (NC contact input specifications)				
						4	External terminal: Normally closed input (NC contact input specifications) Communication: Normally open input				
—	18		Refer to Pr. 1 and Pr. 2								
	19		Refer to Pr. 3								
	20		Refer to Pr. 7 and Pr. 8								
Stall prevention operation	22		Stall prevention operation level	0.1%	150%	0	Stall prevention operation selection becomes invalid.	✔	✔	✔	6-33
						0.1–200%	The stall prevention operation level can be set.				
	23		Stall prevention operation level compensation factor at double speed	0.1%	9999	0–200%	The stall operation level can be reduced when operating at a high speed above the rated frequency.	✔	✔	✔	
						9999	Constant according to Pr. 22				
		48	Second stall prevention operation current	0.1%	9999	0	Second stall prevention operation invalid	✔	✔	✔	
						0–200%	The stall prevention operation level can be set.				
						9999	Same level as Pr. 22.				
		66	Stall prevention operation reduction starting frequency	0.01Hz	50Hz	0–400Hz	Set the frequency at which the stall operation level is started to reduce.	✔	✔	✔	
		156	Stall prevention operation selection	1	0	0–31/100/101	Pr. 156 allows you to select whether to use stall prevention or not according to the acceleration/deceleration status.	✔	✔	✔	
		157	OL signal output timer	0.1s	0s	0–25s	Set the output start time of the OL signal output when stall prevention is activated.	✔	✔	✔	
						9999	Without the OL signal output				
—	24 – 27		Refer to Pr. 4 to Pr. 6								
Acceleration/deceleration pattern	29		Acceleration/deceleration pattern selection	1	0	0	Linear acceleration/deceleration	✔	✔	✔	6-64
						1	S-pattern acceleration/deceleration A				
						2	S-pattern acceleration/deceleration B				
Selection of regeneration unit	30		Regenerative function selection	1	0	0	Brake unit FR-BU2, High power factor converter FR-HC, Power regeneration common converter FR-CV	✔	✔	✔	6-84
						1	High-duty brake resistor FR-ABR				
						2	High power factor converter FR-HC (when an automatic restart after instantaneous power failure is selected)				
		70	Special regenerative brake duty	0.1%	0%	0–30%	Set this parameter when a high duty brake resistor or power regeneration converter is used.	✔	✔	✔	

Tab. 6-1: *Parameter overview (4)*

Function	Parameter	Related parameters	Name	Increments	Initial value	Setting range	Description	Parameter copy	Parameter clear	All Parameter clear	Refer to page
								✔: enabled —: disabled			
Avoid mechanical resonance points	31		Frequency jump 1A	0.01Hz	9999	0–400Hz/ 9999	1A to 1B, 2A to 2B, 3A to 3B are frequency jumps 9999: Function invalid	✔	✔	✔	6-42
	32		Frequency jump 1B	0.01Hz	9999	0–400Hz/ 9999		✔	✔	✔	
	33		Frequency jump 2A	0.01Hz	9999	0–400Hz/ 9999		✔	✔	✔	
	34		Frequency jump 2B	0.01Hz	9999	0–400Hz/ 9999		✔	✔	✔	
	35		Frequency jump 3A	0.01Hz	9999	0–400Hz/ 9999		✔	✔	✔	
	36		Frequency jump 3B	0.01Hz	9999	0–400Hz/ 9999		✔	✔	✔	
Speed display and speed setting	37		Speed display	0.001	0	0	Frequency display, setting	✔	✔	✔	6-109
						0.01–9998	Set the machine speed at 60Hz.				
RUN key rotation direction selection	40		RUN key rotation direction selection	1	0	0	Forward rotation	✔	✔	✔	6-282
						1	Reverse rotation				
Detection of output frequency (SU, FU)	41		Up-to-frequency sensitivity (SU output)	0.1%	10%	0–100%	Set the level where the SU signal turns on.	✔	✔	✔	6-103
	42		Output frequency detection (FU output)	0.01Hz	6Hz	0–400Hz	Set the frequency where the FU signal turns on.	✔	✔	✔	
	43		Output frequency detection for reverse rotation	0.01Hz	9999	0–400Hz	Set the frequency where the FU signal turns on in reverse rotation.	✔	✔	✔	
						9999	Same as Pr. 42 setting				
—	44 45		Refer to Pr. 7 and Pr. 8								
	46		Refer to Pr. 0								
	47		Refer to Pr. 3								
	48		Refer to Pr. 22								
—	51		Refer to Pr. 9								

Tab. 6-1: *Parameter overview (5)*

Function	Parameter	Related parameters	Name	Increments	Initial value	Setting range	Description	Parameter copy	Parameter clear	All Parameter clear	Refer to page
								✔: enabled —: disabled			
Display functions	52		DU/PU main display data selection	1	0	0/5/8–12/14/20/23–25/52–55/61/62/64/100	Selects monitor to be displayed on the operation panel and parameter unit and monitor to be output to the terminal AM. 0: Output frequency (Pr. 52) 1: Output frequency (Pr. 158) 2: Output current (Pr. 158) 3: Output voltage (Pr. 158) 5: Frequency setting value 8: Converter output voltage 9: Regenerative brake duty 10: Electronic thermal relay function load factor 11: Output current peak value 12: Converter output voltage peak value 14: Output power 20: Cumulative energization time (Pr. 52) 21: Reference voltage output (Pr. 158) 23: Actual operation time (Pr. 52) 24: Motor load factor 25: Cumulative power (Pr. 52) 52: PID set point 53: PID measured value 54: PID deviation (Pr. 52) 55: I/O terminal status (Pr. 52) 61: Motor thermal load factor 62: Inverter thermal load factor 64: PTC thermistor resistance 100: Set frequency is displayed during a stop and output frequency is displayed during operation (Pr. 52).	✔	✔	✔	6-111
	158		AM terminal function selection	1	1	1–3/5/8–12/14/21/24/52/53/61/62		✔	✔	✔	
		170	Watt-hour meter clear	1	9999	0	Set "0" to clear the watt-hour meter monitor.	✔	—	✔	
						10	Set the maximum value when monitoring from communication to 0 to 9999kWh.				
						9999	Set the maximum value when monitoring from communication to 0 to 65535kWh.				
		171	Operation hour meter clear	1	9999	0/9999	Set "0" in the parameter to clear the watt hour monitor. Setting "9999" has no effect.	✔	✔	✔	
		268	Monitor decimal digits selection	1	9999	0	Displays the monitor as integral value.	✔	—	✔	
						1	Displays the monitor in increments of 0.1.				
						9999	No fixed decimal position				
		563	Energizing time carrying-over times	1	0	0–65535	The numbers of cumulative energizing time monitor exceeded 65535h is displayed. Reading only	—	—	—	
		564	Operating time carrying-over times	1	0	0–65535	The numbers of operation time monitor exceeded 65535h is displayed. Reading only	—	—	—	
		891	Cumulative power monitor digit shifted times	1	9999	0–4	Set the number of times to shift the cumulative power monitor digit. Clamp the monitoring value at maximum.	✔	✔	✔	
						9999	No shift Clear the monitor value when it exceeds the maximum value.				

Tab. 6-1: *Parameter overview (6)*

Function	Parameter	Related parameters	Name	Increments	Initial value	Setting range	Description	Parameter copy	Parameter clear	All Parameter clear	Refer to page
								✔: enabled —: disabled			
Change of the monitor output from terminal AM	55		Frequency monitoring reference	0.01Hz	50Hz	0–400Hz	Set the full-scale value to output the output frequency monitor value to terminal AM.	✔	✔	✔	6-118
	56		Current monitoring reference	0.01	Rated inverter output current	0–500	Set the full-scale value to output the output current monitor value to terminal AM.	✔	—	✔	
Restart operation after instantaneous power failure	57		Restart coasting time	0.1s	9999	0	The coasting time is as follows: FR-D720S-070SC or less, FR-D740-036SC or less:. . . . 1 s, FR-D720S-100SC, FR-D740-050SC or more:. . . 2 s	✔	✔	✔	6-123
						0.1–5s	Set the waiting time for inverter-triggered restart after an instantaneous power failure.				
						9999	No restart				
	58		Restart cushion time	0,1 s	1 s	0–60 s	Set a voltage starting time at restart.	✔	✔	✔	
		162	Automatic restart after instantaneous power failure selection	1	1	0	With frequency search (When using the frequency search, consider the wiring length limit. (Refer to page 3-11.))	✔	✔	✔	
						1	Without frequency search (Reduced voltage system)				
						10	Frequency search at every start				
						11	Reduced voltage system at every start				
		165	Stall prevention operation level for restart	0.1%	150%	0–200%	Consider the rated inverter current as 100% and set the stall prevention operation level during restart operation.	✔	✔	✔	
		298	Frequency search gain	1	9999	0–32767	When offline auto tuning is performed under V/f control, frequency search gain necessary for frequency search for automatic restart after instantaneous power failure is set as well as the motor constants (R1).	✔	—	✔	
						9999	Uses the Mitsubishi motor (SF-JR, SF-HRCA) constants				
		299	Rotation direction detection selection at restarting	1	0	0	Without rotation direction detection	✔	✔	✔	
						1	With rotation direction detection				
						9999	When Pr. 78 = "0", the rotation direction is detected. When Pr. 78 = "1", "2", the rotation direction is not detected.				
		611	Acceleration time at a restart	0.1s	9999	0–3600s	Set the acceleration time to reach the set frequency at a restart.	✔	✔	✔	
						9999	Acceleration time for restart is the normal acceleration time (e.g. Pr. 7).				

Tab. 6-1: *Parameter overview (7)*

Function	Parameter	Related parameters	Name	Increments	Initial value	Setting range	Description		Parameter copy	Parameter clear	All Parameter clear	Refer to page
									✔: enabled —: disabled			
Remote setting function	59		Remote function selection	1	0	0	RH, RM, RL signal function	Frequency setting storage function	✔	✔	✔	6-55
							Multi-speed setting	—				
						1	Remote setting	Yes				
						2	Remote setting	No				
						3	Remote setting	No (Turning STF/STR off clears remote setting frequency.)				
Energy saving control selection V/F	60		Energy saving control selection	1	0	0	Normal operation mode		✔	✔	✔	6-143
						9	Optimum excitation control mode (OEC)					
Retry function at alarm occurrence	65		Retry selection	1	0	0–5	An alarm for retry can be selected.		✔	✔	✔	6-138
		67	Number of retries at alarm occurrence	1	0	0	No retry function		✔	✔	✔	
						1–10	Set the number of retries at alarm occurrence. An alarm output is not provided during retry operation.					
						101–110	Set the number of retries at alarm occurrence. (The setting value minus 100 is the number of retries.) An alarm output is provided during retry operation.					
		68	Retry waiting time	0.1s	1s	0.1–600s	Set the waiting time from when an inverter alarm occurs until a retry is made.		✔	✔	✔	
		69	Retry count display erase	1	0	0	Clear the number of restarts succeeded by retry.		✔	✔	✔	
—	66		Refer to Pr. 22 and Pr. 23									
	67 – 69		Refer to Pr. 65									
—	70		Refer to Pr. 30									

Tab. 6-1: *Parameter overview (8)*

Function	Parameter	Related parameters	Name	Increments	Initial value	Setting range	Description		Parameter copy	Parameter clear	All Parameter clear	Refer to page
									✔: enabled —: disabled			
Applied motor	71		Applied motor	1	0	0	Thermal characteristics of a standard motor		✔	✔	✔	6-72
						1	Thermal characteristics of the Mitsubishi constant-torque motor					
						40	Thermal characteristic of Mitsubishi high efficiency standard motor (SF-HR)					
						50	Thermal characteristic of Mitsubishi constant torque motor (SF-HRCA)					
						3	Standard motor	Select "offline auto tuning setting"				
						13	Constant-torque motor					
						23	Mitsubishi standard motor SF-JR 4P (≤ 1,5 kW)					
						43	Mitsubishi high efficiency motor (SF-HR)					
						53	Mitsubishi constant-torque motor (SF-HRCA)					
		450	Second applied motor	1	9999	0	Thermal characteristics of a standard motor		✔	✔	✔	
						1	Thermal characteristics of the Mitsubishi constant-torque motor					
						9999	Second motor is invalid (thermal characteristic of the first motor (Pr.71))					
Carrier frequency and Soft-PWM selection	72		PWM frequency selection	1	1	0–15	PWM carrier frequency can be changed. The setting displayed is in [kHz]. Note that 0 indicates 0.7kHz, 15 indicates 14.5kHz.		✔	✔	✔	6-144
		240	Soft-PWM operation selection	1	1	0	Soft-PWM invalid		✔	✔	✔	
						1	When Pr. 72 = "0 to 5", Soft-PWM is valid.					
		260	PWM frequency automatic switchover	1	0	0	PWM carrier frequency is constant independently of load.		✔	✔	✔	
						1	Decreases PWM carrier frequency automatically when load increases.					
Analog input selection	73		Analog input selection	1	1		Terminal 2 input	Polarity reversible	✔	—	✔	6-147
						0	0–10V	Not used				
						1	0–5V					
						10	0–10V	With				
						11	0–5V					
		267	Terminal 4 input selection	1	0	0	Terminal 4 input 0/4 to 20mA		✔	—	✔	
						1	Terminal 4 input 0 to 5V					
						2	Terminal 4 input 0 to 10V					

Tab. 6-1: *Parameter overview (9)*

Function	Parameter	Related parameters	Name	Increments	Initial value	Setting range	Description	Parameter copy	Parameter clear	All Parameter clear	Refer to page
								✔: enabled —: disabled			
Noise elimination at the analog input	74		Input filter time constant	1	1	0–8	The primary delay filter time constant for the analog input can be set. A larger setting results in a larger filter.	✔	✔	✔	6-152
Reset selection/ disconnected PU/PU stop	75		Reset selection/ disconnected PU/PU stop	1	14	0–3/14–17	You can select the reset input acceptance, disconnected PU (operation panel/FR-PU04/ FR-PU07) connector detection function and PU stop function. For the initial value, reset always enabled, without disconnected PU detection, and with PU stop function are set.	✔	—	—	6-160
Prevention of parameter rewrite	77		Parameter write selection	1	0	0	Write is enabled only during a stop	✔	✔	✔	6-165
						1	Parameter write is disabled.				
						2	Parameter write is enabled in any operation mode regardless of operation status. *Note: Parameters that can generally be written during operation should not be written as well with this setting.*				
Prevention of reverse rotation of the motor	78		Reverse rotation prevention selection	1	0	0	Both forward and reverse rotations allowed	✔	✔	✔	6-167
						1	Reverse rotation disallowed				
						2	Forward rotation disallowed				
Operation mode selection	79	◎	Operation mode selection	1	0	0	External/PU switch over mode	✔	✔ ①	✔ ①	6-172
						1	Fixed to PU operation mode				
						2	Fixed to External operation mode				
						3	External/PU combined operation mode 1				
						4	External/PU combined operation mode 2				
						6	Switch-over mode				
						7	External operation mode (PU operation interlock)				
		340	Communication start-up mode selection	1	0	0	As set in Pr. 79.	✔	✔	✔	6-184
						1	Started in the network operation mode.				
						10	Started in the network operation mode. Operation mode can be changed between the PU operation mode and network operation mode from the operation panel.				

Tab. 6-1: *Parameter overview (10)*

① These parameters are communication parameters that are not cleared when parameter clear (all clear) is executed from RS485 communication. (Refer to section 6.18 for RS485 communication).

Function	Parameter	Related parameters	Name	Increments	Initial value	Setting range	Description	Parameter copy	Parameter clear	All Parameter clear	Refer to page
								✔: enabled —: disabled			
Selection of control method GP MFVC	80		Motor capacity	0.01kW	9999	0.1–7.5kW	Set the applied motor capacity.	✔	✔	✔	6-29
						9999	V/f control is performed				
Offline auto tuning	82		Motor excitation current	0.01A	9999	0–500A	Set motor excitation current (no load current)	✔	—	✔	6-74
						9999	Uses the Mitsubishi motor (SF-JR, SF-HRCA) constants				
	83		Motor rated voltage	0.1V	200V/ 400V *	0–1000V	Set the rated motor voltage (V). ** The initial value differs according to the voltage class: 200V/400V*	✔	✔	✔	
	84		Rated motor frequency	0.01Hz	50Hz	10–120Hz	Set the rated motor frequency (Hz).	✔	✔	✔	
		90	Motor constant (R1)	0.001Ω	9999	0–50Ω	Tuning data (The value measured by offline auto tuning is automatically set.)	✔	—	✔	
						9999	Use constants of the Mitsubishi motor (SF-JR, SF-HR, SF-JRCA, SF-HRCA)				
		96	Auto tuning setting/ status	1	0	0	Offline auto tuning is not performed	✔	—	✔	
						11	For general-purpose magnetic flux vector control Offline auto tuning is performed without motor running (motor constant (R1) only)				
						21	Offline auto tuning for V/F control (automatic restart after instantaneous power failure (with frequency search))				
—	96		Refer to Pr. 82 to 84								

Tab. 6-1: *Parameter overview (11)*

Function	Parameter	Related parameters	Name	Increments	Initial value	Setting range	Description	Parameter copy	Parameter clear	All Parameter clear	Refer to page
								✔: enabled —: disabled			
Communication initial setting	117		PU communication station	1	0	0–31 (0–247)	Set the inverter station numbers when two or more inverters are connected to one personal computer. When "1" (Modbus-RTU protocol) is set in Pr. 549, the setting range within parantheses is applied.	✔	✔ ①	✔ ①	6-198
	118		PU communication speed	1	192	48/96/ 192/384	Set the communication speed. The setting value × 100 equals the communication speed. For example, the communication speed is 19200bps when the setting value is "192".	✔	✔ ①	✔ ①	
	119		PU communication stop bit length	1	1	0	Stop bit length: 1bit data length: 8bit	✔	✔ ①	✔ ①	
						1	Stop bit length: 2bit data length: 8bit				
						10	Stop bit length: 1bit data length: 7bit				
						11	Stop bit length: 2bit data length: 7bit				
	120		PU communication parity check	1	2	0	Without parity check (for Modbus-RTU: stop bit length: 2bit)	✔	✔ ①	✔ ①	
						1	With odd parity check (for Modbus-RTU: stop bit length: 1bit)				
						2	With even parity check (for Modbus-RTU: stop bit length: 1bit)				
	121		Number of PU communication retries	1	1	0–10	If the number of consecutive errors exceeds the permissible value, the inverter will come to an alarm stop.	✔	✔ ①	✔ ①	
						9999	If a communication error occurs, the inverter will not come to an alarm stop.				
	122		PU communication check time interval	0.1s	9999	0	No PU connector communication	✔	✔ ①	✔ ①	
						0.1–999.8s	Set the communication check time interval. If a no-communication state persists for longer than the permissible time, the inverter will come to an alarm stop.				
						9999	No communication check				
	123		PU communication waiting time setting	1	9999	0–150ms	Set the waiting time between data transmission to the inverter and response.	✔	✔ ①	✔ ①	
						9999	Set with communication data.				

Tab. 6-1: *Parameter overview (12)*

① These parameters are communication parameters that are not cleared when parameter clear (all clear) is executed from RS485 communication. (Refer to section 6.18 for RS485 communication).

Function	Parameter	Related parameters	Name	Increments	Initial value	Setting range	Description		Parameter copy	Parameter clear	All Parameter clear	Refer to page
									✔: enabled —: disabled			
Communication initial setting	124		PU communication CR/LF presence/ absence selection	1	1	0	Without CR/LF		✔	✔ ①	✔ ①	6-198
						1	With CR					
						2	With CR/LF					
		342	Communication E²PROM write selection	1	0	0	Parameter values written by communication are written to the E²PROM and RAM.		✔	✔	✔	
						1	Parameter values written by communication are written to the RAM.					
		343	Communication error count	1	0	Read only	Display the number of communication errors during Modbus-RTU communication. Read only. Displayed only when Modbus-RTU protocol is selected.		—	—	—	
		502	Stop mode selection at communication error	1	0	0	You can select the inverter operation if a communication error occurs.	Coasts to stop	✔	✔	✔	
						1/2		Decelerates to stop				
		549	Protocol selection	1	0	0	Mitsubishi inverter (computer link) protocol)	After setting change, reset (switch power off, then on) the inverter. The setting change is reflected after a reset.	✔	✔ ①	✔ ①	
						1	Modbus-RTU protocol					

Tab. 6-1: *Parameter overview (13)*

① These parameters are communication parameters that are not cleared when parameter clear (all clear) is executed from RS485 communication. (Refer to section 6.18 for RS485 communication).

Function	Parameter	Related parameters	Name	Increments	Initial value	Setting range	Description		Parameter copy	Parameter clear	All Parameter clear	Refer to page
									✔: enabled —: disabled			
Change of analog input frequency, adjustment of voltage, current input and frequency (calibration)	125	◎	Terminal 2 frequency setting gain frequency	0.01Hz	50Hz	0–400Hz	Set the frequency of terminal 2 input gain (maximum).		✔	—	✔	6-153
	126	◎	Terminal 4 frequency setting gain frequency	0.01Hz	50Hz	0–400Hz	Set the frequency of terminal 4 input gain (maximum).		✔	—	✔	
		241	Analog input display unit switch over	1	0	0	Displayed in %	Select the unit for analog input display.	✔	✔	✔	
						1	Displayed in V/mA					
		C2 (902)	Terminal 2 frequency setting bias frequency	0.01Hz	0Hz	0–400Hz	Set the frequency on the bias side of terminal 2 input.		✔	—	✔	
		C3 (902)	Terminal 2 frequency setting bias	0.1%	0%	0–300%	Set the converted % of the bias side voltage (current) of terminal 2 input.		✔	—	✔	
		C4 (903)	Terminal 2 frequency setting gain	0.1%	100%	0–300%	Set the converted % of the gain side voltage of terminal 2 input.		✔	—	✔	
		C5 (904)	Terminal 4 frequency setting bias frequency	0.01Hz	0Hz	0–400Hz	Set the frequency on the bias side of terminal 4 input.		✔	—	✔	
		C6 (904)	Terminal 4 frequency setting bias	0.1%	20%	0–300%	Set the converted % of the bias side current (voltage) of terminal 4 input.		✔	—	✔	
		C7 (905)	Terminal 4 frequency setting gain	0.1%	100%	0–300%	Set the converted % of the gain side current (voltage) of terminal 4 input.		✔	—	✔	
PID control	127		PID control automatic switchover frequency	0.01Hz	9999	0–400Hz	Set the frequency at which the control is automatically changed to PID control.		✔	✔	✔	6-242
						9999	Without PID automatic switchover function					
	128		PID action selection	1	0	0	PID control invalid		✔	✔	✔	
						20	PID reverse action	Measured value input (terminal 4) Set value (terminal 2 or Pr. 133)				
						21	PID forward action					
						40–43	Dancer control					

Tab. 6-1: *Parameter overview (14)*

Function	Parameter	Related parameters	Name	Increments	Initial value	Setting range	Description	Parameter copy	Parameter clear	All Parameter clear	Refer to page
								✔: enabled —: disabled			
PID control	129		PID proportional band	0.1%	100%	0.1–1000%	If the proportional band is narrow (parameter setting is small), the manipulated variable varies greatly with a slight change of the measured value. Hence, as the proportional band narrows, the response sensitivity (gain) improves but the stability deteriorates, e.g. hunting occurs. Gain Kp = 1/proportional band	✔	✔	✔	6-242
						9999	No proportional control.				
	130		PID integral time	0.1 s	1s	0.1–3600s	Time required for only the integral (I) action to provide the same manipulated variable as that for the proportional (P) action. As the integral time decreases, the set point is reached earlier but hunting occurs more easily.	✔	✔	✔	
						9999	No integral control.				
	131		PID upper limit	0.1%	9999	0–100%	Set the upper limit value. If the feedback value exceeds the setting, the FUP signal is output. The maximum input (20mA/5V/10V) of the measured value (terminal 4) is equivalent to 100%.	✔	✔	✔	
						9999	No function				
	132		PID lower limit	0.1%	9999	0–100%	Set the lower limit value. If the process value falls below the setting range, the FDN signal is output. The maximum input (20mA/5V/10V) of the measured value (terminal 4) is equivalent to 100%	✔	✔	✔	
						9999	No function				
	133		PID action set point	0.01%	9999	0–100%	Used to set the set point for PID control in the PU operation mode.	✔	✔	✔	
						9999	Terminal 2 input is the set point.				
	134		PID differential time	0.01s	9999	0.01–10s	Time required for only the differential (D) action to provide the same manipulated variable as that for the proportional (P) action. As the differential time increases, greater response is made to a deviation change.	✔	✔	✔	
						9999	No differential control.				
		575	Output interruption detection time	0.1s	1 s	0–3600s	The inverter stops operation if the output frequency after PID operation remains at less than the Pr. 576 setting for longer than the time set in Pr. 575.	✔	✔	✔	
						9999	Without output interruption function				
		576	Output interruption detection level	0.01Hz	0Hz	0–400Hz	Set the frequency at which the output interruption processing is performed.	✔	✔	✔	
		577	Output interruption cancel level	0.1%	1000%	900–1100%	Set the level (Pr. 577 minus 1000%) at which the PID output interruption function is canceled.	✔	✔	✔	

Tab. 6-1: *Parameter overview (15)*

Function	Parameter	Related parameters	Name	Increments	Initial value	Setting range	Description	Parameter copy	Parameter clear	All Parameter clear	Refer to page
								✔: enabled —: disabled			
Parameter unit language switchover	145		PU display language selection	1	1	0	Japanese	✔	—	—	6-282
						1	English				
						2	German				
						3	French				
						4	Spanish				
						5	Italian				
						6	Swedish				
						7	Finnish				
—	146		Parameter for manufacturer setting. Do not set.								
Detection of output current (Y12 signal) and Detection of zero current (Y13 signal)	150		Output current detection level	0.1%	150%	0–200%	Set the output current detection level. 100% is the rated inverter current.	✔	✔	✔	6-105
	151		Output current detection signal delay time	0.1s	0s	0–10s	Set the output current detection period. Set the time from when the output current has risen above the setting until the output current detection signal (Y12) is output.	✔	✔	✔	
	152		Zero current detection level	0.1%	5%	0–200%	Set the zero current detection level. Suppose that the rated inverter current at the specified overload capacity is 100%.	✔	✔	✔	
	153		Zero current detection time	0.01s	0.5s	0–1s	Set this parameter to define the period from when the output current drops below the Pr. 152 value until the zero current detection signal (Y13) is output.	✔	✔	✔	
		166	Output current detection signal retention time	0.1s	0.1s	0–10 s	Set the retention time when the Y12 signal is ON.	✔	✔	✔	
						9999	The Y12 signal ON status is retained. The signal is turned off at the next start.				
		167	Output current detection operation selection	1	0	0	Operation continues when the Y12 signal is ON	✔	✔	✔	
						1	The inverter is brought to trip when the Y12 signal is ON. (E.CDO)				
—	156 157		Refer to Pr. 22								
—	158		Refer to Pr. 52								
—	160	◎	Extended function display selection	1	0	0	Displays simple mode and extended parameters	✔	✔	✔	6-168
						9999	Displays only the simple mode parameters				

Tab. 6-1: *Parameter overview (16)*

Function	Parameter	Related parameters	Name	Increments	Initial value	Setting range	Description		Parameter copy	Parameter clear	All Parameter clear	Refer to page
									✔: enabled —: disabled			
Operation selection of the operation panel	161		Frequency setting/key lock operation selection	1	0	0	Setting dial frequency setting mode	Key lock mode invalid	✔	—	✔	6-283
						1	Setting dial potentiometer mode					
						10	Setting dial frequency setting mode	Key lock mode valid				
						11	Setting dial potentiometer mode					
—	162 165		Refer to Pr. 57									
	166 167		Refer to Pr. 153									
	168 169		Parameter for manufacturer setting. Do not set.									
	170 171		Refer to Pr. 52									
Function assignment of input terminal	178		STF terminal function selection	1	60	0–5/7/8/10/12/14/16/18/24/25/37/60/62/65–67/9999	0: Low-speed operation command 1: Middle-speed operation command 2: High-speed operation command 3: Second function selection 4: Terminal 4 input selection 5: Jog operation selection 7: External thermal relay input 8: Fifteen speed selection 10: Inverter operation enable signal (FR-HC/FR-CV connection) 12: PU operation external interlock 14: PID control valid terminal 16: PU-external operation switchover 18: V/f switchover 24: Output stop 25: Start self-holding selection 37: Traverse function selection 60: Forward rotation command (assigned to STF terminal (Pr. 178) only) 61: Reverse rotation command (assigned to STR terminal (Pr. 179) only) 62: Inverter reset 65: NET/PU operation switchover 66: External/NET operation switchover 67: Command source switchover 9999: No function		✔	—	✔	6-88
	179		STR terminal function selection	1	61	0–5/7/8/10/12/14/16/18/24/25/37/61/62/65–67/9999			✔	—	✔	
	180		RL terminal function selection	1	0	0–5/7/8/10/12/14/16/18/24/25/37/62/65–67/9999			✔	—	✔	
	181		RM terminal function selection	1	1				✔	—	✔	
	182		RH terminal function selection	1	2				✔	—	✔	

Tab. 6-1: *Parameter overview (17)*

Function	Parameter	Related parameters	Name	Increments	Initial value	Setting range	Description	Parameter copy	Parameter clear	All Parameter clear	Refer to page
								✔: enabled —: disabled			
Function assignment of output terminal	190		RUN terminal function selection	1	0	0/1/3/4/7/8/ 11–16/25/ 26/46/47/ 64/70/80/ 81/90/91/ 93/95/96/ 98/99/100/ 101/103/ 104/107/ 108/111–116/125/ 126/146/ 147/164// 170/180/ 181/190/ 191/193/ 195/196/ 198/199/ 9999	0/100: Inverter running 1/101: Up to frequencych 3/103: Overload alarm 4/104: Output frequency detection 7/107: Regenerative brake prealarm 8/108: Electronic thermal relay function prealarm 11/111: Inverter operation ready 12/112: Output current detection 13/113: Zero current detection 14/114: PID lower limit 15/115: PID upper limit 16/116: PID forward/reverse rotation output 25/125: Fan fault output 26/126: Heatsink overheat prealarm 46/146: During deceleration at occurrence of power failure (retained until release) 47/147: PID control activated 64/164: During retry 70/170: PID output interruption 80/180: Safety monitor output 81/181: Safety monitor output 2 90/190: Life alarm 91/191: Alarm output 3 (power-off signal) 93/193: Current average monitor 95/195: Maintenance timer alarm 96/196: Remote output 98/198: Minor fault output 99/199: Alarm output 9999: No function 0–99: Source logic 100–199: Sink logic	✔	—	✔	6-98
	192		ABC terminal function selection	1	99	0/1/3/4/7/8/ 11–16/25/ 26/46/47/ 64/70/80/ 81/90/91/ 95/96/98/ 99/ 100/101/ 103/104/ 107/108/ 111–116/ 125/126/ 146/147/ 164/170/ 180/181/ 190/191/ 195/196/ 198/199/ 9999		✔	—	✔	
	197		Funktionszuweisung SO-Klemme		80	0/1/3/4/7/8/ 11–16/25/ 26/46/47/ 64/70/80/ 81/90/91/ 93/95/96/ 98/99/100/ 101/103/ 104/107/ 108/ 111–116/ 125/126/ 146/147/ 164/170/ 180/181/ 190/191/ 193/195/ 196/198/ 199		✔	—	✔	
—	232 – 239		Refer to Pr. 4 to Pr. 6								
	240		Refer to Pr. 72								
	241		Refer to Pr. 125 and Pr. 126								
Increase cooling fan life	244		Cooling fan operation selection	1	1	0	Operates at power on Cooling fan on/off control invalid (The cooling fan is always on at power on.)	✔	✔	✔	6-270
						1	Cooling fan on/off control valid				

Tab. 6-1: *Parameter overview (18)*

Function	Parameter	Related parameters	Name	Increments	Initial value	Setting range	Description		Parameter copy	Parameter clear	All Parameter clear	Refer to page
									✔: enabled —: disabled			
Slip compensation	245		Rated slip	0.01%	9999	0–50%	Used to set the rated motor slip.		✔	✔	✔	6-32
						9999	No slip compensation					
	246		Slip compensation time constant	0.01s	0.5s	0.01–10s	Used to set the response time of slip compensation. When the value is made smaller, response will be faster. However, as load inertia is greater, a regenerative over voltage (E.OV□) error is more liable to occur.		✔	✔	✔	
	247		Constant-output region slip compensation selection	1	9999	0	Slip compensation is not made in the constant output range (frequency range above the frequency set in Pr. 3)		✔	✔	✔	
						9999	Slip compensation is made in the constant output range.					
Ground fault detection	249		Earth (ground) fault detection at start	1	0	0	Without ground fault detection		✔	✔	✔	6-142
						1	With ground fault detection					
Selection of motor stopping method	250		Stop selection	0.1s	9999	0–100s	The motor is coasted to a stop when the preset time elapses after the start signal is turned off.	STF signal: Forward rotation start STR signal: Reverse rotation start	✔	✔	✔	6-86
						1000–1100s	The motor is coasted to a stop (Pr. 250 – 1000)s after the start signal is turned off.	STF signal: Start signal STR signal: Forward/reverse signal				
						8888	When the start signal is turned off, the motor decelerates to stop.	STF signal: Start signal STR signal: Forward/reverse signal				
						9999		STF signal: Forward rotation start STR signal: Reverse rotation start				

Tab. 6-1: *Parameter overview (19)*

Function	Parameter	Related parameters	Name	Increments	Initial value	Setting range	Description	Parameter copy	Parameter clear	All Parameter clear	Refer to page
								✔: enabled —: disabled			
Input/output phase failure protection selection	251		Output phase failure protection selection	1	1	0	Without output phase failure protection	✔	✔	✔	6-141
						1	With output phase failure protection				
		872	Input phase failure protection selection ①	1	1	0	Without input phase failure protection	✔	✔	✔	
						1	With input phase failure protection				
Display of the life of the inverter parts	255		Life alarm status display	1	0	(0–15)	Display whether the control circuit capacitor, main circuit capacitor, cooling fan, and each parts of the inrush current limit circuit has reached the life alarm output level or not. (Reading only)	—	—	—	6-271
	256		Inrush current limit circuit life display	1%	100%	(0–100%)	Display the deterioration degree of the inrush current limit circuit. (Reading only)	—	—	—	
	257		Control circuit capacitor life display	1%	100%	(0–100%)	Display the deterioration degree of the control circuit capacitor. (Reading only)	—	—	—	
	258		Main circuit capacitor life display	1%	100%	(0–100%)	Display the deterioration degree of the main circuit capacitor. (Reading only) The value measured by Pr. 259 is displayed.	—	—	—	
	259		Main circuit capacitor life measuring	1	0	0/1 (2/3/8/9)	Setting "1" and switching the power supply off starts the measurement of the main circuit capacitor life. When the Pr. 259 value is "3" after powering on again, the measuring is completed. Displays the deterioration degree in Pr. 258.	✔	✔	✔	
—	260		Refer to Pr. 72								
Operation at instantaneous power failure	261		Power failure stop selection	1	0	0	Coasting to stop When under voltage or power failure occurs, the inverter output is shut off.	✔	✔	✔	6-134
						1	When under voltage or a power failure occurs, the inverter can be decelerated to a stop.				
						2	When under voltage or a power failure occurs, the inverter can be decelerated to a stop. If power is restored during a power failure, the inverter accelerates again.				
—	267		Refer to Pr. 73								
	268		Refer to Pr. 52								
	269		Parameter for manufacturer setting: Do not set.								

Tab. 6-1: *Parameter overview (20)*

① Available only for the three-phase power input model.

Function	Parameter	Related parameters	Name	Increments	Initial value	Setting range	Description	Parameter copy	Parameter clear	All Parameter clear	Refer to page
								✔: enabled —: disabled			
Setting of the magnitude of frequency change by digital dial	295		Magnitude of frequency change setting	0,01	0	0	Invalid	✔	✔	✔	6-284
						0.01/0.10/ 1.00/10.00	The setting increments when the set frequency is changed by the setting dial can be set.				
Password function	296		Password lock level	1	9999	1–6/ 101–106	Select restriction level of parameter reading/ writing when a password is registered.	✔	—	✔	6-169
						9999	No password lock				
	297		Password lock/unlock	1	9999	1000–9998	Register a 4-digit password	✔	—	✔	
						(0–5)	Displays password unlock error count. (Reading only) (Valid when Pr. 296 = "101" to "106")				
						(9999)	No password lock (Reading only)				
—	298 299		Refer to Pr. 58								
Communication	338		Communication operation command source	1	0	0	Operation command source communication	✔	✔ ①	✔ ①	6-186
						1	Operation command source external (start/stop)				
	339		Communication speed command source	1	0	0	Speed command source communication	✔	✔ ①	✔ ①	
						1	Speed command source external (Frequency setting from communication is invalid, terminal 2 setting from external is valid)				
						2	Speed command source external (Frequency setting from communication is valid, terminal 2 setting from external is invalid)				
		551	PU mode operation command source selection	1	9999	2	Selects the PU connector as the PU operation mode control source	✔	✔ ①	✔ ①	
						4	Selects the operation panel as the PU operation mode control source.				
						9999	Parameter unit automatic recognition Normally, operation panel is the command source. When the parameter unit is connected to the PU connector, PU is the command source.				
—	340		Refer to Pr. 79								
	342 343		Refer to Pr. 117 to Pr. 124								
	450		Refer to Pr. 71								

Tab. 6-1: *Parameter overview (21)*

① These parameters are communication parameters that are not cleared when parameter clear (all clear) is executed from RS485 communication. (Refer to section 6.18 for RS485 communication).

Function	Parameter	Related parameters	Name	Increments	Initial value	Setting range	Description		Parameter copy	Parameter clear	All Parameter clear	Refer to page
									✔: enabled —: disabled			
Remote output function (REM signal)	495		Remote output selection	1	0	0	Remote output data clear at powering off	Remote output data clear at inverter reset	✔	✔	✔	6-107
						1	Remote output data retention at powering off					
						10	Remote output data clear at powering off	Remote output data retention at inverter reset				
						11	Remote output data retention at powering off					
	496		Remote output data 1	1	0	0–4095	Output terminal can be switched on and off.		—	—	—	
—	502		Refer to Pr. 124									
Maintenance of parts	503		Maintenance timer	1	0	0 (1–9998)	Display the cumulative energizing time of the inverter in 100h increments. Reading only Writing the setting of "0" clears the cumulative energizing time.		—	—	—	6-276
	504		Maintenance timer alarm output set time	1	9999	0–9998	Set the time taken until when the maintenance timer alarm output signal (Y95) is output.		✔	—	✔	
						9999	No function					
—	549		Refer to Pr. 117 to Pr. 124									
	551		Refer to Pr. 338 and Pr. 339									

Tab. 6-1: *Parameter overview (22)*

Function	Parameter	Related parameters	Name	Increments	Initial value	Setting range	Description	Parameter copy	Parameter clear	All Parameter clear	Refer to page
								✔: enabled —: disabled			
Current average monitor signal	555		Current average time	0.1s	1s	0.1–1.0s	Set the time taken to average the current during start bit output (1s).	✔	✔	✔	6-277
	556		Data output mask time	0.1s	0s	0–20s	Set the time for not obtaining (mask) transient state data.	✔	✔	✔	
	557		Current average value monitor signal output reference current	0.01A	Rated inverter current	0–500A	Set the reference (100%) for outputting the signal of the current average value	✔	✔	✔	
—	561		Refer to Pr. 9								
	563 564		Refer to Pr. 52								
	571		Refer to Pr. 13								
	575 – 577		Refer to Pr. 127								
Traverse function	592		Traverse function selection	1	0	0	Traverse function invalid	✔	✔	✔	6-264
						1	Traverse function is valid only in the External operation mode				
						2	Traverse function is valid independently of operation mode				
	593		Maximum amplitude amount	0.1%	10%	0–25%	Amplitude amount during traverse operation	✔	✔	✔	
	594		Amplitude compensation amount during deceleration	0.1%	10%	0–50%	Compensation amount at the time of amplitude inversion (acceleration to deceleration)	✔	✔	✔	
	595		Amplitude compensation amount during acceleration	0.1%	10%	0–50%	Compensation amount at the time of amplitude inversion (deceleration to acceleration)	✔	✔	✔	
	596		Amplitude acceleration time	0.1s	5s	0.1–3600s	Acceleration time during traverse operation	✔	✔	✔	
	597		Amplitude deceleration time	0.1s	5s	0.1–3600s	Deceleration time during traverse operation	✔	✔	✔	
—	611		Refer to Pr. 57								
Reduce mechanical resonance	653		Speed smoothing control	0.1%	0	0–200%	The torque fluctuation is reduced to reduce vibration due to mechanical resonance.	✔	✔	✔	6-146
—	665		Refer to Pr. 882								
	872		Refer to Pr. 251								

Tab. 6-1: *Parameter overview (23)*

Function	Parameter	Related parameters	Name	Increments	Initial value	Setting range	Description	Parameter copy	Parameter clear	All Parameter clear	Refer to page
								✔: enabled —: disabled			
Regeneration avoidance function	882		Regeneration avoidance operation selection	1	0	0	Regeneration avoidance function invalid	✔	✔	✔	6-267
						1	Regeneration avoidance function is always valid				
						2	Regeneration avoidance function is valid only during a constant speed operation				
	883		Regeneration avoidance operation level	0.1V	400V/ 780V *	300–800V	Set the bus voltage level at which regeneration avoidance operates. When the bus voltage level is set to low, overvoltage error will be less apt to occur. However, the actual deceleration time increases. The set value must be higher than the "power supply voltage × $\sqrt{2}$. ** The initial value differs according to the voltage class: 200V/400V*	✔	✔	✔	
	885		Regeneration avoidance compensation frequency limit value	0.01Hz	6Hz	0–10Hz	Set the limit value of frequency which rises at activation of regeneration avoidance function.	✔	✔	✔	
						9999	Frequency limit invalid				
	886		Regeneration avoidance voltage gain	0.1%	100%	0–200%	Adjusts responsiveness at activation of regeneration avoidance. A larger setting of Pr. 886 will improve responsiveness to the bus voltage change. However, the output frequency could become unstable. When the load inertia of the motor is large, decrease the Pr. 886 setting.When vibration is not suppressed by decreasing the Pr. 886 setting, set a smaller value in Pr. 665.	✔	✔	✔	
		665	Regeneration avoidance frequency gain	0.1%	100%	0–200%					

Tab. 6-1: *Parameter overview (24)*

Function	Parameter	Related parameters	Name	Increments	Initial value	Setting range	Description	Parameter copy	Parameter clear	All Parameter clear	Refer to page
								✔: enabled —: disabled			
Free parameter	888		Free parameter 1	1	9999	0–9999	Parameters you can use for your own purposes. Used for maintenance, management, etc. by setting a unique number to each inverter when multiple inverters are used. Data is held even if the inverter power is turned off.	✔	—	—	6-281
	889		Free parameter 2	1	9999	0–9999		✔	—	—	
—	891		Refer to Pr. 52								
Adjustment of terminal AM output (calibration)	C1 (901)		AM terminal calibration	—	—	—	Calibrate the scale of the analog meter connected to terminal AM.	✔	—	✔	6-120
—	C2 (902) – C7 (905)		Refer to Pr. 125 and Pr. 126								
—	C22 (922) – C25 (923)		Parameter for manufacturer setting. Do not set.								
Buzzer control of the operation panel	990		PU buzzer control	1	1	0	Without buzzer	✔	✔	✔	6-285
						1	With buzzer				
Contrast adjustment of the parameter unit	991		PU contrast adjustment	1	58	0–63	Contrast adjustment of the LCD of the parameter unit (FR-PU04) can be performed. 0 (light) → 63 (dark)	✔	✔	✔	6-285
Clear parameters, Initial value change list	Pr.CL		Parameter clear	1	0	0/1	Setting "1" returns all parameters except calibration parameters to the initial values.				4-17
	ALLC		All parameter clear	1	0	0/1	Setting "1" returns all parameters to the initial values.				4-17
	Er.CL		Fault history clear	1	0	0/1	Setting "1" will clear eight past alarms.				7-19
	Pr.CH		Initial value change list	1	0	0	Displays the parameters changed from the initial value.				4-18

Tab. 6-1: *Parameter overview (25)*

NOTE The parameter number in parentheses is the one for use with the parameter unit (FR-PU04/ FR-PU07).

6.2 Adjust the output torque (current) of the motor

Purpose	Parameter that must be set		Refer to Section
Set starting torque manually	Manual torque boost	Pr. 0, Pr. 46,	6.2.1
Automatically control output current according to load	General-purpose magnetic flux vector control	Pr. 71, Pr. 80	6.2.2
Compensate for motor slip to secure low-speed torque	Slip compensation	Pr. 245–Pr. 247	6.2.3
Limit output current to prevent inverter trip	Stall prevention operation	Pr. 22, Pr. 23, Pr. 66, Pr. 156, Pr. 157	6.2.4

6.2.1 Manual torque boost (Pr. 0, Pr. 46) V/F

You can compensate for a voltage drop in the low-frequency region to improve motor torque reduction in the low-speed range. Motor torque in the low-frequency range can be adjusted to the load to increase the starting motor torque.

Switch-over between parameters 0 and 46 is possible via the RT input signal.

Pr. No.	Name	Initial Value		Setting Range	Description
0	Torque boost	FR-D720S-008SC to 042SC, FR-D740-022SC or less	6%	0–30%	Set the output voltage at 0Hz as %.
		FR-D720S-070SC and 100SC, FR-D740-036SC to 080SC	4%		
		FR-D740-120SC and 160SC	3%		
46	Second torque boost ①	9999		0–30%	Set the torque boost value when the RT signal is on.
				9999	Without second torque boost

Parameters referred to		Refer to Section
3	Base frequency	6.4.1
19	Base frequency voltage	6.4.1
71	Applied motor	6.7.2
178–182	Input terminal function selection	6.9.1

① The above parameter can be set when Pr. 160 = 0.

Starting torque adjustment

The set value indicates the percentage of the maximum output voltage at 0Hz by which the output voltage is increased. The voltage increases in direct proportion to the frequency from the time of startup until the operating frequency and voltage have been reached.

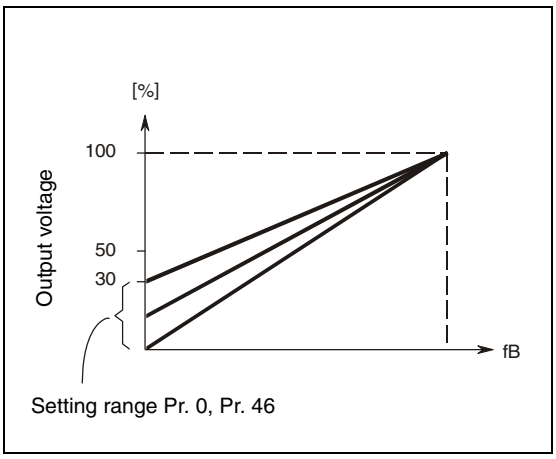

Fig. 6-1:
Relationship between output frequency and output voltage

CAUTION:

This setting should be made with great care.

If the set value is too high then the motor is operated with overvoltage and reaches magnetic saturation. The current consumption rises dramatically in a saturated motor without any concomitant improvement in torque. Adjust the parameter little by little (about 0.5%), and check the motor status each time. If the setting is too large, the motor will overheat. The guideline is about 10% at the greatest.

The requirements of the motor manufacturer must also be observed.

Set multiple base frequencies (RT signal, Pr. 46)

Use the second torque boost when changing the torque boost according to application or when using multiple motors by switching between them by one inverter.

Pr. 46 "Second torque boost" is made valid when the RT signal turns on. For the terminal used for RT signal input, set "3" in any of Pr. 178 to Pr. 182.

NOTES

The RT signal acts as the second function selection signal and makes the other second functions valid. (Refer to section 6.9.3.)

The amount of current flows in the motor may become large according to the conditions such as the motor characteristics, load, acceleration/deceleration time, wiring length, etc., resulting in an overcurrent trip (OL (overcurrent alarm) then E.OC1 (overcurrent trip during acceleration), overload trip (E.THM (motor overload trip), or E.THT (inverter overload trip). (When a fault occurs, release the start command, and decrease the Pr. 0 setting 1% by 1% to reset.)

The Pr. 0, Pr. 46 settings are valid only when V/f control is selected.

When using the inverter dedicated motor (constant torque motor) with the FR-D740-120SC and 160SC, set torque boost value to 2%. When Pr. 0 = 3% (initial value), if Pr. 71 value is changed to the setting for use with a constant-torque motor, the Pr. 0 setting changes to 2%.

Changing the terminal assignment using Pr. 178 to Pr. 182 "Input terminal function selection" may affect the other functions. Please make setting after confirming the function of each terminal.

6.2.2 General-purpose magnetic flux vector control (Pr. 9, Pr. 71, Pr. 80) GP MFVC

Large starting torque and low speed torque are available with general-purpose magnetic flux vector control.

What is general-purpose magnetic flux vector control?

The low speed torque can be improved by providing voltage compensation to flow a motor current which meets the load torque. With setting slip compensation (Pr. 245 to Pr. 247), output frequency compensation (slip compensation) is made so that the actual motor speed goes closer to a speed command value. Effective when load fluctuates drastically, etc.

General-purpose magnetic flux vector control of the FR-D700 SC series is the same function as the FR-E500 series.

Pr. No.	Name	Initial Value	Setting Range	Description
9	Electronic thermal O/L relay	Rated inverter output current ①	0–500A	Set the rated motor current.
71	Applied motor	0	0/1/3/13/23/40/43/50/53	By selecting a standard motor or constant torque motor, thermal characteristic and motor constants of each motor are set.
80	Motor capacity	9999	0.1–7.5kW	Applied motor capacity.
			9999	V/f control

Parameters referred to		Refer to Section
3	Base frequency	6.4.1
19	Base frequency voltage	6.4.1
71	Applied motor	6.7.2
77	Parameter write selection	6.16.2
178–182	Input terminal function selection	6.9.1

The above parameters can be set when Pr. 160 = 0.

① Refer to appendix A for the rated inverter output current.

NOTES

If the following conditions are not satisfied, select V/F control since malfunction such as insufficient torque and uneven rotation may occur.

- The motor capacity should be equal to or one rank lower than the inverter capacity. (The capacity should be 0.1kW or more.)
- Motor to be used is any of Mitsubishi standard motor (SF-JR, SF-HR 0.2kW or more) or Mitsubishi constant-torque motor (SF-JRCA four-pole, SF-HRCA 0.2kW to 7.5kW). When using a motor other than the above (other manufacturer's motor), perform offline auto tuning without fail.

Single-motor operation (one motor run by one inverter) should be performed.

The wiring length from inverter to motor should be within 30m. Otherwise, the drive behaviour may be impaired or the offline auto tuning may be cancelled and an appropriate alarm issued. Perform offline auto tuning in the state where wiring work is performed when the wiring length exceeds 30m.
Permissible wiring length between inverter and motor differs according to the inverter capacity and setting value of Pr. 72 "PWM frequency selection" (carrier frequency). (Refer to page 3-11).

Control mode

- V/f control and general-purpose magnetic flux vector control are available with the FR-D700 SC inverters.
- V/f control is for controlling frequency and voltage so that the ratio of frequency (f) to voltage (V) is constant when changing frequency.
- General-purpose magnetic flux vector control divides the inverter output current into an excitation current and a torque current by vector calculation, and makes voltage compensation to flow a motor current which meets the load torque.
  (General-purpose magnetic flux vector control is the same function as the FR-E500 series.)

Selection method of general-purpose magnetic flux vector control

Perform secure wiring.
(Refer to section 3.2.)

↓

Set the motor (Pr. 71) (refer to page 5-12).

Motor			Pr. 71 ①	Remarks
Mitsubishi	Standard motor High efficiency motor	SF-JR	0	Initial value
		SF-HR	40	—
		Others	3	Offline auto tuning is necessary ②
Mitsubishi	Constant-torque motor	SF-JRCA 4P	1	—
		SF-HRCA	50	—
		Others (SF-JRC, etc.)	13	Offline auto tuning is necessary ②
Other manufacturer's	Standard motor	—	3	Offline auto tuning is necessary ②
	Constant-torque motor	—	13	Offline auto tuning is necessary ②

① Refer to section 6.7.2 for other settings of Pr. 71.
② Refer to section 5.1.8 for offline auto tuning.

↓

Set the motor capacity (Pr. 80) (Refer to page 5-12).

↓

Set motor capacity (kW) in Pr. 80 "Motor capacity"
(V/f control is performed when the setting is "9999" (initial value).

Set the operation command. (Refer to section 5.2.)

↓

Select the start command and speed command.

1) Start command
   – Operation panel: Setting by pressing the RUN key
   – External command: Setting by forward rotation or reverse rotation command (terminal STF or STR)

2) Speed command
   – Operation panel: Setting by pressing the digital dial
   – External analog command (terminal 2 or 4):
     Give a speed command using the analog signal input to terminal 2 (or terminal 4).
   – Multi-speed command:
     The external signals (RH, RM, RL) may also be used to give speed command.

↓

Test run

- Perform offline auto tuning. (Pr. 96) (Refer to section 5.1.8.)
- Set motor excitation current. (Pr. 82) (Refer to section 6.7.3)
- Set slip compensation. (Pr. 245, Pr. 246, Pr. 247) (Refer to section 6.2.3.)

Fig. 6-2: *Selection method of general-purpose magnetic flux vector control*

NOTES

Uneven rotation slightly increases as compared to the V/f control. It is not suitable for machines such as grinding machine and wrapping machine which requires less uneven rotation at low speed.

When a surge voltage suppression filter (FFR-DT or FFR-SI) is connected between the inverter and motor, output torque may decrease.

Control method switching by external terminals (X18 signal)

- Use the V/f switchover signal (X18) to change the control method (V/f control and General-purpose magnetic flux vector control) with external terminal.
- Turn the X18 signal ON to change the currently selected control method (General-purpose magnetic flux vector control) to V/F control.

For the terminal used for X18 signal input, set "18" in any of Pr. 178 to Pr. 182 to assign the function.

NOTES

Switch the control method using external terminal (X18 signal) during an inverter stop. If control method between V/f control and General-purpose magnetic flux vector control is switched during the operation, the actual switchover does not take place until the inverter stops.
In addition, if control method is switched to V/f control during the operation, only second function becomes valid as V/f control and second functions are selected simultaneously in V/f control.

Changing the terminal assignment using Pr. 178 to Pr. 182 may affect the other functions. Make setting after confirming the function of each terminal.

6.2.3 Slip compensation (Pr. 245 to Pr. 247)

The inverter output current may be used to assume motor slip to keep the motor speed constant.

Pr. No.	Name	Initial Value	Setting Range	Description
245	Rated slip	9999	0.01–50%	Rated motor slip.
			0/9999	No slip compensation
246	Slip compensation time constant	0.5s	0.01–10s	Slip compensation response time. When the value is made smaller, response will be faster. However, as load inertia is greater, a regenerative overvoltage fault (E.OV□) is more liable to occur.
247	Constant-output region slip compensation selection	9999	0	Slip compensation is not made in the constant power range (frequency range above the frequency set in Pr. 3)
			9999	Slip compensation is made in the constant power range.

Parameters referred to	Refer to Section
1 Maximum frequency	6.3.1
3 Base frequency	6.4.1

The above parameters can be set when Pr. 160 = 0.

Slip compensation is validated when the motor rated slip calculated by the following formula is set to Pr. 245. Slip compensation is not made when Pr. 245 = 0 or 9999.

$$\text{Rated slip} = \frac{\text{Synchronous speed at base frequency} - \text{Rated speed}}{\text{Synchronous speed at base frequency}} \times 100\%$$

NOTES

When performing slip compensation, the output frequency may become greater than the set frequency. Set the Pr. 1 "Maximum frequency" value a little higher than the set frequency.

6.2.4 Stall prevention operation (Pr. 22, Pr. 23, Pr. 48, Pr. 66, Pr. 156, Pr. 157)

This function monitors the output current and automatically changes the output frequency to prevent the inverter from coming to trip due to overcurrent, overvoltage, etc.
It can also limit stall prevention and fast-response current limit operation during acceleration/deceleration, driving or regeneration.

- Stall prevention
  If the output current exceeds the stall prevention operation level, the output frequency of the inverter is automatically varied to reduce the output current.
- Fast-response current limit
  If the current exceeds the limit value, the output of the inverter is shut off to prevent an overcurrent.

Pr. No.	Name	Initial Value	Setting Range	Description
22	Stall prevention operation level ①	150%	0	Stall prevention operation invalid
			0.1–200%	Set the current value to start the stall prevention operation.
23	Stall prevention operation level compensation factor at double speed	9999	0–200%	The stall operation level can be reduced when operating at a high speed above the rated frequency.
			9999	Constant according to Pr. 22.
48	Second stall prevention operation current	9999	0	Stall prevention operation invalid
			0–200%	Second stall prevention operation level
			9999	Same level as Pr. 22.
66	Stall prevention operation reduction starting frequency	50Hz	0–400Hz	Set the frequency at which the stall operation level is started to reduce.
156	Stall prevention operation selection	0	0–31/ 100/101	Select whether stall prevention operation and fast-response current limit operation will be performed or not.
157	OL signal output timer	0s	0–25s	Output start time of the OL signal output when stall prevention is activated.
			9999	Without the OL signal output

Parameters referred to		Refer to Section
3	Base frequency	6.4.1
178–182	Input terminal function selection	6.9.1
190/ 192/197	Output terminal function selection	6.9.5

The above parameters can be set when Pr. 160 = 0.

① The above parameter allows its setting to be changed during operation even if "0" (initial value) is set in Pr. 77 "Parameter write selection".

Block diagram

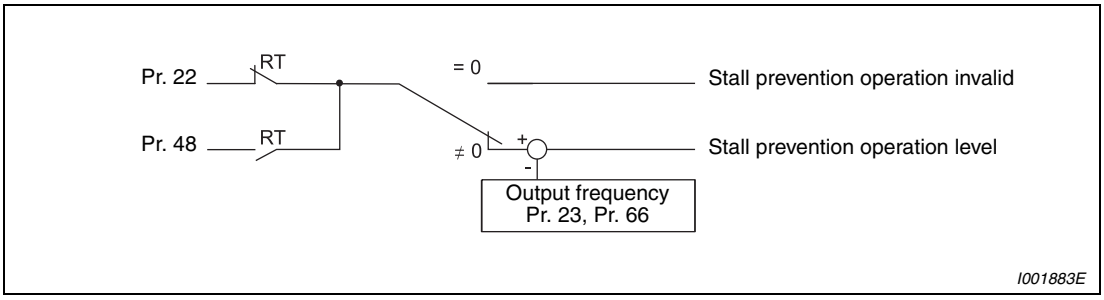

Fig. 6-3: *Stall prevention block diagram*

Setting of stall prevention operation level (Pr. 22)

Set in Pr. 22 the percentage of the output current to the rated inverter current at which stall prevention operation will be performed. Normally set this parameter to 150% (initial value).

Stall prevention operation stops acceleration (makes deceleration) during acceleration, makes deceleration during constant speed, and stops deceleration (makes acceleration) during deceleration.

When stall prevention operation is performed, the OL signal is output.

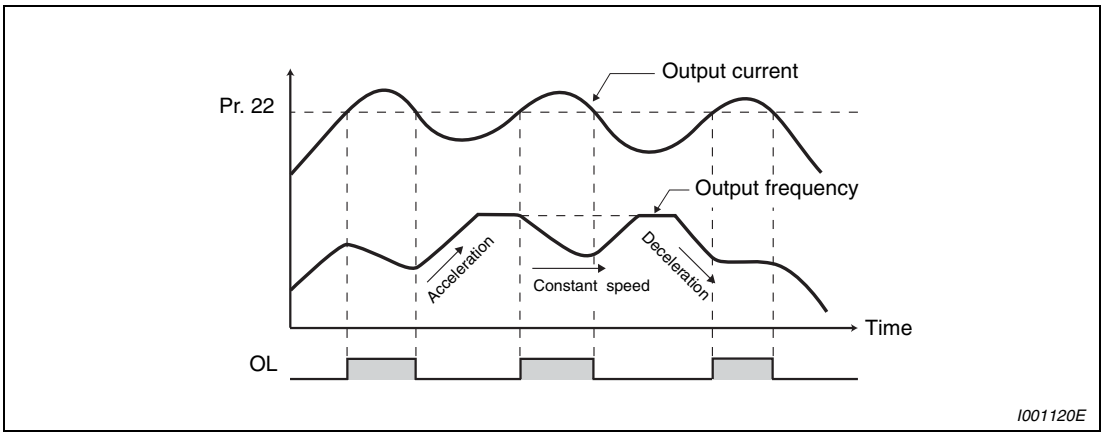

Fig. 6-4: *Stall prevention operation example*

NOTE

If an overload status lasts long, an inverter trip (e.g. electronic thermal relay function "E.THM") may occur.

Stall prevention operation signal output and output timing adjustment (OL signal, Pr. 157)

When the output current exceeds the stall prevention operation level and stall prevention is activated, the stall prevention operation signal (OL signal) turns on for longer than 100ms. When the output current falls to or below the stall prevention operation level, the output signal turns off. Use Pr. 157 "OL signal output timer" to set whether the OL signal is output immediately or after a preset period of time.

This operation is also performed when the regeneration avoidance function or oL (overvoltage stall) is executed.

For the OL signal, set "3" (positive logic) or "103" (negative logic) in Pr. 190, Pr. 192 or Pr. 197 and assign functions to the output terminal.

Pr. 157 Setting	Description
0	Output immediately.
0.1–25s	Output after the set time (s) has elapsed.
9999	Not output.

Tab. 6-2: *Setting of parameter 157*

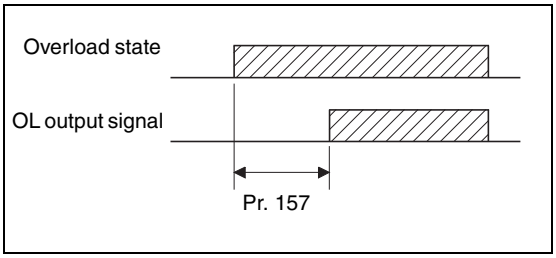

Fig. 6-5:
Output of the OL signal

I001330E

NOTES

If the frequency has fallen to 1Hz by stall prevention operation and remains for 3s, a fault (E.OLT) appears to trip the inverter output.

Changing the terminal assignment using Pr. 190, Pr. 192 or Pr. 197 may affect the other functions. Make setting after confirming the function of each terminal.

Setting of stall prevention operation in high frequency range (Pr. 22, Pr. 23, Pr. 66)

During high-speed operation above the rated motor frequency, acceleration may not be made because the motor current does not increase. If operation is performed in a high frequency range, the current at motor lockup becomes smaller than the rated output current of the inverter, and the protective function (OL) is not executed if the motor is at a stop.
To improve the operating characteristics of the motor in this case, the stall prevention level can be reduced in the high frequency region. This function is effective for performing operation up to the high-speed range on a centrifugal separator etc.

Pr. 23 sets the change in the current limiting in the frequency range starting at the frequency set by Pr. 66. For example, if Pr. 66 is set to 75Hz the motor stall prevention operation level at an output frequency of 150Hz will be reduced to 75% when Pr. 23 is set to 100%, and to 66% when Pr. 23 is set to 50% (see the formula below). Generally Pr. 66 is set to 50Hz and Pr. 23 to 100%.

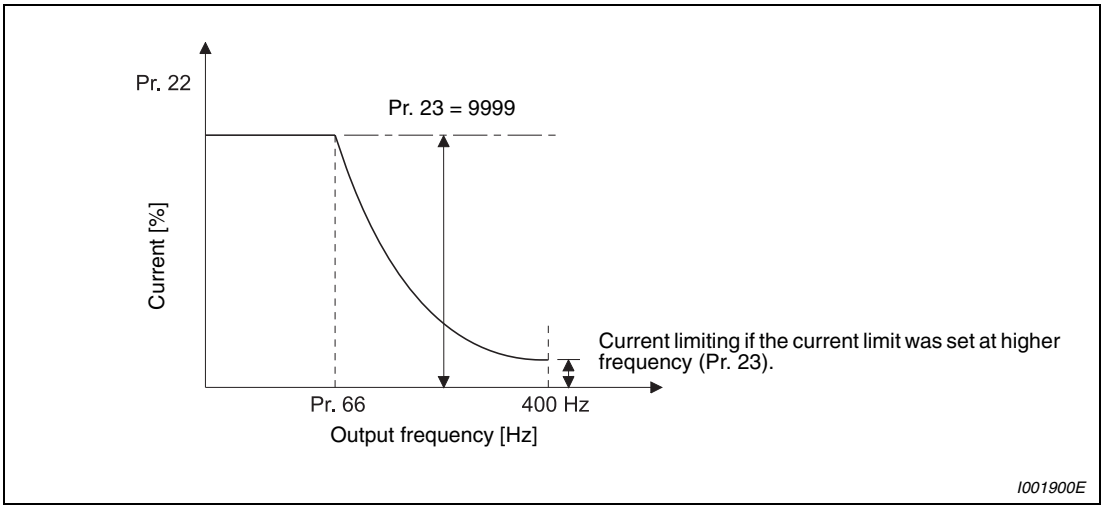

Fig. 6-6: *Stall prevention operation level*

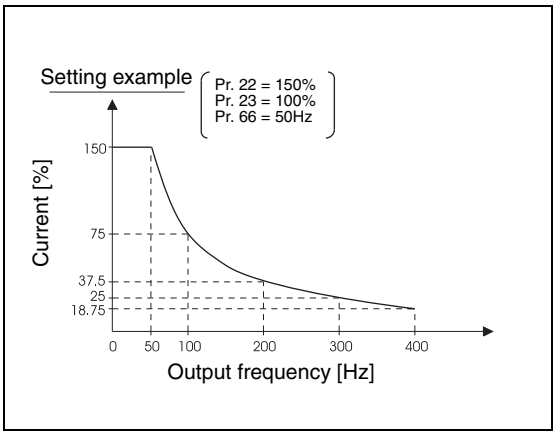

Fig. 6-7:
Stall prevention operation level when Pr. 22 = 150%, Pr. 23 = 100% and Pr. 66 = 50Hz

Formula for stall prevention operation level:

$$\text{Stall prevention operation level [\%]} = A + B \times \left[\frac{\text{Pr. 22} - A}{\text{Pr. 22} - B}\right] \times \left[\frac{\text{Pr. 23} - 100}{100}\right]$$

$$\text{where } A = \frac{\text{Pr. 66 [Hz]} \times \text{Pr. 22 [\%]}}{\text{Output frequency [Hz]}},\ B = \frac{\text{Pr. 66 [Hz]} \times \text{Pr. 22 [\%]}}{400\text{Hz}}$$

When Pr. 23 "Stall prevention operation level compensation factor at double speed" = 9999 (initial value), the stall prevention operation level is kept constant at the Pr. 22 setting up to 400Hz.

Set two types stall prevention operation levels (Pr. 48)

Turning RT signal on makes Pr. 48 "Second stall prevention operation current" valid.

For the terminal used for RT signal input, set "3" in any of Pr. 178 to Pr. 182 "Input terminal function selection" to assign the function.

NOTES

Changing the terminal assignment using Pr. 178 to Pr. 182 may affect the other functions. Make setting after confirming the function of each terminal.

The RT signal acts as the second function selection signal and makes the other second functions valid.

Limit the stall prevention operation and fast-response current limit operation according to the operating status (Pr. 156)

Refer to the following table and select whether fast-response current limit operation will be performed or not and the operation to be performed at OL signal output:

Pr. 156 Setting	Fast-Response Current Limit ③	Stall Prevention Operation Level			OL Signal Output	
		Acceleration	Constant Speed	Deceleration	Without Alarm	Stop with Alarm "E.OLT"
0	✔	✔	✔	✔	✔	—
1	—	✔	✔	✔	✔	—
2	✔	—	✔	✔	✔	—
3	—	—	✔	✔	✔	—
4	✔	✔	—	✔	✔	—
5	—	✔	—	✔	✔	—
6	✔	—	—	✔	✔	—
7	—	—	—	✔	✔	—
8	✔	✔	✔	—	✔	—
9	—	✔	✔	—	✔	—
10	✔	—	✔	—	✔	—
11	—	—	✔	—	✔	—
12	✔	✔	—	—	✔	—
13	—	✔	—	—	✔	—
14	✔	—	—	—	①	①
15	—	—	—	—	①	①
16	✔	✔	✔	✔	—	✔
17	—	✔	✔	✔	—	✔
18	✔	—	✔	✔	—	✔
19	—	—	✔	✔	—	✔
20	✔	✔	—	✔	—	✔
21	—	✔	—	✔	—	✔
22	✔	—	—	✔	—	✔
23	—	—	—	✔	—	✔
24	✔	✔	✔	—	—	✔
25	—	✔	✔	—	—	✔
26	✔	—	✔	—	—	✔
27	—	—	✔	—	—	✔
28	✔	✔	—	—	—	✔
29	—	✔	—	—	—	✔
30	✔	—	—	—	①	①
31	—	—	—	—	①	①
100 D ②	✔	✔	✔	✔	✔	—
100 R ②	—	—	—	—	①	①
101 D ②	—	✔	✔	✔	✔	—
101 R ②	—	—	—	—	①	①

Tab. 6-3: *Setting of parameter 156 (D = Driving, R = Regeneration)*

① Since both fast-response current limit and stall prevention are not activated, OL signal and E.OLT are not output.

② The settings "100" and "101" allow operations to be performed in the driving and regeneration modes, respectively. The setting "101" disables the fast-response current limit in the driving mode.

③ OL signal is not output at fast-response current limit operation.

NOTES

When the load is heavy or the acceleration/deceleration time is short, stall prevention is activated and acceleration/deceleration may not be made according to the preset acceleration/deceleration time. Set Pr. 156 and stall prevention operation level to the optimum values.

In vertical lift applications, make setting so that the fast-response current limit is not activated. Torque may not be produced, causing a drop due to gravity.

CAUTION:

- ***Do not set a small value as the stall prevention operation current. Otherwise, torque generated will reduce.***
- ***Always perform test operation.***
  Stall prevention operation during acceleration may increase the acceleration time.
  Stall prevention operation performed during constant speed may cause sudden speed changes.
  Stall prevention operation during deceleration may increase the deceleration time, increasing the deceleration distance.

6.3 Limit the output frequency

Purpose	Parameters that must be set		Refer to Section
Set upper limit and lower limit of output frequency	Maximum/minimum frequency	Pr. 1, Pr. 2, Pr. 18	6.3.1
Perform operation by avoiding machine resonance points	Frequency jump	Pr. 31–Pr. 36	6.3.2

6.3.1 Maximum and minimum frequency (Pr. 1, Pr. 2, Pr. 18)

You can limit the motor speed. Clamp the upper and lower limits of the output frequency.

Pr. No.	Name	Initial Value	Setting Range	Description
1	Maximum frequency	120Hz	0–120Hz	Set the upper limit of the output frequency.
2	Minimum frequency	0Hz	0–120Hz	Set the lower limit of the output frequency.
18	High speed maximum frequency ①	120Hz	120–400Hz	Set when performing the operation at 120Hz or more

Parameters referred to		Refer to Section
13	Starting frequency	6.6.2
15	Jog frequency	6.5.2
125	Terminal 2 frequency setting gain frequency	6.15.3
126	Terminal 4 frequency setting gain frequency	6.15.3

① The above parameter can be set when Pr. 160 = 0.

Set the maximum frequency

Set the upper limit of the output frequency in Pr. 1 "Maximum frequency". If the frequency of the frequency command entered is higher than the setting, the output frequency is clamped at the maximum frequency.

When you want to perform operation above 120Hz, set the upper limit of the output frequency to Pr. 18 "High speed maximum frequency". (When Pr. 18 is set, Pr. 1 automatically switches to the frequency of Pr. 18. When Pr. 18 is set, Pr. 18 automatically switches to the frequency of Pr. 1.)

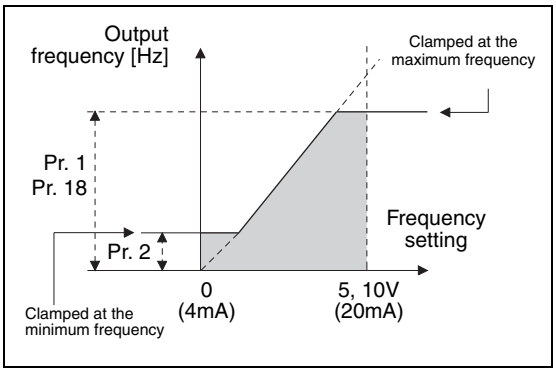

Fig. 6-8:
Maximum and minimum output frequency

I001100E

NOTE

When performing operation above 50Hz using the frequency setting analog signal, change Pr. 125 (Pr. 126) "Frequency setting gain". (Refer to section 6.15.3.) If only Pr. 1 or Pr. 18 is changed, operation above 50Hz cannot be performed.

Set the minimum frequency

Use Pr. 2 "Minimum frequency" to set the lower limit of the output frequency.

NOTES

When Pr. 15 "Jog frequency" is equal to or less than Pr. 2, the Pr. 15 setting has precedence over the Pr. 2 setting.

The output frequency is clamped by the Pr. 2 setting even the set frequency is lower than the Pr. 2 setting (The frequency will not decrease to the Pr. 2 setting.)

CAUTION:

If the Pr. 2 setting is higher than the Pr. 13 "Starting frequency" value, note that the motor will run at the set frequency according to the acceleration time setting by merely switching the start signal on, without entry of the command frequency.

6.3.2 Avoid mechanical resonance points (frequency jumps) (Pr. 31 to Pr. 36)

When it is desired to avoid resonance attributable to the natural frequency of a mechanical system, these parameters allow resonant frequencies to be jumped.

Pr. No.	Name	Initial Value	Setting Range	Description
31	Frequency jump 1A	9999	0–400Hz/9999	1A to 1B, 2A to 2B, 3A to 3B is frequency jumps 9999: Function invalid
32	Frequency jump 1B	9999	0–400Hz/9999	
33	Frequency jump 2A	9999	0–400Hz/9999	
34	Frequency jump 2B	9999	0–400Hz/9999	
35	Frequency jump 3A	9999	0–400Hz/9999	
36	Frequency jump 3B	9999	0–400Hz/9999	

Parameters referred to	Refer to Section
—	

The above parameters can be set when Pr. 160 = 0.

Up to three areas may be set, with the jump frequencies set to either the top or bottom point of each area.
The settings of frequency jumps 1A, 2A, 3A are jump points, and operation is performed at these frequencies in the jump areas.

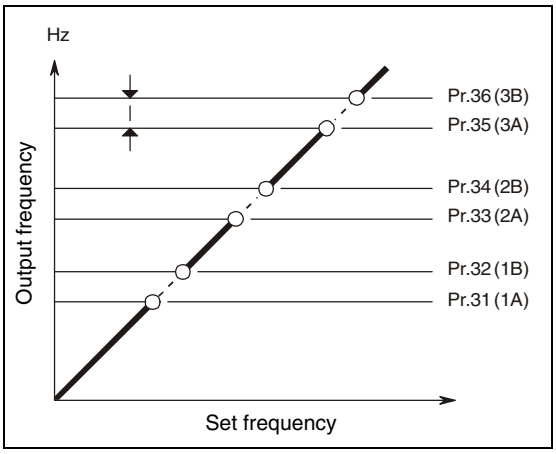

Fig. 6-9:
Definition of the jump areas

I000019C

The following diagrams show how the jump point is selected. The diagram on the left shows a sequence in which the jump takes place at the end of the area to be jumped, for which the lower frequency must be entered first. In the diagram on the right the jump takes place at the beginning of the frequency area to be jumped, for which the higher frequency must be entered first.

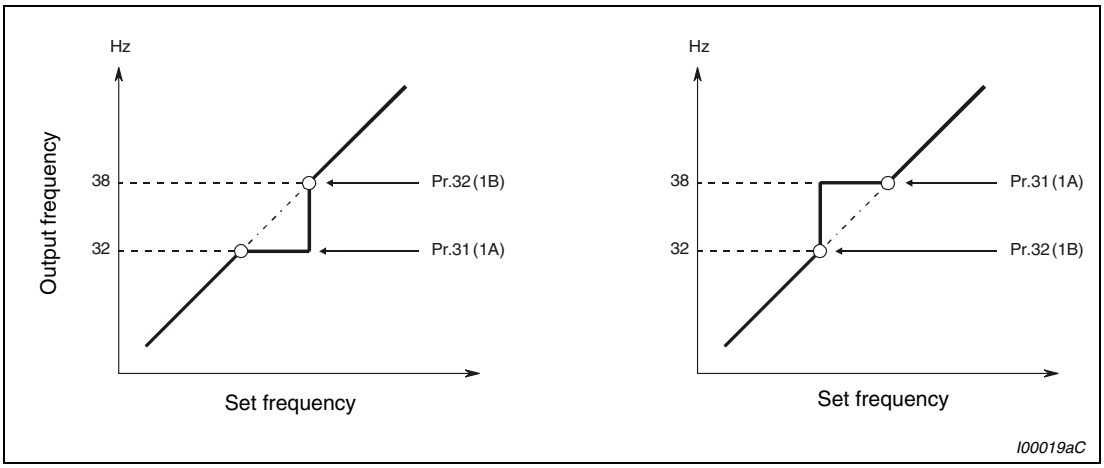

Fig. 6-10: *Selection of the jump point*

NOTE During acceleration/deceleration, the running frequency within the set area is valid.

6.4 Set V/f pattern

Purpose	Parameters that must be set		Refer to Section
Set motor ratings	Base frequency, Base frequency voltage	Pr. 3, Pr. 19, Pr. 47	6.4.1
Select a V/f pattern according to applications	Load pattern selection	Pr. 14	6.4.2

6.4.1 Base frequency, voltage (Pr. 3, Pr. 19, Pr. 47) V/F

Used to adjust the inverter outputs (voltage, frequency) to the motor rating.

Pr. No.	Name	Initial Value	Setting Range	Description
3	Base frequency	50Hz	0–400Hz	Set the frequency when the motor rated torque is generated. (50Hz/ 60Hz)
19	Base frequency voltage ①	8888	0–1000V	Set the rated motor voltage.
			8888	95% of power supply voltage
			9999	Same as power supply voltage
47	Second V/f (base frequency) ①	9999	0–400Hz	Set the base frequency when the RT signal is on.
			9999	Second V/f invalid

Parameters referred to		Refer to Section
14	Load pattern selection	6.4.2
29	Acceleration/deceleration pattern selection	6.6.3
83	Motor rated voltage	6.7.3
84	Rated motor frequency	6.7.3
178–182	Input terminal function selection	6.9.1
	General-purpose magnetic flux vector control	6.2.2

① The above parameter can be set when Pr. 160 = 0.

Setting of base frequency (Pr. 3)

When operating a standard motor, generally set the rated frequency of the motor to Pr. 3 "Base frequency".
When running the motor using commercial power supply-inverter switch-over operation, set Pr. 3 to the same value as the power supply frequency.
If the frequency given on the motor rating plate is "60Hz" only, always set to "60Hz". It may result in an inverter trip due to overload. Caution must be taken especially when Pr. 14 "Load pattern selection" = "1" (variable torque load)

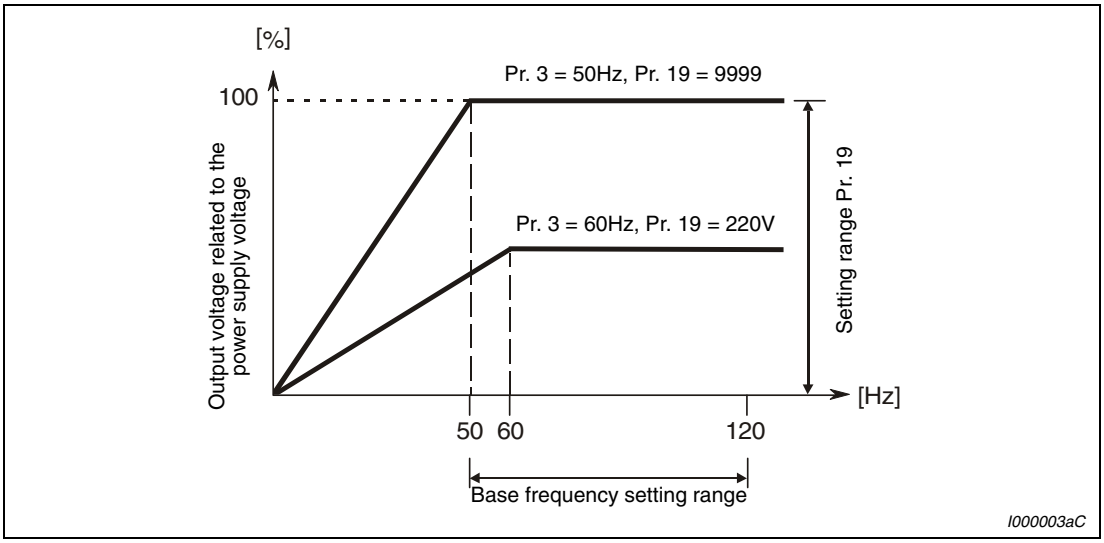

Fig. 6-11: Output voltage related to the output frequency

Set two kinds of base frequencies (Pr. 47)

Use the second base frequency when you want to change the base frequency, e.g. when using multiple motors by switching between them by one inverter.

Pr. 47 "Second V/f (base frequency)" is valid when the RT signal is on.

NOTES

The RT signal acts as the second function selection signal and makes the other second functions valid.

Set "3" in any of Pr. 178 to Pr. 182 "Input terminal function selection" and assign the RT signal.

Base frequency voltage setting (Pr. 19)

Use Pr. 19 "Base frequency voltage" to set the base voltage (e.g. rated motor voltage). If the setting is less than the power supply voltage, the maximum output voltage of the inverter is as set in Pr. 19.

Pr. 19 can be utilized in the following cases:

- When regeneration frequency is high (e.g. continuous regeneration)
  During regeneration, the output voltage becomes higher than the reference and may cause an overcurrent trip (E.OC□) due to an increased motor current.
- When power supply voltage variation is large
  When the power supply voltage exceeds the rated voltage of the motor, speed variation or motor overheat may be caused by excessive torque or increased motor current.

NOTES

When general-purpose magnetic flux vector control is selected, Pr. 3, Pr. 47 and Pr. 19 are invalid and Pr. 83 and Pr. 84 are valid.
Note that Pr. 3 or Pr. 47 value is valid as an inflection point of S-pattern when Pr. 29 "Acceleration/deceleration pattern selection" = 1 (S-pattern acceleration/deceleration A).

Changing the terminal assignment using Pr. 178 to Pr. 182 may affect the other functions. Make setting after confirming the function of each terminal.

Note that the output voltage of the inverter cannot exceed the power supply voltage.

6.4.2 Load pattern selection (Pr. 14) V/F

You can select the optimum output characteristic (V/f characteristic) for the application and load characteristics.

Pr. No.	Name	Initial Value	Setting Range	Description
14	Load pattern selection	0	0	For constant torque load
			1	For variable torque load
			2	For constant torque elevators (at reverse rotation boost of 0%)
			3	For constant torque elevators (at forward rotation boost of 0%)

Parameters referred to		Refer to Section
0	Torque boost	6.2.1
46	Second torque boost	6.2.1
3	Base frequency	6.4.1
178–182	Input terminal function selection	6.9.1
	General-purpose magnetic flux vector control	6.2.2

The above parameter can be set when Pr. 160 = 0.

For constant-torque load (Pr. 14 = 0, initial value)

At or less than the base frequency voltage, the output voltage varies linearly with the output frequency. Set this value when driving the load whose load torque is constant if the speed varies, e.g. conveyor, cart or roll drive.

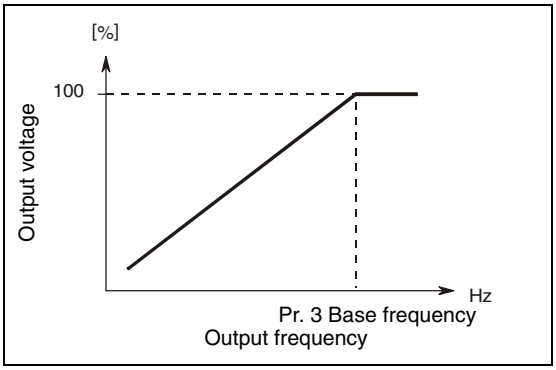

Fig. 6-12:
Constant-torque load

I001322C

For variable-torque load (Pr. 14 = 1)

At or less than the base frequency voltage, the output voltage varies with the output frequency in a square curve. Set this value when driving the load whose load torque varies in proportion to the square of the speed, e.g. fan or pump.

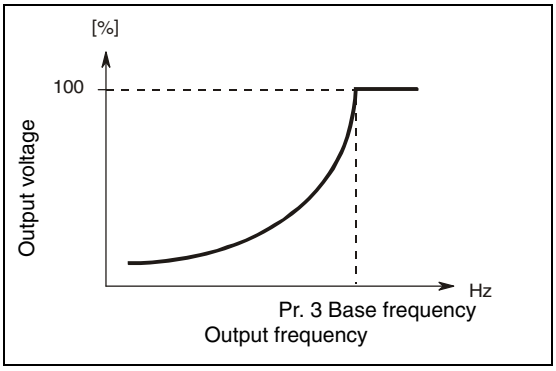

Fig. 6-13:
Variable-torque load

I001323C

Constant-torque load application (Pr. 14 = 2 oder 3)

Set "2" when a vertical lift load is fixed as power driving load at forward rotation and regenerative load at reverse rotation.
Pr. 0 "Torque boost" is valid during forward rotation and torque boost is automatically changed to "0%" during reverse rotation. Pr. 46 "Second torque boost" is made valid when the RT signal turns on.

Set "3" for an elevated load that is in the driving mode during reverse rotation and in the regenerative load mode during forward rotation according to the load weight, e.g. counterweight system.

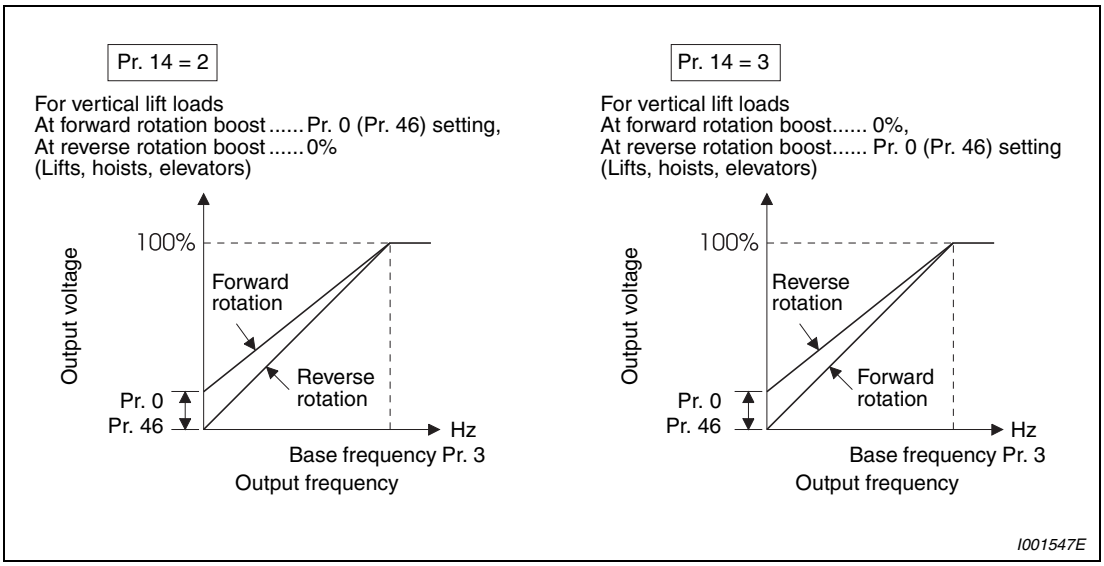

Fig. 6-14: *Characteristic with manual torque boost*

NOTES

For the RT signal, set "3" in any of Pr. 178 to Pr.182 "Input terminal function selection" to assign the function.

When torque is continuously regenerated as vertical lift load, it is effective to set the rated voltage in Pr. 19 "Base frequency voltage" to prevent trip due to current at regeneration.

In addition, when the RT signal is on, the other second functions are also valid.

Load pattern selection does not function under general-purpose magnetic flux vector control.

Changing the terminal assignment using Pr. 178 to Pr. 182 may affect the other functions. Make setting after confirming the function of each terminal.

6.5 Frequency setting by external terminals

Purpose	Parameters that must be set		Refer to Section
Make frequency setting by combination of terminals	Multi-speed operation	Pr. 4–Pr. 6, Pr. 24–Pr. 27 Pr. 232–Pr. 239	6.5.1
Perform jog operation	Jog operatio	Pr. 15, Pr. 16	6.5.2
Infinitely variable speed setting by terminals	Remote setting function	Pr. 59	6.5.3

6.5.1 Multi-speed setting operation (Pr. 4 to Pr. 6, Pr. 24 to Pr. 27, Pr. 232 to Pr. 239)

The frequency inverters have 15 fixed setting frequencies (speeds) which can be preset by the user as required via parameters 4, 5, 6, 24 to 27 as well as via parameters 232 to 239.

Any speed can be selected by merely turning on-off the contact signals (RH, RM, RL, REX signals).

Pr. No.	Name	Initial Value	Setting Range	Description
4	Multi-speed setting (high speed)	50Hz	0–400Hz	Set the frequency when RH turns on.
5	Multi-speed setting (middle speed)	30Hz	0–400Hz	Set the frequency when RM turns on.
6	Multi-speed setting (low speed)	10Hz	0–400Hz	Set the frequency when RL turns on.
24	Multi-speed setting (speed 4) ①	9999	0–400Hz/9999	Frequency from speed 4 to speed 15 can be set according to the combination of the RH, RM, RL and REX signals. 9999: not selected
25	Multi-speed setting (speed 5) ①	9999	0–400Hz/9999	
26	Multi-speed setting (speed 6) ①	9999	0–400Hz/9999	
27	Multi-speed setting (speed 7) ①	9999	0–400Hz/9999	
232	Multi-speed setting (speed 8) ①	9999	0–400Hz/9999	
233	Multi-speed setting (speed 9) ①	9999	0–400Hz/9999	
234	Multi-speed setting (speed 10) ①	9999	0–400Hz/9999	
235	Multi-speed setting (speed 11) ①	9999	0–400Hz/9999	
236	Multi-speed setting (speed 12) ①	9999	0–400Hz/9999	
237	Multi-speed setting (speed 13) ①	9999	0–400Hz/9999	
238	Multi-speed setting (speed 14) ①	9999	0–400Hz/9999	
239	Multi-speed setting (speed 15) ①	9999	0–400Hz/9999	

Parameters referred to		Refer to Section
15	JOG frequency	6.5.2
59	Remote function selection	6.5.3
79	Operation mode selection	6.17.1
178–182	Input terminal function selection	6.9.1

The above parameters allow its setting to be changed during operation in any operation mode even if "0" (initial value) is set in Pr. 77 "Parameter write selection".

① The above parameters can be set when Pr. 160 = 0.

Operation is performed at the frequency set in Pr. 4 when the RH signal turns on, Pr. 5 when the RM signal turns on, and Pr. 6 when the RL signal turns on.

Frequency from speed 4 to speed 15 can be set according to the combination of the RH, RM, RL and REX signals. Set the running frequencies in Pr. 24 to Pr. 27, Pr. 232 to Pr. 239. (In the initial value setting, speed 4 to speed 15 are unavailable.)

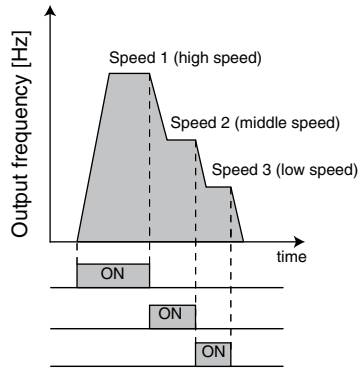

Fig. 6-15: *Multi-speed selection by external terminals*

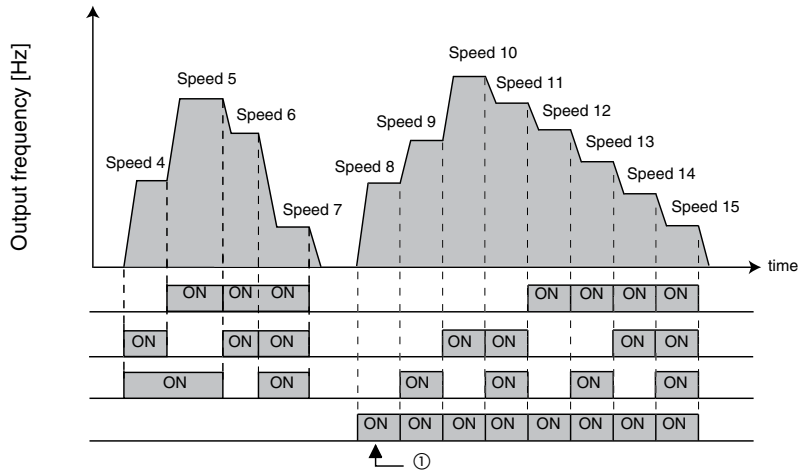

Fig. 6-16: *Multi-speed selection by external terminals*

① When "9999" is set in Pr. 232 "Multi-speed setting (speed 8)", operation is performed at frequency set in Pr. 6 when RH, RM and RL are turned off and REX is turned on.

NOTES

In the initial setting, if two or three speeds are simultaneously selected, priority is given to the set frequency of the lower signal. For example, when the RH and RM signals turn on, the RM signal (Pr. 5) has a higher priority.

The RH, RM, RL signals are assigned to the terminal RH, RM, RL in the initial setting. By setting "0 (RL)", "1 (RM)", "2 (RH)" in any of Pr. 178 to Pr. 182 "Input terminal function assignment", you can assign the signals to other terminals.

For the terminal used for REX signal input, set "8" in any of Pr. 178 to Pr. 182 to assign the function.

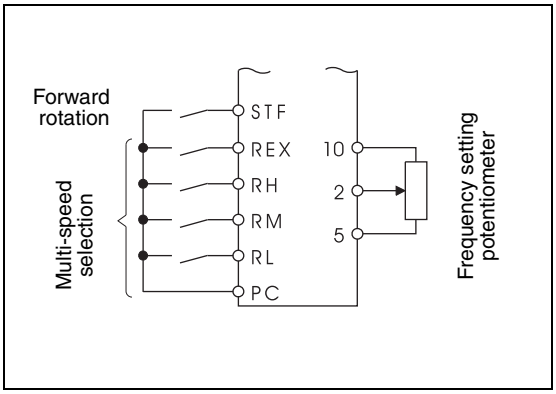

Fig. 6-17:
Connection example

NOTES

The priorities of the frequency commands by the external signals are "jog operation > multi-speed operation > terminal 4 analog input > terminal 2 analog input". (Refer to section 6.15 for the frequency command by analog input.)

Valid in external operation mode or PU/external combined operation mode (Pr. 79 = 3 or 4).

Multi-speed parameters can also be set in the PU or external operation mode.

Pr. 24 to Pr. 27 and Pr. 232 to Pr. 239 settings have no priority between them.

When a value other than "0" is set in Pr. 59 "Remote function selection", the RH, RM and RL signals are used as the remote setting signals and the multi-speed setting becomes invalid.

The RH, RM, RL, REX signals can be assigned to the input terminal using any of Pr. 178 to Pr. 182. When terminal assignment is changed, the other functions may be affected. Please make setting after confirming the function of each terminal.

6.5.2 Jog operation (Pr. 15, Pr. 16)

Jog operation is used to setup the machine.The frequency and acceleration/deceleration time for Jog operation can be set. As soon as the frequency inverter receives the start signal, the motor is accelerated at the frequency entered in parameter 15 (jog frequency) using the preset acceleration/brake time (parameter 16). Jog operation can be performed in either of the external and the PU operation mode.

Pr. No.	Name	Initial Value	Setting Range	Description
15	Jog frequency	5Hz	0–400Hz	Set the frequency for jog operation.
16	Jog acceleration/ deceleration time	0.5s	0–3600s	Acceleration/deceleration time for jog operation. This setting is related to to the reference frequency set in Pr. 20.

Parameters referred to		Refer to Section
13	Starting frequency	6.6.2
29	Acceleration/deceleration pattern selection	6.6.3
20	Acceleration/deceleration reference frequency	6.6.1
21	Acceleration/ deceleration time increments	6.6.1
79	Operation mode selection	6.17.1
178–182	Input terminal function selection	6.9.1

These parameters are displayed as simple mode parameter only when the parameter unit (FR-PU04/FR-PU07) is connected. When the parameter unit is not connected, the above parameters can be set when Pr. 160 = 0.

Jog operation from outside

When the jog signal is on, a start and stop can be made by the start signal (STF, STR). For the terminal used for Jog operation selection, set "5" in any of Pr. 178 to Pr. 182 to assign the function.

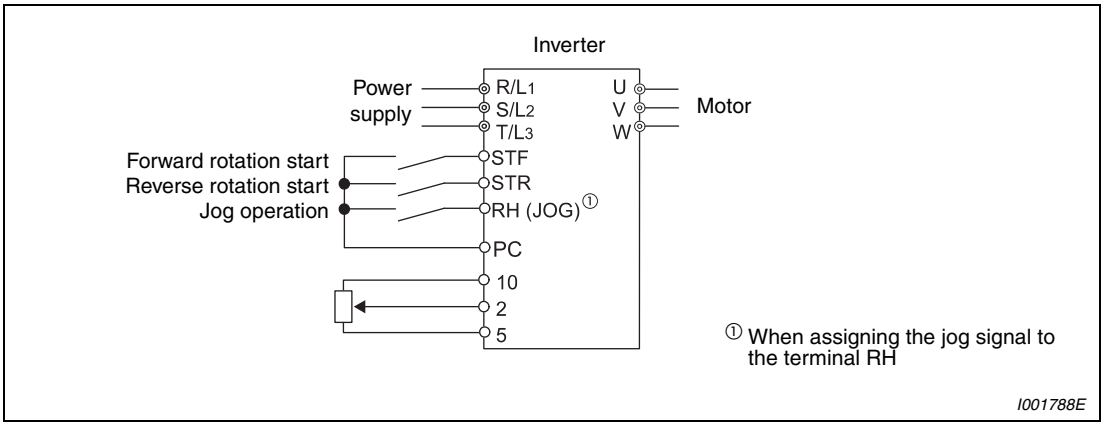

Fig. 6-18: *Connection diagram for external jog operation*

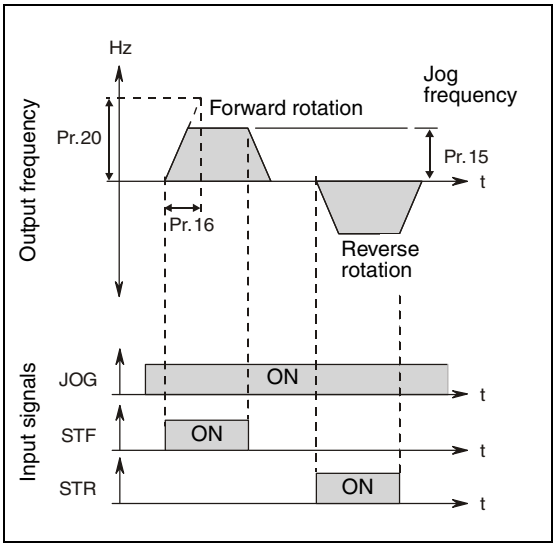

Fig. 6-19:
Jog operation signal timing chart

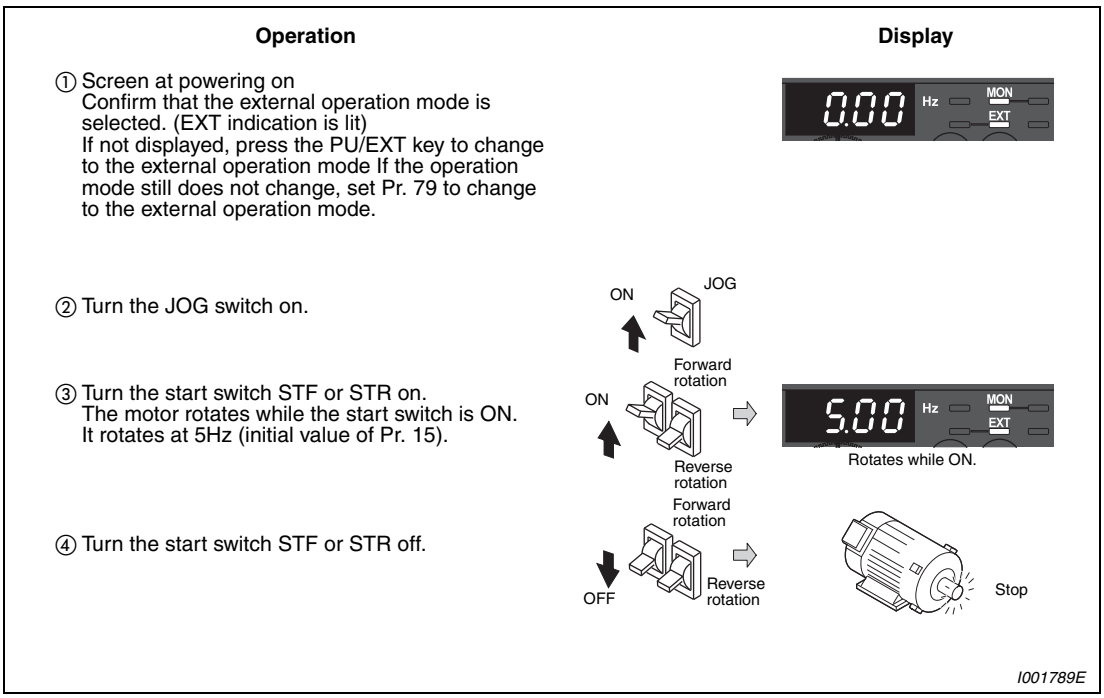

Fig. 6-20: *Jog operation in the external operation mode*

JOG operation from PU

Selects Jog operation mode from the operation panel and PU (FR-PU04/FR-PU07). Operation is performed only while the start button is pressed.

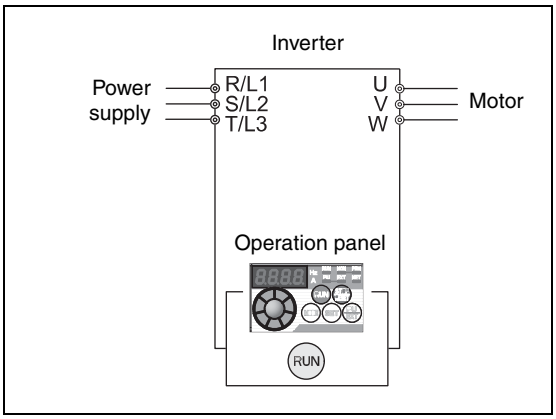

Fig. 6-21: *Connection example for jog operation performed from PU*

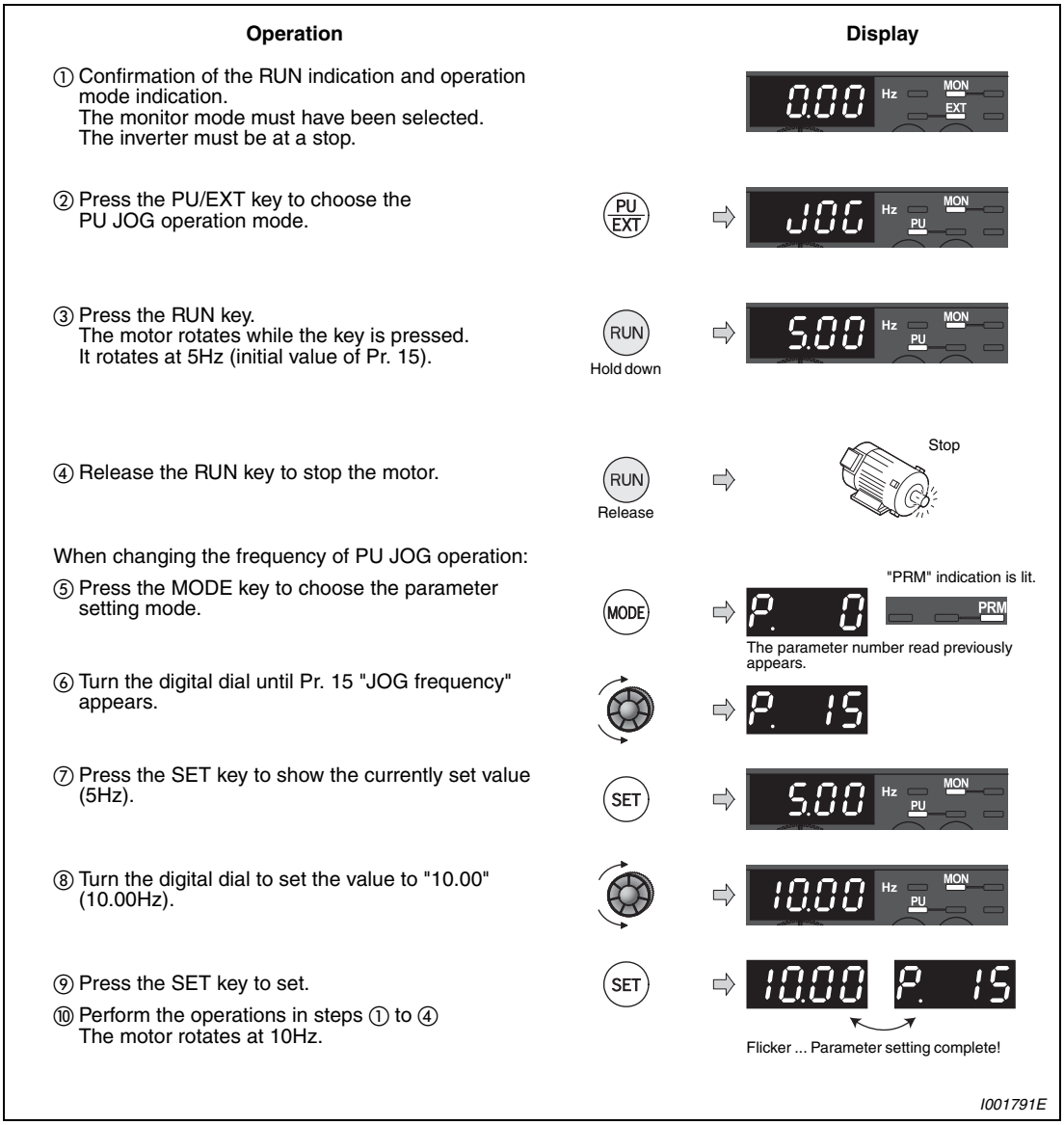

Fig. 6-22: *JOG operation performed from PU*

NOTES

When Pr. 29 "Acceleration/deceleration pattern selection" = "1" (S-pattern acceleration/deceleration A), the acceleration/deceleration time is the period of time required to reach Pr. 3 "Base frequency".

The Pr. 15 setting should be equal to or higher than the Pr. 13 "Starting frequency setting".

The JOG signal can be assigned to the input terminal using any of Pr. 178 to Pr. 182. When terminal assignment is changed, the other functions may be affected. Please make setting after confirming the function of each terminal.

During jog operation, the second acceleration/deceleration via the RT signal cannot be selected. (The other second functions are valid (refer to section 6.9.3)).

When Pr. 79 "Operation mode selection" = 4, push the RUN key of the operation panel or the FWD/REV key of the PU (FR-PU04/FR-PU07) to make a start or push the STOP/RESET key to make a stop.

This function is invalid when Pr. 79 = "3".

6.5.3 Remote setting function (Pr. 59)

Even if the operation panel is located away from the enclosure, you can use contact signals to perform continuous variable-speed operation, without using analog signals.

Pr. No.	Name	Initial Value	Setting Range	Description: RH, RM and RL signal function	Description: Frequency setting storage function
59	Remote function selection	0	0	Multi-speed setting	—
			1	Remote setting	✔
			2	Remote setting	—
			3	Remote setting	— (Turning STF/STR off clears remote setting frequency.)

Parameters referred to		Refer to Section
1	Maximum frequency	6.3.1
18	High speed maximum frequency	6.3.1
7	Acceleration time	6.6.1
8	Deceleration time	6.6.1
44	Second acceleration/deceleration time	6.6.1
45	Second deceleration time	6.6.1
178–182	Input terminal function selection	6.9.1

The above parameter can be set when Pr. 160 = 0.

Pr. 59 can be used to select a digital motor potentiometer. Setting Pr. 59 to a value of "1" activates the frequency setting storage function, so that the stored value is also stored when the power is switched off. The last frequency value is stored in the E²PROM. The delete instruction only applies to the data stored in RAM.

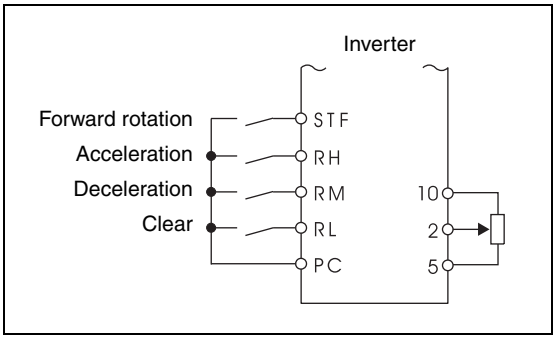

Fig. 6-23: *Connection diagram for remote setting*

When Pr. 59 is set to any of "1 to 3" (remote setting function valid), the functions of the RH, RM and RL signals are changed: RH ⇒ acceleration, RM ⇒ deceleration and RL ⇒ clear.

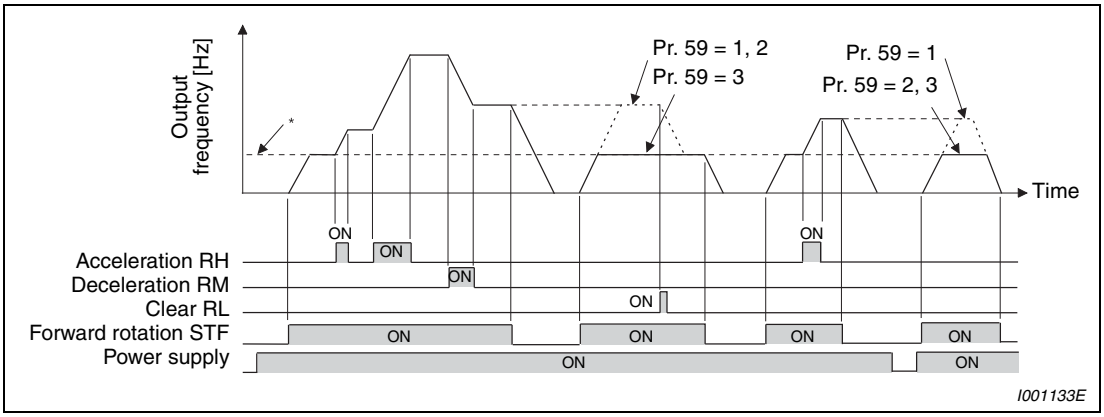

Fig. 6-24: *Example of the remote setting function*

* External operation frequency (other than multi-speed) or PU running frequency.

Remote setting function

When using the remote setting function, following frequencies can be compensated to the frequency set by RH and RM operation according to the operation mode.

During external operation (including Pr. 79 = 4):	external frequency command other than multi-speed settings
During external operation and PU combined operation (Pr. 79 = 3):	PU frequency command or terminal 4 input.
During PU operation:	PU frequency command

Frequency setting storage

The frequency setting storage function stores the remotely-set frequency (frequency set by RH/RM operation) into the memory (E^2PROM). When power is switched off once, then on, operation is resumed with that output frequency value (Pr. 59 = 1).

The frequency is stored at the point when the start signal (STF or STR) turns off or every one minute after one minute has elapsed since turn off (on) of both the RH (acceleration) and RM (deceleration) signals. (The frequency is written if the present frequency setting compared with the past frequency setting every one minute is different. The state of the RL signal does not affect writing.)

NOTES

The range of frequency changeable by RH (acceleration) and RM (deceleration) is 0 to maximum frequency (Pr. 1 or Pr. 18 setting). Note that the maximum value of set frequency is (main speed + maximum frequency).

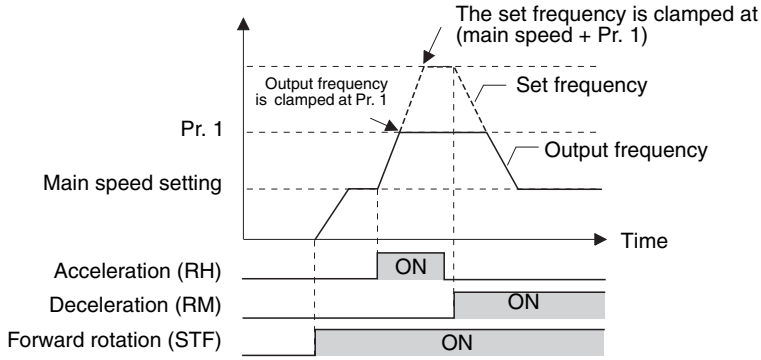

When the acceleration or deceleration signal switches ON, acceleration/deceleration time is as set in Pr. 44 and Pr. 45. Note that when the time set in Pr. 7 or Pr. 8 is longer than the time set in Pr. 44 or Pr. 45, the acceleration/deceleration time is as set in Pr. 7 or Pr. 8. (when RT signal is OFF). When the RT signal is ON, acceleration/deceleration is made in the time set in Pr. 44 and Pr. 45, regardless of the Pr. 7 or Pr. 8 setting.

If the start signal (STF or STR) is off, turning ON the acceleration (RH) or deceleration (RM) signal varies the preset frequency (when Pr. 59 = 1 or 2).

When switching the start signal from ON to OFF, or changing frequency by the RH or RM signal frequently, set the frequency setting value storage function (write to E^2PROM) invalid (Pr. 59 = 2 or 3). If set valid (Pr. 59 = 1), frequency is written to E^2PROM frequently, this will shorten the life of the E^2PROM.

The RH, RM, RL signals can be assigned to the input terminal using any Pr. 178 to Pr. 182. When terminal assignment is changed, the other functions may be affected. Please make setting after confirming the function of each terminal.

Also available for the network operation mode.

During jog operation or PID control operation, the remote setting function is invalid.

Set frequency = 0Hz

- Even when the remotely-set frequency is cleared by turning on the RL (clear) signal after turn off (on) of both the RH and RM signals, the inverter operates at the remotely-set frequency stored in the last operation if power is reapplied before one minute has elapsed since turn off (on) of both the RH and RM signals.

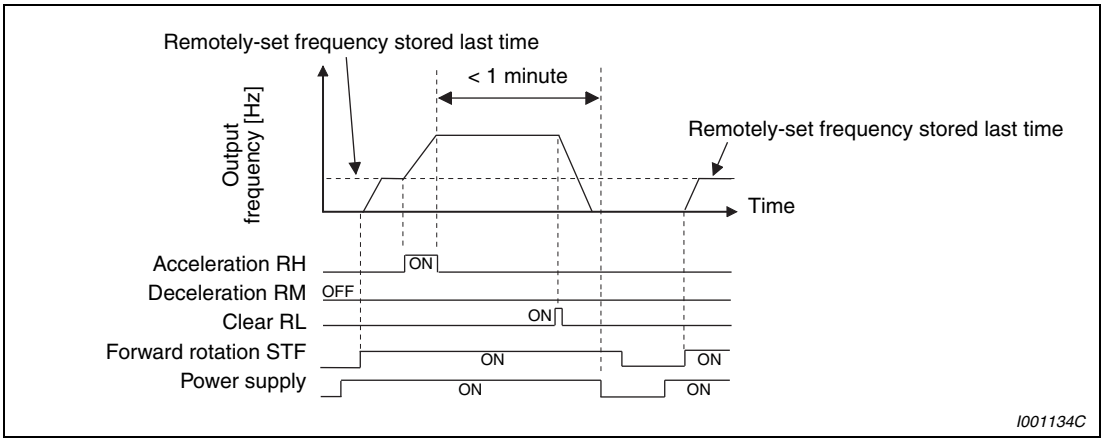

Fig. 6-25: *Outputting the remotely-set frequency stored last time*

- When the remotely-set frequency is cleared by turning on the RL (clear) signal after turn off (on) of both the RH and RM signals, the inverter operates at the frequency in the remotely-set frequency cleared state if power is reapplied after one minute has elapsed since turn off (on) of both the RH and RM signals.

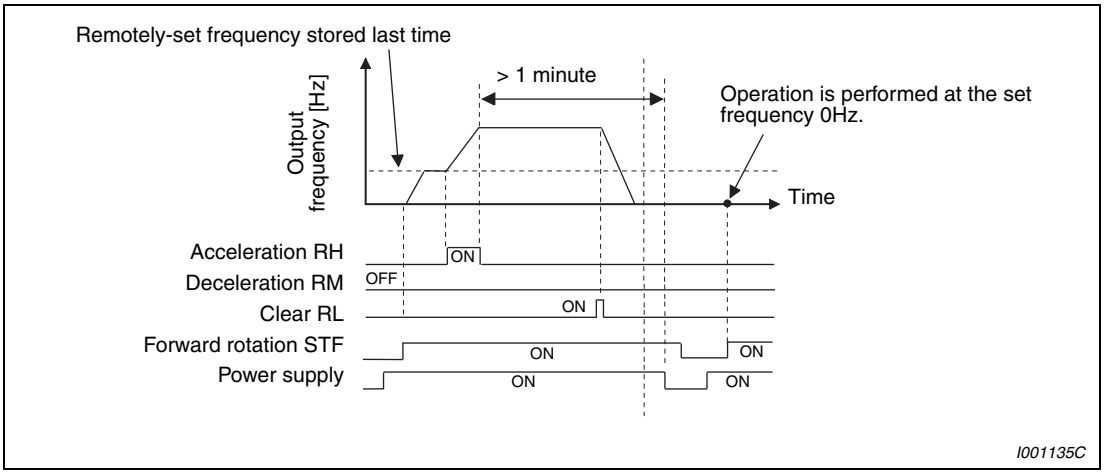

Fig. 6-26: *Outputting the current set frequency*

CAUTION:
When Pr. 59 is set to "1" the motor will restart automatically after a power failure if there is an active rotation direction signal.

6.6 Acceleration and deceleration

Purpose	Parameters that must be set		Refer to Section
Motor acceleration/deceleration time setting	Acceleration/deceleration times	Pr. 7, Pr. 8, Pr. 20, Pr. 44, Pr. 45	6.6.1
Starting frequency	Starting frequency and start-time hold	Pr. 13, Pr. 571	6.6.2
Set acceleration/deceleration pattern suitable for application	Acceleration/deceleration pattern	Pr. 29	6.6.3

6.6.1 Acceleration and deceleration time (Pr. 7, Pr. 8, Pr. 20, Pr. 44, Pr. 45)

Used to set motor acceleration/deceleration time. Set a larger value for a slower speed increase/decrease or a smaller value for a faster speed increase/decrease.

Pr. No.	Name	Initial Value		Setting Range	Description
7	Acceleration time	FR-D720S-008SC to 100SC, FR-D740-080SC or less	5s	0–3600s	Set the motor acceleration time.
		FR-D740-120SC and 160SC	10s		
8	Deceleration time	FR-D720S-008SC to 100SC, FR-D740-080SC or less	5s	0–3600s	Set the motor deceleration time.
		FR-D740-120SC and 160SC	10s		
20	Acceleration/deceleration reference frequency ①	50Hz		1–400Hz	Set the frequency that will be the basis of acceleration/deceleration time. As acceleration/deceleration time, set the frequency change time from stop to Pr. 20.
44	Second acceleration/deceleration time ①	FR-D720S-008SC to 100SC, FR-D740-080SC or less	5s	0–3600s	Set the acceleration/deceleration time when the RT signal is on.
		FR-D740-120SC and 160SC	10s		
45	Second deceleration time ①	9999		0–3600s	Set the deceleration time when the RT signal is on.
				9999	Acceleration time = deceleration time

Parameters referred to		Refer to Section
3	Base frequency	6.4.1
10	DC injection brake operation frequency	6.8.1
29	Acceleration/deceleration pattern selection	6.6.3
125	Frequency setting gain frequency	6.15.3
126	Frequency setting gain frequency	6.15.3
178–182	Input terminal function selection	6.9.1

① The above parameters can be set when Pr. 160 = 0.

Acceleration time setting (Pr. 7, Pr. 20)

Use Pr. 7 "Acceleration time" to set the acceleration time required to reach Pr. 20 "Acceleration/ deceleration reference frequency" from 0Hz.

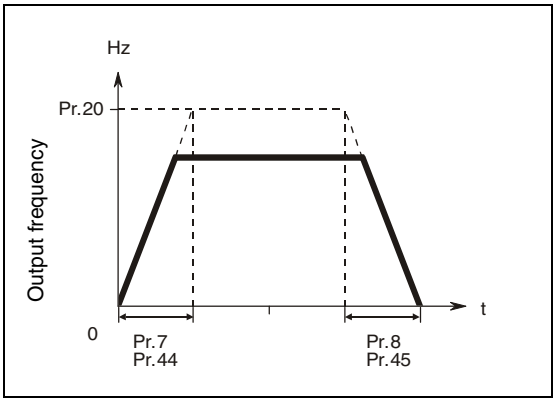

Fig. 6-27:
Acceleration/deceleration time

Set the acceleration time according to the following formula:

$$\text{Acceleration time setting} = \frac{\text{Pr. 20}}{\text{Maximum operating frequency} - \text{Pr. 13}} \times \text{Acceleration time from stop to maximum operating frequency}$$

Example ▽ When Pr. 20 = 50Hz (initial value), Pr. 13 = 0.5Hz

How to find the setting value for Pr. 7 when increasing the output frequency to the maximum frequency of 40Hz in 10s.

$$\text{Pr. 7} = \frac{50\text{Hz}}{40\text{Hz} - 0{,}5\text{Hz}} \times 10\text{s} = 12.7\text{s}$$

△

Deceleration time setting (Pr. 8, Pr. 20)

Use Pr. 8 "Deceleration time" to set the deceleration time required to reach 0Hz from Pr. 20 "Acceleration/deceleration reference frequency".

Set the deceleration time according to the following formula:

$$\text{Deceleration time setting} = \frac{\text{Pr. 20}}{\text{Maximum operating frequency} - \text{Pr. 10}} \times \text{Deceleration time from maximum operating frequency to stop}$$

Example ▽ When Pr. 20 = 120Hz, Pr. 10 = 3Hz

How to find the setting value for Pr.8 when decreasing the output frequency from the maximum frequency of 40Hz in 10s.

$$\text{Pr. 8} = \frac{120\text{Hz}}{40\text{Hz} - 3\text{Hz}} \times 10\text{s} = 32.4\text{s}$$

△

Set two kinds of acceleration/deceleration times (RT signal, Pr. 44, Pr. 45)

Pr. 44 and Pr. 45 are valid when the RT signal is on. Switching the parameter sets allows you to operate motors with different specifications and capabilities with the frequency inverter.

When "9999" is set to Pr. 45, the deceleration time becomes equal to the acceleration time (Pr. 44).

For the RT signal, set "3" in any of Pr. 178 to Pr. 182 "Input terminal function selection" to assign the function.

S-shaped acceleration/deceleration pattern

If a S-shaped acceleration/deceleration pattern A is selected in pr. 29, the set time is the period required to reach the base frequency set in Pr. 3 "Base frequency".

Acceleration/deceleration time formula when the set frequency is the base frequency or higher.

$$t = \frac{4}{9} \times \frac{T}{(\text{Pr. } 3)^2} \times f^2 + \frac{5}{9} T$$

T: Acceleration/deceleration time setting value (s)
f: Set frequency (Hz)

NOTE

You will find a detailed description of this parameter in section 6.6.3.

Guideline for acceleration/deceleration time when Pr. 3 Base frequency = 50Hz (0Hz to set frequency).

Acceleration/deceleration time [s]	Frequency Setting [Hz]			
	50	120	200	400
5	5	16	38	145
15	15	47	115	435

Tab. 6-4: *Acceleration/deceleration time at a base frequency of 50Hz*

NOTES

Changing terminal assignment may affect the other functions. Make setting after confirming the function of each terminal. (Refer to section 6.9.3.)

If the Pr. 20 setting is changed, the Pr. 125 and Pr. 126 (frequency setting signal gain frequency) settings do not change. Set Pr. 125 and Pr. 126 to adjust the gains.

When the Pr. 7, Pr. 8, Pr. 44 or Pr. 45 settings are 0.03s or less, the acceleration/deceleration time is 0.04s. At that time, set Pr. 20 to "120Hz" or less.

If the acceleration/deceleration time is set, the actual motor acceleration/deceleration time cannot be made shorter than the shortest acceleration/deceleration time determined by the mechanical system J (inertia moment) and motor torque.

6.6.2 Starting frequency and start-time hold function

You can set the starting frequency and hold the set starting frequency for a certain period of time. Set these functions when you need the starting torque or want to smooth motor drive at a start.

Pr. No.	Name	Initial Value	Setting Range	Description
13	Starting frequency	0.5Hz	0–60Hz	Frequency at start can be set in the range 0 to 60Hz. You can set the starting frequency at which the start signal is turned on.
571	Holding time at start	9999	0–10s	Set the holding time of Pr. 13 "Starting frequency".
			9999	Holding function at a start is invalid

Parameters referred to	Refer to Section
2 Minimum frequency	6.3.1

The above parameters can be set when Pr. 160 = 0.

Starting frequency setting (Pr. 13)

The motor is started with the specified start frequency as soon as the frequency inverter receives a start signal and a frequency setting that is greater than or equal to the preset starting frequency.

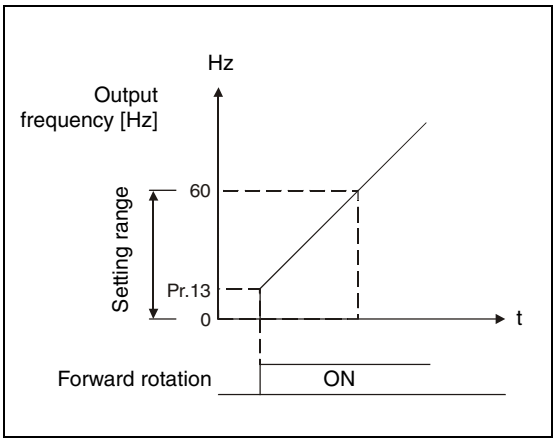

Fig. 6-28:
Starting frequency parameter

NOTE The inverter will not start if the frequency setting signal is less than the value set in Pr. 13.

Example ▽ When 5Hz is set in Pr. 13, the motor will not start running until the frequency setting signal reaches 5Hz.

△

WARNING:
Note that when Pr. 13 is set to any value lower than Pr. 2 "Minimum frequency", simply turning on the start signal will run the motor at the preset frequency even if the command frequency is not input.

Start-time hold function (Pr. 571)

This function holds the time set in Pr. 571 and the output frequency set in Pr. 13 "Starting frequency".
This function performs initial excitation to smooth the motor drive at a start.

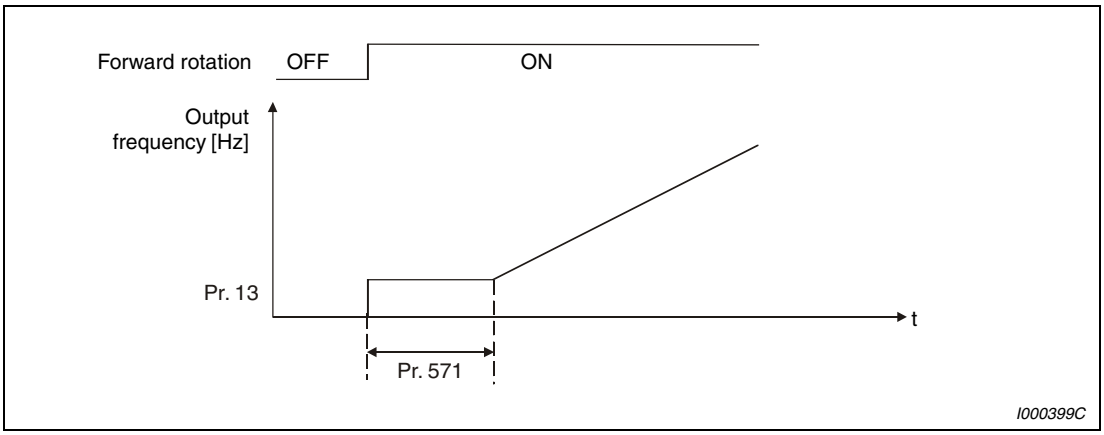

Fig. 6-29: *Holding time at start*

NOTES

When the start signal was turned off during start-time hold, deceleration is started at that point.

At switching between forward rotation and reverse rotation, the starting frequency is valid but the start-time hold function is invalid.

When Pr. 13 = 0Hz, the starting frequency is held at 0.01Hz.

6.6.3 Acceleration and deceleration pattern (Pr. 29)

You can set the acceleration/deceleration pattern suitable for application.

Pr. No.	Name	Initial Value	Setting Range	Description
29	Acceleration/deceleration pattern selection	0	0	Linear acceleration/deceleration
			1	S-pattern acceleration/deceleration A
			2	S-pattern acceleration/deceleration B

Parameters referred to		Refer to Section
3	Base frequency	6.4.1
7	Acceleration time	6.6.1
8	Deceleration time	6.6.1
20	Acceleration/ deceleration reference frequency	6.6.1

The above parameter can be set when Pr. 160 = 0.

Linear acceleration/deceleration (Pr. 29 = 0, initial value)

For the inverter operation, the output frequency is made to change linearly (linear acceleration/ deceleration) to prevent the motor and inverter from excessive stress to reach the set frequency during acceleration, deceleration, etc. when frequency changes. Linear acceleration/deceleration has a uniform frequency/time slope (refer to Fig. 6-30).

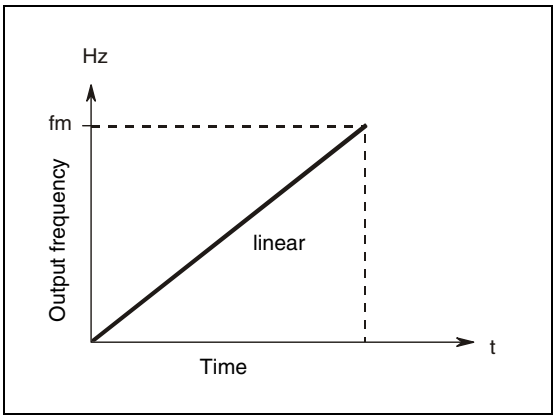

Fig. 6-30:
Characteristic for parameter 29 = 0

I000015C

S-pattern acceleration/deceleration A (Pr. 29 = 1)

Used when acceleration/deceleration must be made in a short time to a high-speed range of not lower than base frequency. In this acceleration/deceleration pattern, Pr. 3 "Base frequency" (fb) is the inflection point of the S-pattern (refer to Fig. 6-31) and you can set the acceleration/deceleration time appropriate for motor torque reduction in a constant-output operation region of base frequency or higher. For machine tool spindle applications, etc.

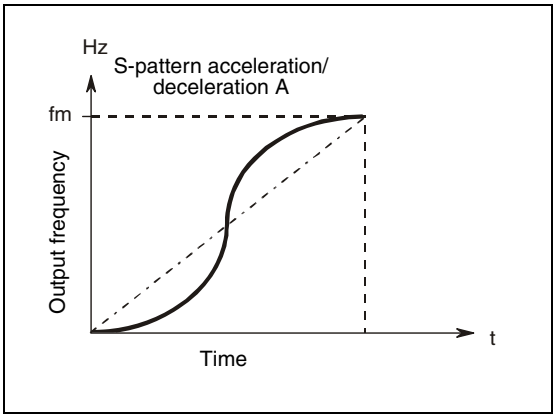

Fig. 6-31:
Characteristic for parameter 29 = 1

I000016C

S-pattern acceleration/deceleration B (Pr. 29 = 2)

When a setting of "2" is entered frequency changes are executed with an S-pattern. For example, if a drive is accelerated from 0 to 30Hz and then re-accelerated to 50Hz then each acceleration sequence (i.e. the first sequence from 0 to 30Hz and the second from 30Hz to 50Hz) will be executed with an S-pattern. The time for the S-pattern is not longer than that for linear acceleration (refer to Fig. 6-32). This prevents jolts in drive operation, for example for conveyor belt and positioning drive systems.

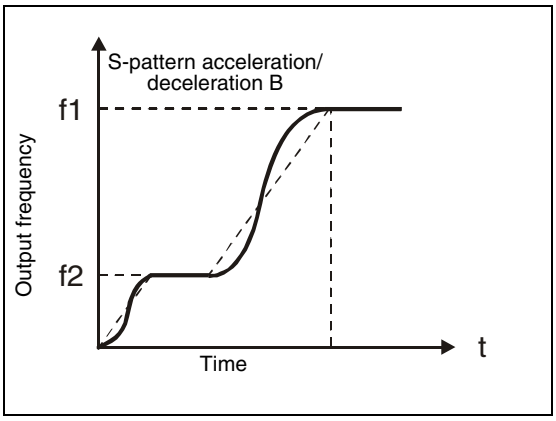

Fig. 6-32:
Characteristic for parameter 29 = 2

I000017C

NOTE

As the acceleration/deceleration time of S-pattern acceleration/deceleration A, set the time taken until Pr. 3 "Base frequency" is reached, not Pr. 20 "Acceleration/deceleration reference frequency".

6.7 Selection and protection of a motor

Purpose	Parameters that must be set		Refer to Section
Motor protection from overheat	Electronic thermal O/L relay/ PTC thermistor protection	Pr. 9, Pr. 51, Pr. 561	6.7.1
Constant torque motor	Applied motor	Pr. 71	
The motor performance can be maximized for operation in magnetic flux vector control method.	Offline auto tuning	Pr. 71, Pr. 80, Pr. 82–Pr. 84, Pr. 90, Pr. 96	6.7.3

6.7.1 Motor overheat protection (Electronic thermal O/L relay) (Pr. 9, Pr. 51, Pr. 561)

The FR-D700 SC EC frequency inverters have an internal electronic motor protection function that monitors the motor frequency and motor current. Overload conditions are identified and the motor protection function is triggered on the basis of these two factors, in combination with the rated motor current. The electronic motor protection function is primarily for protection against overheating at intermediate speeds and high motor torques. The reduced cooling performance of the motor fan under these conditions is also taken into account.

Pr. No.	Name	Initial Value	Setting Range	Description
9	Electronic thermal O/L relay	Rated inverter output current	0–500A	Set the rated motor current.
51	Second electronic thermal O/L relay ①②	9999	0–500A	Made valid when the RT signal is on. Set the rated motor current.
			9999	Second electronic thermal O/L relay invalid
561	PTC thermistor protection level ①	9999	0.5–30kΩ	Set the level (resistance value) for PTC thermistor protection activates.
			9999	PTC thermistor protection is inactive.

Parameters referred to		Refer to Section
71	Applied motor	6.7.2
72	PWM frequency selection	6.14.1
79	Operation mode selection	6.17.1
128	PID action selection	6.19.1
178–182	Input terminal function selection	6.9.1
190/ 192/197	Output terminal function selection	6.9.5

① The above parameters can be set when Pr. 160 = 0.

② When parameter is read using the FR-PU04, a parameter name different from an actual parameter is displayed.

Electronic thermal O/L relay (Pr. 9)

Set the rated current [A] of the motor in Pr. 9. (When the power supply specification is 400V/ 440V 60Hz, set the 1.1 times the rated motor current.)

Set "0" to Pr. 9 when you do not want to activate the electronic thermal relay function, e.g. when using an external thermal relay with the motor. (Note that the output transistor protection of the inverter functions (E.THT).)

When using the Mitsubishi constant-torque motor set "1, 13, 50 or 53" to Pr. 71. This provides a 100% continuous torque characteristic in the low-speed range. After this set the rated current of the motor to Pr. 9.

The figure below shows the electronic thermal relay function operation characteristic. The region on the right of the characteristic curve is the operation region. The region on the left of the characteristic curve is the non-operation region.

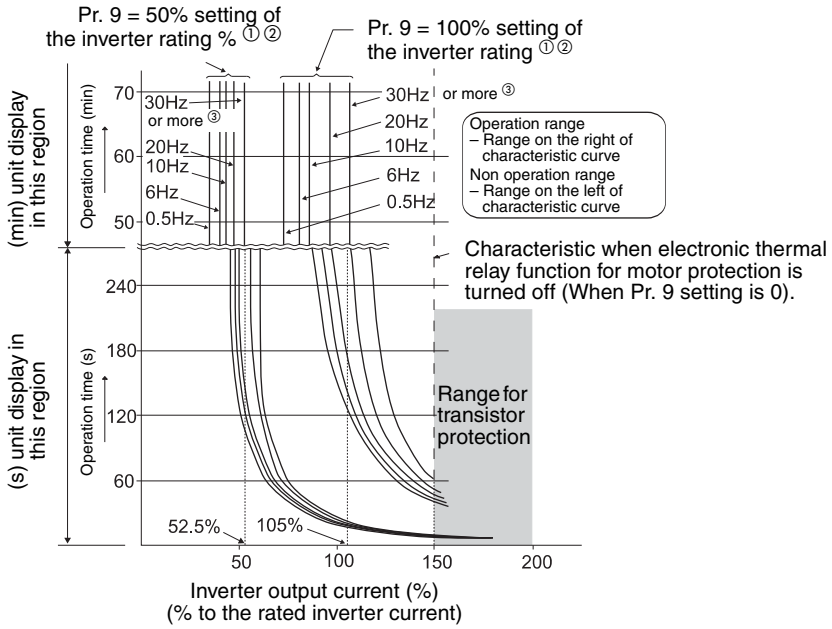

Fig. 6-33: *Electronic thermal relay function operation characteristic*

① When a value 50% of the inverter rated output current (current value) is set to Pr. 9.

② The % value denotes the percentage to the inverter rated output current. It is not the percentage to the motor rated current.

③ When you set the electronic thermal relay function dedicated to the Mitsubishi constant-torque motor, this characteristic curve applies to operation at 6Hz or higher.

NOTES

Fault by electronic thermal relay function is reset by inverter power reset and reset signal input. Avoid unnecessary reset and power-off.

Install an external thermal relay (OCR) between the inverter and a motor when operating several motors by one inverter, or when using a multi-pole motor or specialized motor. In this case, set 0A to the electronic thermal O/L relay setting of the inverter. For the external thermal relay, determine the setting value in consideration of the current indicated on the motor's rating plate and the line-to-line leakage current. Self-cooling ability of a motor is reduced at low speed operation. Use a motor with a built-in thermal protector.

When the difference between the inverter and motor capacities is large and the setting is small, the protective characteristics of the electronic thermal relay function will be deteriorated. Thermal motor protection must be ensured by external motor protection (e.g. PTC element, motor protection switch, etc.).

The operation time of the transistor protection thermal relay shortens when the Pr. 72 "PWM frequency selection" setting increases.

Set two different electronic thermal O/L relays (Pr. 51)

Use this function when running two motors of different rated currents individually by a single inverter. (When running two motors together, use external thermal relays.)

Set the rated current of the second motor to Pr. 51. When the RT signal is on, thermal protection is provided based on the Pr. 51 setting.

For the terminal used for RT signal input, set "3" in any of Pr. 178 to Pr. 182 to assign the function.

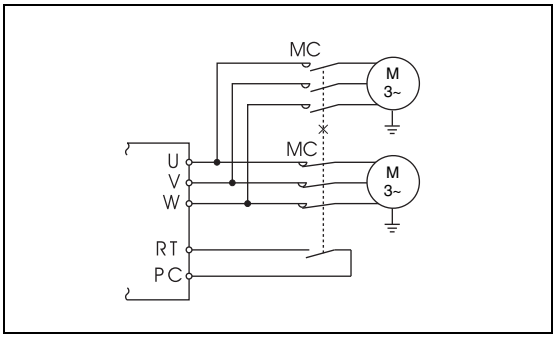

Fig. 6-34:
Running two motors by a single inverter

I001137C

Pr. 450 Second applied motor	Pr. 9 Electronic thermal O/L relay	Pr. 51 Second electronic thermal O/L relay	RT = OFF		RT = ON	
			1. Motor	2. Motor	1. Motor	2. Motor
9999	0	9999	—	—	—	—
		0	—	—	—	—
		0.01–500	—	△	—	●
9999	≠ 0	9999	●	—	●	—
		0	●	—	△	—
		0.01–500	●	△	△	●
≠ 9999	0	9999	—	—	—	—
		0	—	—	—	—
		0.01–500	—	△	—	●
≠ 9999	≠ 0	9999	●	△	△	●
		0	●	—	△	—
		0.01–500 (0.1–3600)	●	△	△	●

Tab. 6-5: *Switching the electronic thermal O/L relay*

● Output current value is used to perform integration processing.

△ Output current is assumed as 0A to perform integration processing. (cooling processing)

— Electronic thermal relay function is not activated.

NOTE

The RT signal acts as the second function selection signal and makes the other second functions valid. (Refer to section 6.9.3.)

Electronic thermal relay function prealarm (TH) and alarm signal (THP signal)

The alarm signal (THP) is output and electronic thermal relay function prealarm (TH) is displayed when the electronic thermal O/L relay cumulative value reaches 85% of the level set in Pr. 9 or Pr. 51. If it reaches 100% of the Pr. 9 "Electronic thermal O/L relay setting", a motor overload trip (E.THM) occurs.

NOTE

The prealarm signal "THP" is also issued as soon as the thermal load of the IGBT output stages of the frequency inverter is 85%. If the load rises further up to 100%, then the thermal overload protection of the frequency inverter responds and the "E.THT" error message is shown.

The frequency inverter output is not switched off if the prealarm signal is triggered. For the terminal used for the THP signal output, assign the function by setting "8 (positive logic) or 108 (negative logic)" in any of Pr. 190, Pr. 192 or Pr. 197.

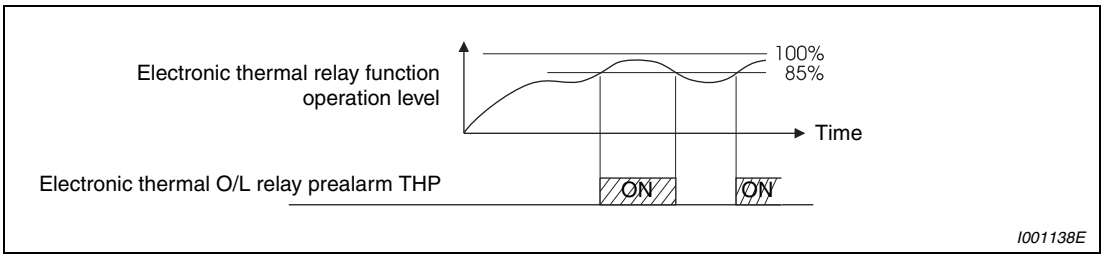

Fig. 6-35: *Prealarm signal output*

NOTE

Changing the terminal assignment using Pr. 190, Pr. 192 or Pr. 197 may affect the other functions. Make setting after confirming the function of each terminal.

External thermal relay input (OH signal)

To protect the motor against overheat, use the OH signal (refer to Fig. 6-36) when using an external thermal relay or the built-in thermal protector of the motor.

When the thermal relay operates, the inverter trips and outputs the fault signal (E.OHT).

For the terminal used for OH signal input, assign the function by setting "7" to any of Pr. 178 to Pr. 182 "Input terminal function selection".

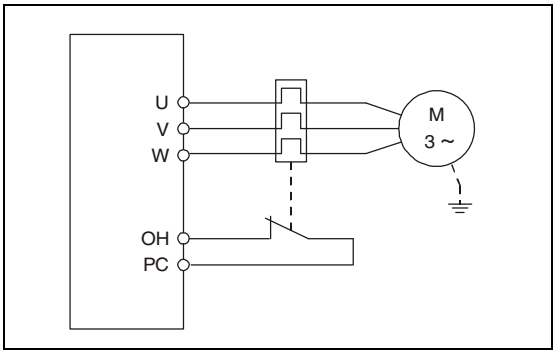

Fig. 6-36:
Connection of an external thermal relay

NOTE

Changing the terminal assignment using Pr. 178 to Pr. 182 may affect the other functions. Make setting after confirming the function of each terminal.

PTC thermistor protection (Pr. 561)

Terminal 2 and terminal 10 are available for inputting of motor built-in PTC thermistor output. When the PTC thermistor input reaches to the resistance value set in Pr. 561, inverter outputs PTC thermistor operation error signal (E.PTC) and trips.

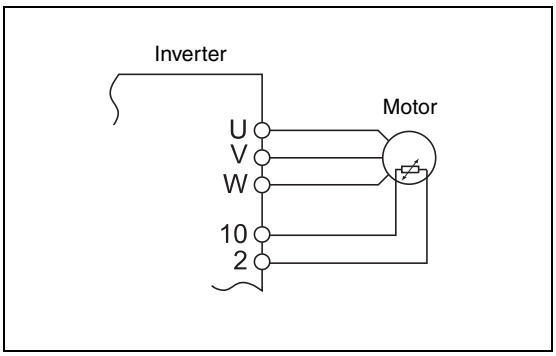

Fig. 6-37:
PTC thermistor input connection

Check the characteristics of the using PTC thermistor, and set the resistance value within a protection providing temperature TN, just around the center of R1 and R2 in a left figure. If the Pr. 561 setting is closer to R1 or R2, the working temperature of protection goes higher (protection works later), or lower (protection works earlier).

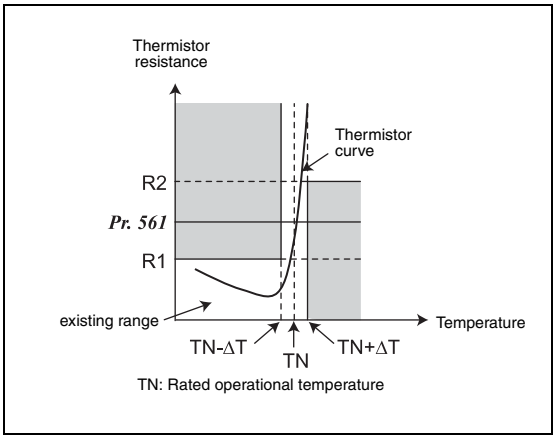

Fig. 6-38:
PTC thermistor characteristics

PTC thermistor resistance can be displayed in operation panel, parameter unit (FR-PU07) (refer to section 6.10.2) or RS485 communication (refer to section 6.18), when PTC thermistor protection is active (Pr. 561 ≠ 9999).

NOTES

When using terminal 2 as PTC thermistor input (Pr. 561 ≠ 9999), terminal 2 is not available for analog frequency command. Also unavailable when using terminal 2 for PID control and Dancer control. When PID control and Dancer control is not active (Pr. 128 = "0"), terminal 4 functions as follows:

When Pr. 79 = "4" or in External operation mode:	Terminal 4 is active whether AU signal is ON/OFF
When Pr. 79 = "3":	Terminal 4 is active for frequency command when AU signal is ON

For the power supply terminal of PTC thermistor input, do not use power supply other than terminal 10 (external power supply, etc). PTC thermistor does not work properly.

6.7.2 Applied motor (Pr. 71, Pr. 450)

Setting of the used motor selects the thermal characteristic appropriate for the motor. Setting is required to use a constant-torque motor. Thermal characteristic of the electronic thermal relay function suitable for the motor is set.

When general-purpose magnetic flux vector is selected, the motor constants (SF-JR, SF-HR, SF-JRCA, SF-HRCA, etc.) necessary for control are selected as well.

Pr. No.	Name	Initial Value	Setting Range	Description
71	Applied motor	0	0/1/3/13/23/40/43/50/53	Selecting the standard motor or constant-torque motor sets the corresponding motor thermal characteristic.
450	Second applied motor	9999	0/1	Set when using the second motor.
			9999	Second motor is invalid (thermal characteristic of the first motor (Pr. 71))

Parameters referred to		Refer to Section
0	Torque boost	6.2.1
12	DC injection brake operation voltage	6.8.1
80	Motor capacity	6.7.3

The above parameters can be set when Pr. 160 = 0.

Set the motor to be used

Refer to the following list and set this parameter according to the motor used.

Pr. 71	Pr. 450	Thermal Characteristic of the Electronic Thermal Relay Function		Motor: Standard (SF-JR, etc.)	Motor: Constant Torque (SF-JRCA, etc.)
0 (initial value)		Thermal characteristics of a standard motor		✔	—
1		Thermal characteristics of the Mitsubishi constant-torque motor			✔
40	—	Thermal characteristic of Mitsubishi high efficiency motor (SF-HR)		✔ ①	
50	—	Thermal characteristic of Mitsubishi constant torque motor (SF-HRCA)			✔ ②
3	—	Standard motor	Select "Offline auto tuning setting"	✔	
13	—	Constant-torque motor			✔
23	—	Mitsubishi standard motor (SF-JR 4P 1.5kW or less)		✔	
43	—	Mitsubishi high efficiency motor (SF-HR)		✔ ①	
53	—	Mitsubishi constant-torque motor (SF-HRCA)			✔ ②
—	9999 (initial value)	Without second applied motor			

Tab. 6-6: *Setting of parameter Pr. 71 and Pr. 450*

① Motor constants of Mitsubishi high efficiency motor SF-HR.

② Motor constants of Mitsubishi constant-torque motor SF-HRCA.

NOTE

For the FR-D740-120SC and 160SC, the Pr. 0 "Torque boost" and Pr. 12 "DC injection brake operation voltage" settings are automatically changed according to the Pr. 71 setting as follows.

Pr. 71	0, 3, 23, 40, 43	1, 13, 50, 53
Pr. 0	3%	2%
Pr. 12	4%	2%

Tab. 6-7: *Changes of parameter 0 and 12 related to parameter 71*

CAUTION:

Set the electronic thermal relay function to the thermal characteristic for the constant-torque motor when using a geared motor (GM-S, GM-D, GM-SY, GM-HY2 series) to perform General-purpose magnetic-flux vector control.

Use two motors (Pr. 450)

- Set Pr. 450 "Second applied motor" to use two different motors with one inverter.
- When "9999" (initial value) is set, no function is selected.
- When a value other than "9999" is set in Pr. 450, the second motor is valid when the RT signal turns on.
- For the RT signal, set "3" in any of Pr. 178 to Pr. 182 to assign the function.

NOTES

The RT signal acts as the second function selection signal and makes the other second functions valid. (Refer to section 6.9.3.)

Changing the terminal assignment using Pr. 178 to Pr. 182 may affect other functions. Make setting after confirming the function of each terminal.

CAUTION:

Set this parameter correctly according to the motor used. Incorrect setting may cause the motor to overheat and burn.

6.7.3 To exhibit the best performance of the motor performance (offline auto tuning) (Pr. 71, Pr. 80, Pr. 82 to Pr. 84, Pr. 90, Pr. 96)

The motor performance can be maximized with offline auto tuning.

What is offline auto tuning?

- When performing general-purpose magnetic flux vector control, the motor can be run with the optimum operating characteristics by automatically measuring the motor constants (offline autotuning) even when each motor constants differs, other manufacturer's motor is used, or the wiring length is long.

Pr. No.	Name	Initial Value		Setting Range	Description
71	Applied motor	0		0/1/3/13/23/40/43/50/53	By selecting a standard motor or constant-torque motor, thermal characteristic and motor constants of each motor are set.
80	Motor capacity	9999		0.1–7.5kW	Applied motor capacity.
				9999	V/f control
82	Motor excitation current	9999		0–500A	Set motor excitation current (no load current).
				9999	Uses the Mitsubishi motor (SF-JR, SF-HR, SF-JRCA, SF-HRCA) constants.
83	Rated motor voltage	200V class	200V	0–1000 V	Set the rated motor voltage (V).
		400V class	400V		
84	Rated motor frequency	50Hz		10–120Hz	Set the rated motor frequency (Hz).
90	Motor constant (R1)	9999		0–50Ω/9999	Tuning data (The value measured by offline auto tuning is automatically set.) 9999: Uses the Mitsubishi motor (SF-JR, SF-HR, SF-JRCA, SF-HRCA) constants.
96	Auto tuning setting/ status	0		0	Offline auto tuning is not performed
				11	For general-purpose magnetic flux vector control Offline auto tuning is performed without motor running. (motor constant (R1) only)
				21	Offline auto tuning for V/f control (automatic restart after instantaneous power failure (with frequency search))

Parameters referred to		Refer to Section
9	Electronic thermal O/L relay	6.7.1
71	Applied motor	6.7.2
80	Motor capacity	6.2.2
156	Stall prevention operation selection	6.2.4
178–182	Input terminal function selection	6.9.1
190/192/197	Output terminal function selection	6.9.5

The above parameters can be set when Pr. 160 = 0.

- This function is valid only when a value other than "9999" is set in Pr. 80 and General-purpose magnetic flux vector control is selected.
- You can copy the offline auto tuning data (motor constants) to another inverter with the PU (FR-PU07).
- Even when motors (other manufacturer's motor, SF-JRC, etc.) other than Mitsubishi standard motor, high efficiency motor (SF-JR, SF-HR 0.2kW or more), and Mitsubishi constant-torque motor (SF-JRCA (four-pole), SF-HRCA 0.2kW to 7.5kW) are used or the wiring length is long (30m or longer as a reference), using the offline auto tuning function runs the motor with the optimum operating characteristics.
- Tuning is enabled even when a load is connected to the motor.

CAUTION:
As the motor may run slightly, fix the motor securely with a mechanical brake or make sure that there will be no problem in safety if the motor runs (caution is required especially in elevator). Note that tuning performance is unaffected even if the motor runs slightly.

- Reading/writing/copy of motor constants tuned by offline auto tuning (Pr. 90) are enabled.
- The offline auto tuning status can be monitored with the operation panel and PU (FR-PU04/FR-PU07).
- Do not connect a surge voltage suppression filter (FFR-DT or FFR-SI) between the inverter and motor.

Before performing offline auto tuning

Check the following before performing offline auto tuning.

- Make sure general-purpose magnetic flux vector control (Pr. 80) is selected. (Tuning can be performed even under V/f control selected by turning on X18.)
- A motor should be connected. Note that the motor should be at a stop at a tuning start.
- The motor capacity should be equal to or one rank lower than the inverter capacity. (Capacity should be 0.1kW or more.)
- A high-slip motor, high-speed motor and special motor cannot be tuned. (The maximum frequency is 120Hz.)

CAUTION:

As the motor may run slightly, fix the motor securely with a mechanical brake or make sure that there will be no problem in safety if the motor runs (caution is required especially in elevator). Note that tuning performance is unaffected even if the motor runs slightly.

- Offline auto tuning will not be performed properly if it is performed with a surge voltage suppression filter (FFR-DT or FFR-SI) connected between the inverter and motor. Remove it before starting tuning.

Setting

- Select general-purpose magnetic flux vector control (refer to section 6.2.2).
- Set "11" in Pr. 96 "Auto tuning setting/status" for tuning the motor constant R1 without running the motor. It takes approximately 9s until tuning is completed.
- Set the rated motor current (initial value is rated inverter current) in Pr. 9 "Electronic thermal O/L relay". (Refer to section 6.7.)
- Set the rated voltage of motor (initial value is 400V) in Pr. 83 "Motor rated voltage" and rated motor frequency (initial value is 50Hz) in Pr. 84 "Rated motor frequency".
- Set Pr. 71 "Applied motor" according to the motor used.

Motor		Pr. 71 ①
Mitsubishi standard motor Mitsubishi high efficiency motor	SF-JR	3
	SF-JR 4P-1.5 kW or less	23
	SF-HR	43
	Others	3
Mitsubishi constant-torque motor	SF-JRCA 4P	13
	SF-HRCA	53
	Others (SF-JRC, etc.)	13
Other manufacturer's standard motor	—	3
Other manufacturer's constant-torque motor	—	13

Tab. 6-8: *Motor selection*

① Refer to section for other settings of Pr. 71.

Execution of tuning

CAUTION:

Before performing tuning, check the monitor display of the operation panel or parameter unit (FR-PU04/FR-PU07) if the inverter is in the status for tuning (refer to Tab. 6-9). When the start command is turned on under V/f control, the motor starts.

When performing tuning or PU operation, press the RUN key of the operation panel or the FWD or REV key of the parameter unit (FR-PU04/FR-PU07).

For external operation, turn on the run command (STF signal or STR signal). Tuning starts. (Excitation noise is produced during tuning.)

NOTES

To force tuning to end, use the MRS or RES signal or press the STOP/RESET key of the operation panel. (Turning the start signal (STF signal or STR signal) off also ends tuning.)

During offline auto tuning, only the following I/O signals are valid: (initial value)
– Input terminal:
  STF, STR
– Output terminal:
  RUN, SO, AM, A, B, C
Note that the progress status of offline auto tuning is output in eight steps from AM when speed and output frequency are selected.

Since the RUN signal turns on when tuning is started, caution is required especially when a sequence which releases a mechanical brake by the RUN signal has been designed.

When executing offline auto tuning, input the run command after switching on the main circuit power (R/L1, S/L2, T/L3) of the inverter.

Do not perform ON/OFF switching of the second function selection signal (RT) during execution of offline autotuning. Auto tuning is not excecuted properly.

Do not connect a surge voltage suppression filter (FFR-DT or FFR-SI) between the inverter and motor.

Display during tuning

Monitor is displayed on the operation panel and parameter unit (FR-PU04/FR-PU07) during tuning as below. The value displayed corresponds to the value of parameter 96.

	Parameter Unit (FR-PU04/FR-PU07) Display	Operation Panel Indication
Pr. 96	11	11
Setting	READ:List 11 - - - STOP PU	
Tuning in progress	TUNE 12 STF FWD PU	
Normal end	TUNE 13 COMPETION STF STOP PU	Flickering
Error end (when inverter protective function operation is activated)	TUNE ERROR 9 STF STOP PU	

Tab. 6-9: *Display during tuning (monitor display)*

NOTE

Die Selbsteinstellung dauert etwa 9 s.

The set frequency monitor displayed during the offline auto tuning is 0Hz.

Return to normal operation

When offline auto tuning ends, press the STOP/RESET key of the operation panel during PU operation. For external operation, turn off the start signal (STF signal or STR signal) once. This operation resets the offline auto tuning and the PU's monitor display returns to the normal indication. (Without this operation, next operation cannot be started.)

If offline auto tuning ended in error (see the table below), motor constants are not set. Perform an inverter reset and restart tuning.

Pr. 96 Setting	Error Cause	Remedy
8	Forced end	Set "11" in Pr. 96 and perform tuning again.
9	Inverter protective function operation	Make setting again.
91	Current limit (stall prevention) function was activated.	Set "1" in Pr. 156.
92	Converter output voltage reached 75% of rated value.	Check for fluctuation of power supply voltage.
93	– Calculation error – A motor is not connected.	Check the motor wiring and make setting again. Set the rated current of the motor in Pr. 9.

Tab. 6-10: *Parameter 96 setting*

When tuning is ended forcibly by pressing the STOP/RESET key or turning off the start signal (STF or STR) during tuning, offline autotuning does not end normally. (The motor constants have not been set.) Perform an inverter reset and restart tuning.

When using the motor corresponding to the following specifications and conditions, reset Pr. 9 "Electronic thermal O/L relay" as below after tuning is completed.

- When the rated power specifications of the motor is 200/220V (400/440V) 60Hz, set 1.1 times rated motor current value in Pr. 9.
- When performing motor protection from overheat using a PTC thermistor or motor with temperature detector such as Klixon, set "0" (motor overheat protection by the inverter is invalid) in Pr. 9.

When you know motor excitation current (no load current), set the value in Pr. 82.

NOTES

The motor constants measured once in the offline auto tuning are stored as parameters and their data are held until the offline auto tuning is performed again.

An instantaneous power failure occurring during tuning will result in a tuning error. After power is restored, the inverter goes into the normal operation mode. Therefore, when STF (STR) signal is on, the motor runs in the forward (reverse) rotation.

Any alarm occurring during tuning is handled as in the ordinary mode. Note that if a fault retry has been set, retry is ignored.

CAUTION:
As the motor may run slightly during offline auto tuning, fix the motor securely with a mechanical brake or make sure that there will be no problem in safety if the motor runs (caution is required especially in elevator). Note that tuning performance is unaffected even if the motor runs slightly.

6.8 Motor brake and stop operation

Purpose	Parameters that must be set		Refer to Section
Motor braking torque adjustment	DC injection brake	Pr. 10–Pr. 12	6.8.1
Improve the motor braking torque with an option	Selection of a regenerative brake	Pr. 30, Pr. 70	6.8.2
Coast the motor to a stop	Selection of motor stopping method	Pr. 250	6.8.3

6.8.1 DC injection brake (Pr. 10 to Pr. 12)

The FR-D700 SC EC frequency inverter has an adjustable DC brake function.

This function uses the eddy current brake principle, stopping the motor by applying a pulsed DC voltage to the motor stator.

The pulsed DC voltage applied to the motor stator can achieve stopping torques of around 25 to 30% of the motor's rated torque.

Pr. No.	Name	Initial Value		Setting Range	Description
10	DC injection brake operation frequency	3Hz		0–120Hz	Set the operation frequency of the DC injection brake.
11	DC injection brake operation time	0.5s		0	DC injection brake disabled
				0.1–10s	Set the operation time of the DC injection brake.
12	DC injection brake operation voltage	FR-D720S-008SC and 014SC	6%	0–30%	Set the DC injection brake voltage (torque). When "0" is set, DC injection brake is disabled.
		FR-D720S-025SC or more, FR-D740-012SC to 160SC	4%		

Parameters referred to		Refer to Section
13	Starting frequency	6.6.2
71	Applied motor	6.7.2

The above parameters can be set when Pr. 160 = 0.

Operation frequency setting (Pr. 10)

When the frequency at which the DC injection brake operates is set to Pr. 10, the DC injection brake is operated when this frequency is reached during deceleration.

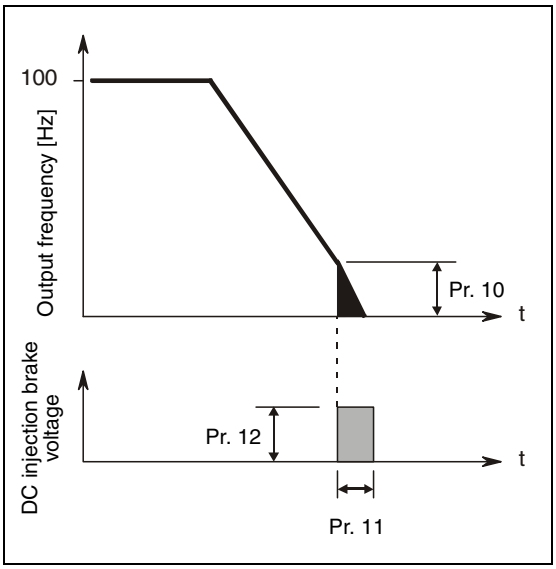

Fig. 6-39:
When Pr. 11 is set to a value between 0.1 and 10s

Operation time setting (Pr. 11)

Use Pr. 11 to set the duration period the DC injection brake is applied.

When the motor does not stop due to large load moment (J), increasing the setting produces an effect.

When Pr. 11 = 0s, the DC injection brake is not operated. (At a stop, the motor coasts.)

Operation voltage (torque) setting (Pr. 12)

Use Pr. 12 to set the percentage to the power supply voltage.

When Pr. 12 = 0%, the DC injection brake is not operated. (At a stop, the motor coasts.)

When using the constant-torque motor (SF-JRCA) and energy saving motor (SF-HR, SF-HRCA), change the Pr.12 setting as follows:

Constant-torque motor SF-JRCA:
FR-D720S-100SC or less, FR-D740-080SC or less 4%
FR-D740-120SC or more 2%

Energy saving motor SF-HR, SF-HRCA:
FR-D720S-100SC or less, FR-D740-080SC or less 4%
FR-D740-120SC or more 3%

NOTES

For the FR-D740-120SC and 160SC, when the Pr. 12 setting is the following, changing the Pr. 71 "Applied motor" setting automatically changes the Pr. 12 setting. Therefore, it is not necessary to change the Pr. 12 setting.

Parameter 12 = 4% (initial value)
The Pr. 12 setting is automatically changed to 2% if the Pr. 71 value is changed from the value selecting the standard motor (0, 3, 23, 40, 43) to the value selecting the constant torque motor (1, 13, 50, 53).

Parameter 12 = 2%
The Pr. 12 setting is automatically changed to 4% (initial value) if the Pr. 71 value is changed from the value selecting the constant torque motor (1, 13, 50, 53) to the value selecting the standard motor (0, 3, 23, 40, 43).

Even if the Pr. 12 setting is increased, braking torque is limited so that the output current is within the rated inverter current.

As stop holding torque is not produced, install a mechanical brake.

6.8.2 Selection of a regenerative brake (Pr. 30, Pr. 70)

- When making frequent starts/stops, use the optional high-duty brake resistor (FR-ABR) and brake unit (FR-BU2) to increase the regenerative brake duty.
- Use a power regeneration common converter (FR-CV) for continuous operation in regeneration status.
  Use the high power factor converter (FR-HC) to reduce harmonics, improve the power factor, or continuously use the regenerative status.

Pr. No.	Name	Initial Value	Setting Range	Description
30	Regenerative function selection	0	0	Brake unit (FR-BU2) Power regeneration common converter (FR-CV) High power factor converter (FR-HC)
			1	High-duty brake resistor (FR-ABR)
			2	High power factor converter (FR-HC) when automatic restart after instantaneous power failure is selected
70	Special regenerative brake duty	0%	0–30%	Brake duty when using the high-duty brake resistor (FR-ABR)

Parameters referred to		Refer to Section
57	Restart coasting time	6.11.1
178–182	Input terminal function selection	6.9.1
190/192/197	Output terminal function selection	6.9.5

The above parameters can be set when Pr. 160 = 0.

When using the brake unit (FR-BU2), power regeneration common converter (FR-CV), and high power factor converter (FR-HC).

- Set Pr. 30 to "0" (initial value). The Pr. 70 setting is made invalid. At this time, the regenerative brake duty is as follows.
  FR-D720S-025SC to 100SC ...3%
  FR-D740-012SC or more 2%
- Assign the inverter operation enable signal (X10) to the contact input terminal.
  To make protective coordination with the FR-HC and FR-CV, use the inverter operation enable signal to shut off the inverter output.
  Input the RDY signal of the FR-HC (RDYB signal of the FR-CV).
- For the terminal used for X10 signal input, assign its function by setting "10" (X10) to any of Pr. 178 to Pr. 182.

When using the high-duty brake resistor (FR-ABR)
(FR-D720S-025SC or more, FR-D740-012SC or more)

When using the high-duty brake resistor (FR-ABR), set "1" in Pr. 30. Set 10% in Pr. 70.

When a high power factor converter (FR-HC) is used and automatic restart after instantaneous power failure function is made valid.

- When automatic restart after instantaneous power failure function of both the FR-HC and inverter is made valid (when avalue other than "9999" is set in Pr. 57 "Restart coasting time"), set "2" in Pr. 30.
- Set Pr. 70 to "0%" (initial value).
- When the FR-HC detects power failure during inverter operation, the RDY signal turns on, resulting in the motor coasting. Turning the RDY signal off after power restoration, the inverter detects the motor speed (depends on the Pr. 162 "Automatic restart after instantaneous power failure selection") and restarts automatically after instantaneous power failure.

Regenerative brake duty alarm output and alarm signal (RBP signal)

- [RB] appears on the operation panel and an alarm signal (RBP) is output when 85% of the regenerative brake duty set in Pr. 70 is reached. If the regenerative brake duty reaches 100% of the Pr. 70 setting, a regenerative overvoltage (E.OV1 to E.OV3) occurs. Note that [RB] is not displayed when Pr. 30 = "0".
- The inverter does not trip even when the alarm (RBP) signal is output.
- For the terminal used for the RBP signal output, assign the function by setting "7" (positive logic) or "107" (negative logic) in any of Pr. 190, Pr. 192 or Pr. 197 "Output terminal function selection".

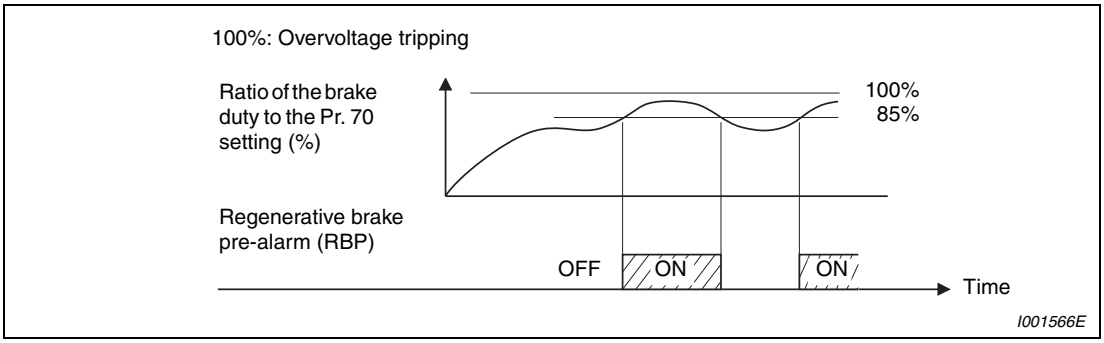

Fig. 6-40: *Regenerative overload*

NOTES

The MRS signal can also be used instead of the X10 signal.

Refer to section 3.6 for connecting the high-duty brake resistor (FR-ABR), brake unit (FR-BU2), high power factor converter (FR-HC), and power regeneration common converter (FR-CV).

When terminal assignment is changed using Pr. 178 to Pr. 182, Pr. 190, Pr. 192 or Pr. 197, the other functions may be affected. Make setting after confirming the function of each terminal.

CAUTION:

The value set in Pr. 70 must not exceed the setting of the brake resistor used. Otherwise, the resistor can overheat.

6.8.3 Stop selection (Pr. 250)

Used to select the stopping method (deceleration to a stop or coasting) when the start signal turns off. Used to stop the motor with a mechanical brake, etc. together with switching off of the start signal. You can also select the operations of the start signals (STF/STR). (Refer to section 6.9.4 for start signal selection.)

Pr. No.	Name	Initial Value	Setting Range	Description	
				Start Signal (STF/STR)	Stop Operation
250	Stop selection	9999	0–100s	STF: Forward rotation start STR: Reverse rotation start	The motor is coasted to a stop when the preset time elapses after the start signal is turned off.
			1000s – 1100s	STF: Start signal STR: Forward/reverse signal	The motor is coasted to a stop (Pr. 250 – 1000)s after the start signal is turned off.
			9999	STF: Forward rotation start STR: Reverse rotation start	When the start signal is turned off, the motor decelerates to stop.
			8888	STF: Start signal STR: Forward/reverse signal	

Parameters referred to	Refer to Section
7 Acceleration time	6.6.1
8 Deceleration time	6.6.1
13 Starting frequency	6.6.2

The above parameter can be set when Pr. 160 = 0.

Set Pr. 250 to "9999" (initial value) or "8888". The motor decelerates to a stop when the start signal (STF/STR) turns off.

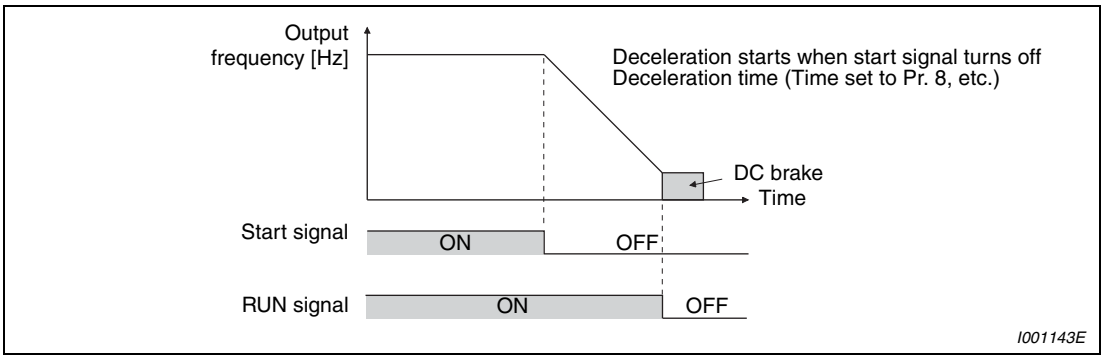

Fig. 6-41: *Stop operation when parameter 250 = 9999*

Use Pr. 250 to set the time from when the start signal turns off until the output is shut off. When any of "1000" to "1100" is set, the output is shut off after (Pr. 250 – 1000)s.
The output is shut off when the time set in Pr. 250 has elapsed after the start signal had turned off. The motor coasts to a stop.

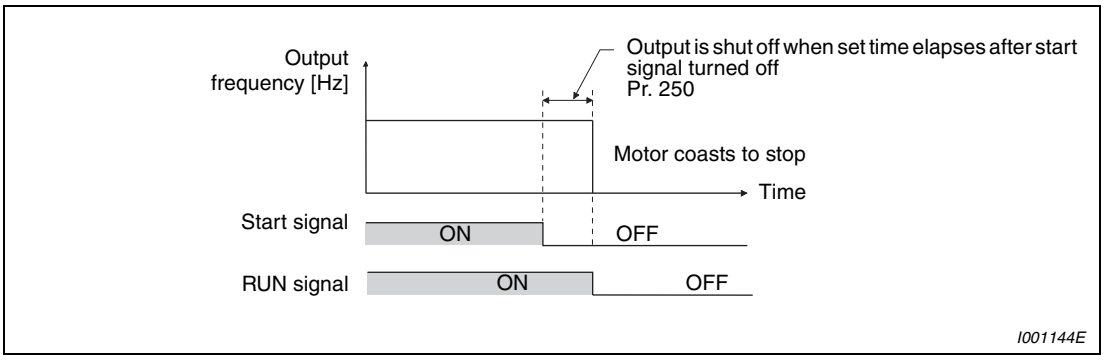

Fig. 6-42: *Stop operation when parameter 250 ≠ 8888 or 9999*

NOTES

The RUN signal turns off when the output stops.

Stop selection is invalid when the following functions are activated.
- Power failure stop function (Pr. 261)
- PU stop (Pr. 75)
- Deceleration stop because of communication error (Pr. 502)
- Jog operation mode

When setting of Pr. 250 is not "9999" or "8888", acceleration/deceleration is performed according to the frequency command, until start signal is OFF and output is shutoff.

When the start signal is turned on again during motor coasting, the motor starts at Pr. 13 "Starting frequency".

6.9 Function assignment of external terminals

Purpose	Parameters that must be set		Refer to Section
Assign function to input terminal	Input terminal function selection	Pr. 178–Pr. 182	6.9.1
Set MRS signal (output shutoff) to normally closed contact specification	MRS input selection	Pr. 17	6.9.2
Assign start signal and forward/reverse command to other signals	Start signal (STF/STF) operation selection	Pr. 250	6.9.4
Assign function to output terminal	Output terminal function selection	Pr. 190, Pr. 192, Pr. 197	6.9.5
Detect output frequency	Up-to-frequency sensitivity Output frequency detection	Pr. 41–Pr. 43	6.9.6
Detect output current	Output current detection Zero current detection	Pr. 150–Pr. 153, Pr. 166, Pr. 167	6.9.7
Remote output function	Remote output	Pr. 495, Pr. 496	6.9.8

6.9.1 Input terminal function selection (Pr. 178 to Pr. 182)

Use these parameters to select/change the input terminal functions.

Pr. No.	Name	Initial Value	Initial Signal	Setting Range
178	STF terminal function selection	60	STF (forward rotation command)	0–5/7/8/10/12/14/16/18/24/25/37/60/62/65–67/9999
179	STR terminal function selection	61	STR (reverse rotation command)	0–5/7/8/10/12/14/16/18/24/25/37/61/62/65–67/9999
180	RL terminal function selection	0	RL (low-speed operation command)	0–5/7/8/10/12/14/16/18/24/25/37/62/65–67/9999
181	RM terminal function selection	1	RM (middle-speed operation command)	
182	RH terminal function selection	2	RH (high speed operation command)	

Parameters referred to	Refer to Section
—	

The above parameters can be set when Pr. 160 = 0.

Input terminal function assignment

Setting	Terminal	Function		Related Parameters	Refer to Page
0	RL	Pr. 59 = 0 (initial value)	Low-speed operation command	Pr. 4–Pr. 6, Pr. 24–Pr. 27, Pr. 232–Pr. 239	6-48
		Pr. 59 ≠ 0 ①	Remote setting (setting clear)	Pr. 59	6-55
1	RM	Pr. 59 = 0 (initial value)	Middle-speed operation command	Pr. 4–Pr. 6, Pr. 24–Pr. 27, Pr. 232–Pr. 239	6-48
		Pr. 59 ≠ 0 ①	Remote setting (deceleration)	Pr. 59	6-55
2	RH	Pr. 59 = 0 (initial value)	High-speed operation command	Pr. 4–Pr. 6, Pr. 24–Pr. 27, Pr. 232–Pr. 239	6-48
		Pr. 59 ≠ 0 ①	Remote setting (acceleration)	Pr. 59	6-55
3	RT	Second function selection		Pr. 44–Pr. 51	6-93
4	AU	Terminal 4 input selection		Pr. 267	6-147
5	JOG	Jog operation selection		Pr. 15, Pr. 16	6-51
7	OH	External thermal relay input ②		Pr. 9	6-66
8	REX	15 speed selection (combination with three speeds RL, RM, RH)		Pr. 4–Pr. 6, Pr. 24–Pr. 27, Pr. 232–Pr. 239	6-48
10	X10	Inverter operation enable signal (FR-HC-, FR-CV connection)		Pr. 30, Pr. 70	6-84
12	X12	PU operation external interlock		Pr. 79	6-172
14	X14	PID control valid terminal		Pr. 127–Pr. 134	6-242
16	X16	PU-external operation switchover (turning on X16 selects external operation)		Pr. 79, Pr. 340	6-181
18	X18	V/f switchover (V/f control is exercised when X18 is on)		Pr. 80	6-29, 6-74
24	MRS	Output stop		Pr. 17	6-91
25	STOP	Start self-holding selection		—	6-94
37	X37	Traverse function selection		Pr. 592–Pr. 597	6-264
60	STF	Forward rotation command (assigned to STF terminal (Pr. 178) only)		—	6-94
61	STR	Reverse rotation command (assigned to STR terminal (Pr. 179) only)		—	6-94
62	RES	Inverter reset		—	—
65	X65	PU/NET operation switchover (turning on X65 selects PU operation)		Pr. 79, Pr. 340	6-184
66	X66	External/NET operation switchover (turning on X66 selects NET operation)		Pr. 79, Pr. 340	6-184
67	X67	Command source switchover (turning on X67 makes Pr. 338 and Pr. 339 commands valid)		Pr. 338, Pr. 339	6-186
9999	—	No function		—	—

Tab. 6-11: *Input terminal function assignment*

① When Pr. 59 ≠ 0, the functions of the RL, RM and RH signals are changed as given in the table.

② The OH signal turns on when the relay contact "opens".

NOTES

Changing the terminal assignment using Pr. 178 to Pr. 182 may affect the other functions. Please make setting after confirming the function of each terminal.

Same function can be assigned to two or more terminals. In this case, the logic of terminal input is OR.

The priorities of the speed commands are in order of jog > multi-speed setting (RH, RM, RL, REX) > PID (X14).

When the X10 signal (FR-HC, FR-CV connection - inverter operation enable signal) is not set, the MRS signal shares this function.

When the PU operation external interlock (X12) signal is not assigned at the Pr. 79 "Operation mode selection" setting of "7", the MRS signal shares this function.

Use common terminals to assign multi-speeds (7 speeds) and remote setting. They cannot be set individually. (Common terminals are used since these functions are designed for speed setting and need not be set at the same time.)

When V/f control is selected by V/f switchover (X18 signal), second function is also selected at the same time. Control between V/f and general-purpose magnetic flux can not be switched during operation. In case control is switched between V/f and general-purpose magnetic flux, only second function is selected.

Turning the AU signal on makes terminal 2 (voltage input) invalid.

Response time of each signal

The response time of the X10 signal and MRS signal is within 2ms.
The response time of other signals is within 20ms.

6.9.2 Inverter output shutoff signal (MRS signal, Pr. 17)

The inverter output can be shut off from the MRS signal. The logic of the MRS signal can also be selected.

Pr. No.	Name	Initial Value	Setting Range	Description
17	MRS input selection	0	0	Normally open input
			2	Normally closed input (NC contact input specifications)
			4	External terminal: Normally closed input (NC contact input specifications) Communication: Normally open input

Parameters referred to		Refer to Section
178–182	Input terminal function selection	6.9.1

The above parameter can be set when Pr. 160 = 0.

Output shutoff signal

Turning on the output shutoff signal (MRS) during inverter running shuts off the output immediately. When using the MRS signal, set "24" to any of Pr. 178 to Pr. 182 to assign the function

.

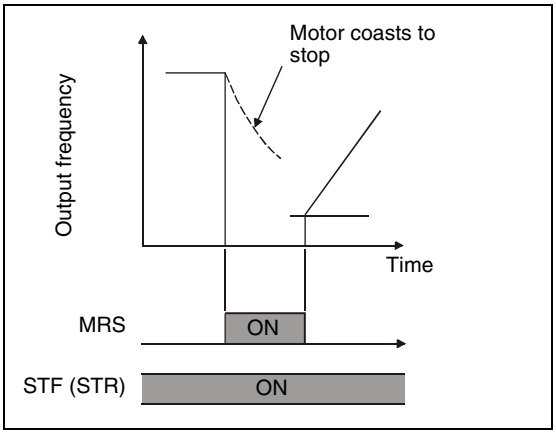

Fig. 6-43:
Output shutoff signal

Terminal MRS may be used as described below:

- When mechanical brake (e.g. electromagnetic brake) is used to stop motor.
  The inverter output is shut off when the mechanical brake operates.
- To provide interlock to disable operation by the inverter.
  With the MRS signal on, the inverter cannot be operated if the start signal is entered into the inverter.
- Coast the motor to a stop.
  When the start signal is turned off, the inverter decelerates the motor to a stop in the preset deceleration time, but when the MRS signal is turned on, the motor coasts to a stop.

MRS signal logic inversion

When Pr. 17 is set to "2", the MRS signal (output stop) can be changed to the normally closed (NC contact) input specification. When the MRS signal turns on (opens), the inverter shuts off the output.

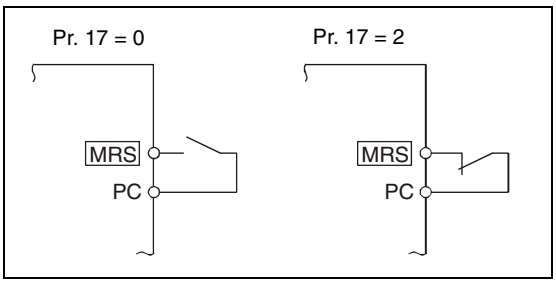

Fig. 6-44: *Connection of the MRS terminal in source logic*

Assign a different action for each MRS signal input from communication and external terminal (Pr. 17 = 4)

When Pr. 17 is set to "4", the MRS signal from external terminal (output stop) can be changed to the normally closed (NC contact) input, and the MRS signal from communication can be changed to the normally open (NO contact) input. This function is useful to perform operation by communication with MRS signal from external terminal remained on.

External MRS	Communication MRS	Pr. 17		
		0	2	4
OFF	OFF	Operation enabled	Output shutoff	Output shutoff
OFF	ON	Output shutoff	Output shutoff	Output shutoff
ON	OFF	Output shutoff	Output shutoff	Operation enabled
ON	ON	Output shutoff	Operation enabled	Output shutoff

Tab. 6-12: *Activating the output shutoff by external signal or communication*

NOTES

When using an external terminal to input the MRS signal, the MRS signal shuts off the output in any of the operation modes.

Changing the terminal assignment using Pr. 178 to Pr. 182 may affect the other functions. Make setting after confirming the function of each terminal.

6.9.3 Condition selection of function validity by second function selection signal (RT, Pr. 155)

You can select the second function using the RT signal. For the RT signal, set "3" in any of Pr. 178 to Pr. 182 to assign the function.

The second function has the following applications:

- Switching between normal use and emergency use.
- Switching between heavy load and light load.
- Changing of acceleration/deceleration time by broken line acceleration/deceleration.
- Switching of characteristic between main motor and sub motor.

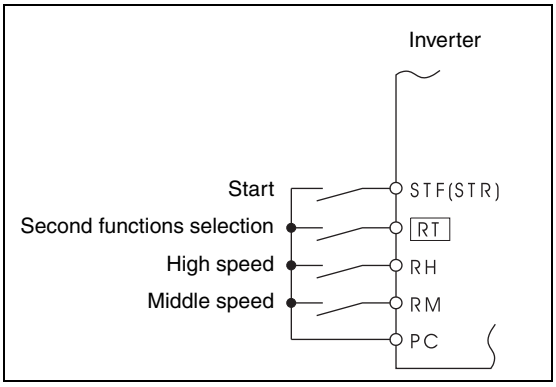

I001145C

Fig. 6-45: *Second functions connection diagram*

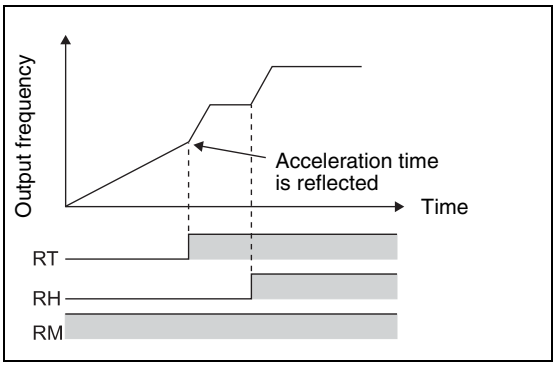

I001794E

Fig. 6-46: *Second acceleration/deceleration time example*

Following functions that can be set as second functions:

Function	Parameter Number as		Refer to Page
	1. function	2. function	
Torque boost	Pr. 0	Pr. 46	6-26
Base frequency	Pr. 3	Pr. 47	6-44
Acceleration time	Pr. 7	Pr. 44	6-59
Deceleration time	Pr. 8	Pr. 44, Pr. 45	6-59
Electronic thermal relay function	Pr. 9	Pr. 51	6-66
Stall prevention	Pr. 22	Pr. 48	6-33
Applied motor	Pr. 71	Pr. 450	6-72

Tab. 6-13: *Functions that can be set as second functions*

NOTES

When the RT signal is on, the above second function is selected at the same time.

Changing the terminal assignment using Pr. 178 to Pr. 182 may affect the other functions. Make setting after confirming the function of each terminal.

6.9.4 Start signal selection (Terminal STF, STR, STOP, Pr. 250)

You can select the operation of the start signal (STF/STR).

Used to select the stopping method (deceleration to a stop or coasting) when the start signal turns off. Used to stop the motor with a mechanical brake, etc. together with switching off of the start signal. (Refer to section 6.8.3 for stop selection.)

Pr. No.	Name	Initial Value	Setting Range	Description	
				Start Signal (STF/STR)	Stop Operation
250	Stop selection	9999	0–100s	STF: Forward rotation start STR: Reverse rotation start	The motor is coasted to a stop when the preset time elapses after the start signal is turned off.
			1000s – 1100s	STF: Start signal STR: Forward/reverse signal	The motor is coasted to a stop (Pr. 250 – 1000)s after the start signal is turned off.
			9999	STF: Forward rotation start STR: Reverse rotation start	When the start signal is turned off, the motor decelerates to stop.
			8888	STF: Start signal STR: Forward/reverse signal	

Parameters referred to		Refer to Section
4–6	Multi-speed setting	6.5.1
178–182	Input terminal function selection	6.9.1

The above parameter can be set when Pr. 160 = 0.

2-wire type (terminals STF and STR)

A two-wire type connection is shown below.

In the initial setting, the forward/reverse rotation signals (STF/STR) are used as start and stop signals. Turn on either of the forward and reverse rotation signals to start the motor in the corresponding direction. If both are turned off (or on) during operation, the inverter decelerates to a stop.

The speed setting signal may either be given by entering 0 to 10V DC across the speed setting input terminal 2-5, by setting the required values in Pr. 4 to Pr. 6 "Multi-speed setting" (high, middle, low speeds), etc. (For multi-speed operation, refer to section 6.5.1).

When Pr. 250 is set to any of "1000 to 1100, 8888", the STF signal becomes a start command and the STR signal a forward/reverse command.

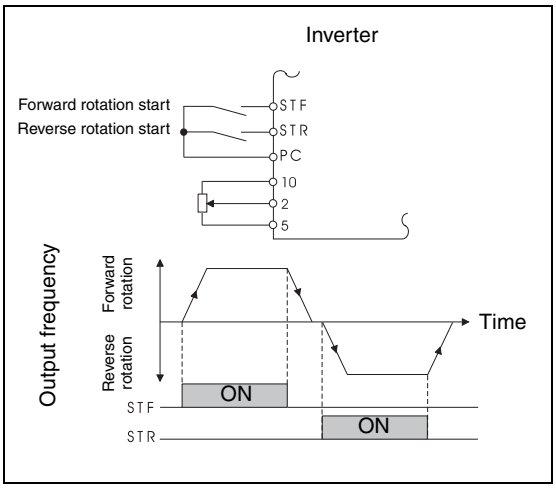

Fig. 6-47:
2-wire type connection (Pr. 250 = 9999)

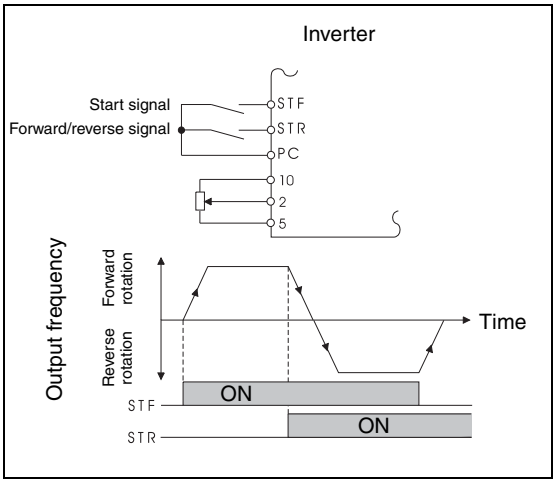

Fig. 6-48:
2-wire type connection (Pr. 250 = 8888)

NOTES

When Pr. 250 is set to any of "0 to 100, 1000 to 1100", the motor coasts to a stop if the start command is turned off. (Refer to section 6.8.3.)

The STF and STR signals are assigned to the STF and STR terminals in the initial setting. The STF signal can be assigned to Pr. 178 "STF terminal function selection" and the STR signal to Pr. 179 "STR terminal function selection" only.

3-wire type (terminals STF, STR and STOP)

A three-wire type connection is shown below.

The start self-holding selection becomes valid when the STOP signal is turned on. In this case, the forward/reverse rotation signal functions only as a start signal.

If the start signal (STF or STR) is turned on and then off, the start signal is held and makes a start. When changing the direction of rotation, turn STR (STF) on once and then off. To stop the inverter, turning off the STOP signal once decelerates it to a stop. When using the STOP signal, set "25" in Pr. 178 to Pr. 182 to assign function.

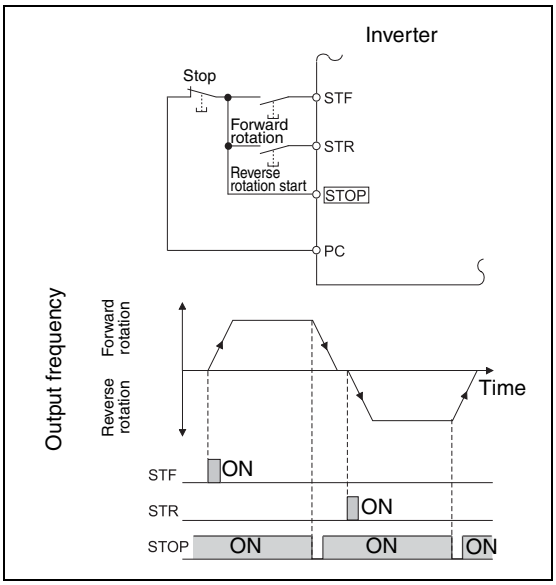

I001150E

Fig. 6-49:
3-wire type connection (Pr. 250 = 9999)

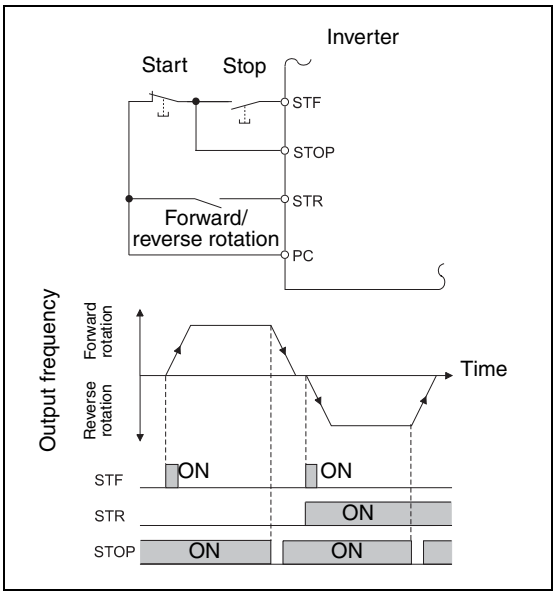

I001151E

Fig. 6-50:
3-wire type connection (Pr. 250 = 8888)

NOTES

When the JOG signal is turned on to enable jog operation, the STOP signal becomes invalid.

If the MRS signal is turned on to stop the output, the self-holding function is not cancelled.

Start signal selection

STF	STR	Setting Inverter Status	
		Pr. 250 = 0–100s/9999	Pr. 250 = 1000–1100s/8888
OFF	OFF	Stop	Stop
OFF	ON	Reverse rotation	
ON	OFF	Forward rotation	Forward rotation
ON	ON	Stop	Reverse rotation

Tab. 6-14: *Start signal selection*

6.9.5 Output terminal function selection (Pr. 190, Pr. 192, Pr. 197)

You can change the functions of the open collector output terminal and relay output terminal.

Pr. No.	Name		Initial Value	Initial Signal	Setting Range
190	RUN terminal function selection	Open collector output terminal	0	RUN (inverter running)	0/1/3/4/7/8/11–16/25/26/46/47/64/70/80/81/90/91/93/95/96/98/99/100/101/103/104/107/108/111–116/125/126/146/147/164//170/180/181/190/191/193/195/196/198/199/9999
192	ABC terminal function selection	Relay output terminal	99	ALM (alarm output)	0/1/3/4/7/8/11–16/25/26/46/47/64/70/80/81/90/91/95/96/98/99/100/101/103/104/107/108/111–116/125/126/146/147/164/170/180/181/190/191/195/196/198/199/9999
197	SO terminal function selection	Open collector output terminal	80	SAFE (Safety monitor output)	0/1/3/4/7/8/11–16/25/26/46/47/64/70/80/81/90/91/93/95/96/98/99/100/101/103/104/107/108/111–116/125/126/146/147/164/170/180/181/190/191/193/195/196/198/199

Parameters referred to	Refer to Section
13 Starting frequency	6.6.2

The above parameter can be set when Pr. 160 = 0.

You can set the functions of the output terminals.
Refer to the following table and set the parameters:
0–99: Source logic
100–199: Sink logic

Setting		Terminal	Function	Operation	Related Parameters	Refer to Page
Source Logic	Sink Logic					
0	100	RUN	Inverter running	Output during operation when the inverter output frequency rises to or above Pr. 13 "Starting frequency".	—	6-101
1	101	SU	Up to frequency ①	Output when the output frequency is reached to the set frequency.	Pr. 41	6-103
3	103	OL	Overload alarm	Output while stall prevention function is activated.	Pr. 22, Pr. 23, Pr. 66	6-33
4	104	FU	Output frequency detection	Output when the output frequency reaches the frequency setting in Pr. 42 (Pr. 43 for reverse rotation).	Pr. 42, Pr. 43	6-103
7	107	RBP	Regenerative brake prealarm	Output when 85% of the regenerative brake duty set in Pr. 70 is reached.	Pr. 70	6-84

Tab. 6-15: *Output terminal function assignment (1)*

Setting		Terminal	Function	Operation	Related Parameters	Refer to Page
Source Logic	Sink Logic					
8	108	THP	Electronic thermal O/L relay pre-alarm	Output when the electronic thermal relay function cumulative value reaches 85%. (Electronic thermal relay function protection (E.THT/ E.THM) activates, when the value reached 100%.)	Pr. 9, Pr. 51	6-70
11	111	RY	Inverter operation ready	Output when the inverter can be started by switching the start signal on or while it is running.	—	6-101
12	112	Y12	Output current detection	Output when the output current is higher than the Pr. 150 setting for longer than the time set in Pr. 151.	Pr. 150, Pr. 151	6-105
13	113	Y13	Zero current detection	Output when the output power is lower than the Pr. 152 setting for longer than the time set in Pr. 153.	Pr. 152, Pr. 153	6-105
14	114	FDN	PID lower limit	Output when the feedback value falls below the lower limit of PID control.	Pr. 127–Pr. 134, Pr. 575–Pr. 577	6-242
15	115	FUP	PID upper limit	Output when the feedback value rises above the upper limit of PID control.		
16	116	RL	PID forward/reverse rotation output	Output when forward rotation is performed in PID control.		
25	125	FAN	Fan fault output	Output at the time of a fan fault.	Pr. 244	6-270
26	126	FIN	Heatsink overheat prealarm	Output when the heatsink temperature reaches about 85% of the heatsink overheat protection providing temperature.	—	7-12
46	146	Y46	During deceleration at occurrence of power failure (retained until release)	Output when the power failure-time deceleration function is executed.	Pr. 261	6-134
47	147	PID	During PID control activated	Output during PID control.	Pr. 127–Pr. 134, Pr. 575–Pr. 577	6-242
64	164	Y64	During retry	Output during retry processing.	Pr. 65–Pr. 69	6-138
70	170	SLEEP	PID output interruption	Output when the PID output interruption function is executed.	Pr. 127–Pr. 134, Pr. 575–Pr. 577	6-242
80	180	SAFE	Safety monitor output	Output while safety stop function is activated.	—	3-22
81	181	SAFE2	Safety monitor output 2	Output while safety circuit fault (E.SAF) is not activated.	—	3-22

Tab. 6-15: *Output terminal function assignment (2)*

Setting		Terminal	Function	Operation	Related Parameters	Refer to Page
Source Logic	Sink Logic					
90	190	Y90	Life alarm	Output when any of the control circuit capacitor, main circuit capacitor and inrush current limit circuit or the cooling fan approaches the end of its service life.	Pr. 255–Pr. 259	6-272
91	191	Y91	Alarm output 3 (power-off signal)	Output when an error occurs due to the circuit failure or connection alarm of the inverter.	—	6-102
93	193	Y93	Current average value monitor signal	Average current value and maintenance timer value are output as pulses. The signal can not be set in Pr. 192 "ABC terminal function selection".	Pr. 555–Pr. 557	6-277
95	195	Y95	Maintenance timer signal	Output when Pr. 503 rises to or above the Pr. 504 setting.	Pr. 503, Pr. 504	6-276
96	196	REM	Remote Output	Output to the terminal when a value is set to the parameter.	Pr. 495, Pr. 496	6-107
98	198	LF	Minor fault output	Output when a minor fault (fan failure or communication error warning) occurs.	Pr. 121, Pr. 244	6-198, 6-270
99	199	ALM	Alarm output	Output when the inverter's protective function is activated to stop the output (major fault). The signal output is stopped when a reset turns on.	—	6-102
9999		—	No function	—	—	—

Tab. 6-15: *Output terminal function assignment (3)*

① Note that when the frequency setting is varied using an analog signal or the digital dial of the operation panel, the output of the SU (up to frequency) signal may alternate on and off depending on that varying speed and the timing of the varying speed due to acceleration/deceleration time setting. (The output will not alternate on and off when the acceleration/deceleration time setting is "0s".)

NOTES

The same function may be set to more than one terminal.

When the function is executed, the terminal conducts at the setting of any of "0" to "99", and does not conduct at the setting of any of "100" to "199".

Changing the terminal assignment using Pr. 190, Pr. 192 or Pr. 197 may affect the other functions. Make setting after confirming the function of each terminal.

Do not assign signals which repeat frequent ON/OFF to A, B, and C. Otherwise, the life of the relay contact decreases.

Refer to section 3.4 for the common terminal of each terminal.

Inverter operation ready signal (RY) and inverter running signal (RUN)

When the inverter is ready to operate, the output of the operation ready signal (RY) is on. It is also on during inverter running.

When the output frequency of the inverter rises to or above Pr. 13 "Starting frequency", the output of the inverter running signal (RUN) is turned on. During an inverter stop or DC injection brake operation, the output is off.

When using the RY or RUN signal, set "11 (source logic)" or "111 (sink logic)" (RY) or "0 (source logic)" or "100 (sink logic)" (RUN) to any of Pr. 190, Pr. 192 or Pr. 197 to assign the function to the output terminal.

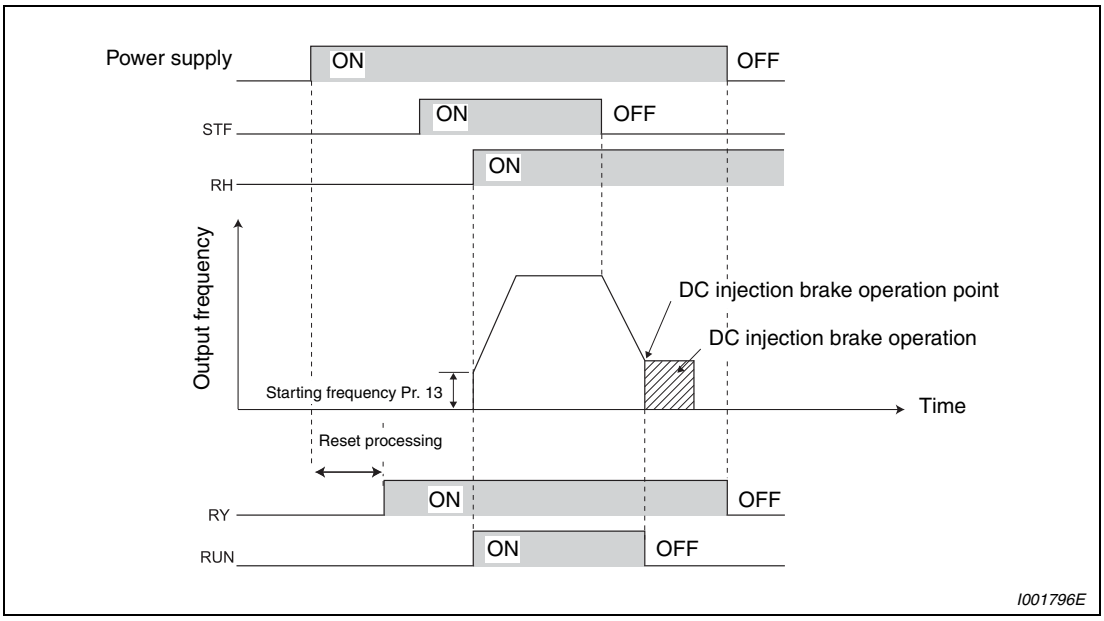

Fig. 6-51: *Ready and motor running signals*

Output Signal	Start Signal OFF (during stop)	Start Signal ON (during stop)	Start Signal ON (during operation)	Under DC Injection Brake	Output shutoff ②	Automatic Restart after Instantaneous Power Failure		
						Coasting		Restart-ing
						Start Signal ON	Start Signal OFF	
RY	ON	ON	ON	ON	OFF	ON ①		ON
RUN	OFF	OFF	ON	OFF	OFF	OFF		ON

Tab. 6-16: *Output signal output*

① This signal turns OFF during power failure or undervoltage.

② Output is shutoff under conditions such as a fault occurrence, MRS signal ON, and the safety stop operation.

NOTE The RUN signal (positive logic) is assigned to the terminal RUN in the initial setting.

Alarm output signal (ALM)

If the inverter comes to trip, the ALM signal is output. (Refer to section 7.1.)

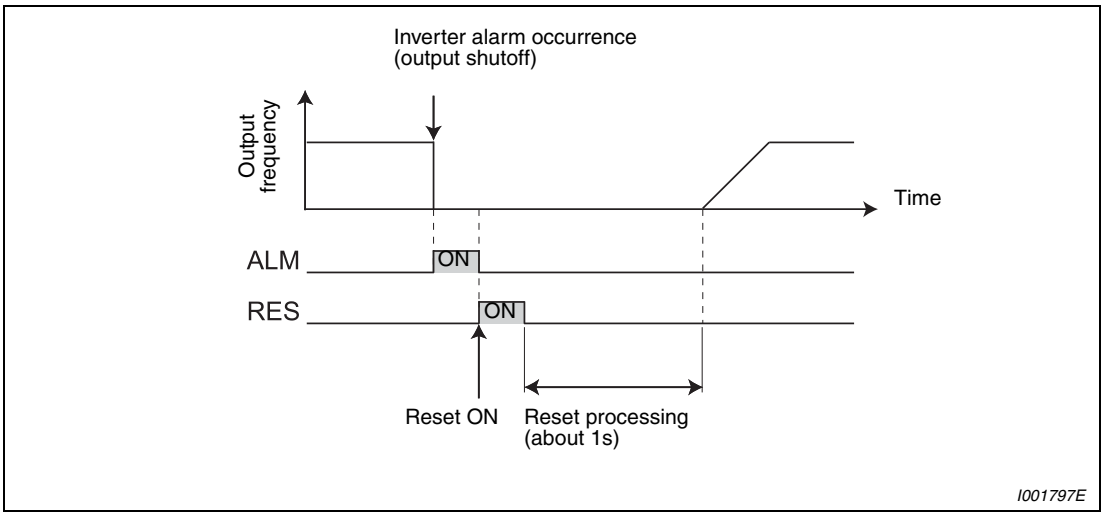

Fig. 6-52: *Alarm signals*

NOTE

The ALM signal is assigned to the ABC contact in the default setting. By setting "99" (positive logic) or "199" (negative logic) in Pr. 190, Pr. 192 or Pr. 197, the ALM signal can be assigned to the other signal.

Fault output 3 (power-off signal) (Y91)

The Y91 signal is output at occurrence of a fault attributable to the failure of the inverter circuit or a fault caused by a wiring mistake. When using the Y91 signal, set "91 (positive logic)" or "191 (negative logic)" to any of Pr. 190, Pr. 192 or Pr. 197 to assign the function to the output terminal.

Operation Panel Indication		Name
E. bE	E.BE	Brake transistor alarm detection
E. GF	E.GF	Output side earth (ground) fault overcurrent
E. LF	E.LF	Output phase loss
E. PE	E.PE	Parameter storage device fault
E.CPU	E.CPU	CPU fault
E.I OH	E.IOH	Inrush current limit circuit fault

Tab. 6-17: *Faults that lead to Y91 signal output*

NOTE

At occurrence of output side earth (ground) fault overcurrent (E.GF), overcurrent trip during acceleration (E.OC1) may be displayed. At this time, the Y91 signal is output.

6.9.6 Detection of output frequency (SU, FU, Pr. 41 to Pr. 43)

The inverter output frequency is detected and output to the output signal.

Pr. No.	Name	Initial Value	Setting Range	Description
41	Up-to-frequency sensitivity	10%	0–100%	Set the level where the SU signal turns on.
42	Output frequency detection	6Hz	0–400Hz	Set the frequency where the FU signal turns on.
43	Output frequency detection for reverse rotation	9999	0–400Hz	Set the frequency where the FU signal turns on in reverse rotation.
			9999	Same as Pr. 42 setting

Parameters referred to		Refer to Section
190/192/ 197	Output terminal function selection	6.9.5

The above parameters can be set when Pr. 160 = 0.

Up-to-frequency sensitivity (SU, Pr. 41)

When the output frequency reaches the set frequency, the up-to-frequency signal (SU) is output. The Pr. 41 value can be adjusted within the range 0% to ±100% on the assumption that the set frequency is 100%.

This parameter can be used to ensure that the running frequency has been reached to provide the operation start signal etc. for related equipment.

When using the SU signal, set "1 (positive logic) or 101 (negative logic)" in Pr. 190, Pr. 192 or Pr. 197 to assign function to the output terminal.

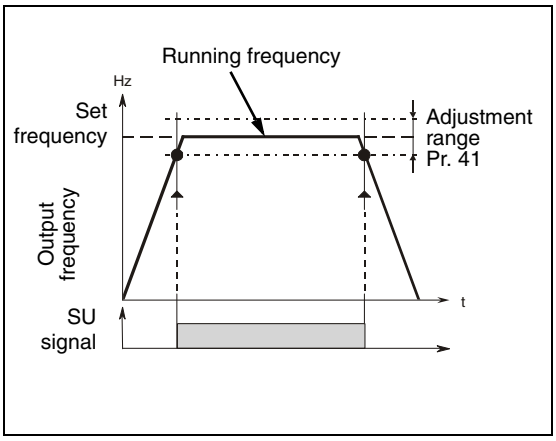

Fig. 6-53:
Output of the SU signal

I000020C

Output frequency detection (FU, Pr. 42, Pr. 43)

The output frequency detection signal (FU) is output when the output frequency reaches or exceeds the Pr. 42 setting. This function can be used for electromagnetic brake operation, open signal, etc.

When the detection frequency is set to Pr. 43, frequency detection for reverse operation use only can also be set. This function is effective for switching the timing of electromagnetic brake operation between forward rotation (rise) and reverse rotation (fall) during vertical lift operation,etc. When Pr. 43 ≠ 9999, the Pr. 42 setting is used for forward rotation and the Pr. 43 setting is used for reverse rotation.

The FU signal can also be assigned to the other terminal by setting "4" (positive logic) or "104" (negative logic) in any of Pr. 190, Pr. 192 or Pr. 197.

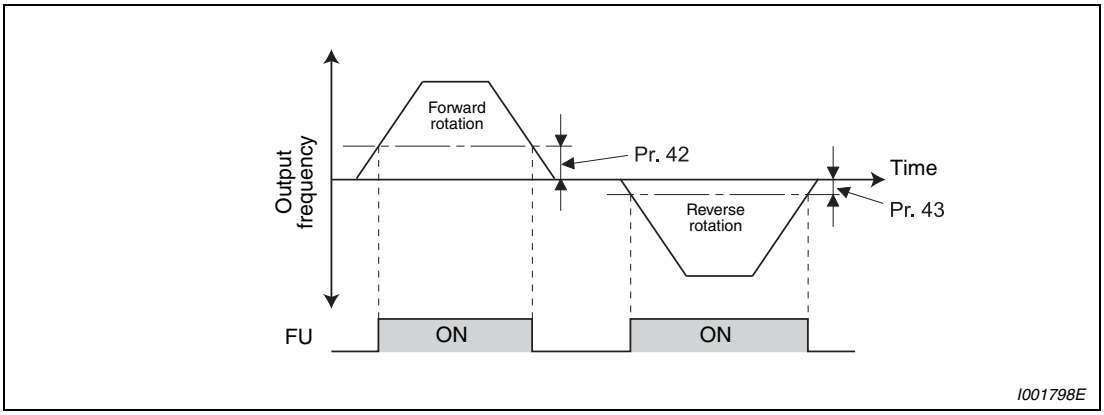

Fig. 6-54: *Frequency detection for forward and reverse rotation*

NOTES

All signals are off during DC injection brake.

The output frequency to be compared with the set frequency is the output frequency before slip compensation is performed.

Changing the terminal assignment using Pr. 190, Pr. 192 or Pr. 197 may affect the other functions. Make setting after confirming the function of each terminal.

6.9.7 Output current detection function (Y12, Y13, Pr. 150 to Pr. 153, Pr. 166, Pr. 167)

The output power during inverter running can be detected and output to the output terminal.

Pr. No.	Name	Initial Value	Setting Range	Description
150	Output current detection level	150%	0–200%	Set the output current detection level. 100% is the rated inverter current.
151	Output current detection signal delay time	0s	0–10s	Set the output current detection period. Set the time from when the output current has risen above the setting until the output current detection signal (Y12) is output.
152	Zero current detection level	5%	0–200%	Set the zero current detection level. The rated inverter current is assumed to be 100%.
153	Zero current detection time	0.5s	0–1s	Set this parameter to define the period from when the output current drops below the Pr. 152 value until the zero current detection signal (Y13) is output.
166	Output current detection signal retention time	0.1 s	0–10 s	Set the retention time when the Y12 signal is ON.
			9999	The Y12 signal ON status is retained. The signal is turned off at the next start.
167	Output current detection operation selection	0	0	Operation continues when the Y12 signal is ON
			1	The inverter is brought to trip when the Y12 signal is ON. (E.CDO)

Parameters referred to		Refer to Section
190/192/ 197	Output terminal function selection	6.9.5

The above parameters can be set when Pr. 160 = 0.

Output current detection (Y12, Pr. 150, Pr. 151, Pr. 166, Pr. 167)

The output current detection function can be used for excessive torque detection, etc.

If the output current remains higher than the Pr. 150 setting during inverter operation for longer than the time set in Pr. 151, the output current detection signal (Y12) is output from the inverter's open collector or relay output terminal. When Pr. 166 = "9999", the ON state is held until a next start.
At the Pr. 166 setting of "1", the inverter trips, and the output current detection fault (E.CDO) is displayed when the Y12 signal turns ON. When fault occurs, the Y12 signal is ON for the time set in Pr. 166 at the Pr. 166 setting of other than 9999, and remains ON until a reset is made at the Pr. 166 setting of 9999. E.CDO does not occur even if "1" is set in Pr. 167 while Y12 is ON. The Pr. 167 setting is valid after Y12 turns OFF

For the Y12 signal, set "12" (positive logic) or "112" (negative logic) in Pr. 190, Pr. 192 or Pr. 197 and assign functions to the output terminal.

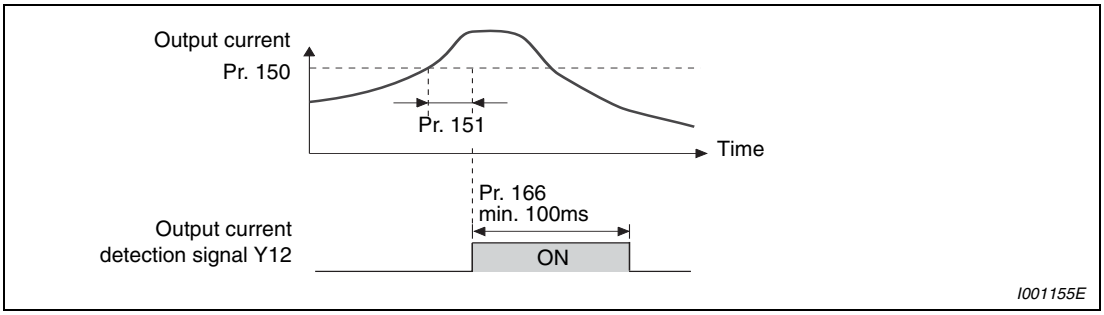

Abb. 6-55: *Output current detection (Pr. 166 ≠ 9999, Pr. 167 = 0)*

Zero current detection (Y13, Pr. 152, Pr. 153)

If the output current remains lower than the Pr. 152 setting during inverter operation for longer than the time set in Pr. 153, the zero current detection (Y13) signal is output from the inverter's open collector or relay output terminal. As soon as the signal is output to terminal Y13, it remains turned on for 100ms.

When the inverter's output current falls to "0", torque will not be generated. This may cause a drop due to gravity when the inverter is used in vertical lift application. To prevent this, the output current zero signal (Y13) can be output from the inverter to close the mechanical brake when the output current has fallen to "zero".

Set "13" (source logic) or "113" (sink logic) to any of Pr. 190, Pr. 192 or Pr. 197 to assign the function of the output power detection signal (Y13) to the output terminal.

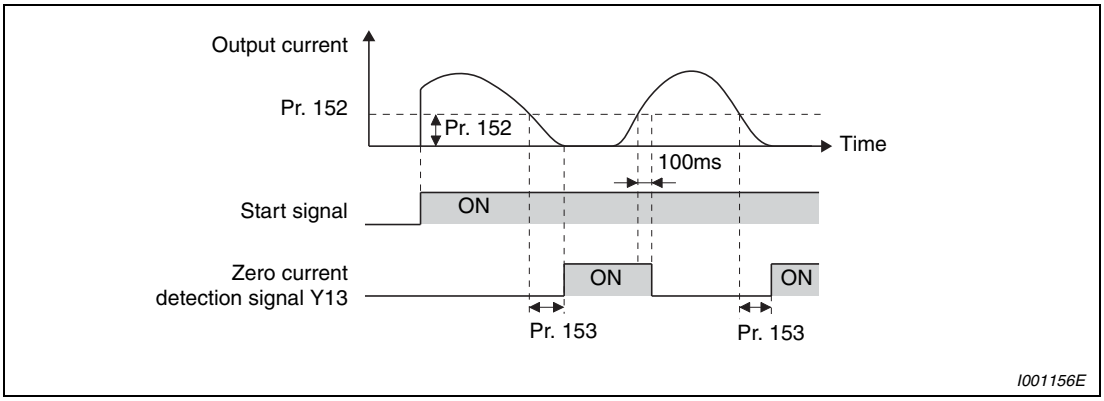

Fig. 6-56: *Zero current detection*

NOTES

This function is also valid during execution of the online auto tuning.

The response time of Y12 and Y13 signals is approximately 0.1s. Note that the response time changes according to the loadcondition.

When Pr. 152 = "0", detection is disabled.

Changing the terminal assignment using of Pr. 190, Pr. 192 or Pr. 197 may affect the other functions. Make setting after confirming the function of each terminal.

CAUTION:

The zero current detection level setting should not be too high, and the zero current detection time setting not too long. Otherwise, the detection signal may not be output when torque is not generated at a low output current.
To prevent the machine and equipment from resulting in hazardous conditions by use of the zero current detection signal, install a safety backup such as an emergency brake.

6.9.8 Remote output function (REM, Pr. 495, Pr. 496)

You can utilize the on/off of the inverter's output signals instead of the remote output terminal of the programmable logic controller.

Pr. No.	Name	Initial Value	Setting Range	Description	
495	Remote output selection	0	0	Remote output data clear at powering off	Remote output data clear at inverter reset
			1	Remote output data retention at powering off	
			10	Remote output data clear at powering off	Remote output data retention at inverter reset
			11	Remote output data retention at powering off	
496	Remote output data 1 ①	0	0–4095	Refer to Fig. 6-57	

Parameters referred to		Refer to Section
190/192/ 197	Output terminal function selection	6.9.5

The above parameters can be set when Pr. 160 = 0.

① The above parameters allow its setting to be changed during operation in any operation mode even if "0" (initial value) is set in Pr. 77 "Parameter write selection".

The output terminal can be turned on/off depending on the Pr. 496 setting. The remote output selection can be controlled on/off by computer link communication from the PU connector.

Set "96" (positive logic) or "196" (negative logic)" to any of of Pr. 190, Pr. 192 or Pr. 197, and assign the remote output (REM) signal to the terminal used for remote output.

By setting "1", the output terminal turns on (off for sink logic). By setting "0", the output terminal turns off (on for sink logic) (refer to Fig. 6-57).

Example ▽ When "96" (source logic) is set to Pr. 190 "RUN terminal function selection" and "1" (H01) is set to Pr. 496, the terminal RUN turns on.

△

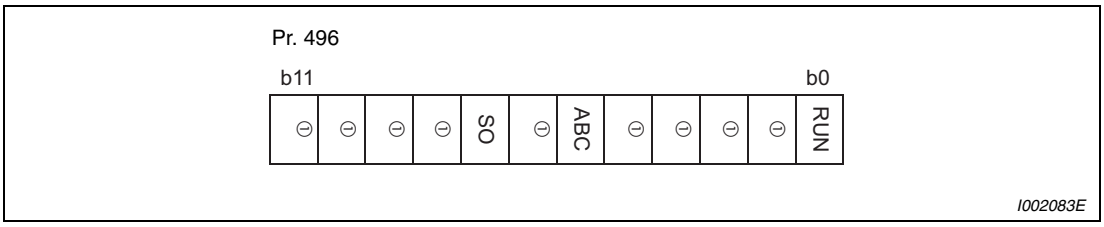

Fig. 6-57: *Remote output data*

① Not assigned (always "0" when read).

When Pr. 495 = "0" (initial value) or "10", performing a power supply reset (including a power failure) clears the REM signal output. (The ON/OFF states of the terminals are as set in Pr. 190, Pr. 192 or Pr. 197.) The Pr. 496 setting is also "0".

When Pr. 495 = "1" or "11", the remote output data before power supply-off is stored into the E²PROM, so the signal output at power recovery is the same as before power supply-off. However, it is not stored when the inverter is reset (terminal reset, reset request through communication). (See the chart below).

When Pr. 495 = "10" or "11", signal before rest is saved even at inverter reset.

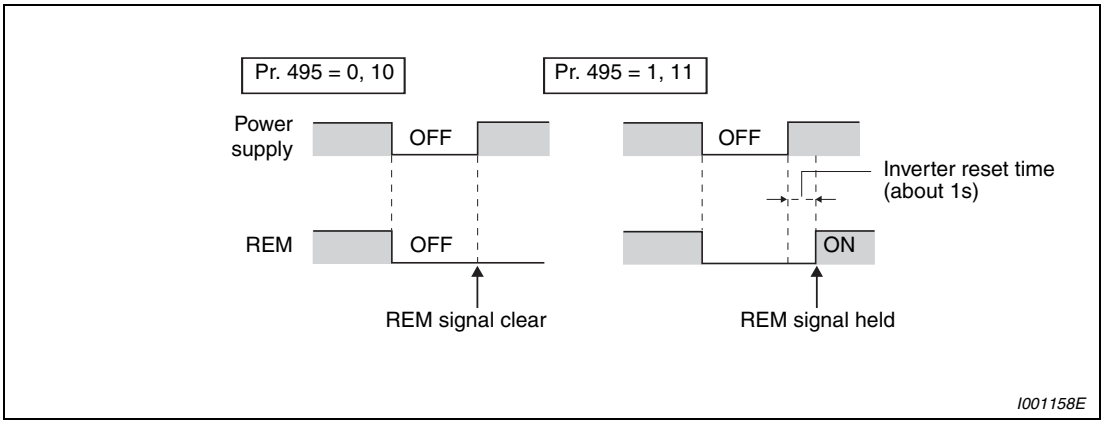

Fig. 6-58: *ON/OFF example for source logic*

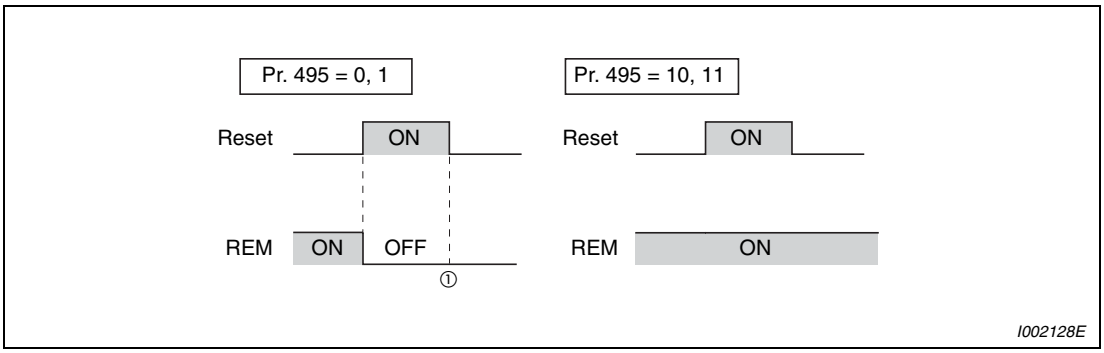

Fig. 6-59: *Signal condition during a reset*

① When Pr. 495 = "1," the signal condition saved in EEPROM (condition of the last power OFF) is applied.

NOTES

The output terminal where the REM signal is not assigned using any of Pr. 190, Pr. 192 or Pr. 197 does not turn on/off if 0/1 is set to the terminal bit of Pr. 496. (It turns on/off with the assigned function.)

6.10 Monitor display and monitor output signals

Purpose	Parameters that must be set		Refer to Section
Display motor speed Set speed	Speed display and speed setting	Pr. 37	6.10.1
Change PU monitor display data	Monitor display/ PU main display data selection Cumulative monitor clear	Pr. 52, Pr. 158, Pr. 170, Pr. 171, Pr. 268, Pr. 563, Pr. 564, Pr. 891	6.10.2
Change of the monitor output from terminal AM	Terminal AM function selection	Pr. 158	6.10.3
Set the reference of the monitor output from terminal AM	Terminal AM standard setting	Pr. 55, Pr. 56	6.10.3
Adjust terminal AM outputs	Terminal AM calibration	Pr. 901	6.10.4

6.10.1 Speed display and speed setting (Pr. 37)

You can output RPM rates, speeds and throughput volumes based on the output frequency to the displays of the operation panels, FR-PU04 and FR-PU07 parameter units or to the AM output.

Pr. No.	Name	Initial Setting	Setting Range	Description
37	Speed display	0	0	Frequency display, setting
			0.01–9998	Set the machine speed at 60Hz.

Parameters referred to		Refer to Section
1	Maximum frequency	6.3.1
18	High speed maximum frequency	6.3.1
52	DU/PU main display data selection	6.10.2

The above parameters can be set when Pr. 160 = 0.

The maximum value of the setting range differs according to the Pr. 1 "Maximum frequency" (Parameter 18 "High speed maximum frequency") and it can be calculated from the following formula:

$$\text{Maximum setting value of Pr. 37} < \frac{16777.215 \times 60\ [\text{Hz}]}{\text{Setting value of Pr. 1(Pr. 18) [Hz]}}$$

Note that the maximum setting value of Pr. 37 is 9998 if the result of the above formula exceeds 9998.

To display the machine speed set Pr. 37 to the reference value for the speed to be shown at 60Hz. For example, if the speed is 55m/min at 60Hz set Pr. 37 to "55". The display will then show "55" when the motor frequency is 60Hz.

Pr. 37	Output Frequency Monitor	Set Frequency Monitor	Frequency Setting	Parameter Setting
0 (initial value)	Hz	Hz	Hz	Hz
0.01–9998	Machine speed ①	Machine speed ①	Machine speed ①	

Tab. 6-18: *Setting range of parameter 37*

① Machine speed conversion formula: Pr. 37 × frequency/60Hz

② Hz is displayed in 0.01Hz increments and machine speed is in 0.001.

NOTES

Under V/f control, the output frequency of the inverter is displayed in terms of synchronous speed, and therefore, displayed value = actual speed + motor slip. The display changes to the actual speed (estimated value calculated based on the motor slip) when slip compensation was made valid.

Refer to Pr. 52 when you want to change the PU main monitor (PU main display).

Since the panel display of the operation panel is 4 digits in length, the monitor value of more than "9999" is displayed "----".

When the machine speed is displayed on the FR-PU04/FR-PU07, do not change the speed by using an up/down key in the state where the set speed exceeding 65535 is displayed. The set speed may become arbitrary value.

While the machine speed is displayed on the monitor, values of other parameters related to speed (Pr. 1, etc.) are in frequency increments. Set other parameters (Pr. 1, etc) related to speed in increments of frequency.

Due to the limitations on the resolution of the set frequency, the indication in the second decimal place may differ from the setting.

CAUTION:

Make sure that the running speed setting is correct. Otherwise, the motor might run at extremely high speed, damaging the machine.

6.10.2 Monitor display selection of DU/PU and terminal AM (Pr. 52, Pr. 158, Pr. 170, Pr. 171, Pr. 268, Pr. 563, Pr. 564, Pr. 891)

The monitor to be displayed on the main screen of the control panel and parameter unit (FR-PU04/FR-PU07) can be selected.

In addition, signal to be output from the terminal AM (analog voltage output) can be selected.

Pr. No.	Name	Initial Value	Setting Range	Description
52	DU/PU main display data selection ①	0 (output frequency)	0/5/8–12/14/20/23–25/52–55/61/62/64/100	Select the monitor to be displayed on the operation panel and parameter unit. Refer to Tab. 6-19 for monitor description.
158	AM terminal function selection ①	1 (output frequency)	1–3/5/8–12/14/21/24/52/53/61/62	Select the monitor output to terminal AM.
170	Watt-hour meter clear	9999	0	Set "0" to clear the watt-hour meter monitor.
			10	Set the maximum value when monitoring from communication to 0 to 9999kWh.
			9999	Set the maximum value when monitoring from communication to 0 to 65535kWh.
171	Operation hour meter clear	9999	0/9999	Set "0" in the parameter to clear the watt-hour monitor. Setting "9999" has no effect.
268	Monitor decimal digits selection ①	9999	0	Displays as integral value.
			1	Displayed in 0.1 increments.
			9999	No function
563	Energizing time carrying-over times	0	0–65535 (reading only)	The numbers of cumulative energizing time monitor exceeded 65535h is displayed. Reading only
564	Operating time carrying-over times	0	0–65535 (reading only)	The numbers of operation time monitor exceeded 65535h is displayed. Reading only
891	Cumulative power monitor digit shifted times	9999	0–4	Set the number of times to shift the cumulative power monitor digit. Clamp the monitoring value at maximum.
			9999	No shift Clear the monitor value when it exceeds the maximum value.

Parameters referred to		Refer to Section
30	Regenerative function selection	6.8.2
70	Special regenerative brake duty	6.8.2
37	Speed display	6.10.1
55	Frequency monitoring reference	6.10.3
56	Current monitoring reference	6.10.3

The above parameters can be set when Pr. 160 = 0.

① The above parameters allow its setting to be changed during operation in any operation mode even if "0" (initial value) is set in Pr. 77 "Parameter write selection".

Monitor description list (Pr. 52)

- Set the monitor to be displayed on the operation panel and parameter unit (FR-PU04/ FR-PU07) in Pr. 52.
- Set the monitor to be output to the terminal AM (analog output (0 to 10V DC voltage output)) in Pr. 158 "AM terminal function selection".

Types of Monitor	Unit	Pr. 52		Pr. 158 (AM)	Terminal AM Full Scale Value		Description
		Operation panel	PU Main Monitor			Unit	
Output frequency	0.01Hz	0/100		1	Pr. 55		Displays the inverter output frequency.
Output current	0.01A/0.1A	0/100		2	Pr. 56		Displays the inverter output current effective value.
Output voltage	0.1V	0/100		3	200V class	400V	Displays the inverter output voltage.
					400V class	800V	
Alarm display	—	0/100		—	—		Displays 8 past alarms individually.
Frequency setting	0.01Hz	5	①	5	Pr. 55		Displays the set frequency.
Converter output voltage	0.1V	8	①	8	200V class	400V	Displays the DC bus voltage value.
					400V class	800V	
Regenerative brake duty	0.1%	9	①	9	Pr. 70		Brake duty set in Pr. 30, Pr. 70
Electronic thermal relay function load factor	0.1%	10	①	10	100%		Displays the motor thermal cumulative value on the assumption that the thermal operation level is 100%. ⑥
Output current peak value	0.01A	11	①	11	Pr. 56		Holds and displays the peak value of the output power monitor. (Cleared at every start)
Converter output voltage peak value	0.1V	12	①	12	200V class	400V	Holds and displays the peak value of the DC bus voltage value. (Cleared at every start)
					400V class	800V	
Output power	0.01kW	14	①	14	Rated inverter power × 2		Displays the power on the inverter output side
Input terminal status	—	—	①	—	—		Displays the input terminal ON/OFF status on the operation panel. (Refer to page 6-116)
Output terminal status	—		①	—	—		Displays the output terminal ON/OFF status on the operation panel. (Refer to page 6-116)
Cumulative energization time ②	1h	20		—	—		Adds up and displays the energization time after inverter shipment. You can check the numbers of the monitor value exceeded 65535h with Pr. 563.
Reference voltage output	—	—		21	—		Terminal AM: Output 10V

Tab. 6-19: *Monitor description list (1)*

Types of Monitor	Unit	Pr. 52		Pr. 158 (AM)	Terminal AM Full Scale Value	Description
		Operation panel	PU Main Monitor			
Actual operation time ②③	1h	23		—	—	Adds up and displays the inverter operation time. You can check the numbers of the monitor value exceeded 65535h with Pr. 564. Can be cleared by Pr. 171. (Refer to page 6-116.)
Motor load factor	0.1%	24		24	200%	Displays the output current value on the assumption that the inverter rated current value is 100%. Monitor value = output power monitor value/rated inverter current × 100 [%]
Cumulative power ⑤	0.01kWh ④	25		—	—	Adds up and displays the power amount based on the output power monitor. Can be cleared by Pr. 170. (Refer to page 6-116.)
PID set point	0.1%	52		52	100%	Display the set point, measured value and deviation during PID control. (Refer to page 6-242 for details.)
PID measured value	0.1%	53		53	100%	
PID deviation value	0.1%	54		—	—	
Inverter I/O terminal monitor	—	55	—	—	—	Displays the ON/OFF status of the inverter input terminal and output terminal on the PU (Refer to page 6-116 for display on the operation panel.)
Motor thermal load factor	0.1%	61		61	Thermal relay operation level (100%)	Motor thermal heat cumulative value is displayed. (Motor overload trip (E.THM) at 100%)
Inverter thermal load factor	0.1%	62		62	Thermal relay operation level (100%)	Transistor thermal heat cumulative value is displayed. (Inverter overload trip (E.THT) at 100%)
PTC thermistor resistance	0.01kΩ	64		—	—	Displays the PTC thermistor resistance at terminal 2 when PTC thermistor protection is active. (0.10kΩ to 31.5kΩ) (refer to page 6-71)

Tab. 6-19: *Monitor description list (2)*

① Frequency setting to output terminal status on the PU main monitor are selected by "other monitor selection" of the parameter unit (FR-PU04/FR-PU07).

② The cumulative energization time and actual operation time are accumulated from 0 to 65535 hours, then cleared, and accumulated again from 0.When the operation panel is used, the time is displayed up to 65.53 (65530h) on the assumption that 1h = 0.001, and thereafter, it is added up from 0.

③ Actual operation time is not accumulated when the cumulative operation time is less than 1h until turning off of the power supply.

④ When using the parameter unit (FR-PU04/FR-PU07), "kW" is displayed.

⑤ Since the panel display of the operation panel is 4 digits in length, the monitor value of more than "9999" is displayed "----".

⑥ Larger thermal value between the motor thermal and transistor thermal is displayed. A value other than 0% is displayed if the ambient temperature (heatsink temperature) is high even when the inverter is at a stop.

NOTES

By setting "0" in Pr. 52, the monitoring of output speed to alarm display can be selected in sequence by the SET key.

When the operation panel is used, the displayed units are Hz and A only and the others are not displayed.

The monitor set in Pr. 52 is displayed in the third monitor position. However, change the output current monitor for the motor load factor.

The monitor displayed at powering on is the first monitor. Display the monitor to be displayed on the first monitor and press the SET key for 1s. (To return to the output frequency monitor, hold down the SET key for 1s after displaying the output frequency monitor.)

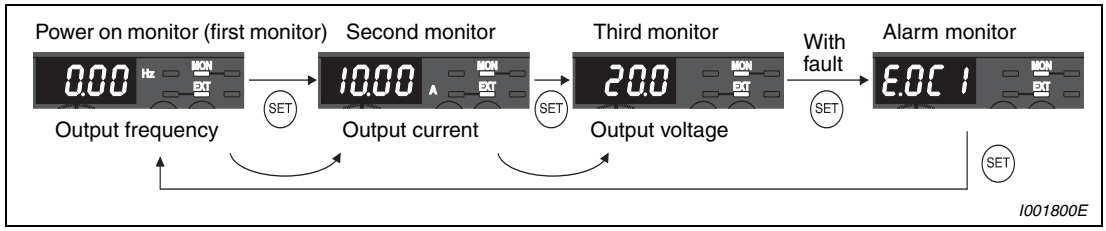

Fig. 6-60: *Displaying various types of monitor*

Example ▽

When Pr. 52 is set to "20" (cumulative energizing time), the monitor is displayed on the operation panel as described below.

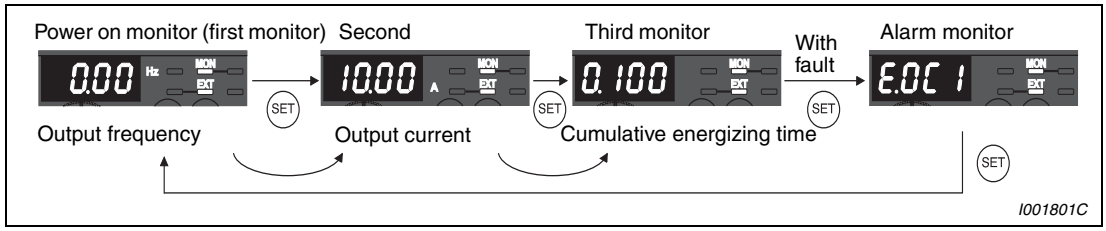

Fig. 6-61: *Selection of the third monitor*

△

Display set frequency during stop (Pr. 52)

When "100" is set in Pr. 52, the set frequency and output frequency are displayed during stop and operation respectively. LED of Hz flickers during stop and is lit during operation.

	Parameter 52		
	0	100	
	During running/stop	During stop	During running
Output frequency	Output frequency	Set frequency ①	Output frequency
Output current	Output current		
Output voltage	Output voltage		
Alarm display	Alarm display		

Tab. 6-20: *Display during running and stop*

① The set frequency displayed indicates the frequency to be output when the start command is on. Different from the frequency setting displayed when Pr. 52 = "5", the value based on maximum/minimum frequency and frequency jump is displayed.

NOTES

During an error, the output frequency at error occurrence appears.

During MRS, the values displayed are the same as during a stop.

During offline auto tuning, the tuning status monitor has priority.

Operation panel I/O terminal monitor

When Pr. 52 is set to "55", the I/O terminal states can be monitored on the operation panel.

The I/O terminal monitor is displayed on the third monitor.

The LED is on when the terminal is on, and the LED is off when the terminal is off. The centre line of LED is always on.

On the unit I/O terminal monitor (Pr. 52 = "55"), the upper LEDs denote the input terminal states and the lower the output terminal states.

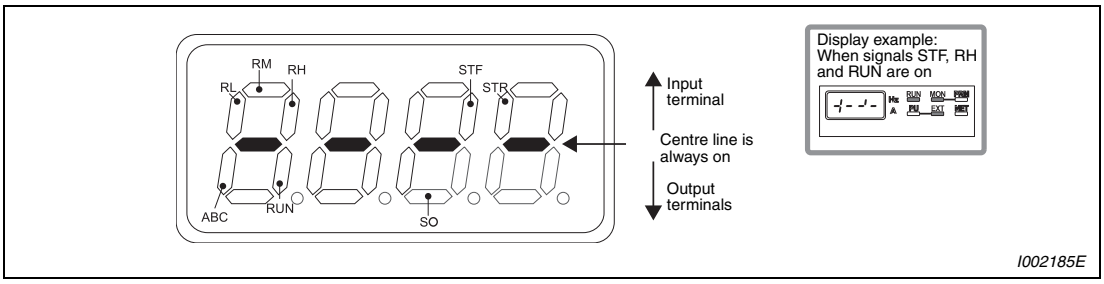

Fig. 6-62: *Displaying the signal states of the I/O terminals*

Cumulative energizing power monitor and clear (Pr. 170, Pr. 891)

On the cumulative power monitor (Pr. 52 = "25"), the output power monitor value is added up and is updated in 1h increments. The operation panel, parameter unit (FR-PU04/FR-PU07) and communication (RS485 communication) display increments and display ranges are as indicated below:

Operation Panel ①		FR-PU04/FR-PU07 ②		Communication		
Range	Unit	Range	Unit	Range		Unit
				Pr. 170 = 10	Pr. 170 = 9999	
0–99.99kWh	0.01kWh	0–999.99kWh	0.01kWh	0–9999kWh	0–65535kWh (initial value)	1 kWh/ 0.01 kWh ③
100–999.9kWh	0.1kWh	1000–9999.9kWh	0.1kWh			
1000–9999kWh	1kWh	10000–99999kWh	1kWh			

Tab. 6-21: *Units and range of the cumulative energizing monitor*

① Power is measured in the range 0 to 9999.99kWh, and displayed in 4 digits.
When the monitor value exceeds "99.99", a carry occurs, e.g. "100.0", so the value is displayed in 0.1kWh increments.

② Power is measured in the range 0 to 99999.99kWh, and displayed in 5 digits.
When the monitor value exceeds "999.99", a carry occurs, e.g. "1000.0", so the value is displayed in 0.1kWh increments.

③ In monitoring with communication, cumulative power is displayed in 1kWh increments. And cumulative power 2 is displayed in 0.01kWh. (For details to communication refer to section 6.18.5.)

The monitor data digit can be shifted to the right by the number of Pr. 891 settings. For example, if the cumulative power value is 1278.56kWh when Pr. 891 = "2", the operation panel display or parameter unit (FR-PU04/FR-PU07) display is 12.78 (display in 100kWh increments) and the communication data is 12.

If the maximum value is exceeded at Pr. 891 = "0 to 4", the power is clamped at the maximum value, indicating that a digit shift is necessary. If the maximum value is exceeded at Pr. 891 = "9999", the power returns to 0 and is recounted. If the maximum value is exceeded at Pr. 891 = "9999", the power returns to 0 and is recounted.

Writing "0" to Pr. 170 clears the cumulative energizing power monitor.

NOTE If "0" is written to Pr. 170 and Pr. 170 is read again, "9999" or "10" is displayed.

Cumulative energizing time and actual operation time monitor (Pr. 171, Pr. 563, Pr. 564)

Cumulative energization time monitor (Pr. 52 = "20") accumulates energization time from shipment of the inverter every one hour.

On the actual operation time monitor (Pr. 52 = "23"), the inverter running time is added up every hour. (Time is not added up during a stop.)

If the monitored value exceeds 65535, it is added up from 0. You can check the numbers of cumulative energization time monitor exceeded 65535h with Pr. 563 and the numbers of actual operation time monitor exceeded 65535h with Pr. 564.

Writing "0" to Pr. 171 clears the cumulative energization power monitor. The cumulative time monitor can not be cleared.

NOTES

The cumulative energization time does not increase if the power is ON for less than an hour.

The actual operation time does not increase if the cumulative running time during power-ON status is less than an hour.

If "0" is written to Pr. 171 and Pr. 171 is read again, "9999" is always displayed. Setting "9999" does not clear the actual operation time meter.

You can select the decimal digits of the monitor (Pr. 268)

As the operation panel display is 4 digits long, the decimal places may vary at analog input, etc. The decimal places can be hidden by selecting the decimal digits. In such a case, the decimal digits can be selected by Pr. 268.

Pr. 268	Description
9999 (initial value)	No function
0	For the first or second decimal places (0.1 increments or 0.01 increments) of the monitor, numbers in the first decimal place and smaller are rounded to display an integral value (1 increments). The monitor value smaller than 0.99 is displayed as 0.
1	When 2 decimal places (0.01 increments) are monitored, the 0.01 decimal place is dropped and the monitor displays the first decimal place (0.1 increments). The monitored digits in 1 increments are displayed as they are.

Tab. 6-22: *Selection of decimal digits*

NOTE

The number of display digits on the cumulative energization time (Pr. 52 = "20"), actual operation time (Pr. 52 = "23") and cumulative power (Pr. 52 = "25") does not change.

6.10.3 Reference of the terminal AM (analog voltage output) (Pr. 55, Pr. 56)

Analog voltage output from the terminal AM is available. Set the reference of the signal output from terminal AM.

Pr. No.	Name	Initial Value	Setting Range	Description
55	Frequency monitoring reference ①	50Hz	0–400Hz	Full-scale value to output the output frequency monitor value to terminal AM.
56	Current monitoring reference ①	Rated inverter output current	0–500A	Full-scale value to output the output current monitor value to terminal AM.

Parameters referred to	Refer to Section
158 AM terminal function selection	6.10.2

The above parameters can be set when Pr. 160 = 0.

① The above parameters allow its setting to be changed during operation in any operation mode even if "0" (initial value) is set in Pr. 77 "Parameter write selection".

Frequency monitoring reference (Pr. 55)

Set the frequency to be referenced when the frequency monitor (output frequency/set frequency) is selected for the terminal AM display. Set the full scale value when outputting the frequency monitor from terminal AM.

- Set the frequency (output frequency/set frequency) when the voltage output at terminal AM is 10V DC. The analog voltage output and frequency at terminal AM are proportional. (The maximum output voltage is 10V DC.).

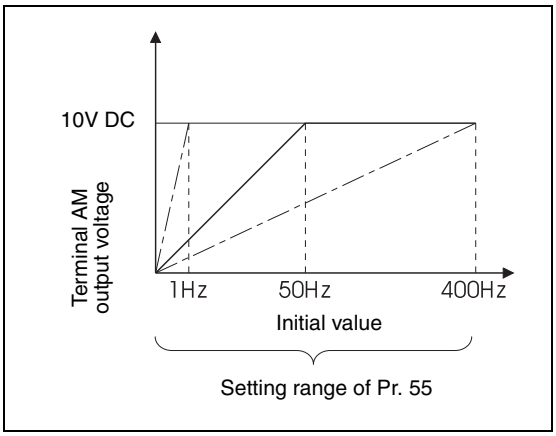

Fig. 6-63:
Frequency monitoring reference

I001164E

Current monitoring reference (Pr. 56)

Set the current to be referenced when the current monitor (inverter output current, etc.) is selected for terminal AM display. Set the full scale value when outputting the current monitor from terminal AM.

- Set the current value when the voltage output at terminal AM is 10V DC. The analog voltage output and current value at terminal AM are proportional. (The maximum output voltage is 10V DC.)

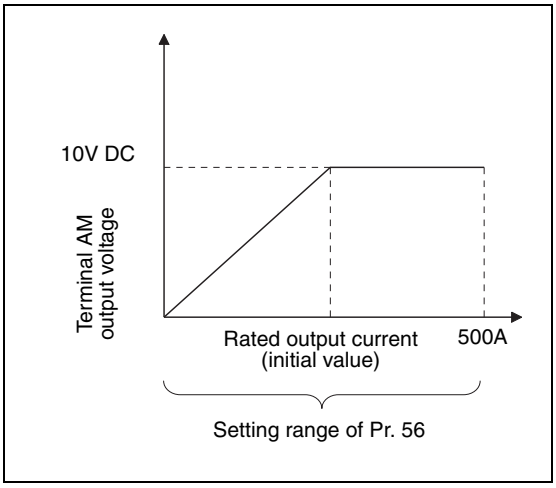

Fig. 6-64:
Current monitoring reference

6.10.4 Terminal AM calibration [C1 (Pr.901)]

By using the operation panel or parameter unit, you can calibrate terminal AM to full scale deflection.

Pr. No.	Name	Initial Value	Setting Range	Description
C1 (901)	AM terminal calibration	—	—	Calibrates the scale of the meter connected to terminal AM.

Parameters referred to		Refer to Section
55	Frequency monitoring reference	6.10.3
56	Current monitoring reference	6.10.3
158	AM terminal function selection	6.10.3

The above parameter can be set when Pr. 160 = 0.

The parameter number in parentheses is the one for use with the operation panel (FR-PA02) for the FR-E500 series or parameter unit (FR-PU04/FR-PU07).

The above parameters allow its setting to be changed during operation in any operation mode even if "0" (initial value) is set in Pr. 77 "Parameter write selection".

Terminal AM gain calibration [C1 (Pr. 901)]

Terminal AM is factory-set to provide a 10V DC output in the full-scale status of the corresponding monitor item. Calibration parameter C1 (Pr. 901) allows the output voltage ratios (gains) to be adjusted according to the meter scale. Note that the maximum output voltage is 10V DC, the maximum output current 1mA.

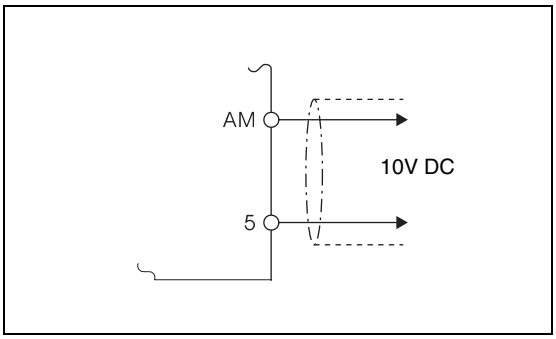

Fig. 6-65:
Connecting an analog meter to the AM output

I001168C

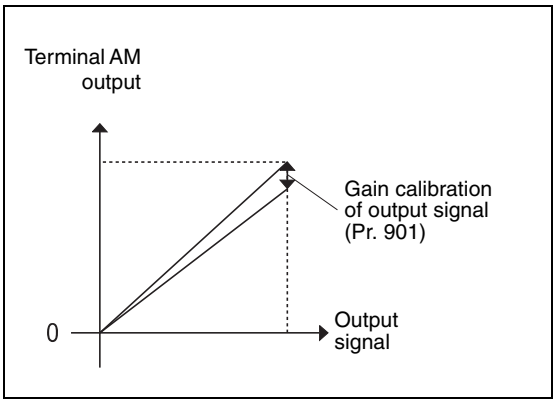

Fig. 6-66:
Terminal AM gain calibration

I001932E

Calibrate the terminal AM gain in the following procedure:

① Connect an 0–10V DC voltmeter to inverter terminals AM and 5, taking care to correct with the correct polarity. AM is positive.

② Set Pr. 158 to select the monitor signal you want to output to analog output AM (refer to page 6-118). To display the output frequency or the output current set Pr. 55 or Pr. 56, respectively, to the maximum frequency or current value for which you want to output 10V to the terminal.

③ Start the frequency inverter in PU mode with the operation panel or the control terminals (external operation).

④ Calibrate the full deflection of the meter by setting C1 (Pr. 901) and then operating the digital dial. Note that the value shown on the operating panel for the monitor signal associated with C1 does not change when you turn the digital dial, but the analog voltage output to AM will change as you turn the dial. Confirm the calibration value found by pressing the SET key (this assigns the maximum voltage output to the displayed value of the monitor signal.)

NOTE

If it is not possible output the signal to be measured for calibration at its maximum value you can set Pr. 158 to "21". This outputs a continuous signal of approx. 10V to terminal AM, which makes it possible to calibrate the maximum value on the meter. When C1 is used to calibrate the full meter deflection in this mode a value of "1000" is displayed. Afterwards you can then reset Pr. 158 to the required monitor signal setting.

How to calibrate the terminal AM when using the operation panel

The following example shows how to calibrate the maximum value of the AM terminal to the 50Hz output frequency. This operation is performed in PU mode.

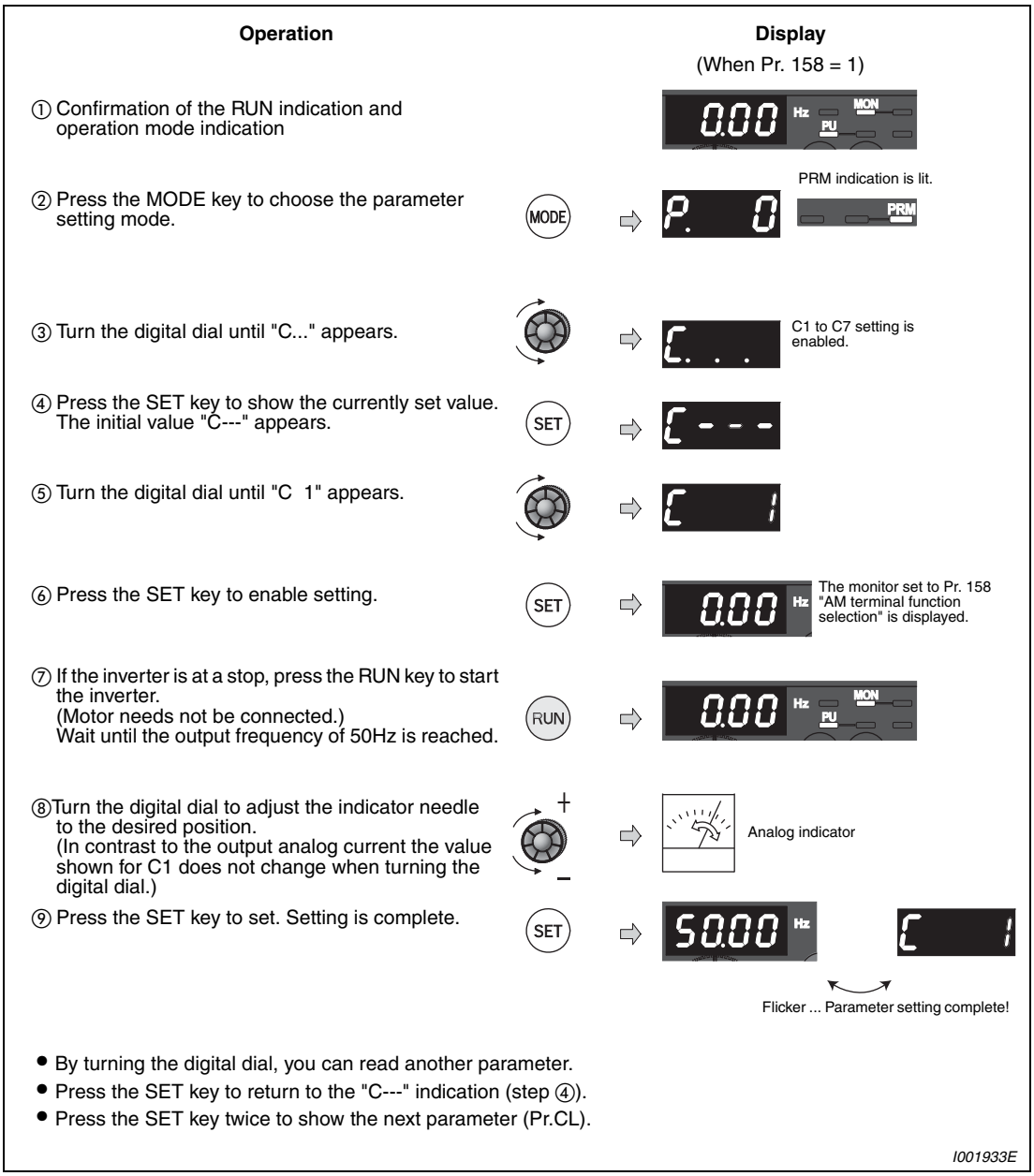

Fig. 6-67: *AM terminal calibration*

NOTES

Calibration can also be made for external operation. Set the frequency in external operation mode, and make calibration in the above procedure.

Calibration can be made even during operation.

For the operation procedure using the parameter unit (FR-PU04/FR-PU07), refer to the parameter unit instruction manual.

6.11 Operation selection at power failure

Purpose	Parameters that must be set		Refer to Section
At instantaneous power failure occurrence, restart inverter without stopping motor.	Automatic restart operation after instantaneous power failure/flying start	Pr. 30, Pr. 57, Pr. 58, Pr. 96, Pr. 162, Pr. 165, Pr. 298, Pr. 299, Pr. 611	6.11.1
When under voltage or a power failure occurs, the inverter can be decelerated to a stop.	Power failure-time deceleration-to-stop function	Pr. 261	6.11.2

6.11.1 Automatic restart (Pr. 30, Pr. 57, Pr. 58, Pr. 96, Pr. 162, Pr. 165, Pr. 298, Pr. 299, Pr. 611)

You can restart the inverter without stopping the motor in the following cases.

- when power comes back on after an instantaneous power failure
- when motor is coasting at start

Pr. No.	Name	Initial Value	Setting Range	Description
30	Regenerative function selection	0	0/1	The motor starts at the starting frequency when MRS (X10) turns on then off.
			2	Restart operation is performed when MRS (X10) turns on then off
57	Restart coasting time	9999	0	FR-D720S-070SC or less, FR-D740-036SC or less ..... 1 s FR-D720S-100SC or less, FR-D740-050SC or more ..... 2 s
			0.1–5s	Set the waiting time for inverter-triggered restart after an instantaneous power failure.
			9999	No restart
58	Restart cushion time	1s	0–60s	Set a voltage starting time at restart.
96	Auto tuning setting/ status	0	0	Offline auto tuning is not performed
			11	For general-purpose magnetic flux vector control Offline auto tuning is performed without motor running (motor constants (R1) only) (Refer to section 6.2.2.)
			21	Offline auto tuning (tuning performed without motor running) for V/f control and automatic restart after instantaneous power failure (with frequency search)
162	Automatic restart after instantaneous power failure selection	0	0	With frequency search
			1	No frequency search: The output voltage is increased until the preset frequency is reached, irrespective of the current motor speed.
			10	Frequency search at every start
			11	On every start the output voltage is increased until the preset frequency reached, irrespective of the current motor speed.
165	Stall prevention operation level for restart	150%	0–200%	Consider the rated inverter current according to the overload capacity as 100% and set the stall prevention operation level during restart operation.
298	Frequency search gain	9999	0–32767	When offline auto tuning is performed under V/f control, frequency search gain necessary for frequency search for automatic restart after instantaneous power failure is set as well as the motor constants (R1).
			9999	Uses the Mitsubishi motor (SF-JR, SF-HR, SF-JRCA, SF-HRCA) constants
299	Rotation direction detection selection at restarting	0	0	Without rotation direction detection
			1	With rotation direction detection
			9999	When Pr. 78 = "0", the rotation direction is detected. When Pr. 78 = "1","2", the rotation direction is not detected.
611	Acceleration time at a restart	9999	0–3600s	Acceleration time to reach the acceleration time reference frequency at a restart.
			9999	Acceleration time for restart is the normal acceleration time (e.g. Pr. 7)

Parameters referred to		Refer to Section
7	Acceleration time	6.6.1
13	Starting frequency	6.6.2
65	Retry selection	6.12.1
67–69	Retry function	6.12.1
71	Applied motor	6.7.2
78	Reverse rotation prevention selection	6.16.3
178–182	Input terminal function selection	6.9.1

The above parameters can be set when Pr. 160 = 0.

Automatic restart after instantaneous power failure operation (Pr. 30, Pr. 162, Pr. 299)

- Without frequency search
  When Pr. 162 = "1" (initial value) or "11", automatic restart operation is performed in a reduced voltage system, where the voltage is gradually risen with the output frequency unchanged from prior to an instantaneous power failure independently of the coasting speed of the motor.

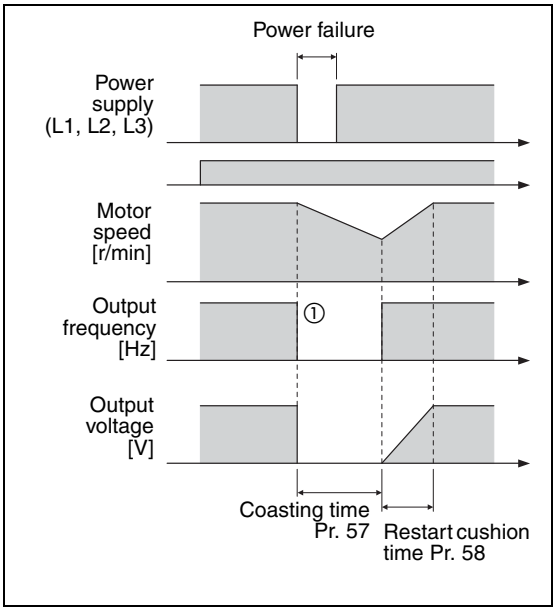

Fig. 6-68:
Automatic restart without frequency search (Pr. 162 = 1/11)

① The output shut off timing differs according to the load condition.

NOTE

This system stores the output frequency and rotation direction prior to an instantaneous power failure and restart using the stored value. Therefore, if the instantaneous power failure time exceeds 0.2s and the stored value cannot be retained, the inverter starts at Pr. 13 "Starting frequency" (initial value = 0.5Hz) in the starting direction upon power restoration.

- With frequency search
  When "0 (initial value) or 10" is set in Pr. 162, the inverter smoothly starts after detecting the motor speed upon power restoration. (The motor capacity should be equal to or one rank lower than the inverter capacity.)
  When using the frequency search, perform offline autotuning. (Refer to page 6-74 for general-purpose magnetic flux vector control and page 6-129 for V/f control.)
  During reverse rotation, the inverter can be restarted smoothly as the direction of rotation is detected. You can select whether to make rotation direction detection or not with Pr. 299 "Rotation direction detection selection at restarting". When capacities of the motor and inverter differ, set "0" (without rotation direction detection) in Pr. 299.

Pr. 299 Setting	Pr. 78 Setting		
	0	1	2
9999	With rotation direction detection	Without rotation direction detection	Without rotation direction detection
0 (Initial value)	Without rotation direction detection	Without rotation direction detection	Without rotation direction detection
1	With rotation direction detection	With rotation direction detection	With rotation direction detection

Tab. 6-23: *Rotation direction direction*

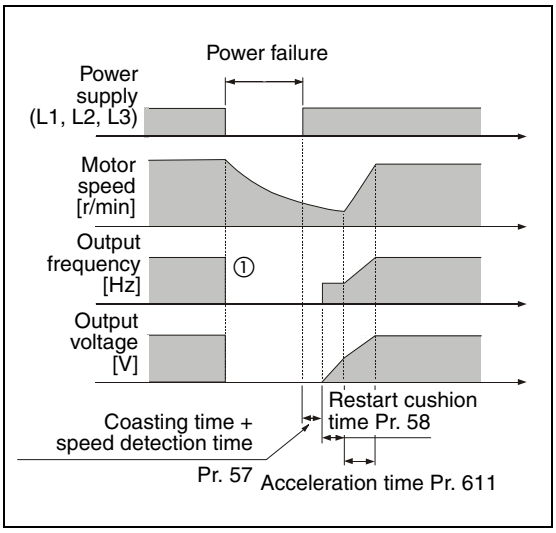

Fig. 6-69:
Automatic restart with frequency search (Pr. 162 = 0/10)

① The output shut off timing differs according to the load condition.

NOTES

Speed detection time (frequency search) changes according to the motor speed (maximum 100ms).

Frequency search errors can occur if the output capacity of the frequency inverter is one or more classes higher than that of the motor or if the motor is a special model (e.g. with a frequency rating above 60Hz). If this happens it is possible for overcurrent error messages (OCT) to be generated during motor acceleration. In such configurations flying restarts are not possible and the frequency search function should not be used.

At motor frequencies of 10Hz or less the inverter accelerates from 0Hz to the set frequency.

If more than one motor is connected to the inverter in parallel the frequency search on automatic restart does not work correctly and overcurrent error messages (OCT) are likely. In such configurations deactivate frequency search (set Pr. 162 to "1" or "11").

When reverse rotation is detected when Pr. 78 = 1 (reverse rotation disabled), the rotation direction is changed to forward rotation after decelerates in reverse rotation when the start command is forward rotation. The inverter will not start when the start command is reverse rotation.

When automatic restart operation after instantaneous power failure is activated while the motor is running at a low speed (less than 10Hz), the motor restarts in the direction prior to instantaneous power failure without detecting the rotation direction (Pr. 299 "Rotation direction detection selection at restarting" = 1).

If the frequency search result exceeds the set frequency, the output frequency is limited at the set frequency.

When using the automatic restart after instantaneous power failure function with wiring length exceeding below, select without frequency search (Pr. 162 = "1", "11").

Motor capacity	**0.1K**	**0.2K**	**≥ 0.4K**
Wiring length	20 m	50 m	100 m

- Restart operation at every start
  When Pr. 162 = "10" or "11", automatic restart operation is also performed every start, in addition to the automatic restart after instantaneous power failure. When Pr. 162 = "0", automatic restart operation is performed at the first start after power supply-on, but not performed at the second time or later.

- Automatic restart operation selection of MRS (X10) signal (Pr. 162 = 0 or 1)
  Restart operation after turning MRS (X10) signal on then off using Pr. 30 can be selected as in the table below. When automatic restart after instantaneous power failure is selected when using the high power factor converter (FR-HC), normally set "2" in Pr. 30.

Pr. 30	Operation after MRS and X10 Signal turns off, on, then off
0/1	Start at the Pr. 13 "Starting frequency".
2	Frequency search is made and starts at the coasting speed.

NOTE

When output is shut off using terminal S1 and S2 in the safety stop function model, the inverter restarts in the same way as when output is shut off by MRS (X10) signal.

Restart coasting time (Pr. 57)

Coasting time is the time from when the motor speed is detected until automatic restart control is started.
Set Pr. 57 to "0" to perform automatic restart operation.
The coasting time is automatically set to the value below. Generally this setting will pose no problems.
FR-D720S-070SC or less, FR-D740-036SC or less ..... 1 s
FR-D720S-100SC, FR-D740-050SC or more ..... 2 s

Operation may not be performed well depending on the magnitude of the moment of inertia (J) of the load or running frequency. Adjust the coasting time between 0.1s and 5s according to the load specifications.

Restart cushion time (Pr. 58)

Cushion time is the length of time when the voltage appropriate to the voltage at the detected motor speed (output frequency prior to instantaneous power failure when Pr. 162 = 1 or 11) from 0V.

Normally the initial value need not be changed for operation, but adjust it according to the magnitude of the moment of inertia (J) of the load or torque.

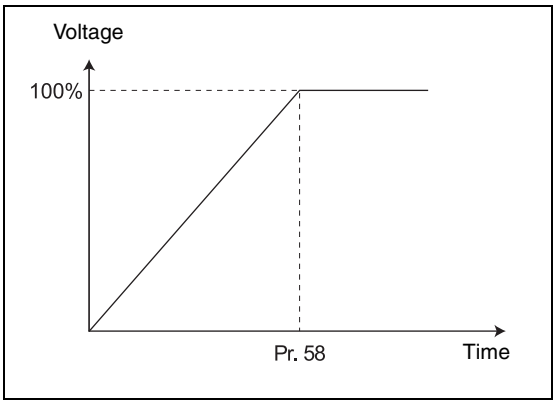

Fig. 6-70:
Voltage rise at automatic restart

I001170E

Automatic restart operation adjustment (Pr. 165, Pr. 611)

Using Pr. 165, you can set the stall prevention operation level at a restart.
Using Pr. 611, you can set the acceleration time until the set frequency (Pr. 20) is reached after automatic restart operation is performed besides the normal acceleration time.

Frequency search gain (Pr. 298), offline auto tuning (Pr. 96)

When automatic restart after instantaneous power failure operation (with frequency search) is valid at V/f control, perform offline auto tuning. Perform offline auto tuning during V/f control in the following order to set Pr. 298 "Frequency search gain" automatically. (Refer to page 6-74 for general-purpose magnetic flux vector control.)

Before performing offline auto tuning

Check the following before performing offline auto tuning:

- The inverter is under V/f control.
- A motor should be connected. Note that the motor should be at a stop at a tuning start.
- The motor capacity should be equal to or one rank lower than the inverter capacity. (The capacity should be 0.1kW or more.)
- A high-slip motor, high-speed motor and special motor cannot be tuned. (The maximum frequency is 120Hz.)
- The motor may run slightly. Therefore, fix the motor securely with a mechanical brake, or before tuning, make sure that there will be no problem in safety if the motor runs (caution is required especially in vertical lift applications). Note that tuning performance is unaffected even if the motor runs slightly.
- Offline auto tuning will not be performed properly if it is performed with a surge voltage suppression filter (FFR-DT or FFR-SI) connected between the inverter and motor. Remove it before starting tuning.

Setting

- Set "21" in Pr. 96 "Auto tuning setting/status". Tuning is performed without motor running.
- Set the rated motor current (initial value is rated inverter current) in Pr. 9 "Electronic thermal O/L relay". (Refer to section 6.7).
- Set Pr. 71according to the motor used.

Motor		Pr. 71 ①
Mitsubishi standard motor, Mitsubishi high efficiency motor	SF-JR	3
	SF-JR 4P-1.5kW or less	23
	SF-HR	43
	Others	3
Mitsubishi constant-torque motor	SF-JRCA 4P	13
	SF-HRCA	53
	Others (SF-JRC, etc.)	13
Other manufacturer's standard motor	—	3
Other manufacturer's constant torque motor	—	13

Tab. 6-24: *Motor selection*

① Refer to section for other settings of Pr. 71.

Execution of tuning

CAUTION:

Before performing tuning, check the monitor display of the operation panel or parameter unit (FR-PU04/FR-PU07) if the inverter is in the status for tuning. (Refer to Tab. 6-9).

When performing tuning or PU operation, press the RUN key of the operation panel.

Start the tuning in external operating mode by connecting the STF or STR terminal with the PC terminal (positive logic) or the SD terminal (negative logic). (Excitation noise is produced during tuning.)

NOTES

To force tuning to end, use the MRS or RES signal or press the STOP key of the operation panel. (Turning the start signal (STF signal or STR signal) off also ends tuning.)

During offline auto tuning, only the following I/O signals are valid:
– Input terminal:
  STF, STR
– Output terminal:
  RUN, SO, AM, A, B, C
Note that the progress status of offline auto tuning is output from AM when speed and output frequency are selected.

Since the RUN signal turns on when tuning is started, caution is required especially when a sequence which releases a mechanical brake by the RUN signal has been designed.

When executing offline auto tuning, input the run command after switching on the main circuit power (R/L1, S/L2, T/L3) of the inverter.

Do not perform ON/OFF switching of the second function selection signal (RT) during execution of offline auto tuning. Auto tuning is not excecuted properly.

Monitor display during auto tuning

Monitor is displayed on the operation panel and parameter unit (FR-PU04/FR-PU07) during tuning as below. The value displayed corresponds to the value of parameter 96.

	Parameter Unit (FR-PU04/FR-PU07) Display	Operation Panel Indication
Pr. 96	21	21
Setting	READ:List 21 ---STOP PU	21 MON EXT
Tuning in progress	TUNE 22 STF FWD PU	22 RUN MON EXT
Normal end	TUNE 23 COMPLETION STF STOP PU	Flickering 23 RUN MON EXT
Error end (when inverter protective function operation is activated)	TUNE ERROR 9 STF STOP PU	9 RUN MON EXT

Tab. 6-25: *Monitor display*

Return to the normal operation mode

When offline auto tuning ends, following operation resets the offline auto tuning and the PU's monitor display returns to the normal indication:

– during PU operation: press the STOP/RESET key

– For external operation, turn off the start signal (STF signal or STR signal) once.

If offline auto tuning ended in error (see the table below), frequency search gain are not set. Perform an inverter reset and restart tuning.

Error Display	Error Cause	Remedy
8	Force end	Set "21" in Pr. 96 and perform tuning again.
9	Inverter protective function operation	Make setting again.
91	Current limit (stall prevention) function was activated.	Set "1" in Pr. 156.
92	Converter output voltage reached 75% of rated value.	Check for fluctuation of power supply voltage.
93	– Calculation error – A motor is not connected.	Check the motor wiring and make setting again. Set the rated current of the motor in Pr. 9.

Tab. 6-26: *Value of Parameter 96*

When tuning is ended forcibly by pressing the STOP-key or turning off the start signal (STF or STR) during tuning, offline auto tuning does not end properly. (The frequency search gain have not been set.) Perform an inverter reset and restart tuning.

When using the motor corresponding to the following specifications and conditions, reset Pr.9 "Electronic thermal O/L relay" as below after tuning is completed.

- When the rated power specifications of the motor is 200/220V (400/440V) 60Hz, set 1.1 times rated motor current value in Pr. 9.
- When performing motor protection from overheat using a PTC thermistor or motor with temperature detector such as Klixon, set "0" (motor overheat protection by the inverter is invalid) in Pr. 9.

NOTES

The motor constants measured once in the offline auto tuning are stored as parameters and their data are held until the offline auto tuning is performed again.

An instantaneous power failure occurring during tuning will result in a tuning error. After power is restored, the inverter goes into the normal operation mode. Therefore, when STF (STR) signal is on, the motor runs in the forward (reverse) rotation.

Any alarm occurring during tuning is handled as in the ordinary mode. Note that if an error retry has been set, retry is ignored.

The set frequency monitor displayed during the offline auto tuning is 0Hz.

Changing the terminal assignment using Pr. 178 to Pr. 182 may affect the other functions. Make setting after confirming the function of each terminal.

The SU and FU signals are not output during a restart. They are output after the restart cushion time has elapsed.

Automatic restart operation will also be performed after a reset or when a retry is made by the retry function.

CAUTION:

Before activating the automatic restart after power failure function please make sure that this mode is supported for the drive and permitted for your configuration.

When automatic restart after instantaneous power failure has been selected, the motor and machine will start suddenly (after the reset time has elapsed) after occurrence of an instantaneous power failure. Stay away from the motor and machine. When you have selected automatic restart after instantaneous power failure function, apply CAUTION stickers in easily visible places.

When the start signal is turned off or is pressed during the restart cushion time after instantaneous power failure, deceleration starts after Pr. 58 "Restart cushion time" has elapsed.

6.11.2 Power failure-time deceleration-to-stop function (Pr. 261)

When a power failure or under voltage occurs, the inverter can be decelerated to a stop or can be decelerated and re-accelerated to the set frequency.

Pr. No.	Name	Initial Value	Setting Range	Description
261	Power failure stop selection	0	0	Coasting to stop when under voltage or power failure occurs, the inverter output is shut off.
			1	When under voltage or a power failure occurs, the inverter can be decelerated to a stop.
			2	When under voltage or a power failure occurs, the inverter can be decelerated to a stop. If power is restored during a power failure, the inverter accelerates again.

Parameters referred to		Refer to Section
57	Restart coasting time	6.11.1
190/192/ 197	Output terminal function selection	6.9.5

The above parameter can be set when Pr. 160 = 0.

Parameter setting

When Pr. 261 is set to "1" or "2", the inverter decelerates to a stop if an undervoltage or power failure occurs.

Operation outline of deceleration to stop at power failure

When undervoltage or power failure has occurred, the output frequency is decreased and controlled so that the converter circuit (DC bus) voltage is constant and decreased to 0Hz to stop.

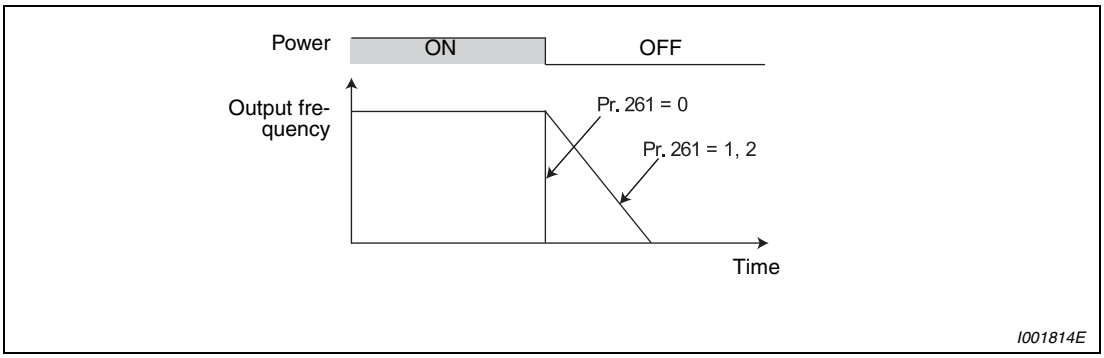

Fig. 6-71: *Parameters for stop selection at power failure*

Power failure stop mode (Pr. 261 = 1)

If power is restored during power failure deceleration, deceleration to a stop is continued and the inverter remains stopped. To restart, turn off the start signal once, then turn it on again.

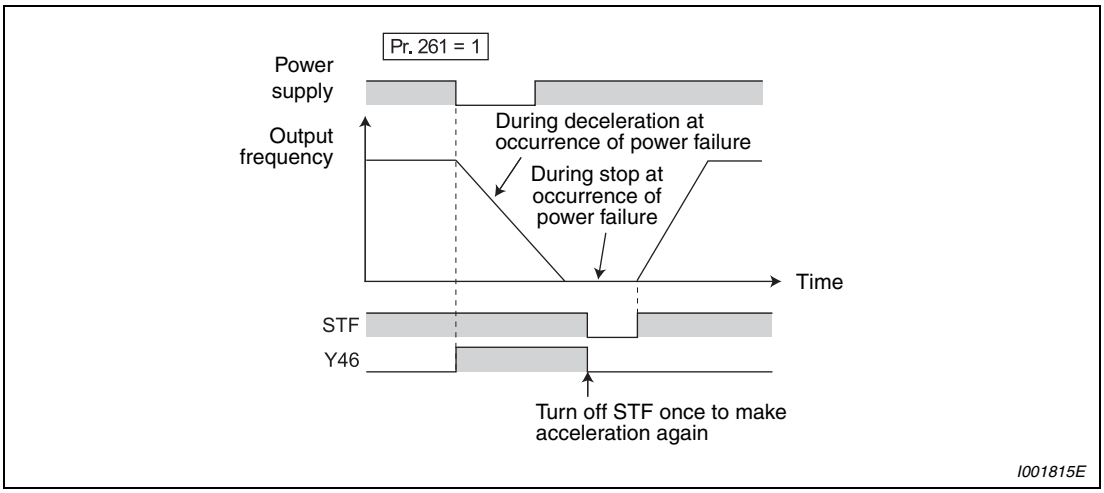

Fig. 6-72: *Power restoration*

NOTES

When automatic restart after instantaneous power failure is selected (Pr. 57 ≠ 9999), power failure stop function is made invalid and automatic restart operation after instantaneous power failure is made valid.

When the power failure deceleration stop function is active (Pr. 261 = "1"), the inverter will not start even if the power is turned ON with the start signal (STF/STR) ON. After switching on the power, turn off the start signal once and then on again to make a start.

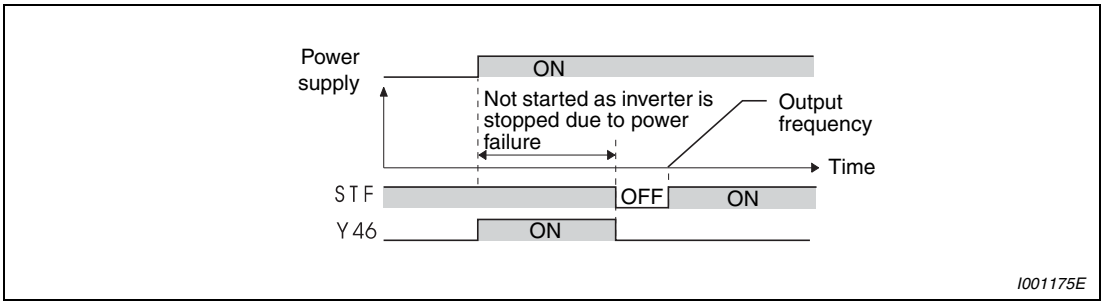

Fig. 6-73: *Restart at power restoration*

Operation continuation at instantaneous power failure function (Pr. 261 = 2)

When power is restored during deceleration after a power failure, acceleration is made again up to the set frequency.

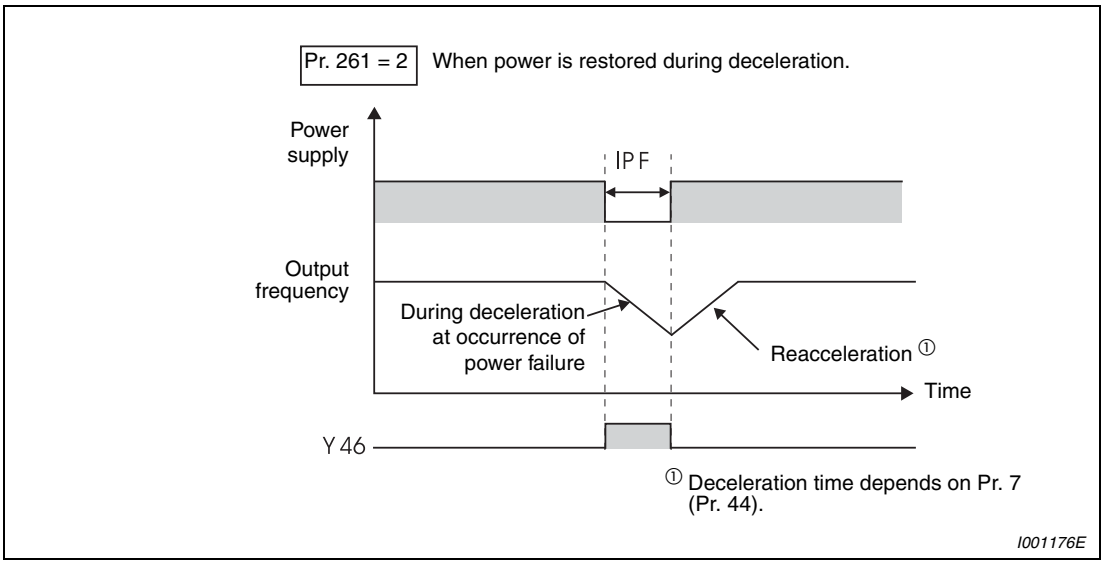

Fig. 6-74: *Operation continuation at instantaneous power failure*

When this function is used in combination with the automatic restart after instantaneous power failure function (Pr. 57 ≠ 9999), deceleration can be made at a power failure and acceleration can be made again after power restoration.

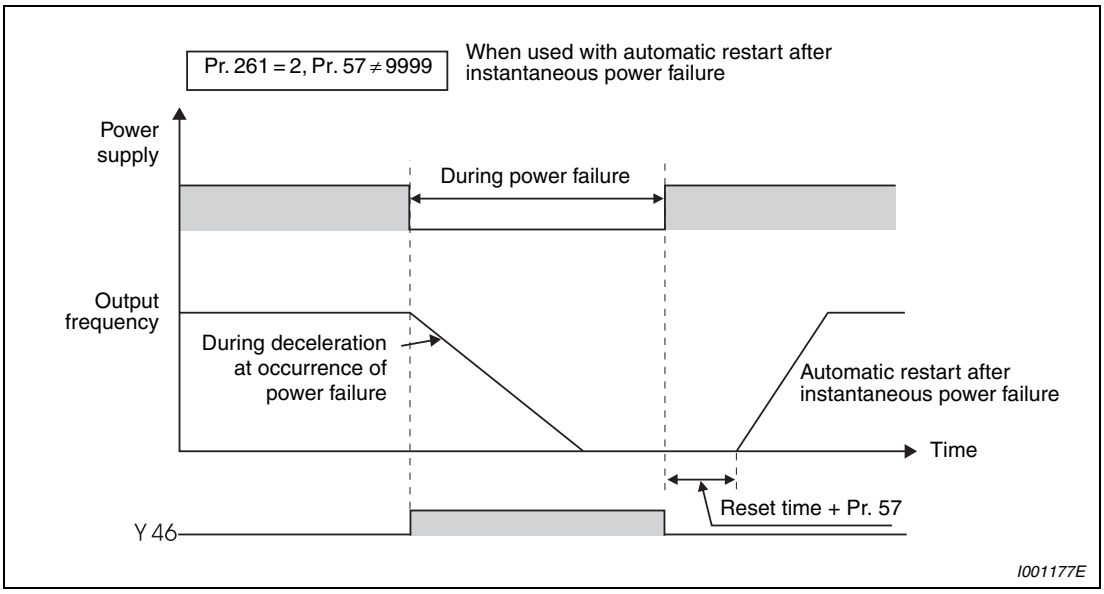

Fig. 6-75: *Operation continuation at instantaneous power failure*

NOTE

When operation continuation at instantaneous power failure function is used, keep the starting signal (STF/STR) on even during instantaneous power failure. If the starting signal turns off during instantaneous power failure, the inverter decelerates according to the deceleration time setting, causing the motor to coast if enough regenerative energy is not obtained.

Power failure deceleration signal (Y46 signal)

The Y46 signal is on during deceleration at an instantaneous power failure or during a stop after deceleration at an instantaneous power failure.
After a power failure stop, the inverter can not start even if power is restored the start command is given. In this case, check the power failure deceleration signal (Y46 signal) (at occurrence of input phase loss (E.ILF), etc.).

In case of a power failure, signal Y46 is connected through during the brake time or in standstill after expiration of the brake time. For the Y46 signal, set "46" (forward operation) or "146" (reverse operation) to any of Pr. 190, Pr. 192 or Pr. 197 to assign the function.

NOTES

During a stop or trip, the power failure stop selection is not performed.

Signal Y46 is switched on in case of undervoltage, even if the brake is not applied to the motor during a temporary power failure. For this reason, Signal Y46 is permanently output during the switch-on routine. This is NOT an error.

Changing the terminal assignment using Pr. 190, Pr. 192 and Pr. 197 may affect the other functions. Please make setting after confirming the function of each terminal.

CAUTION:

If power-failure deceleration operation is set, some loads may cause the inverter to trip and the motor to coast. The motor will coast if enough regenerative energy is given from the motor.

6.12 Operation setting at alarm occurrence

Purpose	Parameters that must be set		Refer to section
Recover by retry operation at alarm occurrence	Retry operation	Pr. 65, Pr. 67–Pr. 69	6.12.1
Do not input/output phase failure alarm	Input/output phase failure protection selection	Pr. 251, Pr. 872	6.12.2
Detect an earth (ground) fault at start	Earth (ground) fault detection at start	Pr. 249	6.12.3

6.12.1 Retry function (Pr. 65, Pr. 67 to Pr. 69)

If a fault occurs, the inverter resets itself automatically to restart. You can also select the fault for a retry.

When you have selected automatic restart after instantaneous power failure (Pr. 57 ≠ 9999), restart operation is performed at the retry operation time which is the same of that of a power failure. (Refer to section 6.11.1 for the restart function.)

Pr. No.	Name	Initial Value	Setting Range	Description
65	Retry selection	0	0–5	An alarm for retry can be selected.
67	Number of retries at alarm occurrence	0	0	No retry function
			1–10	Set the number of retries at alarm occurrence. An alarm output is not provided during retry operation.
			101–110	Set the number of retries at alarm occurrence. (The setting value of minus 100 is the number of retries.) An alarm output is provided during retry operation.
68	Retry waiting time	1 s	0.1–600s	Set the waiting time from when an inverter alarm occurs until a retry is made.
69	Retry count display erase	0	0	Clear the number of restarts succeeded by retry.

Parameters referred to	Refer to Section
57 Restart coasting time	6.11.1

The above parameters can be set when Pr. 160 = 0.

Retry operation automatically resets a fault and restarts the inverter at the starting frequency when the time set in Pr. 68 elapses after the inverter is tripped.

Retry operation is performed by setting Pr. 67 to any value other than "0". Set the number of retries at fault occurrence in Pr. 67.
When retries fail consecutively more than the number of times set in Pr. 67, a retry count excess fault (E.RET) occurs, resulting in inverter trip. (Refer to retry failure example in Fig. 6-77.)

Use Pr. 68 to set the waiting time from when the inverter trips until a retry is made in the range 0.1s to 600s. (When the setting value is "0s", the actual time is 0.1s.)

Reading the Pr. 69 value provides the cumulative number of successful restart times made by retry. The cumulative count in Pr. 69 is increased by 1 when a retry is regarded as successful after normal operation continues without faults occurring for more than four times longer than the time set in Pr. 68 after a retry start. (When retry is successful, cumulative number of retry failure is cleared.) Writing "0" to Pr. 69 clears the cumulative count.

During a retry, the Y64 signal is on. For the Y64 signal, assign the function by setting "64" (positive logic) or "164" (negative logic) to any of Pr. 190, Pr. 192 or Pr. 197.

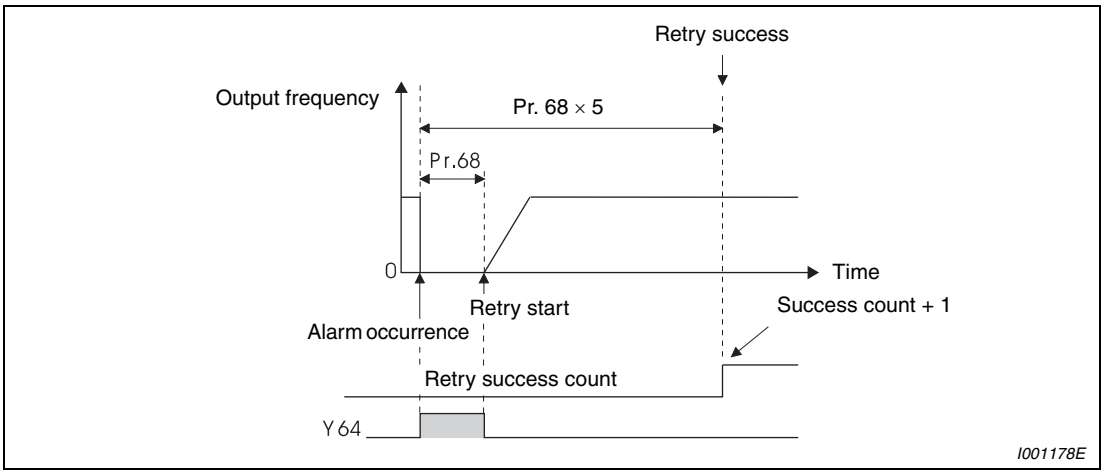

Fig. 6-76: *Retry success example*

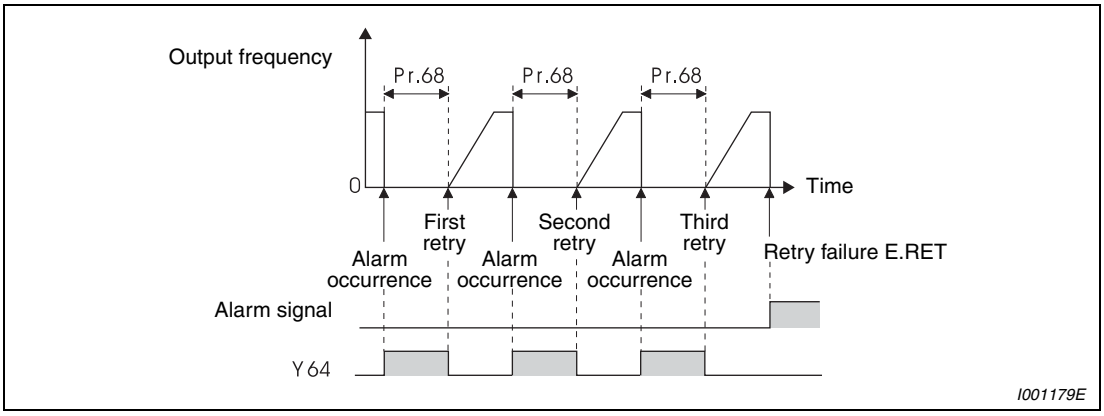

Fig. 6-77: *Retry failure example*

Using Pr. 65 you can select the alarm that will cause a retry to be executed. No retry will be made for the alarm not indicated.

Alarm Display for Retry	Name	Parameter 65 Setting					
		0	1	2	3	4	5
E.OC1	Overcurrent shut-off during acceleration	✔	✔	—	✔	✔	✔
E.OC2	Overcurrent shut-off during constant speed	✔	✔	—	✔	✔	—
E.OC3	Overcurrent shut-off during deceleration or stop	✔	✔	—	✔	✔	✔
E.OV1	Regenerative over voltage shut-off during acceleration	✔	—	✔	✔	✔	—
E.OV2	Regenerative over voltage shut-off during constant speed	✔	—	✔	✔	✔	—
E.OV3	Regenerative over voltage shut-off during deceleration or stop	✔	—	✔	✔	✔	—
E.THM	Motor overload shut-off (electronic thermal relay function)	✔	—	—	—	—	—
E.THT	Inverter overload shut-off (electronic thermal relay function)	✔	—	—	—	—	—
E.BE	Brake transistor alarm detection/Internal circuit error	✔	—	—	—	✔	—
E.GF	Output side earth (ground) fault overcurrent protection	✔	—	—	—	✔	—
E.OHT	External thermal relay operation	✔	—	—	—	—	—
E.PTC	PTC thermistor operation	✔	—	—	—	—	—
E.OLT	Stall Prevention	✔	—	—	—	✔	—
E.PE	Parameter storage device alarm	✔	—	—	—	✔	—
E.ILF	Input phase failure	✔	—	—	—	✔	—
E.CDO	Output current detection value exceeded	✔	—	—	—	✔	—

Tab. 6-27: *Faults selected for retry*

NOTES

When terminal assignment is changed using Pr. 190, Pr. 192 and Pr. 197, the other functions may be affected. Make setting after confirming the function of each terminal.

For a retry error, only the description of the first alarm is stored.

When an inverter alarm is reset by the retry function at the retry time, the accumulated data of the electronic thermal relay function, regeneration converter duty etc. are not cleared. (Different from the power-on reset.)

Retry is not performed if E.PE (Parameter storage device fault) occurred at power on.

If a fault that is not selected for a retry occurs during retry operation (retry waiting time), the retry operation stops while the fault indication is still displayed.

CAUTION:

When you have selected the retry function, stay away from the motor and machine unless required. They will start suddenly (after the reset time has elapsed) after occurrence of an alarm.
When you have selected the retry function, apply CAUTION seals in easily visible places.

6.12.2 Input/output phase failure protection selection (Pr. 251, Pr. 872)

You can choose whether to make Input/output phase loss protection valid or invalid.

You can disable the output phase failure function that stops the inverter output if one of the inverter output side (load side) three phases (U, V, W) opens.

The protection function for the input phases (R/L1, S/L2, T/L3) can be deactivated.

Pr. No.	Name	Initial Value	Setting Range	Description
251	Output phase failure protection selection	1	0	Without output phase failure protection
			1	With output phase failure protection
872	Input phase failure protection selection ①	0	0	Without input phase failure protection
			1	With input phase failure protection

Parameters referred to	Refer to Section
—	

The above parameters can be set when Pr. 160 = 0.

① Available only for the three-phase power input specification model.

Output phase failure protection selection (Pr. 251)

- If phase loss occurs during inverter running (except for during DC brake operation, or output frequency is 1Hz or less), output phase loss protection (E.LF) activates, and inverter trips.
- When Pr. 251 is set to "0", output phase failure protection (E.LF) becomes invalid.

Input phase failure protection selection (Pr. 872)

When Pr. 872 is set to "1" (initial value), input phase failure protection (E.ILF) is provided if a phase failure of one phase among the three phases is detected for 1s continuously.

NOTES

If an input phase failure continues for a long time during inverter operation, the converter section and capacitor lives of the inverter will be shorter.

If the load is light or during a stop, lost phase cannot be detected because detection is performed based on the fluctuation of bus voltage. Also, if the power supply voltage is imbalanced, phase loss is less likely detected.

Phase loss can not be detected during regeneration load operation.

If parameter copy is performed from single-phase power input specification model to three-phase power input specification model, Pr. 872 setting may be changed. Check Pr. 872 setting after parameter copy.

6.12.3 Earth (ground) fault detection at start (Pr. 249)

You can choose whether to make earth (ground) fault detection at start valid or invalid. Earth (Ground) fault detection is executed only right after the start signal is input to the inverter.

Protective function will not activate if an earth (ground) fault occurs during operation.

Pr. No.	Name	Initial Value	Setting Range	Description
249	Earth (ground) fault detection at start	1	0	Without earth (ground) fault detection
			1	With earth (ground) fault detection

Parameters referred to	Refer to Section
—	

The above parameter can be set when Pr. 160 = 0.

NOTES

As detection is executed at starting, output is delayed for approx. 20ms every starting.

If an earth (ground) fault is detected with "1" set in Pr. 249, output side earth (ground) fault overcurrent (E.GF) is detected and the inverter trips. (Refer to page 7-13.)

If the motor capacity is smaller than the inverter capacity for the FR-D740-120SC or more, earth (ground) fault detection may not be provided.

6.13 Energy saving operation

Purpose	Parameters that must be set		Refer to Section
Energy saving operation	Energy saving operation and optimum excitation control	Pr. 60	6.13.1

6.13.1 Optimum excitation control (Pr. 60) V/F

Without a fine parameter setting, the inverter automatically performs energy saving operation. This inverter is optimum for fan and pump applications.

Pr. No.	Name	Initial Value	Setting Range	Description
60	Energy saving control selection ①	0	0	Normal operation mode
			9	Optimum excitation control mode

Parameters referred to		Refer to Section
	General-purpose magnetic flux vector control	6.2.2
57	Restart coasting time	6.11.1

The above parameter can be set when Pr. 160 = 0.

① When parameter is read using the FR-PU04, a parameter name different from an actual parameter is displayed.

When "9" is set in Pr. 60, the inverter operates in the optimum excitation control mode.

The optimum excitation control mode is a control system which controls excitation current to improve the motor efficiency to maximum and determines output voltage as an energy saving method.

NOTES

When the motor capacity is too small as compared to the inverter capacity or two or more motors are connected to the inverter, the energy saving effect is not expected.

When the optimum excitation control mode is selected, deceleration time may be longer than the setting value. Since overvoltage alarm tends to occur as compared to the constant torque load characteristics, set a longer deceleration time.

Optimum excitation control functions only under V/f control. Optimum excitation control does not function under general-purpose magnetic flux vector control.

Optimum excitation control will not be performed during an automatic restart after instantaneous power failure.

Since output voltage is controlled by optimum excitation control, output current may slightly increase.

6.14 Motor noise, EMI measures, mechanical resonance

Purpose	Parameters that must be set		Refer to Section
Reduction of the motor noise Measures against EMI and leakage currents	Carrier frequency and Soft-PWM selection	Pr. 72, Pr. 240, Pr. 260	6.14.1
Reduce mechanical resonance	Speed smoothing control	Pr. 653	6.14.2

6.14.1 PWM carrier frequency and soft-PWM control (Pr. 72, Pr. 240, Pr. 260)

You can change the motor sound.

Pr. No.	Name	Initial Value	Setting Range	Description
72	PWM frequency selection ①	1	0–15 (integral value)	PWM carrier frequency can be changed. The setting displayed is in [kHz]. The settings indicate the following frequencies: 0 ..... 0.7kHz Settings between 1–14 correspond directly to the frequency values. 15 ..... 14.5kHz
240	Soft-PWM operation selection ①	1	0	Soft-PWM is invalid
			1	When Pr. 72 = 0 to 5, Soft-PWM is valid.
260	PWM frequency automatic switchover	0	0	PWM carrier frequency is constant independently of load.
			1	Decreases PWM carrier frequency automatically when load increases.

Parameters referred to		Refer to Section
156	Stall prevention operation selection	6.2.4

The above parameters can be set when Pr. 160 = 0.

① The above parameters allow its setting to be changed during operation in any operation mode even if "0" (initial value) is set in Pr. 77 "Parameter write selection".

PWM carrier frequency changing (Pr. 72)

You can change the PWM carrier frequency of the inverter.

Changing the PWM carrier frequency produces an effect on avoiding the resonance frequency of a mechanical system or motor or on reducing noise or leakage current generated from the inverter.

Soft-PWM control (Pr. 240)

Soft-PWM control is a control system that changes the motor noise from a metallic tone into an unoffending complex tone.

PWM carrier frequency automatic reduction function (Pr. 260)

When Pr. 260 = "0" (initial value), the carrier frequency becomes constant (Pr. 72 setting) independently of the load, making the motor sound uniform.

When continuous operation is performed at 85% or more of the inverter rated current with the carrier frequency of the inverter set to 3kHz or more (Pr.72 ≥ "3") while Pr.260 = "1", the carrier frequency is automatically reduced to 2kHz to avoid E.THT (inverter overload shutoff). (Motor noise increases, but it is not a failure.)

NOTES

Decreasing the PWM carrier frequency reduces inverter-generated noise and leakage current, but increases motor noise.

When PWM carrier frequency is set to 1kHz or less (Pr. 72 ≤ 1), fast response current limit may function prior to stall prevention operation due to increase in ripple currents, resulting in insufficient torque. In such case, set fast-response current limit operation invalid using Pr. 156 "Stall prevention operation selection".

6.14.2 Speed smoothing control (Pr. 653)

Vibration due to mechanical resonance influences the inverter control, causing the output current (torque) unstable. In this case, the output current (torque) fluctuation can be reduced to ease vibration by changing the output frequency.

Pr. No.	Name	Initial Value	Setting Range	Description
653	Speed smoothing control	0	0–200%	Increase or decrease the value using 100% as reference to check an effect.

Parameters referred to	Refer to Section
—	

The above parameter can be set when Pr. 160 = 0.

Control block diagram

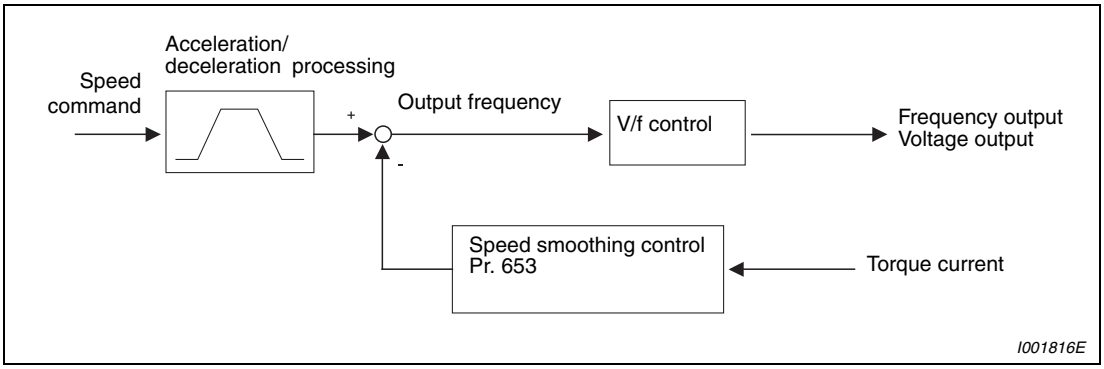

Fig. 6-78: *Control block diagram of the speed smoothing control*

Setting method

If vibration due to mechanical resonance occurs, set 100% in Pr. 653, run the inverter at the frequency which generates maximum vibration and check if the vibration will be reduced or not after several seconds.
If effect is not produced, gradually increase the Pr. 653 setting and check the effect repeatedly until the most effective value is set in Pr. 653.
If vibration becomes large by increasing the Pr. 653 setting, gradually decrease the Pr. 653 setting than 100% to check the effect in a similar manner.

NOTE

Depending on the machine, vibration may not be reduced enough or an effect may not be produced.

6.15 Frequency setting by analog input (terminal 2, 4)

Purpose	Parameters that must be set		Refer to Section
Selection of voltage/current input (terminal 2, 4) Perform forward/reverse rotation by analog input.	Analog input selection	Pr. 73, Pr. 267	6.15.1
Adjustment (calibration) of analog input frequency and voltage (current)	Bias and gain of frequency setting voltage (current)	Pr. 125, Pr. 126, Pr. 241, C2–C7 (Pr. 902–Pr. 905)	6.15.3

6.15.1 Analog input selection (Pr. 73, Pr. 267)

You can select the function that switches between forward rotation and reverse rotation according to the analog input terminal specifications and input signal.

The following settings are possible:

- Select reference voltages and currents: 0–10V, 0–5V oder 0/4–20mA
- Suppress motor reversing

Pr. No.	Name	Initial Value	Setting Range	Description	
73	Analog input selection	1	0	Terminal 2: 0–10V	Without reversible operation
			1	Terminal 2: 0–5V	
			10	Terminal 2: 0–10V	With reversible operation
			11	Terminal 2: 0–5V	
267	Terminal 4 input selection	0		**Voltage/current input switch**	**Description**
			0	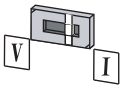	Terminal 4: 0/4–20mA
			1	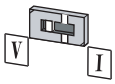	Terminal 4: 0–5V
			2		Terminal 4: 0–10V

Parameters referred to		Refer to Section
125	Terminal 2 frequency setting gain frequency	6.15.3
126	Terminal 4 frequency setting gain frequency	6.15.3
561	PTC thermistor protection level	6.7.1
C2 – C7	Terminal 2 frequency setting bias frequency to Terminal 4 frequency setting gain	6.15.3 6.15.3

The above parameters can be set when Pr. 160 = 0.

Selection of analog input specifications

For the terminal 2 for analog voltage input, 0 to 5V (initial value) or 0 to 10V can be selected. Either voltage input (0 to 5V, 0 to 10V) or current input (4 to 20mA initial value) can be selected for terminal 4 used for analog input. Change the input specifications by setting Pr. 73 and Pr. 267 and voltage/current input switch.

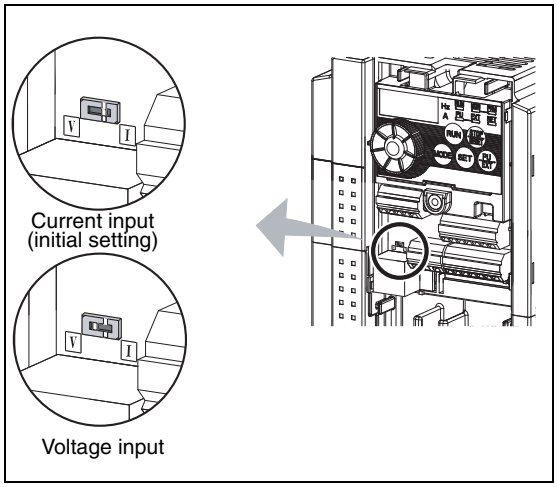

Fig. 6-79:
Voltage/current input switch

Rated specifications of terminal 4 change according to thevoltage/current input switch setting:
Voltage input: Input resistance 10kΩ ± 1kΩ, maximum permissible input voltage 20V DC
Current input: Input resistance 249Ω ± 5Ω, maximum permissible current 30mA

CAUTION:

Set Pr. 267 and a voltage/current input switch correctly, then input an analog signal in accordance with the setting. Incorrect setting as in the table below could cause component damage. Incorrect settings other than below can cause abnormal operation.

Setting Causing Component Damage		Operation
Switch Setting	**Terminal Input**	
I (current input)	Voltage input	This could cause component damage to the analog signal output circuit of signal output devices. (electrical load in the analog signal output circuit of signal output devices increases)
V (voltage input)	Current input	This could cause component damage of the inverter signal input circuit. (output power in the analog signal output circuit of signal output devices increases)

Refer to the following table and set Pr. 73 and Pr. 267. The half-tone screened areas indicate the main speed setting.

Pr. 73	Terminal 2	Terminal 4		Polarity Reversible
		AU Signal		
0	0–10V	OFF	—	No
1 (initial value)	0–5V			
10	0–10V			Yes
11	0–5V			
0	—	ON	According to Pr. 267: 0: 4–20mA (initial value) 1: 0–5V 2: 0–10V	No
1 (initial value)				
10	—			Yes
11				

Tab. 6-28: *Setting of parameter 73 and 267*

The terminal used for the AU signal input, set "4" in Pr. 178 to Pr. 182 to assign functions.

NOTES

Turn the AU signal on to make terminal 4 valid.

Make sure that the parameter and switch settings are the same. Different setting may cause a fault, failure or malfunction.

Use Pr. 125 (Pr. 126) "Frequency setting gain" to change the maximum output frequency at input of the maximum output frequency command voltage (current). At this time, the command voltage (current) need not be input. Also, the acceleration/deceleration time, which is a slope up/down to the acceleration/deceleration reference frequency, is not affected by the change in Pr. 73 setting.

When Pr. 561 ≠ 9999, terminal 2 is not available for analog frequency command.

Changing the terminal assignment using Pr. 178 to Pr. 182 may affect the other functions. Make setting after confirming the function of each terminal.

Perform operation by analog input voltage

The frequency setting signal inputs 0 to 5V DC (or 0 to 10V DC) to across the terminals 2-5. The 5V (10V) input is the maximum output frequency.

The power supply 5V can be input by either using the internal power supply or preparing an external power supply. Prepare an external power supply to input the power supply 10V. For the built-in power supply, terminals 10-5 provide 5V DC output.

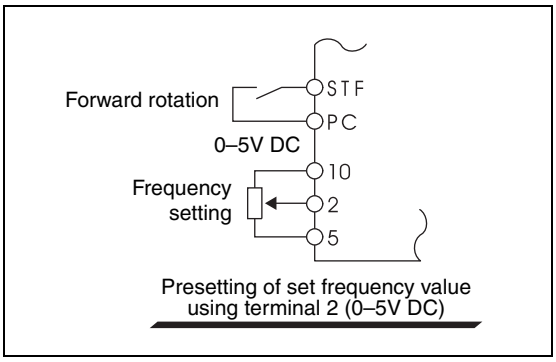

Fig. 6-80: *Frequency setting by voltage 0–5V DC*

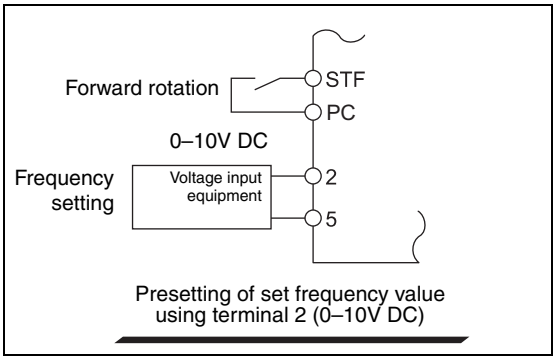

Fig. 6-81: *Frequency setting by voltage 0–10V DC*

Terminal	Inverter Built-in Power Supply Voltage	Frequency Setting Resolution	Pr. 73 (terminal 2 input voltage)
10	5V DC	0.1Hz/50Hz	0–5V DC

Tab. 6-29: *Built-in power supply voltage*

When inputting 10V DC to the terminal 2, set "0" or "10" in Pr. 73. (The initial value is 0 to 5V.)

Setting "1" (0 to 5V DC) or "2" (0 to 10V DC) in Pr. 267 and a voltage/current input switch in the "V" position changes the terminal 4 to the voltage input specification. When the AU signal turns on, the terminal 4 input becomes valid.

NOTE The wiring length of the terminal 10, 2, 5 should be 30m maximum.

Perform operation by analog input current

When the pressure or temperature is controlled constant by a fan, pump, etc., automatic operation can be performed by inputting the output signal 0/4 to 20mA of the adjuster to across the terminals 4-5.

The AU signal must be turned on to use the terminal 4.

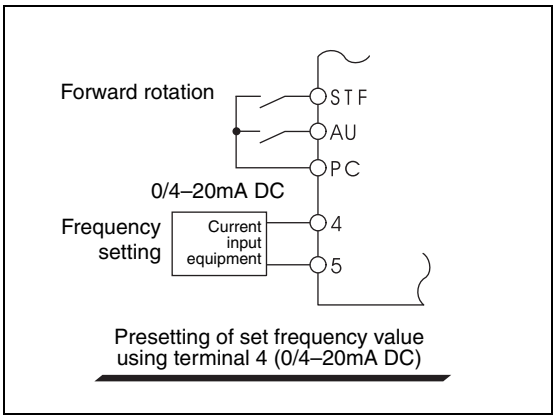

Fig. 6-82:
Frequency setting by the function "Current input 0/4–20mA" assigned to terminal 4

Perform forward/reverse rotation by analog input (polarity reversible operation)

Setting "10" or "11" in Pr. 73 and adjusting Pr. 125 (Pr. 126) "Terminal 2 frequency setting gain frequency" (Terminal 4 frequency setting gain frequency) and C2 (Pr. 902) "Terminal 2 frequency setting bias frequency" to C7 (Pr.905) "Terminal 4 frequency setting gain" makes reverse operation by terminal 2 (terminal 4) valid.

Example ▽

When performing reversible operation by terminal 2 (0 to 5V) input.

① Set "11" in Pr. 73 to make reversible operation valid.
Set frequency at maximum analog input in Pr. 125 (Pr. 903).

② Set 1/2 of the value set in C4 (Pr. 903) in C3 (Pr. 902).

③ Reversible operation is performed when 0 to 2.5V DC is input and forward rotation when 2.5 to 5V DC.

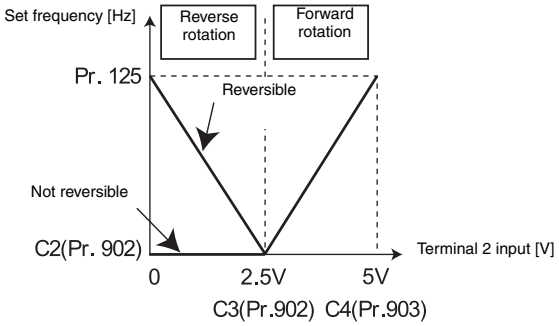

△

CAUTION:

When reversible operation is set, be aware of reverse rotation operation when analog input stops (only the start signal is input).

NOTE

When reversible operation is valid, reversible operation (0 to 4mA: reverse operation, 4mA to 20mA: forward operation) is performed by terminal 4 in the initial setting.

6.15.2 Input filter time constant (Pr. 74)

If the set point signal (terminal 2 or 4) is an unstable signal or contains noise you can filter out the instability or noise by increasing the setting value of Pr. 74.

Pr. No.	Name	Initial Value	Setting Value	Description
74	Input filter time constant	1	0–8	Set the primary delay filter time constant for the analog input. A larger setting results in a larger filter.

Parameters referred to	Refer to Section
—	

The above parameter can be set when Pr. 160 = 0.

Increase the filter time constant if steady operation cannot be performed due to noise. A larger setting results in slower response. (The time constant can be set between approximately 5ms to 1s with the setting of 0 to 8.)

6.15.3 Bias and gain of frequency setting voltage (current) [Pr. 125, Pr. 126, Pr. 241, C2 (Pr. 902) to C7 (Pr. 905)]

You can set the magnitude (slope) of the output frequency as desired in relation to the frequency setting signal (0 to 5V DC, 0 to 10V DC or 0/4 to 20mA DC).

These parameters can be used to configure the inverter precisely for set point signals that either exceed or do not quite reach 5V or 10V or 20mA. These settings can also be used to configure inverse control (i.e. high output frequency at minimum set point signal, minimum output frequency at maximum set point signal).

Pr. No.	Name	Initial Value	Setting Range	Description	
125	Terminal 2 frequency setting gain frequency	50Hz	0–400Hz	Set the frequency of terminal 2 input gain (maximum).	
126	Terminal 4 frequency setting gain frequency	50Hz	0–400Hz	Set the frequency of terminal 4 input gain (maximum).	
241	Analog input display unit switchover ①③	0	0	Displayed in %	Select the unit of analog input display.
			1	Displayed in V/mA	
C2 (902)	Terminal 2 frequency setting bias frequency ①②	0Hz	0–400Hz	Set the frequency on the bias side of terminal 2 input.	
C3 (902)	Terminal 2 frequency setting bias ①②	0%	0–300%	Set the converted % of the bias side voltage (current) of terminal 2 input.	
C4 (903)	Terminal 2 frequency setting gain ①②	100%	0–300%	Set the converted % of the gain side voltage of terminal 2 input.)	
C5 (904)	Terminal 4 frequency setting bias frequency ①②	0Hz	0–400Hz	Set the frequency on the bias side of terminal 4 input.	
C6 (904)	Terminal 4 frequency setting bias ①②	20%	0–300%	Set the converted % of the bias side current (voltage) of terminal 4 input.	
C7 (905)	Terminal 4 frequency setting gain ①②	100%	0–300%	Set the converted % of the gain side current (voltage) of terminal 4 input.	

Parameters referred to		Refer to Section
20	Acceleration/ deceleration reference frequency	6.6.1
73	Analog input selection	6.15.1
267	Terminal 4 input selection	6.15.1
79	Operation mode selection	6.17.1

① The above parameters can be set when Pr. 160 = 0.

② The parameter number in parentheses is the one for use with the operation panel (PA02) for the FR-E500 series or parameter unit (FR-PU04/FR-PU07).

③ The above parameter allow its setting to be changed during operation in any operation mode even if "0" (initial value) is set in Pr. 77 "Parameter write selection".

Change the frequency at maximum analog input (Pr. 125, Pr. 126)

Set a value to Pr. 125 (Pr. 126) when changing only the frequency setting (gain) of the maximum analog input power (current). (C2 (Pr. 902) to C7 (Pr. 905) setting need not be changed.)

Analog input bias/gain calibration [C2 (Pr. 902) to C7 (Pr. 905)]

The parameters for input bias and gain can be used to configure the inverter for set point signals that do not exactly match 5V or 10V or 20mA. You can enter the exact output frequencies to be associated with the minimum and maximum signal values separately for terminals 2 and 4. This feature can also be used to configure an inverse control characteristic (i.e. high output frequency at minimum set point signal, minimum output frequency at maximum set point signal).

Set the bias frequency of the terminal 2 input using C2 (Pr. 902). (Factory-set to the frequency at 0V.)

Parameter C3 (Pr. 902) is the frequency setting bias for the input signal at terminal 2, i.e. the minimum value of the analog signal. When signals are smaller than this value the frequency set point signal will be limited to the value set with C2.

Parameter 125 sets the gain for the terminal 2 output frequency. This is the frequency set point value that corresponds to the maximum analog signal defined with Pr. 73. (Pr. 125 is set to a default value of 50Hz at the factory.)

Parameter C4 (Pr. 903) sets the gain for the input signal on terminal 2, i.e. the maximum value of the analog signal connected to terminal 2. When signals exceed this value the frequency set point value is limited to the value stored in Pr. 125.

Parameter C5 (Pr. 904) sets the frequency set point bias frequency for terminal 4. This is the frequency corresponding to the minimum analog signal. (This parameter is set to a default value of 0Hz at the factory.)

Parameter C6 (Pr. 904) sets the bias of the input signal on terminal 4, i.e. the minimum value of the analog signal connected to terminal 4. When the signal on this terminal is lower than this value the frequency set point value is limited to the value set with C5. (This parameter is set to a default value of 20% at the factory, which corresponds to approx. 4mA.)

Parameter 126 sets the gain for the terminal 4 output frequency. This is the frequency set point value that corresponds to the maximum analog signal defined with Pr. 73. (Pr. 126 is set to a default value of 50Hz at the factory.)

Parameter C7 (Pr. 905) sets the gain of the input signal on terminal 4, i.e. the maximum value of the analog signal connected to terminal 4. When the signal on this terminal is higher than this value the frequency set point value is limited to the value set with Pr. 126.

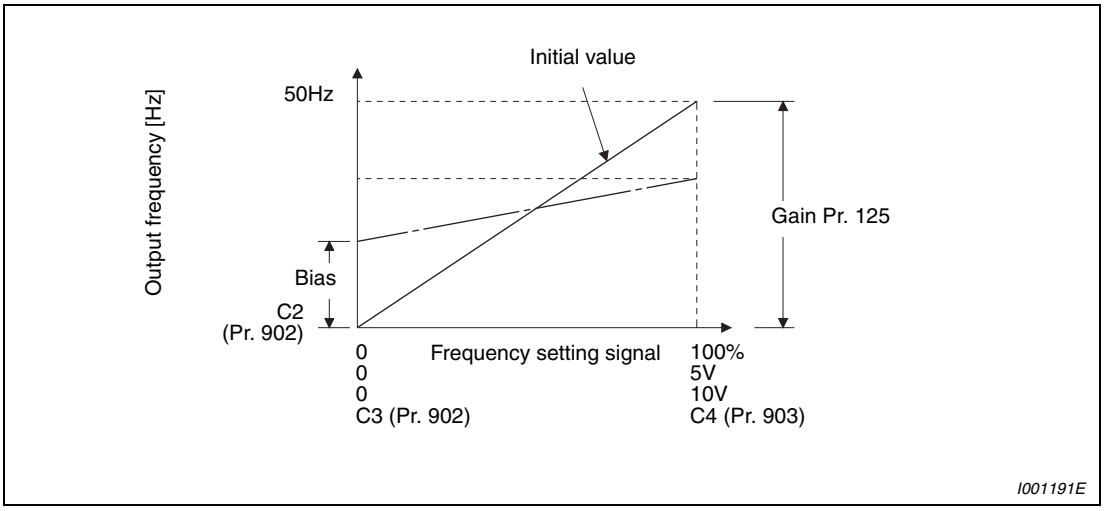

Fig. 6-83: *Signal adjustment of terminal 2*

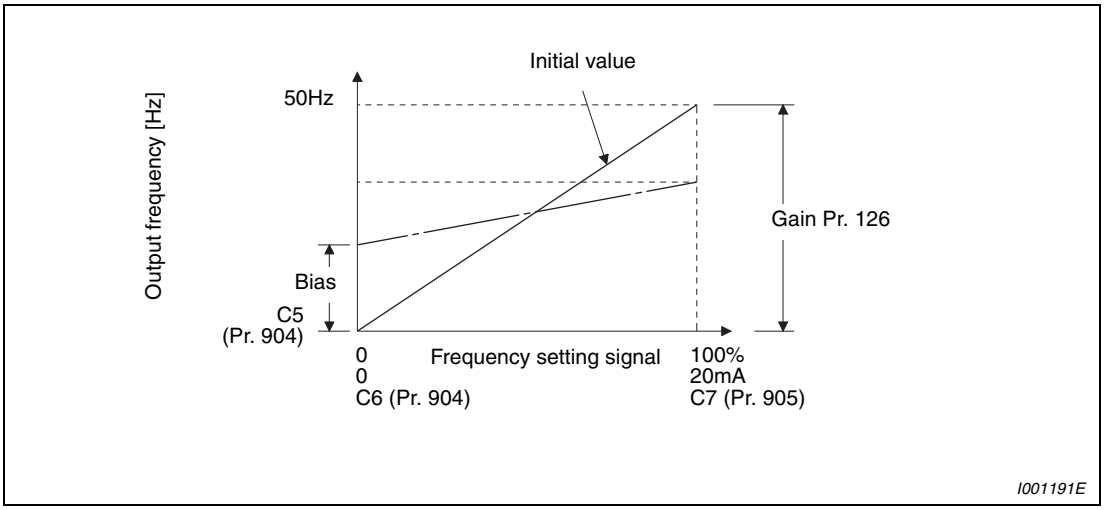

Fig. 6-84: *Signal adjustment of terminal 4*

There are three methods to adjust the frequency setting voltage (current) bias/gain:

- Method to adjust any point by application of voltage (current) to across the terminals 2-5 (4-5). (Refer to page 6-157.)
- Method to adjust any point without application of a voltage (current) to across terminals 2-5 (4-5). (Refer to page 6-158.)
- Adjusting only the frequency without adjusting the voltage (current). (Refer to page 6-159.)

NOTE

When voltage/current input signal for terminal 4 was switched using Pr. 267 and voltage/current input switch, perform calibration without fail.

Analog input display unit changing (Pr. 241)

The level display for the analog signal connected to terminal 2 or terminal 4 can be switched between a % display and a display in V or mA.

Depending on the terminal input specification set to Pr. 73 and Pr. 267, the display units of C3 (Pr. 902), C4 (Pr. 903), C6 (Pr. 904) and C7 (Pr. 905) change as shown below.

Analog Command (terminal 2, 4) (depending on Pr. 73, Pr. 267, and Voltage/Current Input Switch)	Pr. 241 = 0 (Initial Value)	Pr. 241 = 1
0–5V	0 to 5V → 0 to 100% (0.1%) is displayed.	0 to 100% → 0 to 5V (0.01V) is displayed.
0–10V	0 to 10V → 0 to 100% (0.1%) is displayed.	0 to 100% → 0 to 10V (0.01V) is displayed.
0/4–20mA	0 to 20mA → 0 to 100% (0.1%) is displayed.	0 to 100% → 0 to 20mA (0.01mA) is displayed.

Tab. 6-30: *Units when displaying the set value*

Note that the LED "A" also light up as an additional indicator when Pr. 241 is set to "1" and the display is set to the settings for C3/C4 or C6/C7.

Frequency setting signal (current) bias/gain adjustment method

1. Method to adjust any point by application of voltage (current) to across the terminals 2-5 (4-5). The following example illustrating the procedure assumes that Pr. 241 is set to "0":

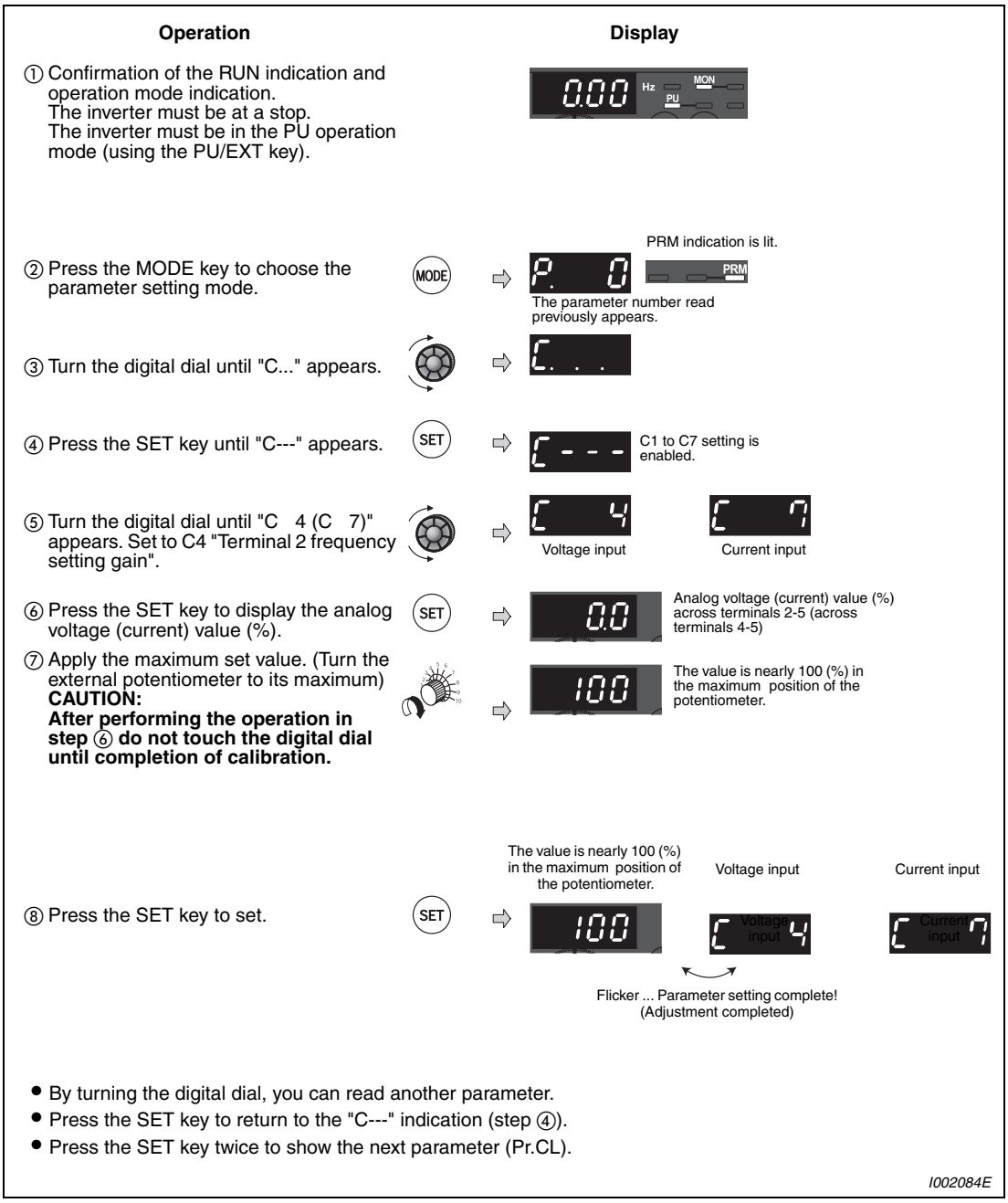

Fig. 6-85: *Bias and gain adjustment by application of an reference signal*

NOTES

If the frequency meter (display meter) connected across the terminals AM-5 does not indicate just 50Hz, set the calibration parameter C1. (Refer to section 6.10.4).

Error code Er3 may be displayed when you save if the frequency values for gain and bias are less than approx. 5% apart. If this happens correct the frequency settings and save again.

2. Method to adjust any point without application of a voltage (current) to across terminals 2-5 (4-5).
   (This example shows how to change from 4V to 5V, assuming that Pr. 241 is set to "1".)

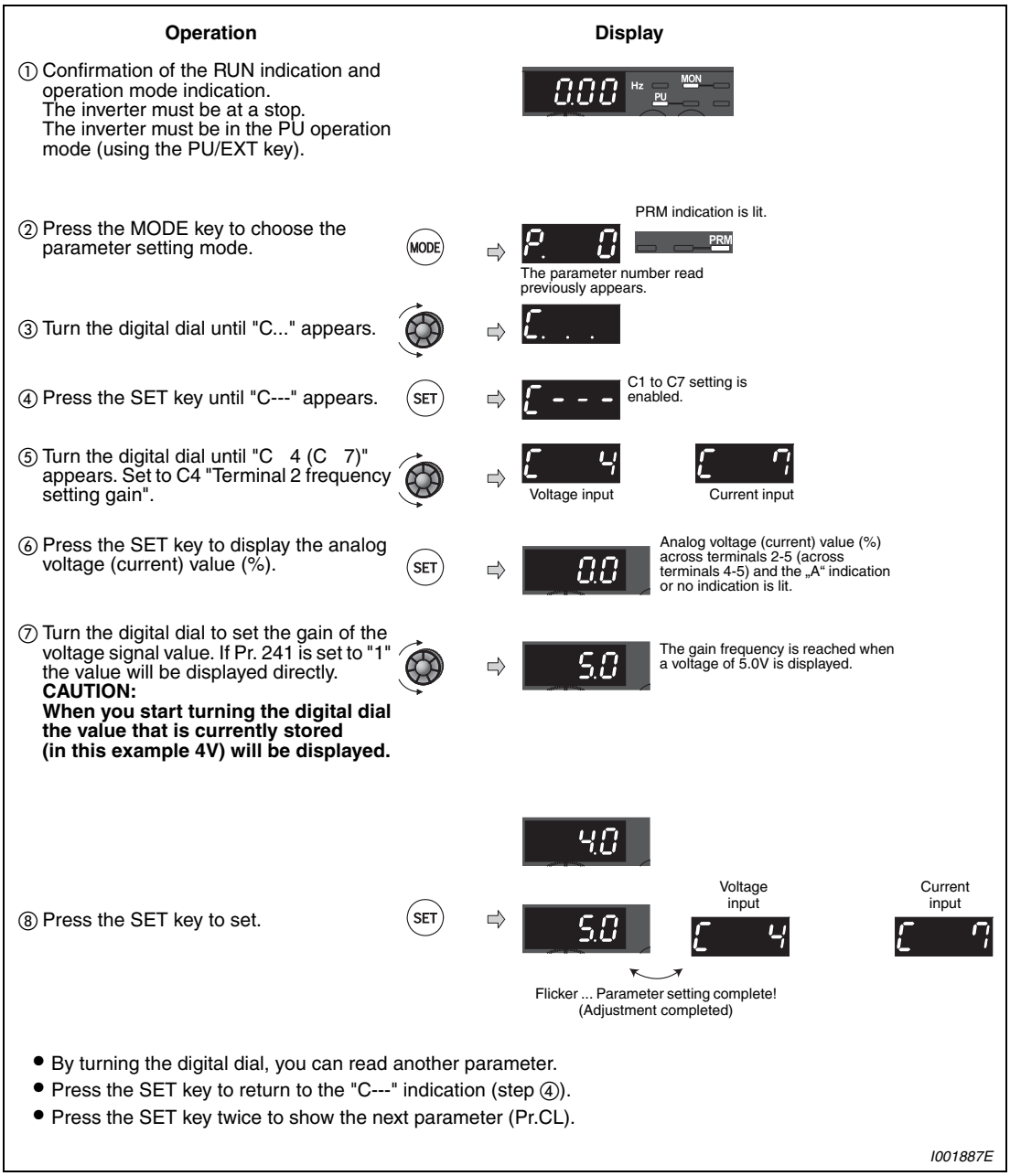

Fig. 6-86: *Bias and gain adjustment without application of an reference signal*

NOTE

By pressing the digital dial after step ⑥, you can confirm the current frequency setting bias/gain setting. It cannot be confirmed after execution of step ⑦.

3. Method to adjust only the frequency without adjustment of a gain voltage (current).
   (The gain frequency is changed from 50Hz to 40Hz.)

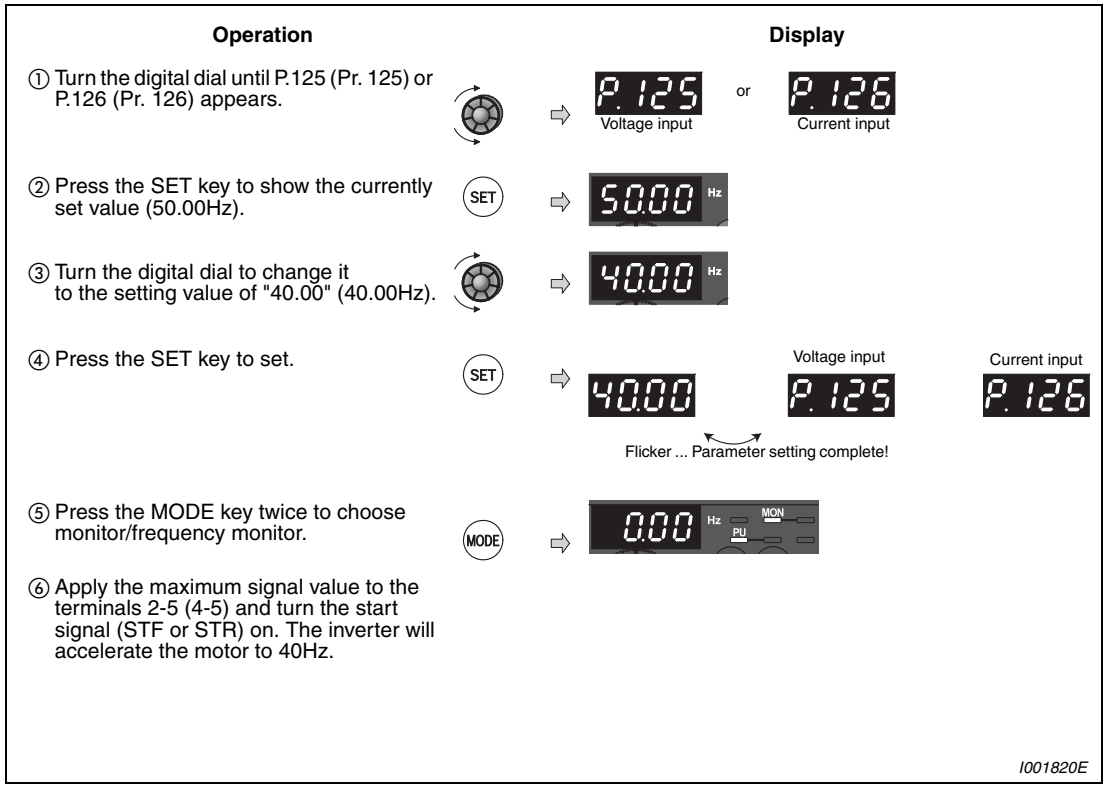

Fig. 6-87: *Adjusting only the frequency without adjustment of a voltage (current)*

NOTES

Changing C4 (Pr. 903) or C7 (Pr. 905) (gain adjustment) value will not change the Pr. 20 value. The input signal at terminal 1 (aux input) is added to the set frequency.

For the operation procedure using the parameter unit (FR-PU04/FR-PU07), refer to the FR-PU04/FR-PU07 instruction manual.

When setting the value to 120Hz or more, it is necessary to set Pr. 18 "High speed maximum frequency" to 120Hz or more. (Refer to page 6-40.)

Make the bias frequency setting using calibration parameter C2 (Pr. 902) or C5 (Pr. 904). (Refer to page 6-154.)

CAUTION:

Take care when setting any value other than "0" as the bias speed at 0V (0/4mA). Even if a frequency command is not given, merely turning on the start signal will start the motor at the preset frequency.

6.16 Misoperation prevention and parameter setting restriction

Purpose	Parameters that must be set		Refer to Section
Limit reset function Make alarm stop when PU is disconnected Stop from PU	Reset selection/ disconnected PU detection/ PU stop selection	Pr. 75	6.16.1
Prevention of parameter rewrite	Parameter write selection	Pr. 77	6.16.2
Prevention of reverse rotation of the motor	Reverse rotation prevention selection	Pr. 78	6.16.3
Displays necessary parameters	Display of applied parameters	Pr. 160	6.16.4
Parameter restriction with using password	Password function	Pr. 296, Pr. 297	6.16.5
Control of parameter write by communication	E²PROM write selection	Pr. 342	6.18.4

6.16.1 Reset selection/disconnected PU detection/PU stop selection (Pr. 75)

You can select the reset input acceptance, disconnected PU (FR-PU04/FR-PU07) connector detection function and PU stop function.

Pr. No.	Name	Initial Value	Setting Range	Description
75	Reset selection/ disconnected PU detection/ PU stop selection	14	0–3/ 14–17	For the initial value, reset always enabled, without disconnected PU detection, and with PU stop function are set.

Parameters referred to		Refer to Section
250	Stop selection	6.8.3
551	PU mode operation command source selection	6.17.3

The above parameter can be set when Pr. 160 = 0.

The Pr. 75 value can be set any time. Also, if parameter (all) clear is executed, this setting will not return to the initial value.

The above parameter allows its setting to be changed during operation in any operation mode even if "0" is set in Pr. 77.

Pr. 75	Reset Selection	Disconnected PU Detection	PU Stop Selection
0	Reset input always enabled.	If the PU is disconnected, operation will be continued.	Pressing the STOP key decelerates the motor to a stop only in the PU operation mode.
1	Enabled only when the protective function is activated		
2	Reset input always enabled.	When the PU is disconnected, the inverter output is shut off.	
3	Enabled only when the protective function is activated		
14 (initial value)	Reset input always enabled.	If the PU is disconnected, operation will be continued.	Pressing the STOP key decelerates the motor to a stop in any of the PU, external and communication operation modes.
15	Enabled only when the protective function is activated		
16	Reset input always enabled.	When the PU is disconnected, the inverter output is shut off.	
17	Enabled only when the protective function is activated		

Tab. 6-31: *Setting of parameter 75*

Reset selection

You can select the enable condition of reset function (RES signal, reset command through communication) input.

When Pr. 75 is set to any of "1, 3, 15, 17", a reset can be input only when the inverter is tripped.

NOTES

When the reset signal (RES) is input during operation, the motor coasts since the inverter being reset shuts off the output. Also, the cumulative value of the electronic thermal relay function and the regenerative brake duty are cleared.

The reset key of the PU is valid only when the protective function is activated, independently of the Pr. 75 setting.

Disconnected PU detection

This function detects that the PU (FR-PU04/FR-PU07) has been disconnected from the inverter for longer than 1s and causes the inverter to provide an alarm output (E.PUE) and come to an alarm stop.

When Pr. 75 is set to any of "0, 1, 14, 15", operation is continued if the PU is disconnected.

NOTES

When the PU has been disconnected since before power-on, it is not judged as an alarm.

To make a restart, confirm that the PU is connected and then reset the inverter.

The motor decelerates to a stop when the PU is disconnected during PU jog operation with Pr. 75 set to any of "0, 1, 14, 15" (operation is continued if the PU is disconnected).

When RS485 communication operation is performed through the PU connector, the reset selection/PU stop selection function is valid but the disconnected PU detection function is invalid.

PU stop selection

In any of the PU operation, external operation and network operation modes, the motor can be stopped by pressing the STOP key of the PU.

When the inverter is stopped by the PU stop function (refer to section 4.3 "Operation panel") in the external operation mode, "PS" is displayed but an alarm is not output. An alarm output is not provided.

After the motor is stopped from the PU, it is necessary to perform PU stop (PS) reset to restart. PS reset can be made from the unit from which PU stop is made (operation panel, parameter unit (FR-PU04/PU07, operation panel for FR-E500 (PA02)).

The motor can be restarted by making PS cancel using a power supply reset or RES signal.

When Pr. 75 is set to any of "0 to 3", PU stop (PS display) is invalid, deceleration to a stop by the STOP key is valid only in the PU operation mode.

NOTE

During operation in the PU operation mode through RS485 communication from the PU connector, the motor decelerates to stop (PU stop) when STOP is entered from the operation panel.

Restarting method when stop was made by pressing the STOP key from the PU during external operation ("PS" is displayed)

Operation panel

① After the motor has decelerated to a stop, turn off the STF or STR signal.

② Press the PU/EXT key to change to the PU operation mode. The PU indication is lit. The message "PS" is canceled.

③ Press the PU/EXT key to change to the external operation mode. The EXT indication is lit.

④ Turn on the STF or STR signal.

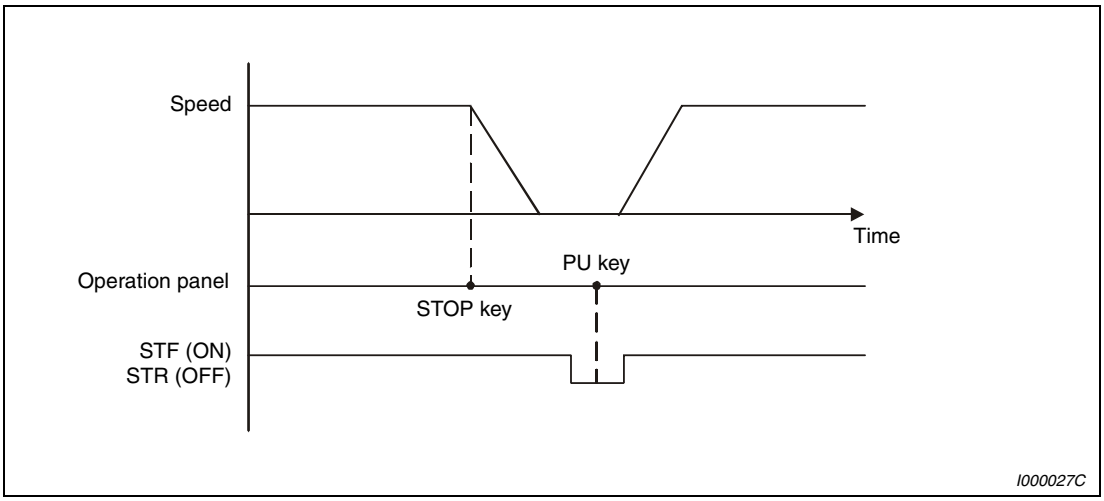

Fig. 6-88: *Stop during external operation*

Parameter unit (FR-PU04/FR-PU07)

① After completion of deceleration to a stop, switch off the STF or STR signal.

② Press the EXT key. The message "PS" is canceled.

③ Switch on the STF or STR signal.

The motor can be restarted by making a reset using a power supply reset or RES signal.

NOTE If Pr. 250 "Stop selection" is set to other than "9999" to select coasting to a stop, the motor will not be coasted to a stop but decelerated to a stop by the PU stop function during external operation.

Restart (PS reset) method when PU stop (PS display) is made during PU operation

PU stop ("PS" display) is made when the motor is stopped from the unit where control command source is not selected (operation panel, parameter unit (FR-PU04/FR-PU07 or FR-PA02) in the PU operation mode.
For example, when Pr. 551 "PU mode operation command source selection" = 9999 (initial value), the motor is stopped from the PU ("PS" display) if entered from the operation panel in PU operation mode with the parameter unit mounted.

When the motor is stopped from the PU when the parameter unit (FR-PU04/FR-PU07) is selected as control command source

① After the motor has decelerated to a stop, press the STOP key of the parameter unit (FR-PU04/FR-PU07).

② Press the PU/EXT key to change to the external operation mode. The EXT indication is lit. The message "PS" is canceled.

③ Press the PU key of the parameter unit (FR-PU04/FR-PU07) to select the PU operation mode.

④ Press the FWD or the REV key of the parameter unit (FR-PU04/FR-PU07).

NOTE

When Pr. 551 = "9999", the priorities of the PU control source is parameter unit (FR-PU04/FR-PU07) > operation panel.

CAUTION:

Do not reset the inverter while the start signal is being input. Otherwise, the motor will start instantly after resetting, leading to potentially hazardous conditions.

6.16.2 Parameter write selection (Pr. 77)

You can select whether write to various parameters can be performed or not. Use this function to prevent parameter values from being rewritten by misoperation.

Pr. No.	Name	Initial Value	Setting Range	Description
77	Parameter write selection	0	0	Write is enabled only during a stop.
			1	Parameter write is not enabled.
			2	Parameter write is enabled in any operation mode regardless of operation status.

Parameters referred to	Refer to Section
79 Operation mode selection	6.17.1

The above parameter can be set when Pr. 160 = 0.

Pr. 77 can be always set independently of the operation mode and operation status.

Write parameters only at a stop (Pr. 77 = 0)

Parameters can be written only during a stop in the PU operation mode.

The half-tone screened parameters in the parameter list (Tab. 6-1) can always be written, regardless of the operation mode and operation status. However, Pr. 72 "PWM frequency selection" and Pr. 240 "Soft-PWM operation selection" can be written during operation in the PU operation mode, but cannot be written in external operation mode.

Disable parameter write (Pr. 77 = 1)

Parameter write is not enabled. (Reading is enabled.)

Parameter clear and all parameter clear cannot be performed, either.

The parameters given below can be written if Pr. 77 = "1".

Parameter	Name
22	Stall prevention operation level
75	Reset selection/disconnected PU detection/PU stop selection
77	Parameter write selection
79	Operation mode selection
160	Extended function display selection
296	Password lock level
297	Password lock/unlock

Tab. 6-32: *Parameters that can be written even if Pr. 77 = 1*

Write parameters during operation (Pr. 77 = 2)

Parameters can always be written. The following parameters cannot be written during operation if Pr. 77 = 2. Stop operation when changing their parameter settings.

Parameter	Name
23	Stall prevention operation level compensation factor at double speed
40	RUN key rotation direction selection
48	Second stall prevention operation current
60	Energy saving control selection
66	Stall prevention operation reduction starting frequenc
71	Applied motor
79	Operation mode selection
80	Motor capacity (simple magnetic flux vector control)
82	Motor excitation current
83	Motor rated voltage
84	Rated motor frequency
90	Motor constant (R1)
96	Auto tuning setting/status
178–182	Input terminal function selection
190/192/197	Output terminal function selection
261	Power failure stop selection
298	Frequency search gain
450	Second applied motor
561	PTC thermistor protection level

Tab. 6-33: *Parameters that cannot be written during operation*

6.16.3 Reverse rotation prevention selection (Pr. 78)

In some applications (fans, pumps) it is necessary to ensure that the motor cannot be reversed. This can be achieved with Pr. 78.

Pr. No.	Name	Initial Value	Setting Range	Description
78	Reverse rotation prevention selection	0	0	Both forward and reverse rotations allowed
			1	Reverse rotation disabled
			2	Forward rotation disallowed

Parameters referred to	Refer to Section
—	

The above parameter can be set when Pr. 160 = 0.

Set this parameter when you want to limit the motor rotation to only one direction.

This parameter is valid for all of the reverse rotation and forward rotation keys of the operation panel and parameter unit (FR-PU04/FR-PU07), the start signals (STF, STR signals) via external terminals, and the forward and reverse rotation commands through communication.

6.16.4 Extended parameter display (Pr. 160)

Parameter 160 allows access to certain parameters via the control panel and the parameter unit

Pr. No.	Name	Initial Setting	Setting Range	Description
160	Extended function display selection	0	9999	Displays only the simple mode parameters.
			0	Displays simple mode and extended parameters.

Parameters referred to	Refer to Section
15 Jog frequency	6.5.2
16 Jog acceleration/deceleration time	6.5.2
551 PU mode operation command source selection	6.17.3

The above parameter allows its setting to be changed during operation in any operation mode even if "0" is set in Pr. 77.

Display of simple mode parameters and extended parameters (Pr. 160)

When Pr. 160 = "9999", only the simple mode parameters can be displayed on the operation panel and parameter unit (FR-PU04/FR-PU07). (Refer to the parameter list Tab. 6-1 for the simple mode parameters.)

Setting "0" (initial value) to Pr. 160 enables the display of the simple mode parameters and extended parameters.

NOTES

When RS485 communication is used to read the parameters, all parameters can be read - regardless of Pr. 160 setting - by setting a value ≠ "2" in Pr. 551 "PU mode operation command source selection".

Pr. 15 "Jog frequency", Pr. 16 "Jog acceleration/deceleration time", and Pr. 991 "PU contrast adjustment" are displayed as simple mode parameter when the parameter unit (FR-PU04/FR-PU07) is fitted.

6.16.5 Password function (Pr. 296, Pr. 297)

Registering 4-digit password can restrict parameter reading/writing.

Pr. No.	Name	Initial Setting	Setting Range	Description
296	Password lock level	9999	1–6/101–106	Select restriction level of parameter reading/ writing when a password is registered.
			9999	No password lock
297	Password lock/ unlock	9999	1000–9998	Register a 4-digit password
			(0–5)	Displays password unlock error count. (Reading only) (Valid when Pr. 296 = "101" to "106")
			(9999)	No password lock (Reading only)

Parameters referred to		Refer to Section
77	Parameter write selection	6.16.2
160	Extended function display selection	6.16.4
551	PU mode operation command source selection	6.17.3

The above parameters can be set when Pr. 160 = 0.

The above parameters allow its setting to be changed during operation in any operation mode even if "0" is set in Pr. 77.

When Pr. 296 ≠ "9999" (with password lock), note that Pr. 297 is always available for setting regardless of Pr. 160 setting.

Parameter reading/writing restriction level (Pr. 296)

Level of reading/writing restriction by PU/NET mode operation command can be selected by Pr. 296.

Pr. 296	PU Mode Operation Command ③		NET Mode Operation Command ④	
	Read ①	Write ②	Read ①	Write ②
9999	✔	✔	✔	✔
1/101	✔	—	✔	—
2/102	✔	—	✔	✔
3/103	✔	✔	✔	—
4/104	—	—	—	—
5/105	—	—	✔	✔
6/106	✔	✔	—	—

Tab. 6-34: *Level of password lock and reading/writing restriction*

① If the parameter reading is restricted by the Pr. 160 setting, those parameters are unavailable for reading even when "✔" is indicated.

② If the parameter writing is restricted by the Pr. 77 setting, those parameters are unavailable for writing even when "✔" is indicated.

③ Parameter access from unit where parameter is written in PU operation mode (initially set to operation panel, parameter unit) is restricted. (For PU mode operation command source selection refer to section 6.17.3.)

④ Parameter access in NET operation mode with RS485 communication is restricted.

Password lock/unlock (Pr. 296, Pr. 297)

● Lock

① Set parameter reading/writing restriction level (Pr. 296 ≠ 9999).

Pr. 296	Restriction of Password Unlock Error	Pr. 297 Display
1 to 6	No restriction	Always „0“
101 to 106	Restricted at fifth error	Displays error count (0 to 5)

During Pr. 296 = "101 to 106", if password unlock error has occurred 5 times, correct password will not unlock the restriction. Parameter all clear can unlock the restriction. (In this case, parameter settings are cleared.)

② Write four-digit numbers (1000 to 9998) in Pr. 297 as a password.
(When Pr. 296 = "9999", Pr. 297 can't be written.)
When password is registered, parameter reading/writing is restricted with the restriction set level in Pr. 296 until unlocking.

NOTES

After registering a password, a read value of Pr. 297 is always "0" to "5".

When a password restricted parameter is read/written, "LOCD" is displayed.

Even if a password is registered, parameters which the inverter itself writes, such as inverter parts life, are overwritten occasionally.

Even if a password is registered, Pr. 991 "PU contrast adjustment" can be read/written when a parameter unit (FR-PU04/FR-PU07) is connected.

● Unklock
There are two ways of unlocking the password:

– Enter a password in Pr. 297.
Unlocked when a password is correct. If a password is incorrect, an error occurs.
During Pr. 296 = "101 to 106", if password unlock error has occurred 5 times, correct password will not unlock the restriction. (During password lock)

– Perform parameter all clear.
Password lock is unlocked. However, other parameter settings are cleared also.

NOTES

If the password has been forgotten, perform parameter all clear to unlock the parameter restriction. In that case, other parameters are also cleared.

Parameter all clear can not be performed during operation.

Do not use the FR Configurator under the conditions that parameter read is restricted (Pr. 296 = "4, 5, 104, 105"). FR Configurator may not function properly.

Parameter operation during password lock/unlock

Parameter operation		Unlocked		Password registered	Locked
		Pr. 296 = 9999 Pr. 297 = 9999	Pr. 296 ≠ 9999 Pr. 297 = 9999	Pr. 296 ≠ 9999 Pr. 297 = 0–4 (Read value)	Pr. 296 = 101–106 Pr. 297 = 5 (Read value)
Pr. 296	Read	✔ ①	✔	✔	✔
	Write	✔ ①	✔ ①	—	—
Pr. 297	Read	✔ ①	✔	✔	✔
	Write	—	✔	✔	✔ ③
Performing parameter clear		✔	✔	—	—
Performing parameter all clear		✔	✔	✔ ②	✔ ②
Performing parameter copy		✔	✔	—	—

Tab. 6-35: *Parameter operation during password lock/unlock*

① Reading/writing is unavailable when there is restriction to reading by the Pr. 160 setting.

② Unavailable during during operation.

③ Correct password will not unlock the restriction.

NOTES

When Pr. 296 = "4, 5, 104, 105" and using the parameter unit (FR-PU04/FR-PU07), PU JOG operation is unavailable.

When writing is restricted from PU mode operation command (Pr. 296 = 1, 2, 4, 5, 101, 102, 104, 105), switching of operation mode by easy setting mode is unavailable.

During password lock, parameter copy of the parameter unit (FR-PU07) cannot be performed.

6.17 Selection of operation mode and operation location

Purpose	Parameters that must be set		Refer to Section
Operation mode selection	Operation mode selection	Pr. 79	6.17.1
Started in network operation mode	Operation mode at power on	Pr. 79, Pr. 340	6.17.2
Selection of control source	Selection of control source, speed command source and control location during communication operation	Pr. 338, Pr. 339, Pr. 551	6.17.3

6.17.1 Operation mode selection (Pr. 79)

Used to select the operation mode of the inverter.

Mode can be changed as desired between operation using external command signals (external operation), operation from the operation panel and PU (FR-PU07/FR-PU04) (PU operation), combined operation of PU operation and external operation (external/PU combined operation), and network operation (when RS485 communication is used).

Pr. No.	Name	Initial Value	Setting Range	Description
79	Operation mode selection	0	0	External/PU switchover mode External operation mode at power on
			1	Fixed to PU operation mode
			2	Fixed to external operation mode Operation can be performed by switching between external and NET operation mode
			3	Combined operation mode 1 Running frequency: Operation panel, and PU (FR-PU04/FR-PU07) setting or external signal input [multi-speed setting, across terminals 4-5 (valid when AU signal turns on)] ① Start signal: External signal input (terminal STF, STR)
			4	External/PU combined operation mode 2 Running frequency: External signal input (terminal 2, 4, JOG, multi-speed setting, etc.) Start signal: Enter from the RUN key of the operation panel and the FWD/REV keys of the PU (FR-PU04/FR-PU07)
			6	Switchover mode Switchover between PU operation, external operation, and NET operation is available while keeping the same operation status.
			7	External operation mode (PU operation interlock) X12 signal ON: Operation mode can be shifted to PU operation mode (output stop during external operation) X12 signal OFF: Operation mode can not be switched to PU operation mode.

Parameters referred to		Refer to Section
15	Jog frequency	6.5.2
4–6 24–27 232–239	Multi-speed operation	6.5.1
75	Reset selection/ disconnected PU detection/ PU stop selection	6.16.1
161	Frequency setting/ key lock operation selection	6.21.3
178–182	Input terminal function selection	6.9.1
190/192/ 197	Output terminal function selection	6.9.5
340	Communication start-up mode selection	6.17.2

The above parameter can be changed during a stop in any operation mode.

① The priorities of the frequency commands when Pr. 79 = "3" are "Multi-speed operation (RL/RM/RH/REX) > PID control (X14) > terminal 4 analog input (AU) > digital input from the operation panel".

Operation mode basics

The operation mode is to specify the source of inputting the start command and set frequency of the inverter.

- Select the "external operation mode" when performing operation by basically using the control circuit terminals and providing potentiometers, switches, etc. externally.
- Select the "PU operation mode" when inputting the start command and frequency setting through communication from the operation panel, parameter unit (FR-PU04/FR-PU07) or PU connector.
- Select the "network operation mode (NET operation mode)" when the commands are applied from the RS485 communication with the PU connector.

The operation mode can be selected from the operation panel or with the communication instruction code.

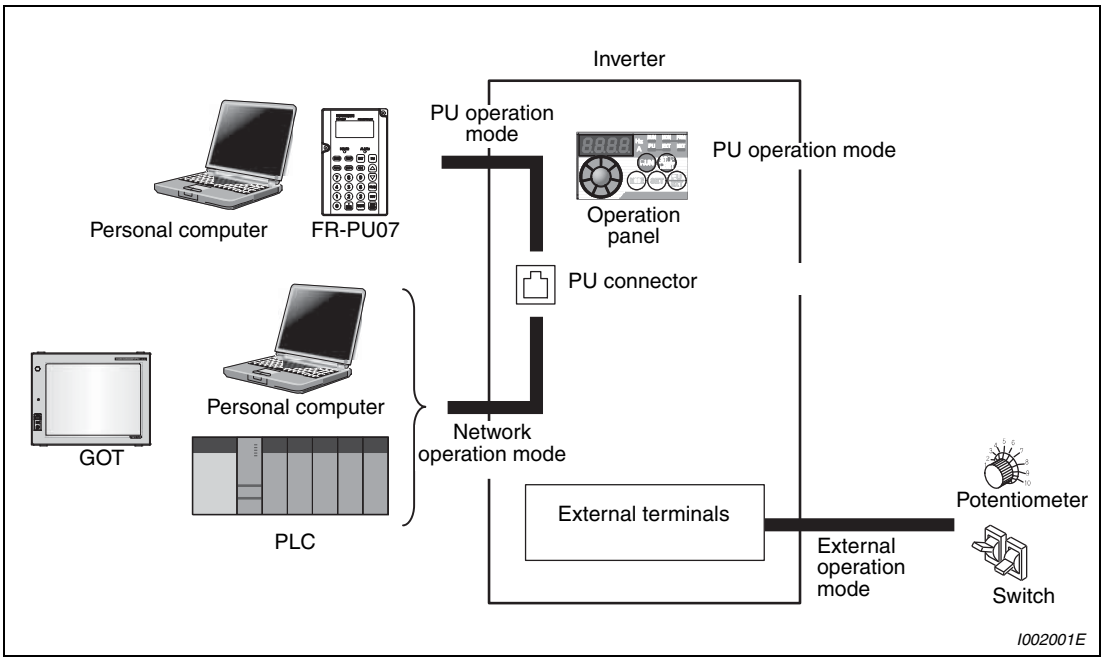

Fig. 6-89: *Operation modes of the inverter*

NOTES

Either "3" or "4" may be set to select the PU/external combined mode.

The stop function (PU stop selection) activated by pressing the STOP/RESET key of the operation panel and parameter unit (FR-PU04/FR-PU07) is valid even in other than the PU operation mode in the initial setting. (Refer to Pr. 75 "Reset selection/disconnected PU detection/PU stop selection" (section 6.16.1).)

Switching the operation mode

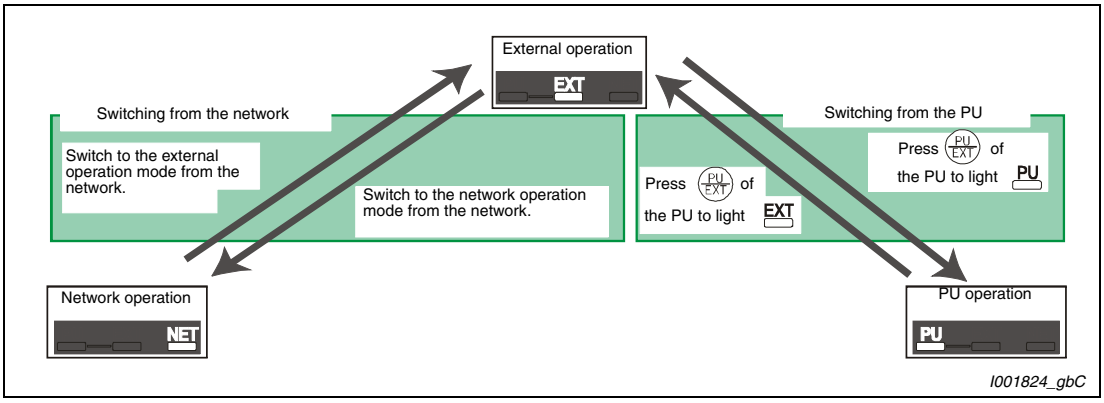

Fig. 6-90: *Switching the operation mode when Pr. 340 = 0 or 1*

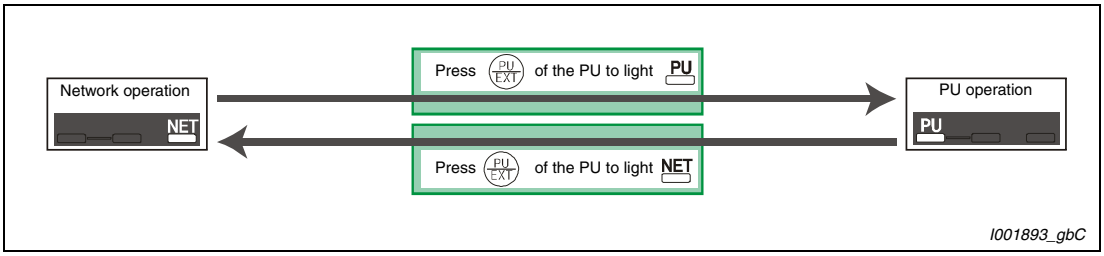

Fig. 6-91: *Switching the operation mode when Pr. 340 = 10*

NOTE

For switching of operation by external terminals, refer to the following:

- PU operation external interlock signal (X12 signal) (refer to page 6-180)
- PU-external operation switch-over signal (X16) (refer to page 6-181)
- PU-NET operation switchover signal (X65) (refer to page 6-182)
- External-NET operation switchover signal (X66) (refer to page 6-182)
- Pr. 340 "Communication start-up mode selection" (refer to page 6-184)

Operation mode selection flow

In the following flowchart, select the basic parameter setting and terminal connection related to the operation mode:

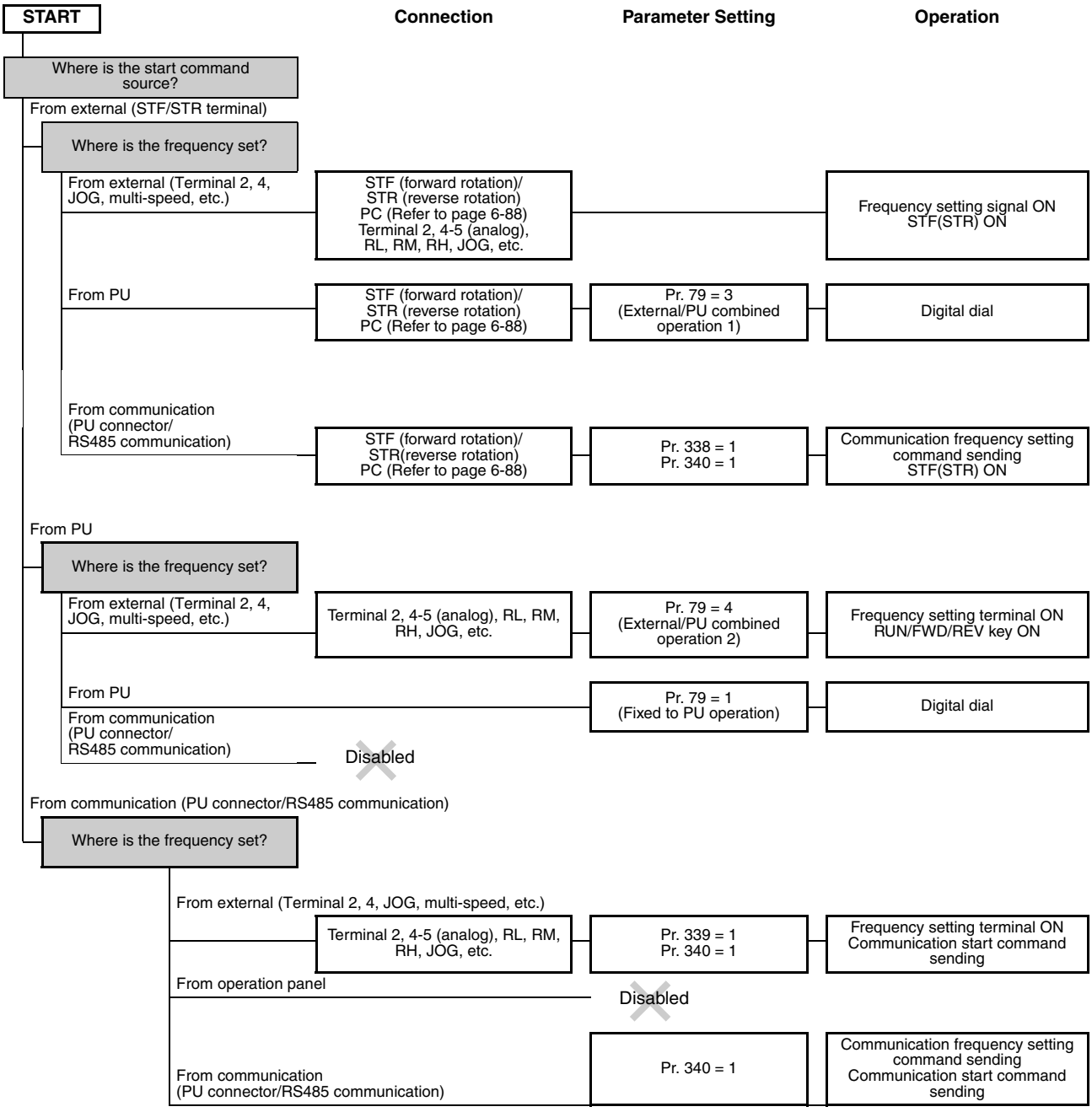

External operation mode (Pr. 79 = 0, 2)

Select the external operation mode when performing operation by providing a frequency setting potentiometer, start switch, etc. externally and connecting them to the control circuit terminals of the inverter.

Generally, parameter change cannot be performed from the operation panel in the External operation mode. (Some parameters can be changed. Refer to Tab. 6-1 for the parameter list.)

When "0" or "2" is selected for Pr. 79, the inverter enters the external operation mode at power on. (When using the network operation mode, refer to section 6.17.2).

If you don't need to change the parameter settings frequently you can set the unit to external mode permanently by setting Pr. 79 to "2". (If you need to change parameter settings frequently external mode should be activated by setting Pr. 79 to "0". Then the frequency inverter will switch to external mode automatically when the power is switched on but it can be switched to PU mode by pressing the PU/EXT key. You can then make the parameter changes in PU mode and switch back to external mode again afterwards by pressing PU/EXT again.)

The STF and STR signal are used as a start command, and the terminal 2, 4, multi-speed setting, JOG signal, etc. are used as frequency setting.

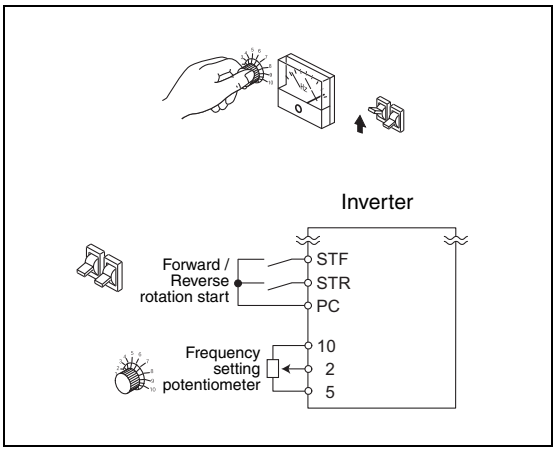

Fig. 6-92:
External operation mode

I002085E

PU operation mode (Pr. 79 = 1)

Select the PU operation mode when applying start and speed command by only the key operation of the operation panel (FR-PU04/FR-PU07). Also select the PU operation mode when making communication using the PU connector.

When "1" is selected for Pr. 79, the inverter enters the PU operation mode at power on. You cannot change to the other operation mode.

The digital dial of the operation panel can be used for setting like a volume. (Refer to section 6.21.3).

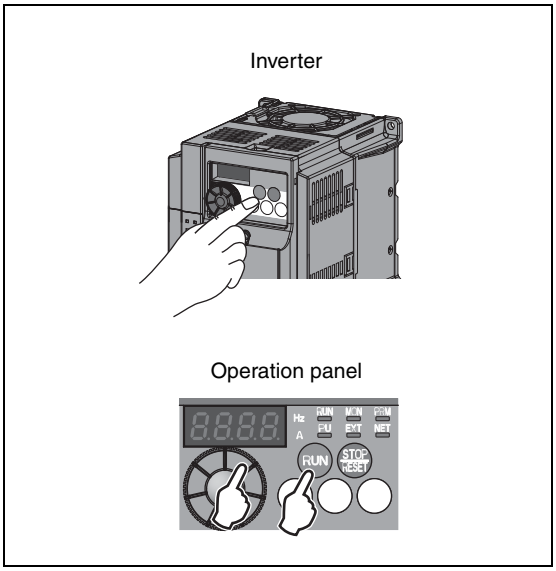

Fig. 6-93:
PU operation mode

I002086E

PU/external combined operation mode 1 (Pr. 79 = 3)

Select the PU/external combined operation mode 1 when applying frequency command from the operation panel or parameter unit (FR-PU04/FR-PU07) and inputting the start command with the external start switch.

Select "3" for Pr. 79. You cannot change to the other operation mode by using the PU/EXT-key.

When a frequency is input from the external signal by multi-speed setting, it has a higher priority than the frequency setting of the PU. When AU is on, the terminal 4 is used.

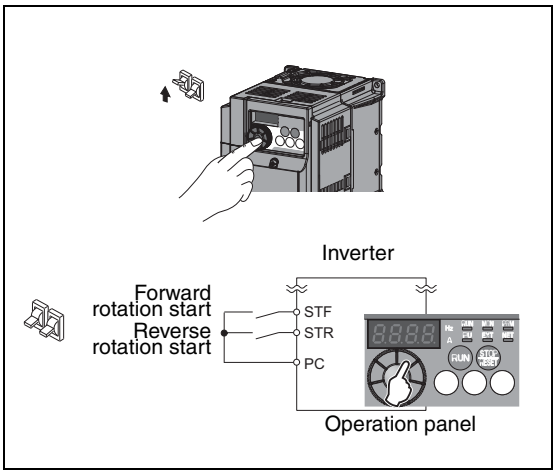

Fig. 6-94:
Combined operation mode 1

PU/external combined operation mode 2 (Pr. 79 = 4)

Select the PU/external combined operation mode 2 when applying frequency command from the external potentiometer, multi-speed or JOG signal and inputting the start command by key operation of the operation panel (FR-PU04/FR-PU07).

Select "4" for Pr. 79. You cannot change to the other operation mode by using the PU/EXT-key.

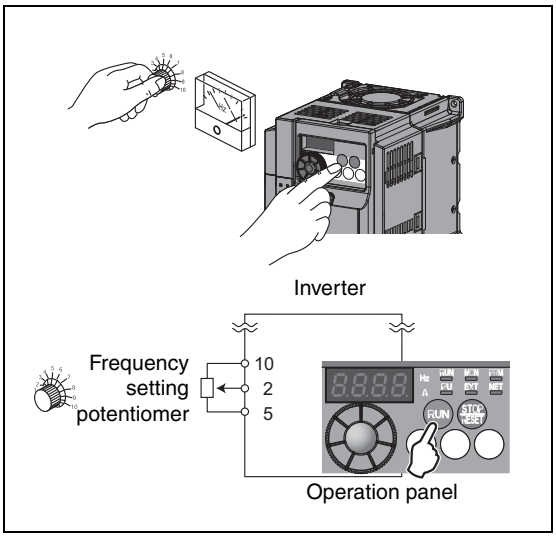

Fig. 6-95:
Combined operation mode 2

Switch-over mode (Pr. 79 = 6)

While continuing operation, you can switch between the PU operation, external operation and network operation (NET operation).

Operation Mode Switching	Switching Operation/Operating Status
External operation ⇒ PU operation	Select the PU operation mode with the operation panel or parameter unit. Rotation direction is the same as that of external operation. The frequency set with the potentiometer (frequency command) or like is used unchanged. (Note that the setting will disappear when power is switched off or the inverter is reset.)
External operation ⇒ NET operation	Send the mode change command to the network operation mode through communication. Rotation direction is the same as that of external operation. The value set with the setting potentiometer (frequency command) or like is used unchanged. (Note that the setting will disappear when power is switched off or the inverter is reset.)
PU operation ⇒ external operation	Press the external operation key of the parameter unit. The rotation direction is determined by the input signal of the external operation. The set frequency is determined by the external frequency command signal.
PU operation ⇒ NET operation	Send the mode change command to the network operation mode through communication. Rotation direction and set frequency are the same as those of PU operation.
NET operation ⇒ external operation	Command to change to external mode is transmitted by communication. Rotation direction is determined by the external operation input signal. The set frequency is determined by the external frequency command signal.
NET operation ⇒ PU operation	Select the PU operation mode with the operation panel or parameter unit. The rotation direction and frequency command in the network operation mode are used unchanged.

Tab. 6-36: *Operation states in the switch-over mode*

WARNING:

When using switch-over mode please note that in some switch-over operations the rotation direction command and the frequency setting value are "transferred" to the "new" operating mode (refer to Tab. 6-36 for details). When this happens the drive will run in the new operating mode even though it has not (yet) received any control commands.
It is extremely important to take this into account and take the necessary steps to ensure that performing these switch-over operations cannot cause hazardous conditions.

PU operation interlock (Pr. 79 = 7)

The PU operation interlock function is designed to forcibly change the operation mode to external operation mode when the PU operation interlock signal (X12) input turns off.

This function prevents the inverter from being inoperative by the external command if the mode is accidentally left unswitched from the PU operation mode.

Set "7" (PU operation interlock) in Pr. 79. For the terminal used for X12 signal (PU operation interlock signal) input, set "12" to any of Pr. 178 to Pr. 182 to assign the function. (Refer to section 6.9.1) When the X12 signal has not been assigned, the function of the MRS signal switches from MRS (output stop) to the PU operation interlock signal.

X12 (MRS) Signal	Function/Operation	
	Operation Mode	Parameter write
ON	Operation mode (external, PU, NET) switching enabled Output stop during external operation	Parameter write enabled (depending on Pr. 77 "Parameter write selection" and each parameter write condition (Refer to Tab. 6-1 for the parameter list.)
OFF	Forcibly switched to external operation mode Switching to PU or NET operation mode disabled	Parameter write disabled with exception of Pr. 79

Tab. 6-37: *Function of the X12 signal*

Function/operation changed by switching on-off the X12 (MRS) signal

Operation Condition		X12 (MRS) Signal	Operation Mode	Operating Status	Switching to PU, NET Operation Mode
Operation mode	Status				
PU/NET	During stop	ON → OFF ①	External ②	If external operation frequency setting and start signal are entered, operation is performed in that status.	Disallowed
	Running	ON → OFF ①			Disallowed
External	During stop	OFF → ON	External ②	Stop	Enabled
		ON → OFF			Disallowed
	Running	OFF → ON		During operation → output stop	Disallowed
		ON → OFF		Output stop → During operation	Disallowed

Tab. 6-38: *Switching the X12 (MRS) signal*

① The operation mode switches to external operation mode independently of whether the start signal (STF, STR) is on or off. Therefore, the motor is run in external operation mode when the X12 (MRS) signal is turned off with either of STF and STR on.

② At alarm occurrence, pressing the STOP/RESET key of the operation panel resets the inverter.

NOTES

If the X12 (MRS) signal is on, the operation mode cannot be switched to PU operation mode when the start signal (STF, STR) is on.

When the MRS signal is used as the PU interlock signal, the MRS signal serves as the normal MRS function (output stop) by turning on the MRS signal and then changing the Pr. 79 value to other than "7" in the PU operation mode. Also as soon as "7" is set in Pr. 79, the signal acts as the PU interlock signal.

When the MRS signal is used as the PU operation interlock signal, the logic of the signal is as set in Pr. 17. When Pr. 17 = 2, read ON as OFF and OFF as ON in the above explanation.

Changing the terminal assignment using Pr. 178 to Pr. 182 may affect the other functions. Please make setting after confirming the function of each terminal.

Switching of operation mode by external terminal (X16)

When external operation and operation from the operation panel are used together, use of the PU-external operation switching signal (X16) allows switching betwen the PU operation mode and external operation mode during a stop (during a motor stop, start command off).

When Pr. 79 = any of "0, 6, 7", the operation mode can be switched between the PU operation mode and external operation mode. (Pr. 79 = 6 switch-over mode can be changed during operation)

For the terminal used for X16 signal input, set "16" to any of Pr. 178 to Pr. 182 to assign the function.

Pr. 79		X16 Signal State Operation Mode		Remarks
		ON (external)	OFF (PU)	
0 (initial value)		External operation mode	PU operation mode	Can be switched to external, PU or NET operation mode
1		PU operation mode		Fixed to PU operation mode
2		External operation mode		Fixed to external operation mode (Can be switched to NET operation mode.)
3 / 4		External/PU combined operation mode		External/PU combined mode fixed
6		External operation mode	PU operation mode	Can be switched to external, PU or NET operation mode with operation continued
7	X12 (MRS) ON	External operation mode	PU operation mode	Can be switched to external, PU or NET operation mode. (Output stop in external operation mode.)
	X12 (MRS) OFF	External operation mode		Fixed to external operation mode (Forcibly switched to external operation mode.)

Tab. 6-39: *Operation mode switching by signal X16*

NOTES

The operation mode status changes depending on the setting of Pr. 340 "Communication start-up mode selection" and the ON/OFF states of the X65 and X66 signals. (For details, refer to page 6-182).

The priorities of Pr. 79, Pr. 340 and signals are:
Pr. 79 > X12 > X66 > X65 > X16 > Pr. 340

Changing the terminal assignment using Pr. 178 to Pr. 182 may affect the other functions. Please make setting after confirming the function of each terminal.

Switching of operation mode by external terminal (X65, X66)

When Pr. 79 = any of "0, 2, 6", the operation mode switching signals (X65, X66) can be used to change the PU or external operation mode to network operation mode during a stop (during a motor stop or start command off). (Pr. 79 = 6 switch-over mode can be changed during operation)

When switching from network operation mode to PU operation mode:

① Set Pr. 79 to "0" (initial value) or "6".

② Set "10" in Pr. 340.

③ Set "65" to any of Pr. 178 to Pr. 182 to assign the PU-NET operation switching signal (X65) to the external terminal.

④ The operation mode changes to PU operation mode when the X65 signal turns on, or to network operation mode when the X65 signal turns off.

Pr. 340	Pr. 79		X65 Signal State		Remarks
			ON (PU)	OFF (NET)	
10	0 (initial setting)		PU operation mode ①	NET operation mode ②	
	1		PU operation mode		Fixed to PU operation mode
	2		NET operation mode		Fixed to NET operation mode
	3 / 4		External/PU combined operation mode		External/PU combined mode fixed
	6		PU operation mode ①	NET operation mode ②	Operation mode can be switched with operation continued
	7	X12 (MRS) ON	Switching among the External and PU operation mode is enabled ②		Output stop in external operation mode
		X12 (MRS) OFF	External operation mode		Forcibly switched to external operation mode

Tab. 6-40: *Operation mode switching by signal X65*

① NET operation mode when the X66 signal is on.

② PU operation mode is selected when the X16 signal is off.
External operation mode when the X16 signal is on.

When switching from network operation mode to external operation mode:

① Set Pr. 79 to "0" (initial value), "2", "6" or "7". (At the Pr. 79 setting of "7", the operation mode can be switched when the X12 (MRS) signal turns on.)

② Set "0" (initial value) or "1" in Pr. 340.

③ Set "66" to any of Pr. 178 to Pr. 182 to assign the external-NET operation switching signal (X66) to the external terminal.

④ The operation mode changes to network operation mode when the X66 signal turns on, or to external operation mode when the X66 signal turns off.

Pr. 340	Pr. 79		X66-Signal		Remarks
			ON (PU)	OFF (NET)	
0 (initial value)/ 1	0 (initial value)		NET operation mode	External operation mode ①	
	1		PU operation mode		Fixed to PU operation mode
	2		NET operation mode	External operation mode	Cannot be switched to PU operation mode
	3 / 4		External/PU combined operation mode		External/PU combined mode fixed
	6		NET operation mode	External operation mode ①	Operation mode can be switched with operation continued
	7	X12 (MRS) ON	NET operation mode	External operation mode ①	Output stop in external operation mode
		X12 (MRS) OFF	External operation mode		Forcibly switched to external operation mode

Tab. 6-41: *Operation mode switching by signal X66*

① PU operation mode when the X16 signal is off. When the X65 signal has been assigned, the operation mode changes with the ON/OFF state of the X65 signal.

NOTES

The priorities of Pr. 79, Pr. 340 and signals are:
Pr. 79 > X12 > X66 > X65 > X16 > Pr. 340.

Changing the terminal assignment using Pr. 178 to Pr. 182 may affect the other functions. Please make setting after confirming the function of each terminal.

6.17.2 Operation mode at power on (Pr. 79, Pr. 340)

When power is switched on or when power comes back on after instantaneous power failure, the inverter can be started up in network operation mode.

After the inverter has started up in the network operation mode, parameter write and operation can be performed from a program.

Set this mode for communication operation using the inverter RS485 terminals.

Pr. No.	Name	Initial Value	Setting Range	Description
79	Operation mode selection	0	0–4/6/7	Select the operation mode. (Refer to page 6-175)
340	Communication start-up mode selection ①	0	0	As set in Pr. 79.
			1	Started in network operation mode.
			10	Started in network operation mode. Operation mode can be changed between the PU operation mode and network operation mode from the operation panel.

Parameters referred to	Refer to Section
79 Operation mode selection	6.17.1

The above parameters can be changed during a stop in any operation mode.

① The above parameter can be set when Pr. 160 = 0.

Specify operation mode at power on (Pr. 340)

Depending on the Pr. 79 and Pr. 340 settings, the operation mode at power on (reset) changes as described below:

Pr. 340	Pr. 79	Operation Mode at Power on, Power Restoration, Reset	Operation Mode Switching
0 (initial value)	0 (initial value)	External operation mode	Can be switched to external, PU or NET operation mode ①
	1	PU operation mode	Fixed to PU operation mode
	2	External operation moderieb	Can be switched to external or NET operation mode Switching to PU operation mode disabled
	3 / 4	External/PU combined operation mode	Operation mode switching disabled
	6	External operation mode	Can be switched to external, PU or NET operation mode with operation continued
	7	X12 (MRS) signal ON: External operation mode	Can be switched to external, PU or NET operation mode ①
		X12 (MRS) signal OFF: External operation mode	Fixed to external operation mode (Forcibly switched to external operation mode.)
1	0	NET operation mode	Same as when Pr. 340 = 0
	1	PU operation mode	
	2	NET operation mode	
	3 / 4	External/PU combined operation mode	
	6	NET operation mode	
	7	X12 (MRS) signal ON: NET operation mode	
		X12 (MRS) signal OFF: External operation mode	
10	0	NET operation mode	Can be switched to PU or NET operation mode ②
	1	PU operation mode	Same as when Pr. 340 = 0
	2	NET operation mode	Fixed to NET operation mode
	3 / 4	External/PU combined operation mode	Same as when Pr. 340 = 0
	6	NET operation mode	Can be switched to PU or NET operation mode with operation continued ②
	7	External operation mode	Same as when Pr. 340 = 0

Tab. 6-42: *Operation mode of the inverter at power on*

① The operation mode cannot be switched directly between the PU operation mode and network operation mode.

② Operation mode can be changed between the PU operation mode and network operation mode with th PU/EXT key of the operation panel and X65 signal.

6.17.3 Start command source and frequency command source during communication operation (Pr. 338, Pr. 339, Pr. 551)

When the RS485 communication with the PU connector or communication option is used, the external start command and frequency command can be made valid. Command source in the PU operation mode can be selected.
From the communication device, parameter unit, etc. which have command source, parameter write or start command can be executed. Parameter read or monitoring can be executed in any operation mode.

Pr. No.	Name	Initial Value	Setting Range	Description
338	Communication operation command source	0	0	Start command source communication
			1	Start command source external
339	Communication speed command source	0	0	Frequency command source communication
			1	Frequency command source external (Frequency command from communication is valid, frequency command from terminal 2 isin valid)
			2	Frequency command source external (Frequency command from communication is valid, frequency command from terminal 2 is invalid)
551	PU mode operation command source selection ①	9999	2	Selects the PU connector as the PU operation mode control source
			4	Selects the operation panel as the PU operation mode control source.
			9999	PU automatic recognition Normally, operation panel is the command source. When the parameter unit is connected to the PU connector, PU is the command source.

Parameters referred to		Refer to Section
59	Remote function selection	6.5.3
79	Operation mode selection	6.17.1

The above parameters can be set when Pr. 160 = 0.

① Pr. 551 is always write-enabled.

Selects the command source of the PU operation mode (Pr. 551)

Any of the operation panel or PU connector can be specified as the command source in the PU operation mode.
In the PU operation mode, set Pr. 551 to "2" when executing parameter write, start command or frequency command during the RS485 communication with PU connector.

Pr. 551	Command Source			Remarks
	Operation Panel	Parameter Unit	RS485 Communication	
2	—	PU	PU ①	Switching to NET operation mode disabled
4	PU	—	NET	
9999 (initial value)	PU ②	PU ②	NET	

Tab. 6-43: *Parameter 551 settings*

① The Modbus-RTU protocol cannot be used in the PU operation mode. When using the Modbus-RTU protocol, set Pr. 551 ≠ "2".

② When Pr. 551 = "9999", the priorities of the PU control source are: parameter unit (FR-PU04/FR-PU07) > operation panel.

NOTES

When performing the RS485 communication with the PU connector when Pr. 551 = 9999, PU mode command source does not automatically change to the PU connector.

When "2" (PU mode PU connector) is set in Pr. 551, the operation mode cannot be switched to the network operation mode.

Changed setting value is made valid when powering on or resetting the inverter.

The Modbus-RTU protocol cannot be used in the PU operation mode. Select network operation mode (NET mode command source).

All of the operation mode indicator (PU EXT NET) of the operation panel turns OFF when command source is not operation panel.

Controllability through communication

Operation Location	Condition (Pr. 551)	Command	Operation Mode				
			PU Operation	External Operation	External/PU combined Operation Mode 1 (Pr. 79 = 3)	External/PU combined Operation Mode 2 (Pr. 79 = 4)	NET Operation
Control by RS485 communication from PU connector	2 (PU connector)	Run command (start)	✔	—	—	✔	—
		Run command (stop)	✔	◇ ③	◇ ③	✔	—
		Running frequency setting	✔	—	✔	—	—
		Parameter write	✔ ④	— ⑤	✔ ④	✔ ④	— ⑤
		Inverter reset	✔	✔	✔	✔	—
	Other than the above	Run command (start)	—	—	—	—	✔ ①
		Run command (stop)	—	—	—	—	✔ ①
		Running frequency setting	—	—	—	—	✔ ①
		Parameter write	— ⑤	— ⑤	— ⑤	— ⑤	✔ ④
		Inverter reset	—	—	—	—	✔ ②
Control circuit external terminals	—	Inverter reset	✔	✔	✔	✔	✔
		Run command (start, stop)	—	✔	✔	—	— ①
		Running frequency setting	—	✔	◇ ⑥	✔	— ①

Tab. 6-44: *Functions in the single operation modes*

✔: enabled
—: not enabled
◇: some are enabled

① As set in Pr. 338 "Communication operation command source" and Pr. 339 "Communication speed command source".

② At occurrence of RS485 communication error, the inverter cannot be reset from the computer.

③ Enabled only when stopped by the PU. At a PU stop, "PS" is displayed on the operation panel. As set in Pr. 75 "Reset selection/disconnected PU detection/PU stop selection". (Refer to section 6.16.1.)

④ Some parameters may be write-disabled according to the Pr. 77 "Parameter write selection" setting and operating status. (Refer to section 6.16.2).

⑤ Some parameters are write-enabled independently of the operation mode and command source presence/absence. When Pr. 77 = 2, write is enabled. (Refer to Tab. 6-1 for the parameter list.) Parameter clear is disabled.

⑥ Available with multi-speed setting and terminal 4-5 (valid when AU signal is ON).

Operation at alarm occurrence

Alarm Definition	Condition (Pr. 551)	Operation Mode				
		PU Operation	External Operation	External/PU combined Operation Mode 1 (Pr. 79 = 3)	External/PU combined Operation Mode 2 (Pr. 79 = 4)	NET Operation
Inverter fault	—	Stop				
PU disconnection of the PU connector	2 (PU connector) 9999 (automatic recognition)	Stop/continued ① ③				
	Other than the above	Stop/continued ①				
RS485 communication error of the PU connector	2 (PU connector)	Stop/ continued ②	Continued		Stop/ continued ②	—
	Other than the above	Continued				Stop/ continued ②

Tab. 6-45: *Operation at alarm occurrence*

① Can be selected using Pr. 75 "Reset selection/disconnected PU detection/PU stop selection"

② Can be selected using Pr. 122 "PU communication check time interval".

③ In the PU JOG operation mode, operation is always stopped when the PU is disconnected. Whether fault (E.PUE) occurrence is allowed or not is as set in Pr. 75 "Reset selection/ disconnected PU detection/PU stop selection".

Selection of control source in network operation mode (Pr. 338, Pr. 339)

As control sources, there are the operation command source that controls the signals related to the inverter start command and function selection and the speed command source that controls the signals related to frequency setting.

In network operation mode, the commands from the external terminals and communication (PU connector or communication option) are as listed below.

Operation Location Selection			**Communication Operation Command Source (Pr. 338)**		**0: NET**			**1: External**			**Remarks**
			Communication Speed Command Source (Pr. 339)		**0: NET**	**1: External**	**2: External**	**0: NET**	**1: External**	**2: External**	
Fixed function (Terminal-equivalent function)			Running frequency from communication		NET	—	NET	NET	—	NET	
			Terminal 2		—	External	—	—	External	—	
			Terminal 4		—	External		—	External		
Selective function	Pr. 178 to Pr. 182 setting	0	RL	Low speed operation command/remote setting clear	NET	External		NET	External		Pr. 59 = 0 (multi-speeds) Pr. 59 ≠ 0 (remote)
		1	RM	Middle-speed operation command/remote setting deceleration	NET	External		NET	External		
		2	RH	High speed operation command/remote setting acceleration	NET	External		NET	External		
		3	RT	Second function selection	NET			External			
		4	AU	Terminal 4 input selection	—	Combined		—	Combined		
		5	JOG	Jog operation selection	—			External			
		7	OH	External thermal relay input	External						
		8	REX	Fifteen speed selection	NET	External		NET	External		Pr. 59 = 0 (multi-speeds)
		10	X10	Inverter operation enable signal	External						
		12	X12	PU operation external interlock	External						
		14	X14	PID control valid terminal	NET	External		NET	External		
		16	X16	PU-external operation switchover	External						
		18	X18	V/f switching	NET			External			

Tab. 6-46: *Writing operation and speed commands (1)*

Operation Location Selection			Communication Operation Command Source (Pr. 338)		0: NET			1: External			Remarks
			Communication Speed Command Source (Pr. 339)		0: NET	1: External	2: External	0: NET	1: External	2: External	
Selective function	Pr. 178 to Pr. 182 setting	24	MRS	Output stop	Combined			External			Pr. 79 ≠ 7
				PU operation interlock	External						Pr. 79 = 7 (When X12 signal is not assigned)
		25	STOP	Start self-holding selection	—			External			
		37	X37	Traverse function selection	NET			External			
		60	STF	Forward rotation command	NET			External			
		61	STR	Reverse rotation command	NET			External			
		62	RES	Reset	External						
		65	X65	PU-NET operation switchover	External						
		66	X66	External-NET operation switchover	External						
		67	X67	Command source switchover	External						

Tab. 6-46: *Writing operation and speed commands (2)*

Explanation of table:

External: Operation is valid only from external terminal signal.
NET: Control only from communication is valid.
Combined: Operation is valid from either of external terminal and communication.
—: Operation is invalid from either of external terminal and communication.

NOTES

The control source of communication is as set in Pr. 551.

The Pr. 338 and Pr. 339 settings can be changed while the inverter is running when Pr. 77 = "2". Note that the setting change is reflected after the inverter has stopped. Until the inverter has stopped, communication operation command source and communication speed command source before the setting change are valid.

Switching of command source by external terminal (X67)

In the network operation mode, the command source switching signal (X67) can be used to switch the start command source and speed command source.

Set "67" to any of Pr. 178 to Pr. 182 to assign the X67 signal to the control terminal.

When the X67 signal is off, the start command source and speed command source are control terminal.

X67 Signal State	Operation Command Source	Speed Command Source
No signal assignment	According to Pr. 338	According to Pr. 339
ON		
OFF	Operation is valid only from external terminal signal.	

Tab. 6-47: *Switching of command source by the signal X67*

NOTES

The ON/OFF state of the X67 signal is reflected only during a stop. It is reflected after a stop when the terminal is switched during operation.

When the X67 signal is off, a reset via communication is disabled.

Changing the terminal assignment using Pr. 178 to Pr. 182 may affect the other functions. Please make setting after confirming the function of each terminal.

6.18 Communication operation and settings

Purpose	Parameters that must be set		Refer to Section
Communication operation from PU connector	Initial setting of computer link communication (PU connector)	Pr. 117–Pr. 124	6.18.2
	Modbus-RTU communication specification	Pr. 117, Pr. 118, Pr. 120, Pr. 122, Pr. 343, Pr. 502 Pr. 549	6.18.6
Restrictions on parameter write through communication	Communication E²PROM write selection	Pr. 342	6.18.4

6.18.1 PU connector

Using the PU connector, you can perform communication operation from a personal computer etc. When the PU connector is connected with a personal, FA or other computer by a communication cable, a user program can run and monitor the inverter or read and write to parameters.

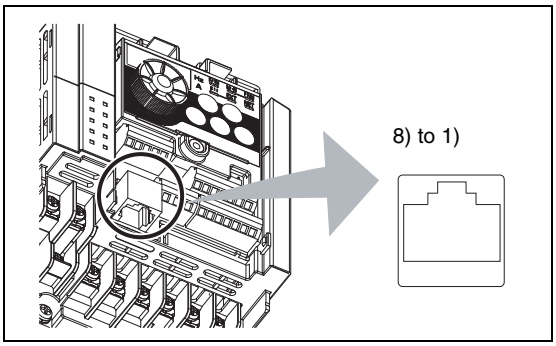

Fig. 6-96: *PU connector pin-outs*

Pin Number	Name	Description
1)	SG	Earth (Ground) (connected to terminal 5)
2)	—	Operation panel power supply
3)	RDA	Inverter receive+
4)	SDB	Inverter send–
5)	SDA	Inverter send+
6)	RDB	Inverter receive–
7)	SG	Earth (Ground) (connected to terminal 5
8)	—	Operation panel power supply

Tab. 6-48: *PU connector (terminal description)*

NOTES

Pins No. 2) and 8) provide power to the operation panel or parameter unit. Do not use these pins for RS485 communication.

Do not connect the PU connector to the computer's LAN board, FAX modem socket or telephone modular connector. The product could be damaged due to differences in electrical specifications.

PU connector communication system configuration and wiring

- Connecting the PU to the inverter

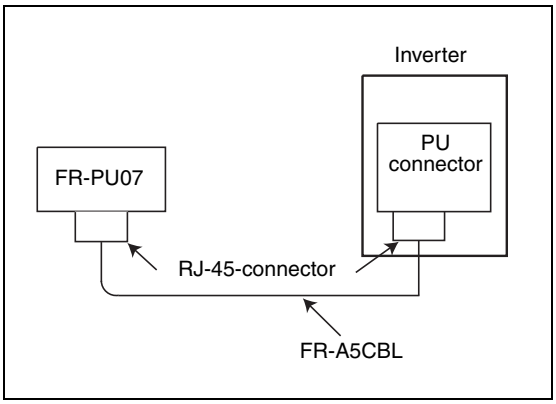

I001829E

Fig. 6-97:
Connecting the PU to the PU connector

- Connecting a computer to a single inverter

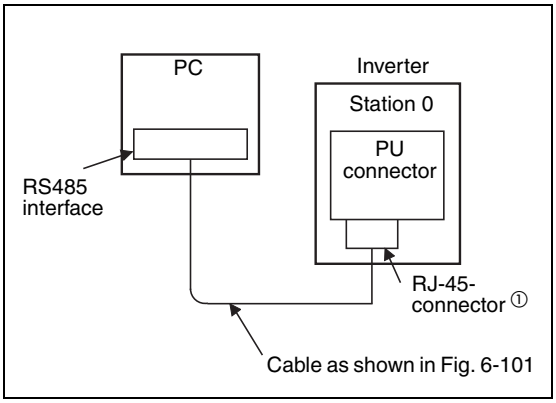

I001211E

Fig. 6-98:
Connecting the RS485 interface of a PC to the PU connector

① Pins No. 2) and 8) provide power to the operation panel or parameter unit. Do not use these pins for RS485 communication.

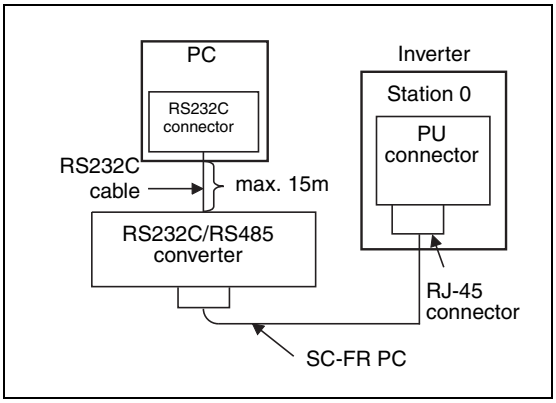

I001212E

Fig. 6-99:
Connecting the RS232C interface of a PC to the PU connector

● Combination of computer and multiple inverters

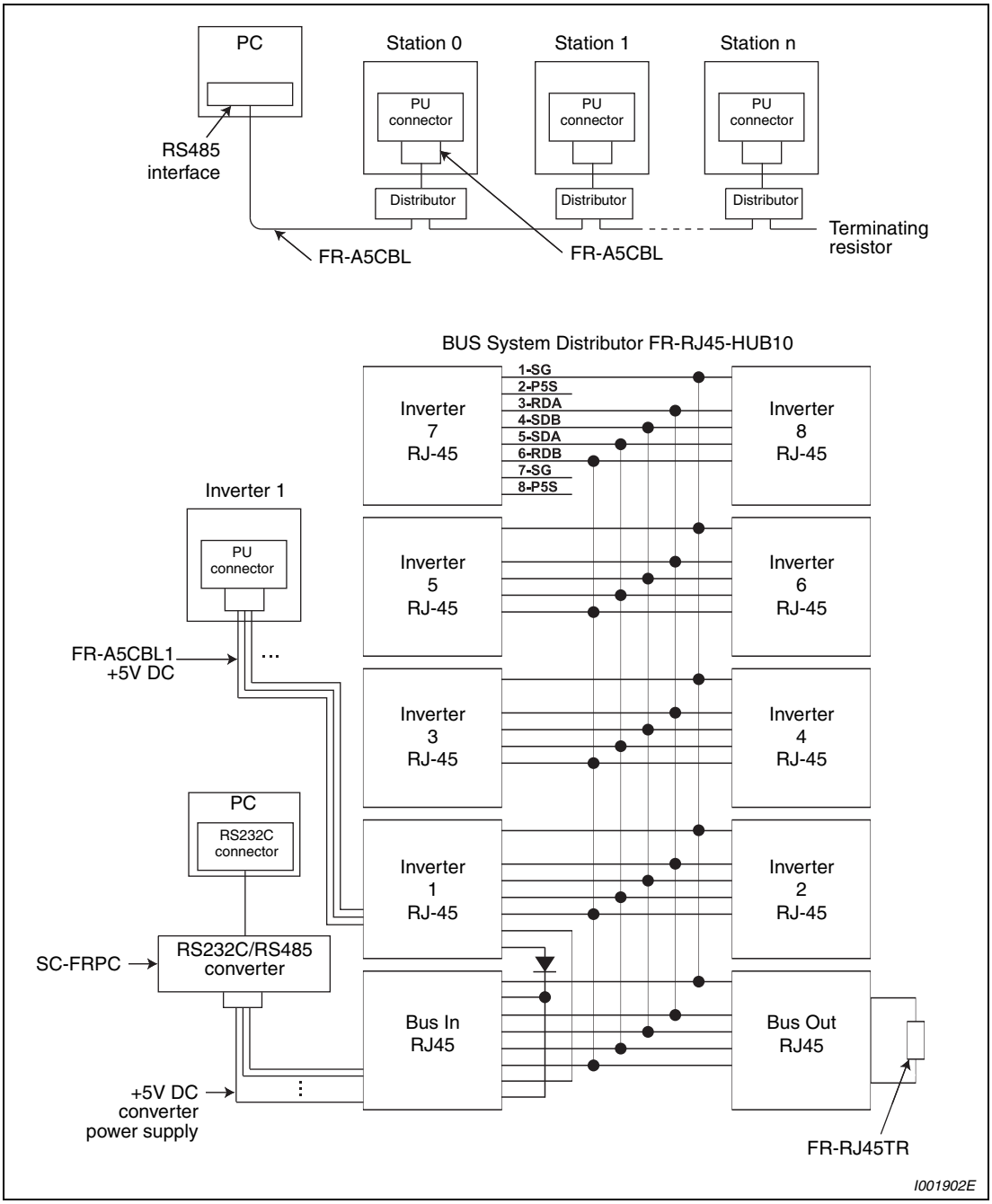

Fig. 6-100: *Connection of a computer to several inverters*

Connection with RS485 computer

- Wiring of one RS485 computer and one inverter

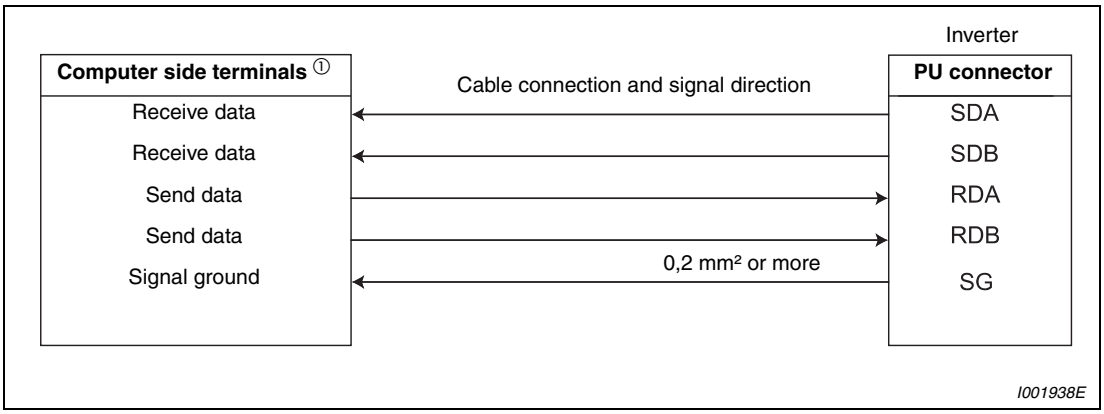

Fig. 6-101: *Connection to an inverter*

- Wiring of one RS485 computer and "n" inverters (several inverters)

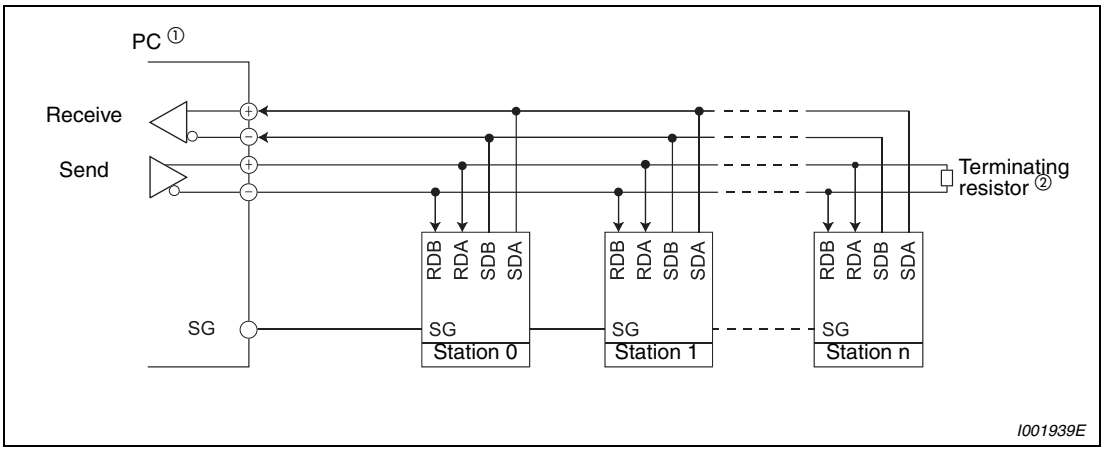

Fig. 6-102: *Connection to several inverter*

① Make connection in accordance with the instruction manual of the computer to be used with. Fully check the terminal numbers of the computer since they vary with the model.

② The inverters may be affected by reflection depending on the transmission speed or transmission distance. If this reflection hinders communication, provide a terminating resistor. If the PU connector is used to make a connection, use a distributor since a terminating resistor cannot be fitted. Connect the terminating resistor to only the inverter remotest from the computer. (Terminating resistor: 100Ω)

NOTE Do not use pins No. 2, 8 of the FR-A5CBL cable. (Refer to page 6-193.)

Two-wire type connection

If the computer is 2-wire type, a connection from the inverter can be changed to 2-wire type by passing wires across reception terminals and transmission terminals of the PU connector pin.

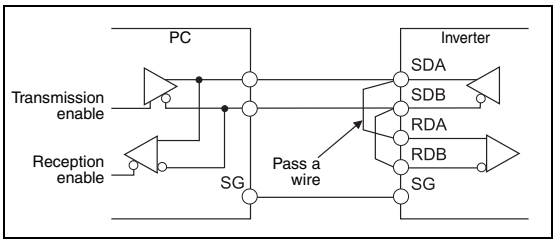

Fig. 6-103:
Two-wire type connection

NOTES

A program should be created so that transmission is disabled (receiving state) when the computer is not sending and reception is disabled (sending state) during sending to prevent the computer from receiving its own data.

The passed wiring length should be as short as possible.

6.18.2 Initial settings and specifications of RS485 communication (Pr. 117 to Pr. 120, Pr. 123, Pr. 124, Pr. 549)

Used to perform required settings for RS485 communication between the inverter and personal computer. Use PU connector of the inverter for communication.

- You can perform parameter setting, monitoring, etc. using Mitsubishi inverter protocol or Modbus-RTU protocol.
- To make communication between the personal computer and inverter, initialization of the communication specifications must be made to the inverter. Data communication cannot be made if the initial settings are not made or there is any setting error.

PU connector communication related parameter

Pr. No.	Name	Initial Value	Setting Range	Description	
117	PU communication station number	0	0–31 (0–247) ①	Specify the inverter station number. Set the inverter station numbers when two or more inverters are connected to one personal computer.	
118	PU communication speed	192	48/96/ 192/384	Set the communication speed. The setting value × 100 equals the communication speed. For example, the communication speed is 19200bps when the setting value is "192".	
119	PU communication stop bit length	1		**Stop bit length**	**Data length**
			0	1bit	8bit
			1	2bit	
			10	1bit	7bit
			11	2bit	
120	PU communication parity check	2	0	Without parity check	
			1	With odd parity check	
			2	With even parity check	
123	PU communication waiting time setting	9999	0–150 ms	Set the waiting time between data transmission to the inverter and response.	
			9999	Set with communication data.	
124	PU communication CR/LF presence/absence selection	1	0	Without CR/LF	
			1	With CR	
			2	With CR/LF	
549	Protocol selection	0	0	Mitsubishi inverter (computer link operation) protocol	
			1	Modbus-RTU protocol	

Parameters referred to	Refer to Section
—	

The above parameters can be set when Pr. 160 = 0.

① When "1" (Modbus-RTU protocol) is set in Pr. 549, the setting range within parantheses is applied.

NOTE Always reset the inverter after making the initial settings of the parameters. After you have changed the communication-related parameters, communication cannot be made until the inverter is reset.

6.18.3 Operation selection at communication error occurrence (Pr. 121, Pr. 122, Pr. 502)

Pr. No.	Name	Initial Value	Setting Range	Description
121	Number of PU communication retries	1	0–10	Number of retries at data receive error occurrence If the number of consecutive errors exceeds the permissible value, the inverter will come to trip (depends on Pr. 502). Valid only Mitsubishi inverter (computer link operation) protocol
			9999	If a communication error occurs, the inverter will not come to trip.
122	PU communication check time interval	9999	0	RS485 communication can be made. Note that a communication fault (E.PUE) occurs as soon as the inverter is switched to the operation mode (network operation mode in the initial setting) with the control.
			0.1 – 999.8 s	Communication check (signal loss detection) time intervalIf a no-communication state persists for longer than the permissible time, the inverter will come to trip (depends on Pr. 502).
			9999	No communication check (signal loss detection)
502	Stop mode selection at communication error	0	0	At fault occurrence: Coasts to stop Indication: E.PUE Fault output: Output At fault removal: Stop (E.PUE)
			1	At fault occurrence: Decelerates to stop Indication: After stop E.PUE Fault output: Output after stop At fault removal: Stop (E.PUE)
			2	At fault occurrence: Decelerates to stop Indication: After stop E.PUE Fault output: Without output At fault removal: Automatic restart functions

Parameters referred to		Refer to Section
7	Acceleration time	6.6.1
8	Deceleration time	6.6.1
190/192/197	Output terminal function selection	6.9.5

The above parameters can be set when Pr. 160 = 0.

Retry count setting (Pr.121)

Set the permissible number of retries at data receive error occurrence. (Refer to page 6-211 for data receive error for retry.)

When data receive errors occur consecutively and exceed the permissible number of retries set, an inverter trips (E.PUE) and a motor stops (as set in Pr. 502).

When "9999" is set, an inverter fault is not provided even if data receive error occurs but an alarm signal (LF) is output. For the terminal used for the LF signal output, assign the function by setting "98" (positive logic) or "198" (negative logic) in any of Pr. 190, Pr. 192 or Pr. 197.

Example ▽ PU connector communication at different settings of parameter 121

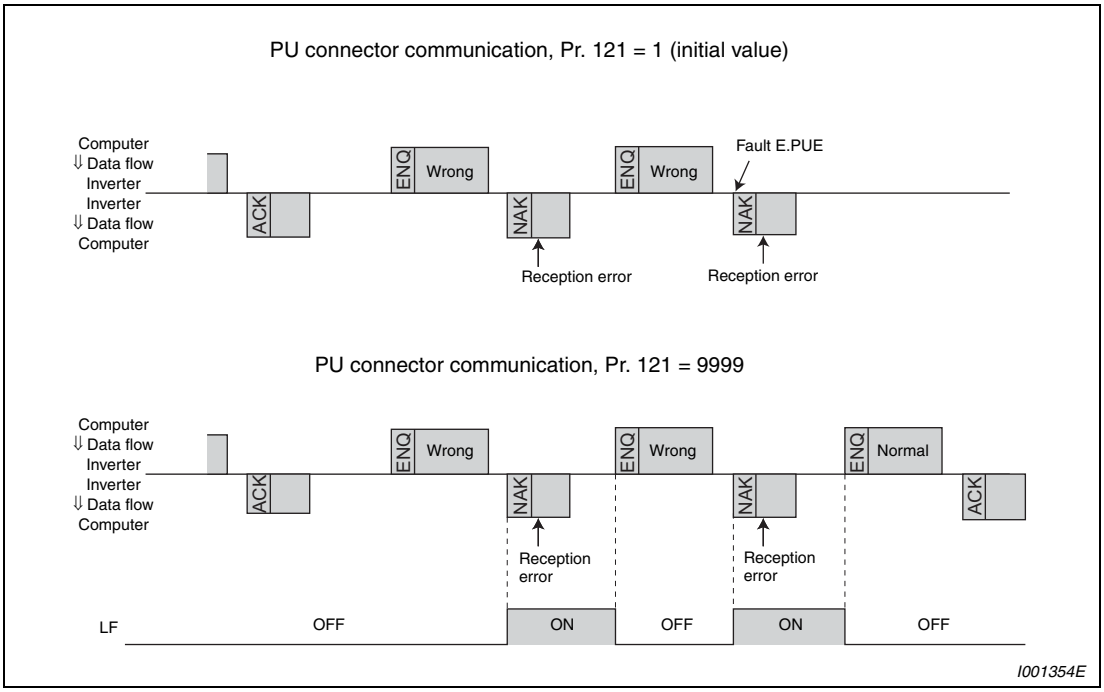

Fig. 6-104: *Data transmission error*

△

NOTE

Pr. 121 is valid only when Mitsubishi inverter (computer link operation) protocol is selected. Pr. 121 is not valid when Modbus-RTU communication protocol is selected.

Signal loss detection (Pr. 122)

If a signal loss (communication stop) is detected between the inverter and master as a result of a signal loss detection, a communication fault (E.PUE) occurs and the inverter trips (as set in Pr. 502).

When the setting is "9999" (initial value), communication check (signal loss detection) is not made.

When the setting value is "0" (initial value), RS485 communication can be made. However, a communication fault (E.PUE) occurs as soon as the inverter is switched to the operation mode (network operation mode in the initial setting) with the control.

A signal loss detection is made when the setting is any of "0.1s to 999.8s". To make a signal loss detection, it is necessary to send data (refer to Mitsubishi inverter protcol control code (page 6-209), Modbus-RTU comunciation protocol (page 6-226)) from the computer within the communication check time interval. (The inverter makes communication check (clearing of communication check counter) regardless of the station number setting of the data sent from the master).

Communication check is made from the first communication in the operation mode with control source valid (network operation mode in the initial setting).

Example ▽ PU connector communication, Pr. 122 = 0.1–999.8s

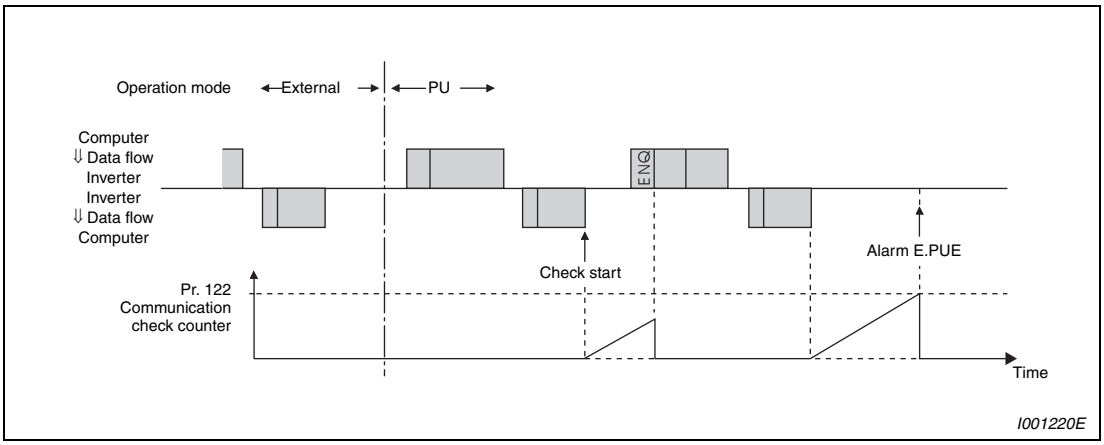

Fig. 6-105: *Signal loss detection*

△

NOTES

Always set the communication check time interval before starting operation to prevent hazardous conditions.

Data communication is not started automatically but is made only once when the computer provides a communication request. If communication is disabled during operation due to signal cable breakage etc., the inverter cannot be stopped. When the communication check time interval has elapsed, the inverter will come to an alarm stop (E.PUE). The inverter can be coasted to a stop by switching on its RES signal or by switching power off.

If communication is broken due to signal cable breakage, computer fault etc., the inverter does not detect such a fault. This should be fully noted.

Stop operation selection at occurrence of communication fault (Pr. 502)

Stop operation when retry count excess (Mitsubishi inverter protocol only) or signal loss detection error occurs can be selected.

Pr. 502	Operation	Indication	Fault Output
0 (initial value)	Coasts to stop.	E. PUE lit	Provided
1	Decelerates to stop	E. PUE lit after stop	Provided after stop
2			Not provided

Tab. 6-49: *Operation at fault occurrence*

Pr. 502	Operation	Indication	Fault Output
0 (initial value)	Kept stopped	E.PUE	Kept provided
1			
2	Automatic restart functions	Normal display	Not provided

Tab. 6-50: *Operation at fault removal*

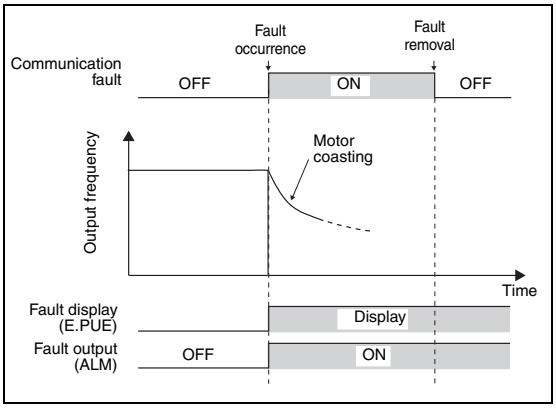

Fig. 6-106:
Operation when Pr. 502 setting is "0" (initial value)

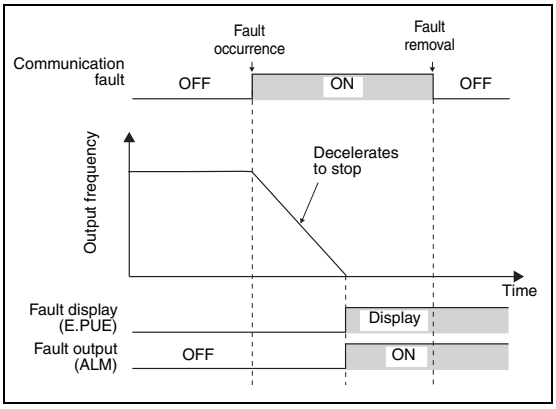

Fig. 6-107:
Operation when Pr. 502 setting is "1"

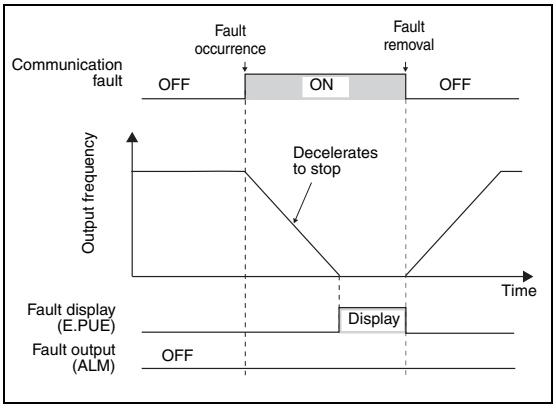

I001836E

Fig. 6-108:
Operation when Pr. 502 setting is "2"

NOTES

The fault output indicates fault output signal (ALM signal) or alarm bit output.

When the setting was made to provide a fault output, the fault description is stored into the faults history. (The fault description is written to the faults history when a fault output is provided.) When no fault output is provided, the fault definition overwrites the fault indication of the faults history temporarily, but is not stored. After the fault is removed, the fault indication returns to the ordinary monitor, and the faults history returns to the preceding fault indication.

When the Pr. 502 setting is "1 or 2", the deceleration time is the ordinary deceleration time setting (e.g. Pr. 8, Pr. 44, Pr. 45). In addition, acceleration time for restart is the normal acceleration time (e.g. Pr. 7, Pr. 44).

When "2" is set in Pr. 502, run command/speed command at restarting follows the command before an fault occurrence.

When "2" is set in Pr. 502 at occurrence of a communication error and the error is removed during deceleration, the inverter accelerates again at that point.

6.18.4 Communication E²PROM write selection (Pr. 342)

When parameter write is performed from the inverter PU connector parameters storage device can be changed from E²PROM + RAM to RAM only. When changing the parameter values frequently, set "1" in Pr. 342 to write them to the RAM only. The life of the E²PROM will be shorter if parameter write is performed frequently with the setting unchanged from "0 (initial value)" (E²PROM write).

Pr. No.	Name	Initial Value	Setting Range	Description
342	Communication E²PROM write selection	0	0	Parameter values written by communication are written to the E²PROM and RAM.
			1	Parameter values written by communication are written to the RAM.

Parameters referred to	Refer to Section
—	

The above parameter can be set when Pr. 160 = 0.

NOTE

When "1" (write to RAM only) is set in Pr. 342, powering off the inverter will erase the changed parameter values. Therefore, the parameter values available when power is switched on again are the values stored in E²PROM previously.

6.18.5 Mitsubishi inverter protocol (computer link communication)

You can perform parameter setting, monitor, etc. from the PU connector of the inverter using the Mitsubishi inverter protocol (computer link communication).

Communication specifications

Item		Description	Related Parameters
Communication protocol		Mitsubishi protocol (computer link)	Pr. 549
Conforming standard		EIA-485 (RS485)	—
Number of inverters connected		1 : N (maximum 32 units), setting is 0 to 31 stations	Pr. 117
Communication speed	PU connector	Selected from among 4800/9600/19200 and 38400bps	Pr. 118
Control protocol		Asynchronous system	—
Communication method		Half-duplex system	—
Communication specifications	Character system	ASCII (7 bits or 8 bits can be selected)	Pr. 119
	Start bit	1 bit	—
	Stop bit length	1 bit or 2 bits can be selected	Pr. 119
	Parity check	Check (with even or odd parity) or no check can be selected	Pr. 120
	Error check	Sum code check	—
	Terminator	CR/LF (presence or absence can be selected)	Pr. 124
Waiting time setting		Selectable between presence and absence	Pr. 123

Tab. 6-51: *Communication specifications*

Communication procedure

Data communication between the computer and inverter is made in the following procedure:

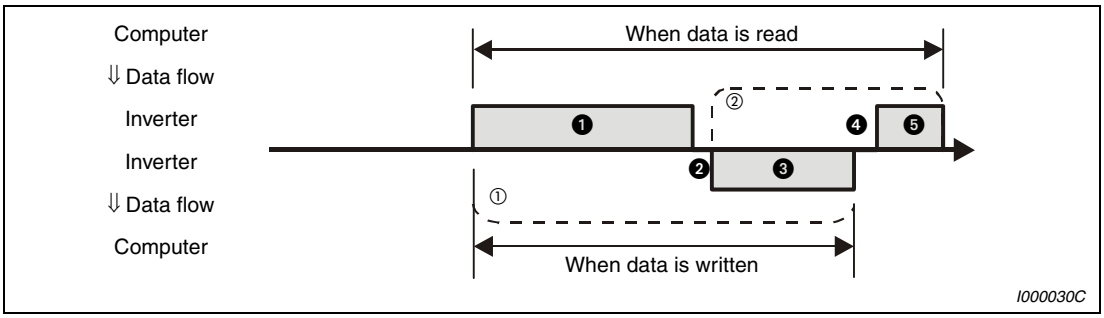

Fig. 6-109: *Schematic diagram of data exchange*

① If a data error is detected and a retry must be made, execute retry operation with the user program. The inverter comes to an alarm stop if the number of consecutive retries exceeds the parameter setting.

② On receipt of a data error occurrence, the inverter returns "reply data ❸" to the computer again. The inverter comes to an alarm stop if the number of consecutive data errors reaches or exceeds the parameter setting.

Communication operation presence/absence and data format types

Data communication between the computer and inverter is made in ASCII code (hexadecimal code). Data is automatically converted to ASCII format when it is exchanged between an external computer and the frequency inverter. In the following table the different data formats are referred to with the letters A–F. The corresponding formats are explained in the next section.

No.	Operation		Run Command	Running Frequency	Multi Command	Parameter Write	Inverter Reset	Monitor	Parameter Read
❶	Communication request is sent to the inverter in accordance with the user program in the computer.		A1	A A2 ③	A3	A A2 ③	A	B	B
❷	The inverter will not send data unless requested.		Present	Present	Present	Present	Absent	Present	Present
❸	Reply data from the inverter (Data ❶) is checked for error)	No error ① (Request accepted)	C	C	C1 ④	C	C ②	E E1 E2 E3 ③	E E2 ③
		With error (Request rejected)	D	D	D	D	D ②	D	D
❹	Computer processing delay time		10ms or more						
❺	Answer from computer in response to reply data ❸ (Data ❸) is checked for error)	No error ① (No inverter processing)	Absent	Absent	Absent (C)	Absent	Absent	Absent (C)	Absent (C)
		With error (Inverter reoutputs ❸)	Absent	Absent	F	Absent	Absent	F	F

Tab. 6-52: *Communication and data format*

① In the communication request data from the computer to the inverter, 10ms or more is also required after "no data error (ACK)". (Refer to page 6-211.)

② The inverter response to the inverter reset request can be selected. (Refer to page 6-215, Tab. 6-57.)

③ When any of "0.01 to 9998" is set in Pr. 37 and "01" in instruction code HFF sets data format to "A2" or "E2". In addition, data format is always A2 and E2 for read or write of Pr. 37.

④ At mode error, and data range error, C1 data contains an error code. (Refer to page 6-223) Except for those errors, the error is returned with data format D.

● Data writing format

Communication request data from the computer to the inverter ❶

Format	Number of Characters																		
	1	2	3	4	5	6	7	8	9	10	11	12	13	14	15	16	17	18	19
A	ENQ ①	Inverter station number ②		Instruction code		③	Data				Sum check		④						
A1	ENQ ①	Inverter station number ②		Instruction code		③	Data		Sum check		④								
A2	ENQ ①	Inverter station number ②		Instruction code		③	Data						Sum check		④				
A3	ENQ ①	Inverter station number ②		Instruction code		③	Send data type	Recei-ve data type	Data 1				Data 2				Sum check		④

Reply data from the inverter to the computer ❸ (no data error detected)

Format	Number of Characters																		
	1	2	3	4	5	6	7	8	9	10	11	12	13	14	15	16	17	18	19
C	ACK ①	Inverter station number ②		④															
C1	ACK ①	Inverter station number ②		Send data type	Recei ve data type	Error code 1	Error code 2	Data 1				Data 2				EXT ①	Sum check		④

Reply data from the inverter to the computer ❸ (data error detected)

Format	Number of Characters				
	1	2	3	4	5
D	NAK ①	Inverter station number ②		Error code	④

① Indicate a control code (Refer to Tab. 6-53.)

② Specify the inverter station numbers between H00 and H1F (stations 0 to 31) in hexadecimal.

③ Set waiting time.
When Pr. 123 "Waiting time setting" ≠ 9999, create the communication request data without "waiting time" in the data format. The number of characters decreases by 1.

④ CR, LF code
When data is transmitted from the computer to the inverter, codes CR (carriage return) and LF (line feed) are automatically set at the end of a data group on some computers. In this case, setting must also be made on the inverter according to the computer. Whether the CR and LF codes will be present or absent can be selected using Pr. 124 "CR, LF selection".

● Data reading format

Communication request data from the computer to the inverter ❶

Format	Number of Characters								
	1	2	3	4	5	6	7	8	9
B	ENQ ①	Inverter station number ②		Instruction code		Waiting time ③	Sum check		④

Reply data from the inverter to the computer ❸ (no data error detected)

Format	Number of Characters												
	1	2	3	4	5	6	7	8	9	10	11	12	13
E	STX ①	Inverter station number ②		Read data				ETX ①	Sum check		④		
E1	STX ①	Inverter station number ②		Read data		ETX ①	Sum check		④				
E2	STX ①	Inverter station number ②		Read data						ETX ①	Sum check		④

Format	Number of Characters							
	1	2	3	4 to 23	24	25	26	27
E3	STX ①	Inverter station number ②		Read data (Inverter type information)	ETX ①	Sum check		④

Reply data from the inverter to the computer ❸ (data error detected)

Format	Number of Characters				
	1	2	3	4	5
D	NAK ①	Inverter station number ②		Error code	④

Send data from the computer to the inverter during data read ❺

Format	Number of Characters			
	1	2	3	4
C (No data error detected)	ACK ①	Inverter station number ②		④
F (Data error detected)	NAK ①	Inverter station number ②		④

① Indicate a control code (Refer to Tab. 6-53.)

② Specify the inverter station numbers between H00 and H1F (stations 0 to 31) in hexadecimal.

③ Set waiting time.
When Pr. 123 "Waiting time setting" ≠ 9999, create the communication request data without "waiting time" in the data format. The number of characters decreases by 1.

④ CR, LF code
When data is transmitted from the computer to the inverter, codes CR (carriage return) and LF (line feed) are automatically set at the end of a data group on some computers. In this case, setting must also be made on the inverter according to the computer. Whether the CR and LF codes will be present or absent can be selected using Pr. 124 "CR, LF selection"

Data definitions

- Control codes

Signal Name	ASCII Code	Description
STX	H02	Start Of Text (start of data)
ETX	H03	End Of Text (end of data)
ENQ	H05	Enquiry (communication request)
ACK	H06	Acknowledge (no data error detected)
LF	H0A	Line Feed
CR	H0D	Carriage Return
NAK	H15	Negative Acknowledge (data error detected)

Tab. 6-53: *Control codes*

- Inverter station number
  Specify the station number of the inverter which communicates with the computer.
  The inverter station numbers are specified between H00 and H1F (stations 0 to 31) in hexadecimal.
- Instruction code
  Specify the processing request, e.g. operation or monitoring, given by the computer to the inverter. Hence, the inverter can be run and monitored in various ways by specifying the instruction code as appropriate. (Refer to the appendix.)
- Data
  Indicates the data such as frequency and parameters transferred to and from the inverter. The definitions and ranges of set data are determined in accordance with the instruction codes. (Refer to the appendix.)
- Waiting time
  Specify the waiting time between the receipt of data at the inverter from the computer and the transmission of reply data. Set the waiting time in accordance with the response time of the computer between 0 and 150ms in 10ms increments (e.g. 1 = 10ms, 2 = 20ms).

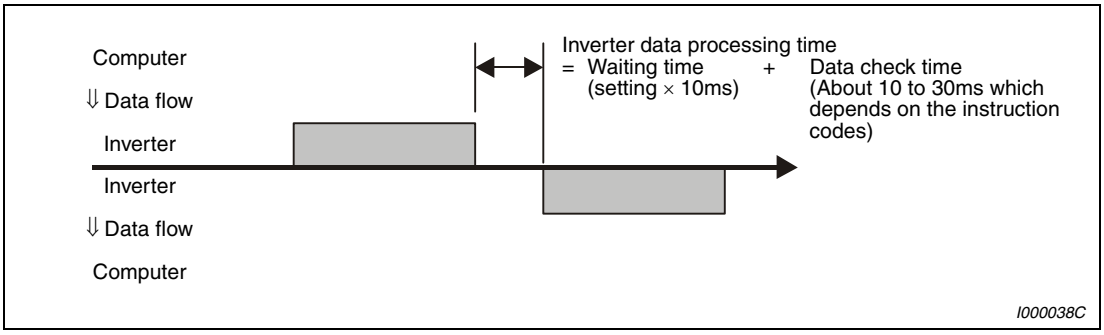

Fig. 6-110: *Specifying the waiting time*

NOTES

When Pr. 123 "Waiting time setting" ≠ 9999, create the communication request data without "waiting time" in the data format. (The number of characters decreases by 1.)

The data check time changes depending on the instruction code. (Refer to page 6-212).

● Sum check code
The sum check code is 2-digit ASCII (hexadecimal) representing the lower 1 byte (8 bits) of the sum (binary) derived from the checked ASCII data.

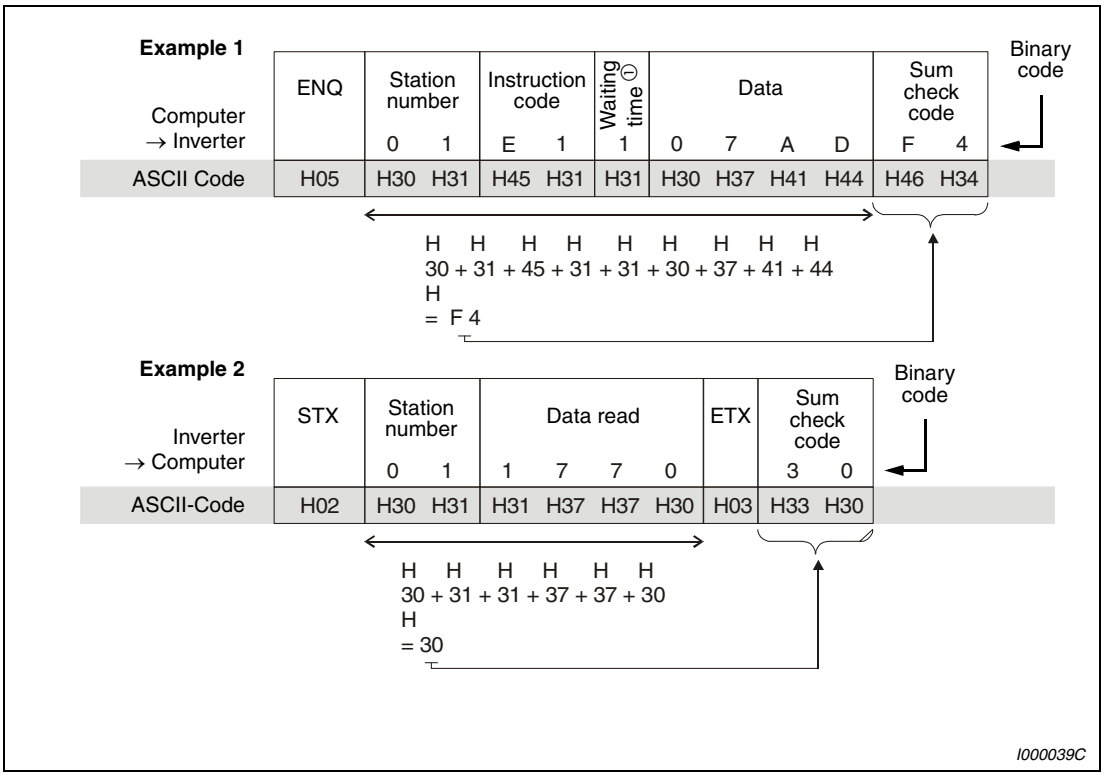

Fig. 6-111: *Sum check code (examples)*

① When Pr. 123 "Waiting time setting" ≠ 9999, create the communication request data without "waiting time" in the data format. The number of characters decreases by 1.

- Error code
  If any error is found in the data received by the inverter, its definition is sent back to the computer together with the NAK code.

Error Code	Error Item	Error Definition	Inverter Operation
H0	Computer NAK error	The number of errors consecutively detected in communication request data from the computer is greater than allowed number of retries.	Brought to an alarm stop if error occurs continuously more than the allowable number of retries. (E.PUE)
H1	Parity error	The parity check result does not match the specified parity.	
H2	Sum check error	The sum check code in the computer does not match that of the data received by the inverter.	
H3	Protocol error	The data received by the inverter has a grammatical mistake. Alternatively, data receive is not completed within the predetermined time. CR or LF is not as set in the parameter.	
H4	Framing error	The stop bit length differs from the initial setting.	
H5	Overrun error	New data has been sent by the computer before the inverter completes receiving the preceding data.	
H6	—	—	—
H7	Character error	The character received is invalid (other than 0 to 9, A to F, control code).	Does not accept received data but is not brought to alarm stop.
H8	—	—	—
H9	—	—	—
HA	Mode error	Parameter write was attempted in other than the computer link operation mode, when operation command source is not selected or during inverter operation.	Does not accept received data but is not brought to alarm stop.
HB	Instruction code error	The specified command does not exist.	
HC	Data range error	Invalid data has been specified for parameter write, frequency setting, etc.	
HD	—	—	—
HE	—	—	—
HF	—	—	—

Tab. 6-54: *Error codes*

● Response time

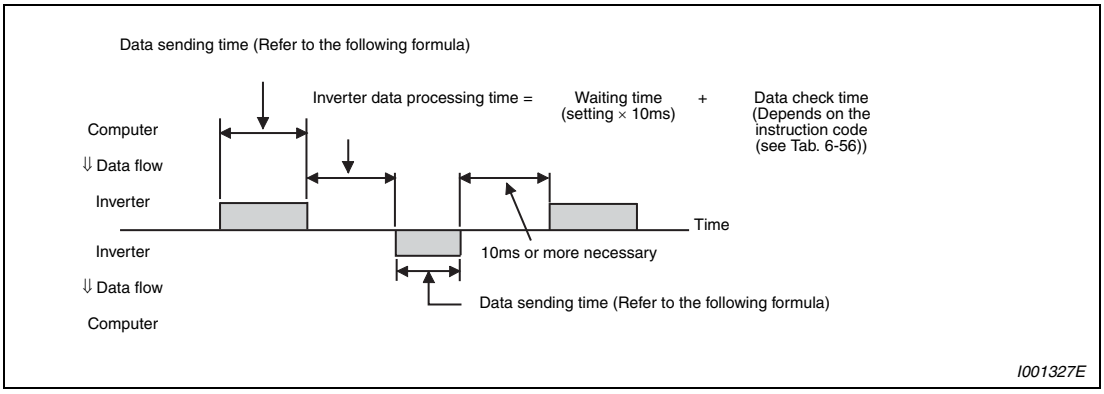

Fig. 6-112: *Response time*

Formula for data sending time:

$$\text{Data sending time [s]} = \frac{1}{\text{Communication speed (Baudrate)}} \times \text{Number of data characters (refer to page 6-207)} \times \text{Communications specifications (total number of bits)}^{①}$$

① The communication specifications are listed in the table below:

Name		Number of Bits
Stop bit length		1 bit
		2 bits
Data length		7 bit
		8 bits
Parity check	Yes	1 bit
	No	0 bits

Tab. 6-55: *Communication specifications*

NOTES

In addition to the above, 1 start bit is necessary.

Minimum number of total bits: 9 bits. Maximum number of total bits: 12 bits.

The data check time related to different functions is shown in the table below:

Function	Data Check Time
Various monitors, run command, frequency setting (RAM)	< 12ms
Parameter read/write, frequency setting (E^2PROM)	< 30ms
Parameter clear/all clear	< 5s
Reset command	— (no answer)

Tab. 6-56: *Data check time*

Instructions for the program

When data from the computer has any error, the inverter does not accept that data. Hence, in the user program, always insert a retry program for data error.

All data communication, e.g. run command or monitoring, are started when the computer gives a communication request. The inverter does not return any data without the computer's request. Hence, design the program so that the computer gives a data read request for monitoring, etc. as required.

Program example
To change the operation mode to computer link operation

Programming example of Microsoft® Visual C++® (Ver.6.0)

```
#include <stdio.h>
#include <windows.h>
void main(void){
	HANDLE		hCom;		//Communication handle
	DCB		hDcb;		//Structure for communication setting
	COMMTIMEOUTS	hTim;		//Structure for time out setting

	char		szTx[0x10];	//Send buffer
	char		szRx[0x10];	//Receive buffer
	char		szCommand[0x10];	//Command
	int		nTx,nRx;	//For buffer size storing
	int		nSum;		//For sum code calculation
	BOOL		bRet;
	int		nRet;
	int		i;

	//**** Opens COM1 Port****
	hCom = CreateFile ("COM1", (GENERIC_READ | GENERIC_WRITE), 0, NULL, OPEN_EXISTING, FILE_ATTRIBUTE_NORMAL, NULL);
	if (hCom != NULL) {
		//**** Makes a communication setting of COM1 port****
		GetCommState(hCom,&hDcb);		//Retrieves current communication information
		hDcb.DCBlength = sizeof(DCB);		//Structure size setting
		hDcb.BaudRate = 19200;		//Communication speed=19200bps
		hDcb.ByteSize = 8;		//Data length=8bit
		hDcb.Parity = 2;		//Even parity
		hDcb.StopBits = 2;		//Stop bit=2bit
		bRet = SetCommState(hCom,&hDcb);		//Sets the changed communication data
		if (bRet == TRUE) {
			//**** Makes a time out setting of COM1 port****
			Get CommTimeouts(hCom,&hTim);		/Obtains the current time out value
			hTim.WriteTotalTimeoutConstant = 1000;		//Write time out 1s
			hTim.ReadTotalTimeoutConstant = 1000;		//Read time out 1s
			SetCommTimeouts(hCom,&hTim);		//Changed time out value setting
			//**** Sets the command to switch the operation mode of the station 1 inverter to the network operation mode ****
			sprintf(szCommand,"01FB10000");		//Send data (NET operation write)
			nTx = strlen(szCommand);		//Send data size
			//**** Generates sum code****
			nSum = 0;		//Initialization of sum data
			for (i = 0;i < nTx;i++) {
				nSum += szCommand[i];		//Calculates sum code
				nSum &= (0xff);		//Masks data
			}

			//**** Generates send data****
			memset(szTx,0,sizeof(szTx));		//Initialization of send buffer
			memset(szRx,0,sizeof(szRx));		//Initialization of receive buffer
			sprintf(szTx,"\5%s%02X",szCommand,nSum);		//ENQ code+send data+sum code
			nTx = 1 + nTx + 2;		//Number of ENQ code+number of send data+number of sum code

			nRet = WriteFile(hCom,szTx,nTx,&nTx,NULL);
			//**** Sending ****
			if(nRet != 0) {
			nRet = ReadFile(hCom,szRx,sizeof(szRx),&nRx,NULL);
			//**** Receiving ****
				if(nRet != 0) {
					//**** Displays the receive data ****
					for(i = 0;i < nRx;i++) {
						printf("%02X ",(BYTE)szRx[i]);	//Consol output of receive data
						//Displays ASCII coder in hexadecimal. Displays 30 when "0"
					}
					printf("\n\r");
				}
			}
		}
		CloseHandle(hCom);		//Close communication port
	}
}
```

Fig. 6-113:*Programming example*

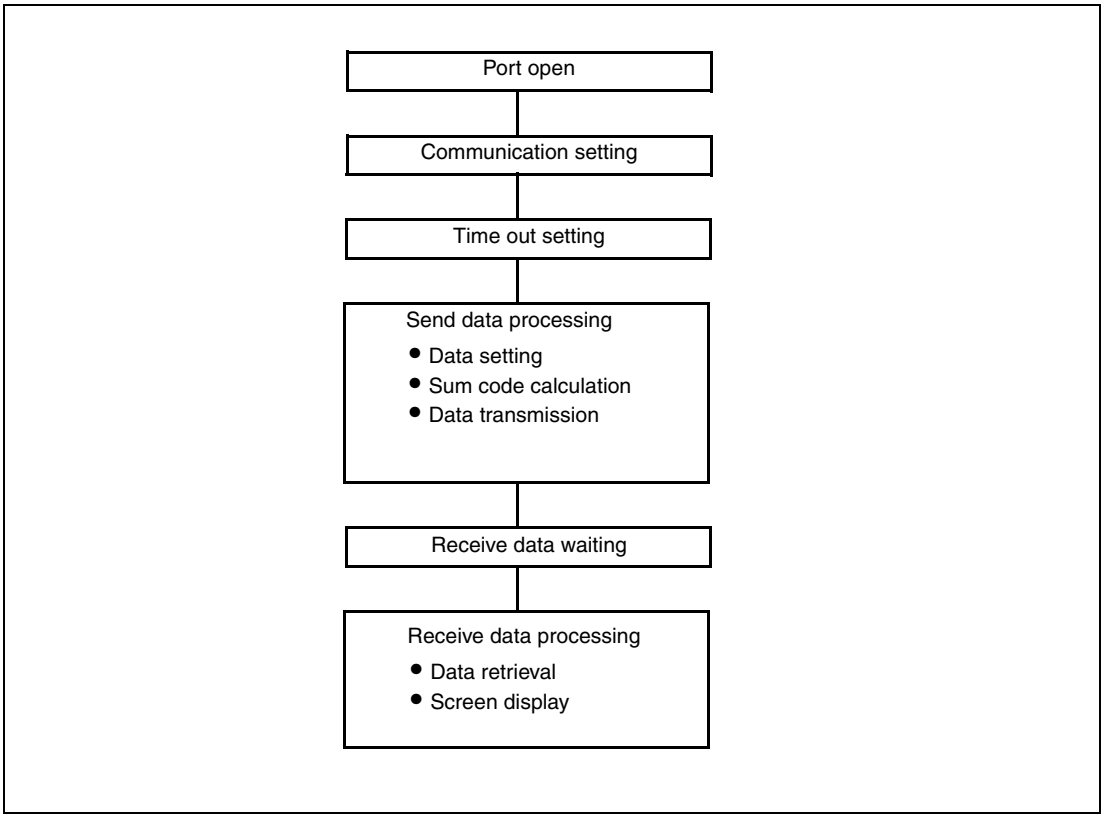

Fig. 6-114: *General flowchart*

NOTES

Always set the communication check time interval before starting operation to prevent hazardous conditions.

Data communication is not started automatically but is made only once when the computer provides a communication request. If communication is disabled during operation due to signal cable breakage etc., the inverter cannot be stopped. When the communication check time interval has elapsed, the inverter will come to an alarm stop (E.PUE). The inverter can be coasted to a stop by switching on its RES signal or by switching power off.

If communication is broken due to signal cable breakage, computer fault etc., the inverter does not detect such a fault. This should be fully noted.

Setting items and set data

After completion of parameter setting, set the instruction codes and data then start communication from the computer to allow various types of operation control and monitoring.

Item		Read/ Write	Instruction Code	Data Description	Number of Data Digits (Format)
Operation Mode		Read	H7B	H0000: Network operation H0001: External operation H0002: PU operation	4 (B, E/D)
		Write	HFB		4 (A, C/D)
Monitor	Output frequency/ speed	Read	H6F	H0000 to HFFFF: Output frequency in 0.01Hz increments Speed increments 1/0.001 (when Pr. 37 = 0.01 to 9998) When "0.01 to 9998" is set in Pr. 37 and "01" in instruction code HFF, the increments change to 0.001 and the data format is E2. When "100" is set in Pr. 52, the monitor value is different depending on whether the inverter is at a stop or running. (Refer to section 6.10.2.)	4 (B, E/D) 6 (B, E2/D)
	Output current	Read	H70	H0000 to HFFFF: Output current (hexadecimal) in 0.01A increments	4 (B, E/D)
	Output voltage	Read	H71	H0000 to HFFFF: Output voltage (hexadecimal) in 0.1V increments	4 (B, E/D)
	Special monitor	Read	H72	H0000 to HFFFF: Monitor data selected in instruction code HF3 When "0.01 to 9998" is set in Pr. 37 and "01" in instruction code HFF, the data format is E2.	4 (B, E/D) 6 (B, E2/D)
	Special monitor selection No.	Read	H73	H01 to H40: Monitor selection data (Refer to Tab. 6-60 on page 6-219.)	2 (B, E1/D)
		Write	HF3		2 (A1, C/D)
	Fault definition	Read	H74 to H77	H0000 to HFFFF: b15 b8 b7 b0 H74: Second fault in past / Latest alarm H75: Fourth fault in past / Third fault in past H76: Sixth fault in past / Fifth fault in past H77: Eighth fault in past / Seventh fault in past (Refer to Tab. 6-61 on page 6-220.)	4 (B, E/D)
Run command (extended)		Write	HF9	You can set the control input commands such as the forward rotation signal (STF) and reverse rotation signal (STR). (Refer to page 6-221 for details.)	4 (A, C/D)
Run command		Write	HFA		2 (A1, C/D)
Inverter status monitor (extended)		Read	H79	You can monitor the states of the output signals such as forward rotation, reverse rotation and inverter running (RUN).	4 (B, E/D)
Inverter status monitor		Read	H7A		2 (B, E1/D)

Tab. 6-57: *Setting of the instruction codes and data (1)*

Item	Read/ Write	Instruction Code	Data Description	Number of Data Digits (Format)
Set frequency (RAM)	Read	H6D	Read set frequency/speed from RAM or E²PROM. H0000 to HFFFF: Set frequency in 0.01Hz increments Speed increments 1/0.001 (when Pr. 37 = 0.01 to 9998) When "0.01 to 9998" is set in Pr. 37 and "01" in instruction code HFF, the increments change to 0.001 and the data format is E2.	4 (B, E/D) 6 (B, E2/D)
Set frequency (E²PROM)		H6E		
Set frequency (RAM)	Write	HED	Write set frequency/speed to RAM or E²PROM. H0000 to H9C40 (0 to 400.00Hz): Frequency increments 0.01Hz Speed increments 1/0.001 (when Pr. 37 = 0.01 to 9998) When "0.01 to 9998" is set in Pr. 37 and "01" in instruction code HFF, the increments change to 0.001 and the data format is A2. To change the set frequency consecutively, write data to the inverter RAM. (instruction code: HED)	4 (A, C/D) 6 (A2, C/D)
Set frequency (RAM, E²PROM)		HEE		
Inverter reset	Write	HFD	H9696: Resets the inverter. As the inverter is reset at start of communication by the computer, the inverter cannot send reply data back to the computer.	4 (A, C/D)
			H9966: Resets the inverter. When data is sent normally, ACK is returned to the computer and then the inverter is reset.	4 (A, D)
Alarm definition all clear	Write	HF4	H9696: Alarm history batch clear	4 (A, C/D)
All parameter clear	Write	HFC	All parameters return to the initial values. Whether to clear communication parameters or not can be selected according to data. (✔: Clear, —: Not clear) Clear Type / Data / Communication parameter Parameter clear: H9696 ✔; H5A5A — All parameter clear: H9966 ✔; H55AA — When all parameter clear is executed for H9696 or H9966, communication-related parameter settings also return to the initial values. When resuming operation, set these parameters again. Executing clear will clear the instruction code HEC, HF3, and HFF settings. During password lock, only all parameter clear is available with H9966 and H55AA.	4 (A, C/D)

Tab. 6-57: *Setting of the instruction codes and data (2)*

Item		Read/ Write	Instruction Code	Data Description	Number of Data Digits (Format)
Parameters		Read	H00 to H63	Refer to the instruction code of the parameter list (appendix) and write and/or read parameter values as required. When setting Pr. 100 and later, link parameter extended setting must be set. Data format of Pr. 37 read and write is E2 and A2.	4 (B, E/D) 6 (B, E2/D)
		Write	H80 to HE3		4 (A, C/D) 6 (A2, C/D)
Link parameter extended setting		Read	H7F	Parameter description is changed according to the H00 to H09 setting. For details of the settings, refer to the instruction code of the parameter list (appendix).	2 (B, E1/D)
		Write	HFF		2 (A1, C/D)
Second parameter changing (instruction code HFF = 1, 9)		Read	H6C	Setting calibration parameter ① H00: Frequency ② H01: Parameter-set analog value H02: Analog value input from terminal ① Refer to page 6-218. ② The gain frequency can also be written using Pr. 125 (instruction code: H99) or Pr. 126 (instruction code: H9A).	2 (B, E1/D)
		Write	HEC		2 (A1, C/D)
Multi command		Write/ Read	HF0	Available for writing 2 commands, and monitoring 2 items for reading data	10 (A3, C1/D)
Inverter type monitor	Inverter type	Read	H7C	Reading inverter type in ASCII code. "H20" (blank code) is set for blank area Example of FR-D740 SC: H46, H52, H2D, H44, H37, H34, H30, H20 ... H20	20 (B, E3/D)
	Capacity	Read	H7D	Reading inverter capacity in ASCII code. Data is read in increments of 0.1kW, and rounds down to 0.01kW increments "H20" (blank code) is set for blank area Example 0.4K. . . . . „-----4“ (H20, H20, H20, H20, H20, H34) 0.75K. . . . „-----7“ (H20, H20, H20, H20, H20, H37)	6 (B, E2/D)

Tab. 6-57: *Setting of the instruction codes and data (3)*

NOTES

Refer to page 6-207 for data formats A, A1, A2, A3, B, C, C1, D, E, E1, E2 and E3.

Set 65520 (HFFF0) as a parameter value "8888" and 65535 (HFFFF) as "9999".

For the instruction codes HFF, HEC and HF3, their values are held once written but cleared to zero when an inverter reset or all clear is performed.

Example ▽ When reading the C3 (Pr. 902) and C6 (Pr. 904) settings from the inverter of station No. 0.

	Computer Send Data	Inverter Send Data	Description
①	ENQ 00 FF 0 01 82	ACK 00	Set "H01" to the extended link parameter.
②	ENQ 00 EC 0 01 7E	ACK 00	Set "H01" to second parameter changing.
③	ENQ 00 5E 0 0F	STX 00 0000 ETX 25	C3 (Pr. 902) is read. 0% is read.
④	ENQ 00 60 0 FB	STX 00 0000 ETX 25	C6 (Pr. 904) is read. 0% is read.

Tab. 6-58: *Example for data transmission*

To read/write C3 (Pr. 902) and C6 (Pr. 904) after inverter reset or parameter clear, execute from step ① again.

△

● List of calibration parameters

Pr.	Name	Instruction Code			Pr.	Name	Instruction Code		
		Read	Write	Extended			Read	Write	Extended
C2 (902)	Terminal 2 frequency setting bias frequency	5E	DE	1	C5 (905)	Terminal 4 frequency setting bias frequency	60	E0	1
C3 (902)	Terminal 2 frequency setting bias	5E	DE	1	C6 (904)	Terminal 4 frequency setting bias	60	E0	1
125 (903)	Terminal 2 frequency setting gain frequency	5F	DF	1	126 (905)	Terminal 4 frequency setting gain frequency	61	E1	1
C4 (903)	Terminal 2 frequency setting gain	5F	DF	1	C7 (905)	Terminal 4 frequency setting gain	61	E1	1

Tab. 6-59: *Calibration parameters*

- Special monitor selection numbers.
  Refer to section 6.10.2 for details of the monitor description.

Data	Description	Unit	Data	Description	Unit
H01	Output frequency/speed ①	0.01Hz 0.001	H10	Output terminal status ③	—
H02	Output current	0.01A	H14	Cumulative energization time	1h
H03	Output voltage	0.1V	H17	Actual operation time	1h
H05	Frequency setting/speed setting ①	0.01Hz 0.001	H18	Motor load factor	0.1%
H07	Motor torque	0.1%	H19	Cumulative power	1kWh
H08	Converter output voltage	0.1V	H34	PID set point	0.1%
H09	Regenerative brake duty	0.1%	H35	PID measured value	0.1%
H0A	Electronic thermal relay function load factor	0.1%	H36	PID deviation	0.1%
H0B	Output current peak value	0.01A	H3D	Motor thermal load factor	0.1%
H0C	Converter output voltage peak value	0.1V	H3E	Inverter thermal load factor	0.1%
H0E	Output power	0.01kW	H3F	Cumulative power 2	0.1kWh
H0F	Input terminal status ②	—	H40	PTC thermistor resistance	0.01kΩ

Tab. 6-60: *Special monitor selection numbers*

① When "0.01 to 9998" is set in Pr. 37 and "01" in instruction code HFF, the data format is 6 digits (E2).

② Input terminal monitor details
(when the terminal is ON: 1, when the terminal is OFF: 0, —: undetermined value)

b15															b0
—	—	—	—	—	—	—	—	—	RH	RM	RL	—	—	STR	STF

③ Output terminal monitor details
(when the terminal is ON: 1, when the terminal is OFF: 0, —: undetermined value)

b15															b0
—	—	—	—	—	—	—	—	SO	—	ABC	—	—	—	—	RUN

- Fault data
  Refer to section 7.1 for details of alarm description.

Data	Description	Data	Description	Data	Description
H00	No fault present	H40	E.FIN	HB1	E.PUE
H10	E.OC1	H52	E.ILF	HB2	E.RET
H11	E.OC2	H60	E.OLT	HC0	E.CPU
H12	E.OC3	H70	E.BE	HC4	E.CDO
H20	E.OV1	H80	E.GF	HC5	E.IOH
H21	E.OV2	H81	E.LF	HC7	E.AIE
H22	E.OV3	H90	E.OHT	HC9	E.SAF
H30	E.THT	H91	E.PTC	HF5	E.5
H31	E.THM	HB0	E.PE	—	—

Tab. 6-61: *Fault data*

Example ▽ Fault description display example (instruction code: H74)

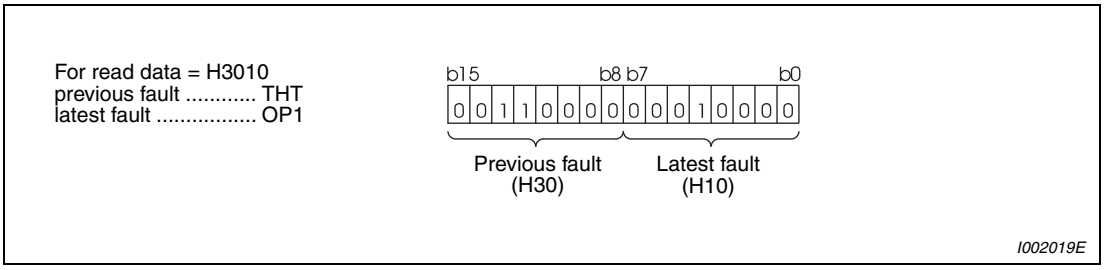

Fig. 6-115: *Fault example*

△

● Run command

Item	Instruction Code	Bits	Description	Example
Run command	HFA	8	b0: AU (current input selection) ② b1: Forward rotation start b2: Reverse rotation start b3: RL (low speed) ①② b4: RM (middle speed) ①② b5: RH (high speed) ① ② b6: RT (second function selection) ② b7: MRS (output stop) ① ②	Example 1: H02 (Forward rotation) b7 b0 0 0 0 0 0 0 1 0 Example 2: H00 (Stop) b7 b0 0 0 0 0 0 0 0 0
Run command (extended)	HF9	16	b0: AU (current input selection) ② b1: Forward rotation start b2: Reverse rotation start b3: RL (low speed) ①② b4: RM (middle speed) ①② b5: RH (high speed) ①② b6: RT (second function selection) ② b7: MRS (output stop) ①② b8 to b15:—	Example 1: H0002 (Forward rotation) b15 b0 0 0 0 0 0 0 0 0 0 0 0 0 0 0 1 0 Example 2: H0020 low speed operation (When Pr. 182 "RH terminal function selection" is set to "0") b15 b0 0 0 0 0 0 0 0 0 0 0 1 0 0 0 0 0

Tab. 6-62: *Run commands*

① The signal within parentheses is the initial setting. The description changes depending on the setting of Pr. 180 to Pr. 182 "Input terminal function selection". (Refer to section 6.9.1.)

② When Pr. 551 = 2 (PU Mode control source is PU connector), only forward rotation and reverse rotation can be used.

● Inverter status monitor

Item	Instruction Code	Bits	Description	Example
Inverter status monitor	H7A	8	b0: RUN (inverter running) ① b1: Forward rotation b2: Reverse rotation b3: SU (up to frequency) b4: OL (overload) b5: — b6: FU (frequency detection) ① b7: ABC (alarm) ①	Example 1: H02 (During forward rotation) b7 b0 0 0 0 0 0 0 1 0 Example 2: H80 (Stop at alarm occurrence) b7 b0 1 0 0 0 0 0 0 0
Inverter status monitor (extended)	H79	16	b0: RUN (inverter running) ① b1: Forward rotation b2: Reverse rotation b3: SU (up to frequency) b4: OL (overload) b5: — b6: FU (frequency detection) ① b7: ABC (alarm) ① b8: — b9: SO (Safety monitor output) ① b10 to b14:— b15: Alarm occurrence	Example 1: H0002 (During forward rotation) b15 b0 0 0 0 0 0 0 0 0 0 0 0 0 0 0 1 0 Example 2: H8080 (Stop at alarm occurrence) b15 b0 1 0 0 0 0 0 0 0 1 0 0 0 0 0 0 0

Tab. 6-63: *Monitoring the inverter status*

① The signal within parentheses is the initial setting. The description changes depending on the setting of Pr. 190, Pr. 192 or Pr. 197 "Output terminal function selection". (Refer to section 6.9.5.)

● Multi command HF0

Sending data format from computer to inverter

Format	Number of Characters																		
	1	2	3	4	5	6	7	8	9	10	11	12	13	14	15	16	17	18	19
A3	ENQ	Inverter station number		Instruction code (HF0)		Waiting time	Send data type①	Receive data type②	Data 1 ③				Data 2 ③				Sum check		CR/LF

Reply data from the inverter to the computer (no data error detected)

Format	Number of Characters																		
	1	2	3	4	5	6	7	8	9	10	11	12	13	14	15	16	17	18	19
C1	STX	Inverter station number		Send data type①	Receive data type②	Error code 1 ⑤	Error code 2 ⑤	Data 1 ④				Data 2 ④				ETX	Sum check		CR/LF

① Specify the data type of sending data (from computer to inverter).

② Specify the data type of reply data (from inverter to computer).

③ Combination of data 1 and data 2 for sending

Data Type	Data 1	Data 2	Remarks
E	Run command (expansion)	Set frequency (RAM)	Run command (expansion) is same as instruction code HF9 (refer to page 6-221). The unit of set frequency is always by four digits, even when "0.01to 9998" is set in Pr. 37 and "01" is set in instruction code HFF.
1	Run command (expansion)	Set frequency (RAM, E²PROM)	

Tab. 6-64: *Data type of sending data*

④ Combination of data 1 and data 2 for reply

Data Type	Data 1	Data 2	Remarks
E	Inverter status monitor (expansion)	Output frequency (speed)	Inverter status monitor (expansion) is same as instruction code H79 (Refer to page 6-222). The unit of speed monitor is always by four digits (rounds down after the decimal point), even when "0.01 to 9998" is set in Pr. 37 and "01" is set in instruction code HFF. Replys the monitor item specified in instruction code HF3 for special monitor.(Refer to page 6-219).
1	Inverter status monitor (expansion)	Special monitor	

Tab. 6-65: *Data type of reply data*

⑤ Error code for sending data 1 is set in error code 1, and error code for sending data 2 is set in error code 2. Mode error (HA), instruction code error (HB), data range error (HC) or no error (HF) is replied.

6.18.6 Modbus-RTU communication (Pr. 117, Pr. 118, Pr. 120, Pr. 122, Pr. 343, Pr. 549)

Using the Modbus RTU communication protocol, communication operation or parameter setting can be performed from the PU connector of the inverter.

Pr. No.	Name	Initial Value	Setting Range	Description
117	PU communication station number	0	0	No reply to the master ①
			1–247	Inverter station number specification Set the inverter station numbers when two or more inverters are connected to one personal computer.
118	PU communication speed	192	48/96/192/384	Communication speed The setting value × 100 equals the communication speed. (Example: 9600bps if 96)
120	PU communication parity check	2	0	Without parity check Stop bit length 2bit
			1	With odd parity check Stop bit length 1bit
			2	With even parity check Stop bit length 1bit
122	PU communication check time interval	9999	0	RS485 communication can be made. Note that a communication fault (E.PUE) occurs as soon as the inverter is switched to the operation mode with command source.
			0.1 – 999.8s	Communication check (signal loss detection) time interval If a no-communication state persists for longer than the permissible time, the inverter will come to trip (depends on Pr. 502).
			9999	No communication check (signal loss detection)
343	Communication error count	0	—	Displays the number of communication errors during Modbus-RTU communication (reading only)
502	Stop mode selection at communication error	0		**At fault occurrence** / **Indication** / **Fault output** / **At fault removal**
			0	Coasts to stop / E.PUE / Output / Stop (E.PUE)
			1	Decelerates to stop / After stop E.PUE / Output after stop / Stop (E.PUE)
			2	Decelerates to stop / After stop E.PUE / Without output / Automatic restart functions
549	Protocol selection	0	0	Mitsubishi inverter (computer link) protocol
			1	Modbus-RTU protocol

Parameters referred to	Refer to Section
—	

The above parameter can be set when Pr. 160 = 0.

① When Modbus-RTU communication is performed from the master with address 0 (station number 0) set, broadcast communication is selected and the inverter does not send a response message. When response from the inverter is necessary, set a value other than "0" (initial value is 0) in Pr. 117 "PU communication station number". Some functions are invalid for broadcast communication. (Refer to page 6-227.)

NOTES

When "1" (Modbus-RTU protocol) is set in Pr. 549 and "384" (38400bps) in Pr. 118, parameter unit (FR-PU04/FR-PU07) is disabled. When using the parameter unit (FR-PU04/FR-PU07), change parameter using the operation panel.

When using the Modbus-RTU protocol, set Pr. 549 "Protocol selection" to "1".

When PU connector is selected as NET mode operation source (Pr. 551 ≠ 2), Modbus RTU communication operation can be performed. (Refer to section 6.18.2).

Communication specifications

Item		Description	Related Parameters
Communication protocol		Modbus-RTU protocol	Pr. 549
Conforming standard		EIA-485 (RS485)	—
Number of inverters connected		1 : N (maximum 32 units), setting is 0 to 247 stations	Pr. 117
Communication speed		Can be selected from 4800/9600/19200 and 38400bps	Pr. 118
Control protocol		Asynchronous system	—
Communication method		Half-duplex system	—
Communication specifications	Character system	Binary (fixed to 8 bits)	—
	Start bit	1bit	—
	Stop bit length	Select from the following three types ● No parity, stop bit length: 2 bits ● Odd parity, stop bit length: 1 bit ● Even parity, stop bit length: 1 bit	Pr. 120
	Parity check		
	Error check	CRC code check	—
	Terminator	—	—
Waiting time setting		—	—

Tab. 6-66: *Communication specifications*

Outline

The Modbus protocol is the communication protocol developed by Modicon for PLC.
The Modbus protocol performs serial communication between the master and slave using the dedicated message frame. The dedicated message frame has the functions that can perform data read and write. Using the functions, you can read and write the parameter values from the inverter, write the input command of the inverter, and check the operating status. In this product, the inverter data are classified in the holding register area (register addresses 40001 to 49999). By accessing the assigned holding register address, the master can communicate with the inverter which is a slave.

NOTE

There are two different serial transmission modes: ASCII (American Standard Code for Information Interchange) mode and RTU (Remote Terminal Unit) mode. This product supports only the RTU mode in which two hexadecimal coded characters are transmitted in one byte (8 bit) data. Only the communication protocol is defined by the Modbus protocol, and the physical layer is not stipulated.

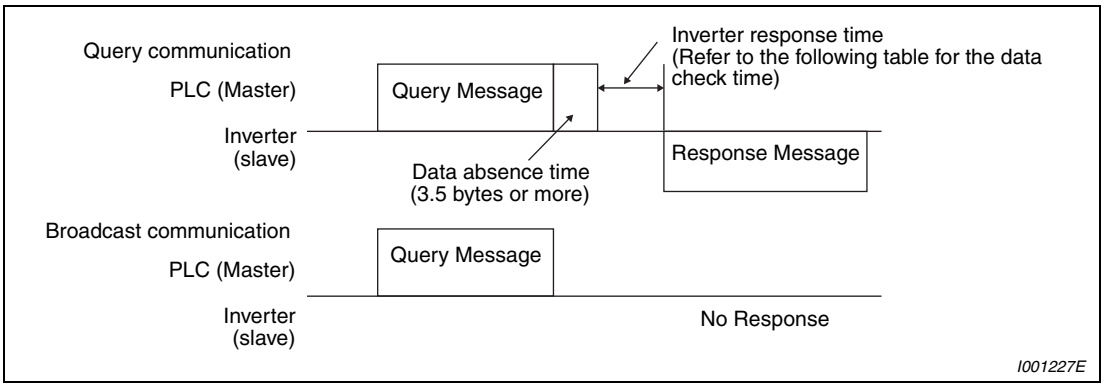

Fig. 6-116: *Message format*

The data check time related to different functions is shown in the table below:

Item	Check Time
Various monitors, operation command, frequency setting (RAM)	< 20ms
Parameter read/write, frequency setting (E^2PROM)	< 50ms
Parameter clear/all clear	< 5s
Reset command	—

Tab. 6-67: *Data check time*

- Query
  The master sends a message to the slave (= inverter) at the specified address.
- Normal
  Response after receiving the query from the master, the slave executes the requested function and returns the corresponding normal response to the master.
- Error Response
  If an invalid function code, address or data is received, the slave returns it to the master.
  When a response description is returned, the error code indicating that the request from the master cannot be executed is added.
  No response is returned for the hardware-detected error, frame error and CRC check error.
- Broadcast
  By specifying address 0, the master can send a message to all slaves. All slaves that received the message from the master execute the requested function. In this communication, the slaves do not return a response to the master.

NOTE

The inverter executes the function independently of the inverter station number setting (Pr. 117) during broadcast communication.

Message frame (protocol)

Communication method

Basically, the master sends a query message (question) and the slave returns a response message (response). When communication is normal, Device Address and Function Code are copied as they are, and when communication is abnormal (function code or data code is illegal), bit 7 (= 80h) of Function Code is turned on and the error code is set to Data Bytes.

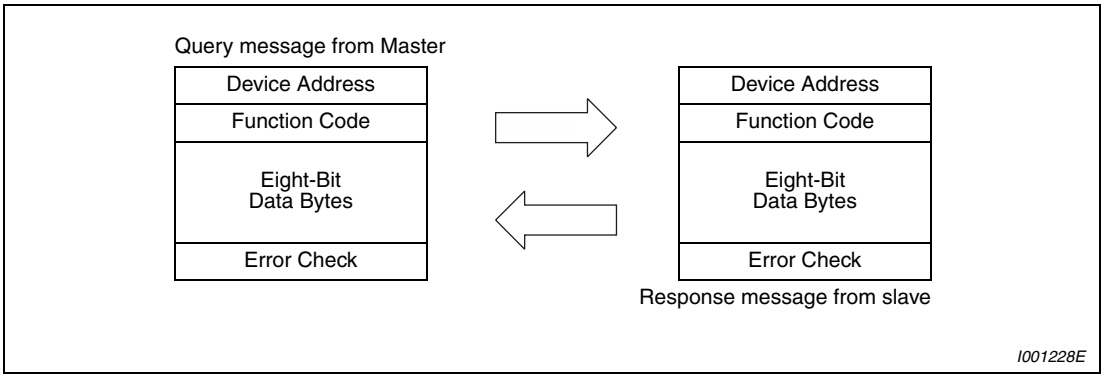

Fig. 6-117: *Data transmission*

The message frame consists of the four message fields as shown above. By adding the no-data time (T1: Start, End) of 3.5 characters to the beginning and end of the message data, the slave recognizes it as one message.

Protocol details

Start	❶ Address	❷ Function	❸ Data	❹ CRC Check		End
T1	8 bits	8 bits	n × 8 bits	L 8 bits	H 8 bits	T1

Message Field		Description
❶	Address field	The address code is 1 byte long (8 bits) and any of 0 to 247 can be set. Set "0" to send a broadcast message (all-address instruction) or any of 1 to 247 to send a message to each slave. When the slave responds, it returns the address set from the master. The value set to Pr. 117 "PU communication station number" is the slave address.
❷	Function field	The function code is 1 byte long (8 bits) and can be set to any of 1 to 255. The master sets the function that it wants to request from the slave, and the slave performs the requested operation. The following table gives the supported function codes. An error response is returned if the set function code is other than those in the following table. When the slave returns a normal response, it returns the function code set by the master. When the slave returns an error response, it returns H80 + function code.

Code	Function Name	Outline	Broadcast Communication
H03	Read Holding Register	Reads the holding register data.	Disallowed
H06	Preset Single Register	Writes data to the holding register.	Allowed
H08	Diagnostics	Function diagnosis. (communication check only)	Disallowed
H10	Preset Multiple Registers	Writes data to multiple consecutive holding registers.	Allowed
H46	Read Holding Register Access Log	Reads the number of registers that succeeded in communication last time.	Disallowed

❸	Data field	The format changes depending on the function code (refer to page 6-228). Data includes the byte count, number of bytes, description of access to the holding register, etc.
❹	CRC check field	The received message frame is checked for error. CRC check is performed, and 2 byte long data is added to the end of the message. When CRC is added to the message, the low-order byte is added first and is followed by the high-order byte. The CRC value is calculated by the sending side that adds CRC to the message. The receiving side recalculates CRC during message receiving, and compares the result of that calculation and the actual value received in the CRC check field. If these two values do not match, the result is defined as error.

Tab. 6-68: *Protocol details*

Message format types

The message formats corresponding to the function codes in Tab. 6-68 will be explained.

- Read holding register data (H03 or 03)
  Can read the description of system environment variables, real-time monitor, alarm history, and inverter parameters assigned to the holding register area. (Refer to the register list on page 6-236.)

Query Message

❶ Slave Address	❷ Function	❸ Starting Address		❹ No. of Points		CRC Check	
(8 bits)	H03 (8 bits)	H (8 bits)	L (8 bits)	H (8 bits)	L (8 bits)	L (8 bits)	H (8 bits)

Response message

❶ Slave Address	❷ Function	❺ Byte Count	❻ Data			CRC Check	
(8 bits)	H03 (8 bits)	(8 bits)	H (8 bits)	L (8 bits)	... n × 16 bits	L (8 bits)	H (8 bits)

Message		Description
❶	Slave Address	Set the address to which the message will be sent. Broadcast communication cannot be made (0 is invalid)
❷	Function	Set H03.
❸	Starting Address	Set the address at which holding register data read will be started. Starting address = starting register address (decimal) + 40001 For example, setting of the starting address 0001 reads the data of the holding register 40002.
❹	No. of Points	Set the number of holding registers from which data will be read. The number of registers from which data can be read is a maximum of 125.

Tab. 6-69: *Description of the query message*

Message		Description
❺	Byte Count	The setting range is H02 to HFA (2 to 250). Twice greater than the No. of Points specified at ❹ is set.
❻	Data	The number of data specified at ❹ is set. Data are read in order of Hi byte and Lo byte, and set in order of starting address data, starting address + 1 data, starting address + 2 data, ...

Tab. 6-70: *Description of normal response*

Example ▽

To read the register values of 41004 (Pr. 4) to 41006 (Pr. 6) from the slave address 17 (H11).

Query message

Slave Address	Function	Starting Address		No. of Points		CRC Check	
H11 (8 bits)	H03 (8 bits)	H03 (8 bits)	HEB (8 bits)	H00 (8 bits)	H03 (8 bits)	H77 (8 bits)	H2B (8 bits)

Normal response (Response message)

Slave Address	Function	Byte Count	Data						CRC Check	
H11 (8 Bits)	H03 (8 Bits)	H06 (8 Bits)	H17 (8 Bits)	H70 (8 Bits)	H0B (8 Bits)	HB8 (8 Bits)	H03 (8 Bits)	HE8 (8 Bits)	H2C (8 Bits)	HE6 (8 Bits)

Read value:
Register 41004 (Pr. 4): H1770 (60.00Hz)
Register 41005 (Pr. 5): H0BB8 (30.00Hz)
Register 41006 (Pr. 6): H03E8 (10.00Hz)

△

- Write multiple holding register data (H06 or 06)
  You can write the description of system environment variables and inverter parameters assigned to the holding register area. (Refer to the register list on page 6-236).

Query message

❶ Slave Address	❷ Function	❸ Register Address		❹ Preset Data		CRC Check	
(8 bits)	H06 (8 bits)	H (8 bits)	L (8 bits)	H (8 bits)	L (8 bits)	L (8 bits)	H (8 bits)

Normal response (Response message)

❶ Slave Address	❷ Function	❸ Register Address		❹ Preset Data		CRC Check	
(8 bits)	H06 (8 bits)	H (8 bits)	L (8 bits)	H (8 bits)	L (8 bits)	L (8 bits)	H (8 bits)

Message		Description
❶	Slave Address	Set the address to which the message will be sent. Setting of address 0 enables broadcast communication.
❷	Function	Set H06.
❸	Register Address	Set the address of the holding register to which data will be written. Register address = holding register address (decimal) + 40001 For example, setting of register address 0001 writes data to the holding register address 40002.
❹	Preset Data	Set the data that will be written to the holding register. The written data is fixed to 2 bytes.

Tab. 6-71: *Description of the query message*

The normal response data ❶ to ❹ (including CRC check) of the normal response are the same as those of the query message. No response is made for broadcast communication.

Example ▽

To write 60Hz (H1770) to 40014 (running frequency RAM) at slave address 5 (H05).

Query message

Slave Address	Function	Register Address		Preset Data		CRC Check	
H05 (8 bits)	H06 (8 bits)	H00 (8 bits)	H0D (8 bits)	H17 (8 bits)	H70 (8 bits)	H17 (8 bits)	H99 (8 bits)

Normal Response (Response message):
Same data as the query message.

△

NOTE

For broadcast communication, no response is returned in reply to a query. Therefore, the next query must be made when the inverter processing time has elapsed after the previous query.

- Function diagnosis (H08 or 08)
  A communication check can be made since the query message sent is returned unchanged as a response message (function of subfunction code H00). Subfunction code H00 (Return Query Data).

Query message

❶ Slave Address	❷ Function	❸ Subfunction		❹ Data		CRC Check	
(8 bits)	H08 (8 bits)	H00 (8 bits)	H00 (8 bits)	H (8 bits)	L (8 bits)	L (8 bits)	H (8 bits)

Normal response (Response message)

❶ Slave Address	❷ Function	❸ Subfunction		❹ Data		CRC Check	
(8 bits)	H08 (8 bits)	H00 (8 bits)	H00 (8 bits)	H (8 bits)	L (8 bits)	L (8 bits)	H (8 bits)

Message		Description
❶	Slave Address	Set the address to which the message will be sent. Broadcast communication cannot be made (0 is invalid)
❷	Function	Set H08.
❸	Subfunction	Set H0000.
❹	Data	Any data can be set if it is 2 bytes long. The setting range is H0000 to HFFFF.

Tab. 6-72: *Description of the query message*

The normal response data ❶ to ❹ (including CRC check) of the normal response are the same as those of the query message.

- Write multiple holding register data (H10 or 16)
  You can write data to multiple holding registers.

Query message

❶ Slave Address	❷ Function	❸ Starting Address		❹ No. of Registers		❺ Byte Count	❻ Data			CRC Check	
(8 Bits)	H10 (8 Bits)	H (8 Bits)	L (8 Bits)	H (8 Bits)	L (8 Bits)	L (8 Bits)	H (8 Bits)	L (8 Bits)	... n × 2 × 8 Bits	L (8 Bits)	H (8 Bits)

Normal response (Response message)

❶ Slave Address	❷ Function	❸ Starting Address		❹ No. of Registers		CRC Check	
(8 bits)	H10 (8 bits)	H (8 bits)	L (8 bits)	H (8 bits)	L (8 bits)	L (8 bits)	H (8 bits)

Message		Description
❶	Slave Address	Set the address to which the message will be sent. Setting of address 0 enables broadcast communication.
❷	Function	Set H10.
❸	Starting Address	Set the address where holding register data write will be started. Starting address = starting register address (decimal) + 40001 For example, setting of the starting address 0001 reads the data of the holding register 40002.
❹	No. of Points	Set the number of holding registers where data will be written. The number of registers where data can be written is a maximum of 125.
❺	Byte Count	The setting range is H02 to HFA (0 to 250). Set twice greater than the value specified at ❹.
❻	Data	Set the data specified by the number specified at ❹. The written data are set in order of Hi byte and Lo byte, and arranged in order of the starting address data, starting address + 1 data, starting address + 2 data ...

Tab. 6-73: *Description of the query message*

The normal response data ❶ to ❹ (including CRC check) of the normal response are the same as those of the query message.

Example ▽

To write 0.5s (H05) to 41007 (Pr. 7) at the slave address 25 (H19) and 1s (H0A) to 41008 (Pr. 8).

Query message

Slave Address	Function	Starting Address		No. of Registers		Byte Count	Data				CRC Check	
H19 (8 bits)	H10 (8 bits)	H03 (8 bits)	HEE (8 bits)	H00 (8 bits)	H02 (8 bits)	H04 (8 bits)	H00 (8 bits)	H05 (8 bits)	H00 (8 bits)	H0A (8 bits)	H86 (8 bits)	H3D (8 bits)

Normal response (Response message)

Slave Address	Function	Starting Address		No. of Registers		Byte Count	CRC Check	
H19 (8 bits)	H10 (8 bits)	H03 (8 bits)	HEE (8 bits)	H00 (8 bits)	H02 (8 bits)	H04 (8 bits)	H22 (8 bits)	H61 (8 bits)

△

- Read holding register access log (H46 or 70)
  A response can be made to a query made by the function code H03 or H10.
  The starting address of the holding registers that succeeded in access during previous communication and the number of successful registers are returned.
  In response to the query for other than the above function code, 0 is returned for the address and number of registers.

Query message

❶ Slave Address	❷ Function	CRC Check	
(8 bits)	H46 (8 bits)	L (8 bits)	H (8 bits)

Normal response (Response message)

❶ Slave Address	❷ Function	❸ Starting Address		❹ No. of Points		CRC Check	
(8 bits)	H46 (8 bits)	H (8 bits)	L (8 bits)	H (8 bits)	L (8 bits)	L (8 bits)	H (8 bits)

Message		Description
❶	Slave Address	Set the address to which the message will be sent. Broadcast communication cannot be made (0 is invalid)
❷	Function	Set H46.

Tab. 6-74: *Description of the query message*

Message		Description
❸	Starting Address	The starting address of the holding registers that succeeded in access is returned. Starting address = starting register address (decimal) + 40001 For example, when the starting address 0001 is returned, the address of the holding register that succeeded in access is 40002.
❹	No. of Points	The number of holding registers that succeeded in access is returned.

Tab. 6-75: *Description of normal response*

Example ▽

To read the successful register starting address and successful count from the slave address 25 (H19).

Query message

Slave Address	Function	CRC Check	
H19 (8 bits)	H46 (8 bits)	H8B (8 bits)	HD2 (8 bits)

Normal response (Response message)

Slave Address	Function	Starting Address		No. of Points		CRC Check	
H19 (8 bits)	H10 (8 bits)	H03 (8 bits)	HEE (8 bits)	H00 (8 bits)	H02 (8 bits)	H22 (8 bits)	H61 (8 bits)

Success of two registers at starting address 41007 (Pr. 7) is returned.

△

- Error response
  An error response is returned if the query message received from the master has an illegal function, address or data. No response is returned for a parity, CRC, overrun, framing or busy error.

NOTE No response message is sent in the case of broadcast communication also.

Error response (Response message)

❶ Slave Address	❷ Function	❸ Exception Code	CRC Check	
(8 bits)	H80 + Function (8 bits)	(8 bits)	L (8 bits)	H (8 bits)

Message		Description
❶	Slave address	Set the address received from the master.
❷	Function	The master-requested function code + H80 is set.
❸	Exception code	The code in the following table is set.

Tab. 6-76: *Description of response data*

Code	Error Item	Description
01	ILLEGAL FUNCTION (Function code illegal)	The set function code in the query message from the master cannot be handled by the slave.
02	ILLEGAL DATA ADDRESS ① (Address illegal)	The set register address in the query message from the master cannot be handled by the inverter. (No parameter, parameter read disabled, parameter write disabled)
03	ILLEGAL DATA VALUE (Data illegal)	The set data in the query message from the master cannot be handled by the inverter. (Out of parameter write range, mode specified, other error)

Tab. 6-77: *Error code list*

① An error will not occur in the following cases:

– Function code H03 (Read Holding Register Data)
  When the No. of Points is 1 or more and there is one or more holding registers from which data can be read.

– Function code H10 (Write Multiple Holding Register Data)
  When the No. of Points is 1 or more and there is 1 or more holding registers to which data can be written.

Namely, when the function code H03 or H10 is used to access multiple holding registers, an error will not occur if a non-existing holding register or read disabled or write disabled holding register is accessed.

NOTES An error will occur if all accessed holding registers do not exist.

Data read from a non-existing holding register is 0, and data written there is invalid.

To detect the mistakes of message data from the master, they are checked for the following errors. If an error is detected, an alarm stop will not occur.

Error Item	Error Definition	Inverter Side Operation
Parity error	The data received by the inverter differs from the specified parity (Pr. 120 setting).	Pr. 343 is increased by 1 at error occurrence. The terminal LF is output at error occurrence.
Framing error	The data received by the inverter differs from the specified stop bit length (Pr. 120).	
Overrun error	The following data was sent from the master before the inverter completes data receiving.	
Message frame error	The message frame data length is checked, and the received data length of less than 4 bytes is regarded as an error.	
CRC check error	A mismatch found by CRC check between the message frame data and calculation result is regarded as an error.	

Tab. 6-78: *Error check item*

Modbus registers

● System environment variable

Register	Definition	Read/Write	Remarks
40002	Inverter reset	Write	Any value can be written
40003	Parameter clear	Write	Set H965A as a written value.
40004	All parameter clear	Write	Set H99AA as a written value.
40006	Parameter clear ①	Write	Set H5A96 as a written value.
40007	All parameter clear ①	Write	Set HAA99 as a written value.
40009	Inverter status/control input instruction ②	Read/write	Refer to Tab. 6-80
40010	Operation mode/inverter setting ③	Read/write	Refer to Tab. 6-81
40014	Running frequency (RAM value)	Read/write	According to the Pr. 37 setting, the frequency and selectable speed are in 1r/min increments.
40015	Running frequency (E^2PROM value)	Write	

Tab. 6-79: *System environment variable*

① The communication parameter values are not cleared.

② For write, set the data as a control input instruction. For read, data is read as an inverter operating status.

③ For write, set data as the operation mode setting. For read, data is read as the operation mode status.

Bit	Definition	
	Control Input Instruction	**Inverter Status**
0	Stop command	RUN (inverter running) ②
1	Forward rotation command	Forward rotation
2	Reverse rotation command	Reverse rotation
3	RH (high speed operation command) ①	SU (up to frequency)
4	RM (middle speed operation command) ①	OL (overload)
5	RL (low speed operation command) ①	0
6	0	FU (frequency detection)
7	RT (second function selection)	ABC (Alarm) ②
8	AU (current input selection)	0
9	0	SO (Safety monitor output) ②
10	MRS (output stop)	0
11	0	0
12	0	0
13	0	0
14	0	0
15	0	Alarm

Tab. 6-80: *Inverter status/control input instruction*

① The signal within parentheses is the default setting. The description changes depending on the setting of Pr. 180 to Pr. 182 "Input terminal function selection". (Refer to section 6.9.1.) Each assigned signal is valid or invalid depending on NET. (Refer to section 6.17.3.)

② The signal within parentheses is the default setting. Definitions change according to the Pr. 190, Pr. 192 or Pr. 197 "Output terminal function selection". (Refer to section 6.9.5.)

Operation Mode	Read Value	Written Value
EXT	H0000	H0010
PU	H0001	—
EXT JOG	H0002	—
NET	H0004	H0014
PU + EXT	H0005	—

Tab. 6-81: *Operation mode/inverter setting*

The restrictions depending on the operation mode changes according to the computer link specifications.

● Real-time monitor

Refer to section 6.10.2 for details of the monitor description.

Register	Description	Unit	Register	Description	Unit
40201	Output frequency/ Speed	0.01Hz/1 ①	40220	Cumulative energizing time	1h
40202	Output current	0.01A	40223	Actual operation time	1h
40203	Output voltage	0.1V	40224	Motor load factor	0.1%
40205	Frequency setting/ speed setting	0.01Hz/1 ①	40225	Cumulative power	1kWh
40208	Converter output voltage	0.1V	40252	PID set point	0.1%
40209	Regenerative brake duty	0.1%	40253	PID measurement value	0.1%
40210	Electronic thermal relay function load factor	0.1%	40254	PID deviation value	0.1%
40211	Output current peak value	0.01A	40261	Motor thermal load factor	0.1%
40212	Converter output voltage peak value	0.1V	40262	Inverter thermal load factor	0.1%
40214	Output power	0.01kW	40263	Cumulative power 2	0.01kWh
40215	Input terminal status ②	—	40264	PTC thermistor resistance	0.01kΩ
40216	Output terminal status ③	—	—	—	—

Tab. 6-82: *Real-time monitor*

① When Pr. 37 = "0.01 to 9998", displayed in integral number.

② Input terminal monitor details
(when the terminal is ON: 1, when the terminal is OFF: 0, —: undetermined value)

b15															b0
—	—	—	—	—	—	—	—	—	RH	RM	RL	—	—	STR	STF

③ Output terminal monitor details
(when the terminal is ON: 1, when the terminal is OFF: 0, —: undetermined value)

b15															b0
—	—	—	—	—	—	—	—	SO	—	ABC	—	—	—	—	RUN

● Parameter

Parameters	Register	Parameter Name	Read/Write	Remarks
0–999	41000–41999	Refer to the parameter list (Tab. 6-1) for the parameter names.	Read/write	The parameter number + 41000 is the register number.
C2 (902)	41902	Terminal 2 frequency setting bias (frequency)	Read/write	
C3 (902)	42092	Terminal 2 frequency setting bias (analog value)	Read/write	The analog value (%) set to C3 (902) is read.
	43902	Terminal 2 frequency setting bias (terminal analog value)	Read	The analog value (%) of the voltage applied to the terminal 2 is read.
125 (903)	41903	Terminal 2 frequency setting gain (frequency)	Read/write	
C4 (903)	42093	Terminal 2 frequency setting gain (analog value)	Read/write	The analog value (%) set to C4 (903) is read.
	43903	Terminal 2 frequency setting gain (terminal analog value)	Read	The analog value (%) of the voltage applied applied to the terminal 2 is read.
C5 (904)	41904	Terminal 4 frequency setting bias (frequency)	Read/write	
C6 (904)	42094	Terminal 4 frequency setting bias (analog value)	Read/write	The analog value (%) set to C6 (904) is read.
	43904	Terminal 4 frequency setting bias (terminal analog value)	Read	The analog value (%) of the current (voltage) applied to the terminal 4 is read.
126 (905)	41905	Terminal 4 frequency setting gain (frequency)	Read/write	
C7 (905)	42095	Terminal 4 frequency setting gain (analog value)	Read/write	The analog value (%) set to C7 (905) is read.
	43905	Terminal 4 frequency setting gain (terminal analog value)	Read	The analog value (%) of the current (voltage) applied to the terminal 4 is read.

Tab. 6-83: *Parameter*

● Fault history

Register	Definition	Read/Write	Remarks
40501	Fault history 1	Read/write	Being 2 bytes in length, the data is stored as "H00□□". The error code can be referred to in the low-order 1 byte. Performing write using the register 40501 batch-clears the alarm history. Set any value as data.
40502	Fault history 2	Read	
40503	Fault history 3	Read	
40504	Fault history 4	Read	
40505	Fault history 5	Read	
40506	Fault history 6	Read	
40507	Fault history 7	Read	
40508	Fault history 8	Read	

Tab. 6-84: *Fault history*

Data	Description	Data	Description	Data	Description
H00	No fault present	H40	E.FIN	HB1	E.PUE
H10	E.OC1	H52	E.ILF	HB2	E.RET
H11	E.OC2	H60	E.OLT	HC0	E.CPU
H12	E.OC3	H70	E.BE	HC4	E.CDO
H20	E.OV1	H80	E.GF	HC5	E.IOH
H21	E.OV2	H81	E.LF	HC7	E.AIE
H22	E.OV3	H90	E.OHT	HC9	E.SAF
H30	E.THT	H91	E.PTC	HF5	E.5
H31	E.THM	HB0	E.PE	—	—

Tab. 6-85: *Fault code list*

NOTE Refer to section 7.1 for details of fault definition.

Communication error count (Pr. 343)

You can check the cumulative number of communication errors.

Parameter	Setting Range	Minimum Setting Range	Initial Value
343	(Read only)	1	0

Tab. 6-86: *Number of communication errors*

NOTE

The number of communication errors is temporarily stored into the RAM. As it is not stored into the E²PROM, performing a power supply reset or inverter reset clears the value to 0.

Output terminal LF "alarm output (communication error warnings)"

During a communication error, the alarm signal (LF signal) is output by open collector output. Assign the used terminal using any of Pr. 190, Pr. 192 or Pr. 197 "Output terminal function selection".

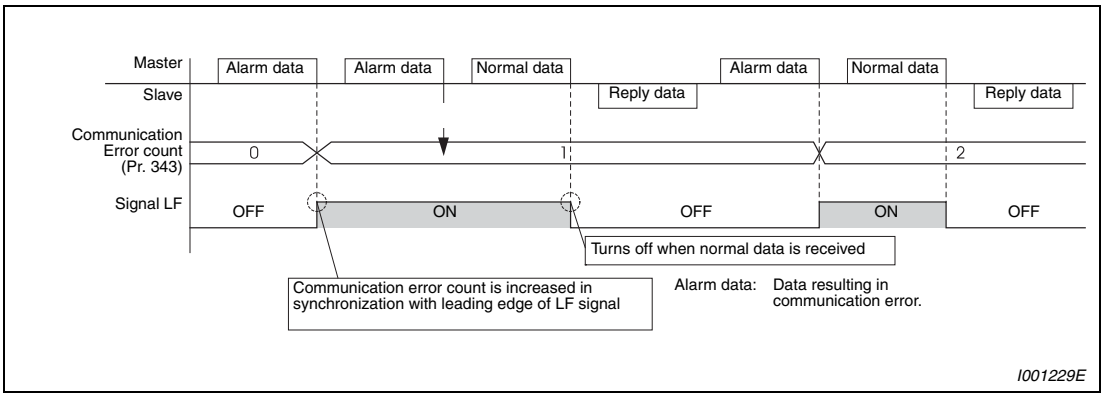

Fig. 6-118: *Output of the LF signal*

NOTE

The LF signal can be assigned to the output terminal using any of Pr. 190, Pr. 192 or Pr. 197. Changing the terminal assignment using Pr. 190, Pr. 192 or Pr. 197 may affect the other functions. Make setting after confirming the function of each terminal.

6.19 Special operation

Purpose	Parameters that must be set		Refer to Section
Perform process control such as pump and air volume.	PID control	Pr. 127–Pr. 134, Pr. 575–Pr. 577	6.19.1
Dancer control	PID control (dancer control setting)	Pr. 44, Pr. 45, Pr. 128–Pr. 134	6.19.2
Traverse function	Traverse function	Pr. 592–Pr. 597	6.19.3
Avoid over voltage alarm due to regeneration by automatic adjustment of output frequency	Regeneration avoidance function	Pr. 882, Pr. 883, Pr. 885, Pr. 886	6.19.4

6.19.1 PID control (Pr. 127 to Pr. 134, Pr. 575 to Pr. 577)

The inverter can be used to exercise process control, e.g. flow rate, air volume or pressure.

The terminal 2 input signal or parameter setting is used as a set point and the terminal 4 input signal used as a feedback value to constitute a feedback system for PID control.

Pr. No.	Name	Initial Value	Setting Range	Description			
127	PID control automatic switchover frequency	9999	0–400Hz	Set the frequency at which the control is automatically changed to PID control.			
			9999	Without PID automatic switchover function			
128	PID action selection	0	0	PID action is not performed			
			20	PID reverse action	Measured value (terminal 4) Set value (terminal 2 or Pr. 133)		
			21	PID forward action			
			40	PID reverse action	Addition method: fixed	For dancer control set point (Pr. 133), measured value (terminal 4) main speed (frequency command of the operation mode)	
			41	PID forward action			
			42	PID reverse action	Addition method: ratio		
			43	PID forward action			
129	PID proportional band ①	100%	0.1 – 1000%	If the proportional band is narrow (parameter setting is small), the manipulated variable varies greatly with a slight change of the measured value. Hence, as the proportional band narrows, the response sensitivity (gain) improves but the stability deteriorates, e.g. hunting occurs. Gain Kp= 1/proportional band			
			9999	No proportional control			
130	PID integral time ①	1 s	0,1 – 3600s	For deviation step input, time (Ti) required for only the integral (I) action to provide the same manipulated variable as that for the proportional (P) action. As the integral time decreases, the set point is reached earlier but hunting occurs more easily.			
			9999	No integral control.			
131	PID upper limit	9999	0–100%	Maximum value If the feedback value exceeds the setting, the FUP signal is output. The maximum input (20mA/5V/10V) of the measured value (terminal 4) is equivalent to 100%.			
			9999	No function			
132	PID lower limit	9999	0–100%	Minimum frequency If the process value falls below the setting range, the FDN signal is output. The maximum input (20mA/5V/10V) of the measured value (terminal 4) is equivalent to 100%.			
			9999	No function			
133	PID action set point ①	9999	0–100%	Used to set the set point for PID control.			
			9999	Terminal 2 input is the set point.			
134	PID differential time ①	9999	0.01 – 10s	For deviation ramp input, time (Td) required for providing only the manipulated variable for the proportional (P) action. As the differential time increases, greater response is made to a deviation change.			
			9999	No differential control.			
575	Output interruption detection time	1 s	0.1 – 3600 s	The inverter stops operation if the output frequency after PID operation remains at less than the Pr. 576 setting for longer than the time set in Pr. 575.			
			9999	Without output interruption function			
576	Output interruption detection level	0Hz	0–400Hz	Set the frequency at which the output interruption processing is performed.			
577	Output interruption cancel level	1000%	900 – 1100%	Set the level (Pr. 577 minus 1000%) at which the PID output interruption function is canceled.			

Parameters referred to		Refer to Section
59	Remote function selection	6.5.3
73	Analog input selection	6.15.1
79	Operation mode selection	6.17.1
178–182	Input terminal function selection	6.9.1
190/192/ 197	Output terminal function selection	6.9.5 6.11.2
261	Power failure stop selection	
561	PTC thermistor protection level	6.7.1
C2 (Pr. 902) – C7 (Pr. 905)	Frequency setting voltage (current) bias/ gain	6.15.3

The above parameters can be set when Pr. 160 = 0.

① Pr. 129, Pr. 130, Pr. 133 and Pr. 134 can be set during operation. They can also be set independently of the operation mode.

PID control basic configuration

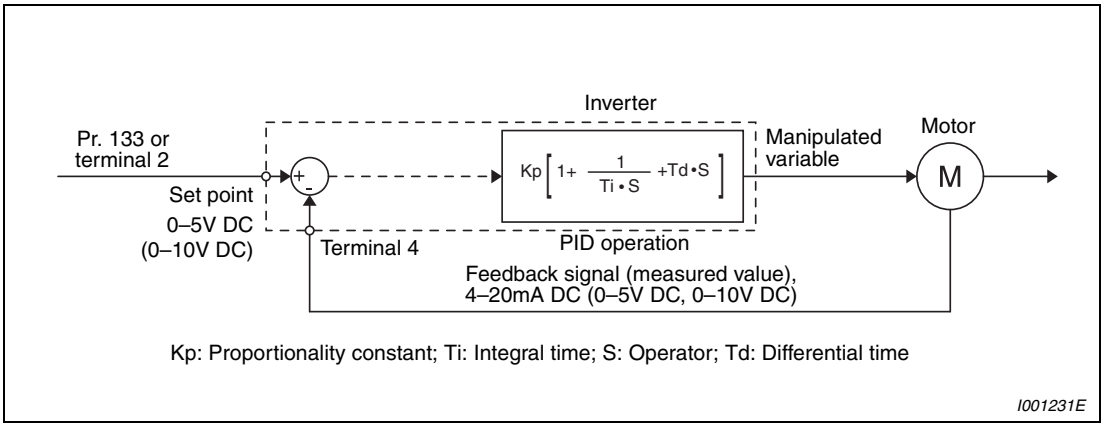

Fig. 6-119: *System configuration when Pr. 128 = 20 or 21 (set/feedback value at the inverter)*

PI action

A combination of P action (P) and I action (I) for providing a manipulated variable in response to deviation and changes with time.

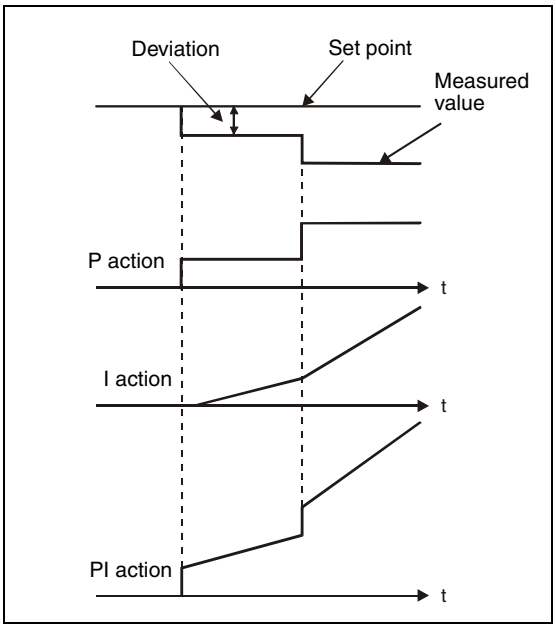

Fig. 6-120:
Operation example for stepped changes of measured value

PD action

A combination of P action (P) and differential control action (D) for providing a manipulated variable in response to deviation speed to improve the transient characteristic.

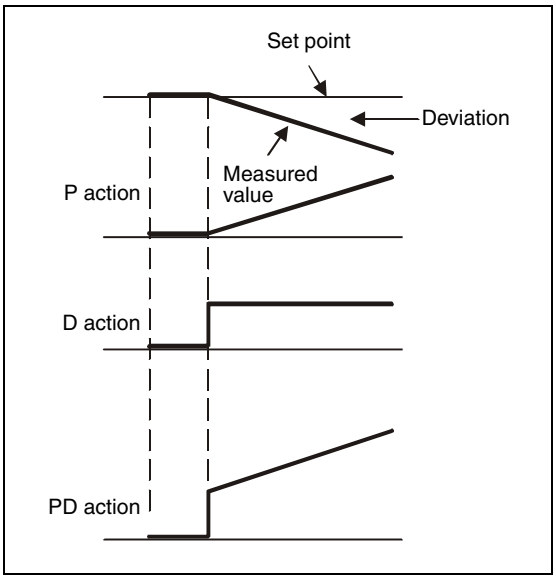

Fig. 6-121:
Operation example for proportional changes of measured value

I000046C

PID action

The PI action and PD action are combined to utilize the advantages of both actions for control.

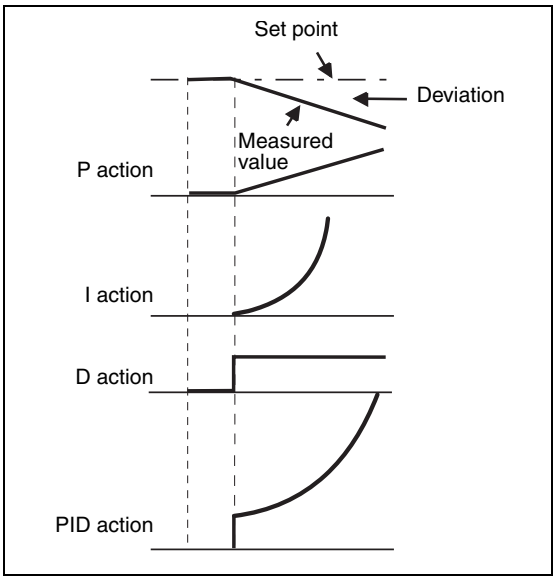

Fig. 6-122:
Operation example for proportional changes of measured value

I001233E

Reverse action

Increases the manipulated variable fi (output frequency) if deviation X = (set point – measured value) is positive, and decreases the manipulated variable if deviation is negative.

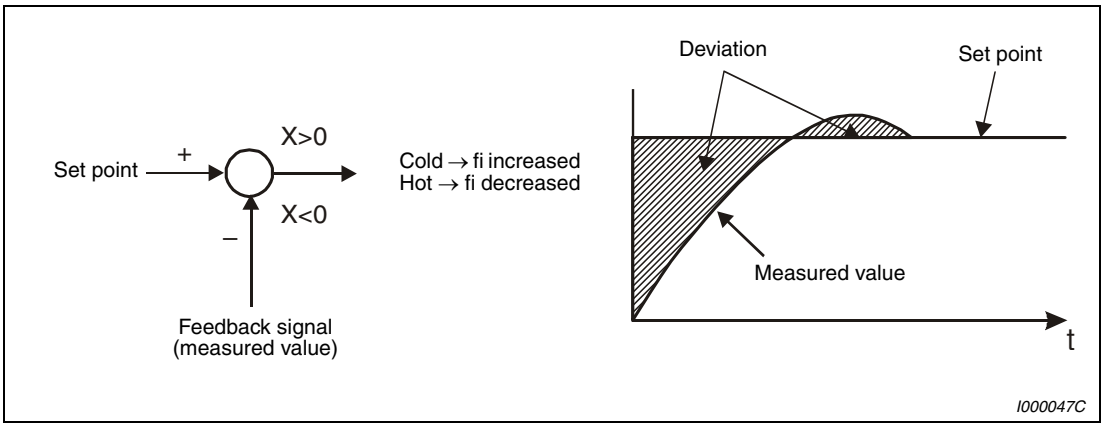

Fig. 6-123: *Heater*

Forward action

Increases the manipulated variable (output frequency) if deviation X = (set point – measured value) is negative, and decreases the manipulated variable if deviation is positive.

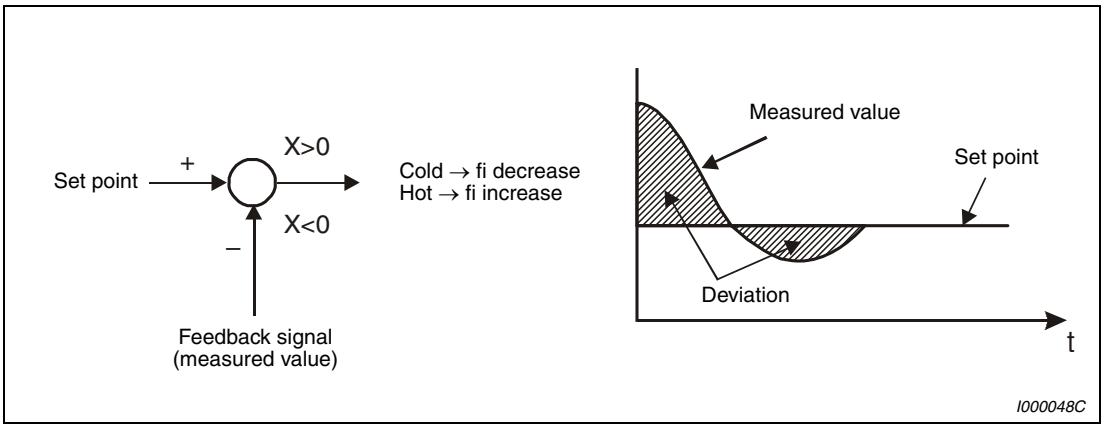

Fig. 6-124: *Cooling*

Relationships between deviation and manipulated variable (output frequency).

	Deviation	
	Positive	**Negative**
Reverse action	↗	↘
Forward action	↘	↗

Tab. 6-87: *Relationships between deviation and manipulated variable*

Connection diagram

The following graphic shows a typical application:

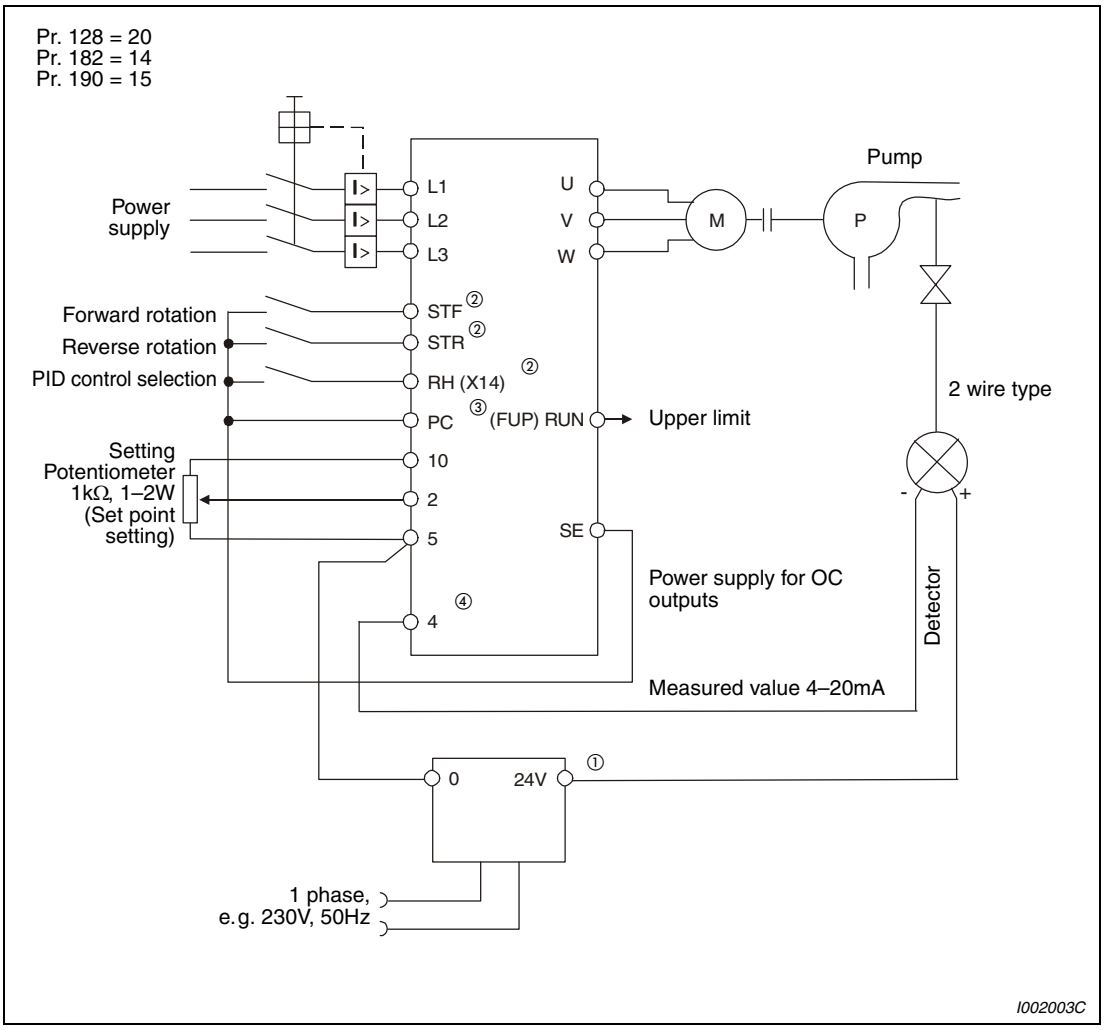

Fig. 6-125: *Connection diagram in source logic*

① The power supply must be selected in accordance with the power specifications of the detector used.

② The used input signal terminal changes depending on the Pr. 178 to Pr. 182 setting.

③ The used output signal terminal changes depending on the Pr. 190, Pr. 192 or Pr. 197 setting.

④ The AU signal need not be input.

I/O signals and parameter setting

① Set "20 or 21" in Pr. 128 to perform PID operation.

② Set "14" in any of Pr. 178 to Pr. 182 to assign PID control selection signal (X14) to turn the X14 signal on. When the X14 signal is not assigned, only the Pr. 128 setting makes PID control valid.

③ Enter the set point using the inverter terminal 2 or Pr. 133 and enter the measured value to terminal 4.

NOTES

When Pr. 128 = "0" or X14 signal is off, normal inverter operation is performed without PID action.

Turning ON/OFF of bit of the terminal, to which X14 signal is assigned through network as RS485 communication, enables PID control.

Signal		Terminal used	Function	Description	Parameter Setting
Input	X14	Depending on Pr. 178–182	PID control selection	Turn on X14 to perform PID control. ①	Set "14" to any of Pr. 178 to Pr. 182.
	2	2	Set point input	Enter the set point for PID control ⑤.	Pr. 128 = 20, 21; Pr. 133 = 9999
				0–5V.....0–100%	Pr. 73 = 1 ②, 11
				0–10V.....0–100%	Pr. 73 = 0, 10
	PU	—	Set point input	Set the set value (Pr. 133) from the operation panel.	Pr. 128 = 20, 21; Pr. 133 = 0–100% ④
	4	4	Measured value input	Input the signal from the detector (measured value signal).	Pr. 128 = 20, 21
				4–20mA.....0–100%	Pr. 267 = 0 ②
				0–5V.....0–100%	Pr. 267 = 1
				0–10V.....0–100%	Pr. 267 = 2

Tab. 6-88: *I/O signals and parameter settings (1)*

Signal		Terminal used	Function	Description	Parameter Setting
Output	FUP	Depending on Pr. 190/ 192/197	Upper limit output	Output to indicate that the measured value signal exceeded the upper limit value (Pr. 131).	Pr. 128 = 20, 21 Pr. 131 ≠ 9999 Set "15" or "115" to any of Pr. 190, Pr. 192 or Pr. 197. ③
	FDN		Lower limit output	Output when the measured value signal falls below the lower limit (Pr.132).	Pr. 128 = 20, 21 Pr. 132 ≠ 9999 Set "14" or "114" to any of Pr. 190, Pr. 192 or Pr. 197. ③
	RL		Forward (reverse) rotation direction output	"Hi" is output to indicate that the output indication of the parameter unit is forward rotation (FWD) or "Low" to indicate that it is reverse rotation (REV) or stop (STOP).	Set "16" or "116" to any of Pr. 190, Pr. 192 or Pr. 197. ③
	PID		During PID control activated	Turns on during PID control.	Set "47" or "147" to any of Pr. 190, Pr. 192 or Pr. 197. ③
	SLEEP		PID output interruption	Turns ON when the PID output interruption function is performed.	Pr. 575 ≠ 9999 Set "70" or "170" to any of Pr. 190, 192 or Pr. 197. ③
	SE	SE	Output terminal common	Common terminal for open collector output terminal.	

Tab. 6-88: *I/O signals and parameter settings (2)*

① When the X14 signal is not assigned, only the Pr. 128 setting makes PID control valid.

② The half-tone screened areas indicate the parameter initial values.

③ When "100" or larger value is set to any of Pr. 190, Pr. 192 or Pr. 197, the terminal output has negative logic. (Refer to section 6.9.5 for details.)

④ If Pr. 133 is used for the set point signal (setting ≠ 9999) any additional set point signal applied to terminals 2-5 will be ignored.

⑤ When Pr. 561 ≠ 9999), terminal 2 is not available for set point input. Use Pr. 133 for set point input.

NOTES

Changing the terminal function using any of Pr. 178 to Pr. 182, Pr. 190, Pr. 192 or Pr. 197 may affect the other functions. Make setting after confirming the function of each terminal.

When the Pr. 267 setting was changed, check the voltage/current input switch setting. Different setting may cause a fault, failure or malfunction. (Refer to page 6-148 for setting.)

PID control automatic switchover control (Pr. 127)

For a fast system start-up at an operation start, the system can be started up in normal operation mode only at a start.

When the frequency is set to Pr. 127 "PID control automatic switchover frequency" within the range 0 to 400Hz, the system starts up in normal operation mode from a start until Pr. 127 is reached, and then it shifts to PID control operation mode. Once the system has entered PID control operation, it continues PID control if the output frequency falls to or below Pr. 127.

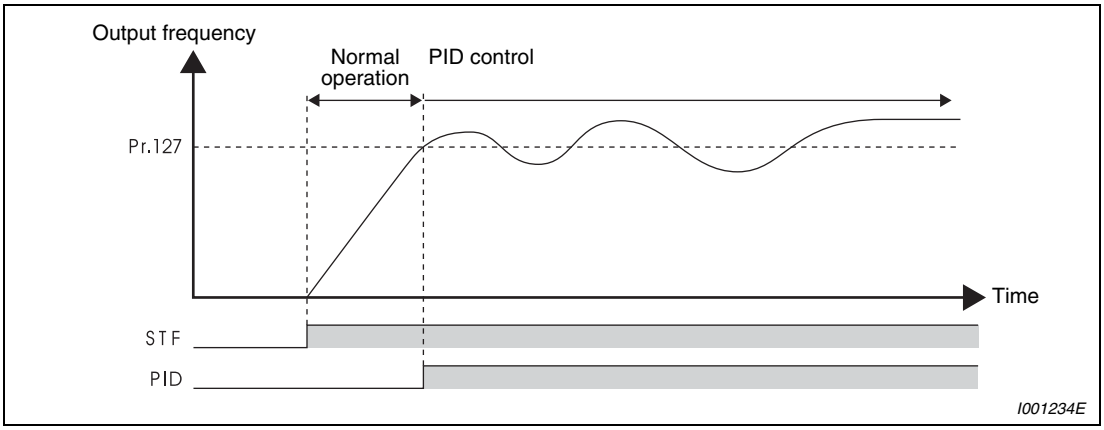

Fig. 6-126: *Automatic switchover to PID control*

PID output suspension function (SLEEP function) (SLEEP signal, Pr. 575 to Pr. 577)

The inverter stops operation if the output frequency after PID operation remains at less than the Pr. 576 setting for longer than the time set in Pr. 575. This function can reduce energy consumption in the low-efficiency, low-speed range.

When the deviation (= set value – measured value) reaches the PID output shutoff cancel level (Pr. 577 setting – 1000%), while the PID output interruption function is on, the PID output interruption function is canceled and PID control operation is resumed automatically.

While the PID output interruption function is on, the PID output interruption signal (SLEEP) is output. At this time, the inverter running signal (RUN) is OFF, and the PID control operating signal (PID) is ON.

For the terminal used for the SLEEP signal output, assign the function by setting "70" (positive logic) or "170" (negative logic) in Pr. 190, Pr. 192 or Pr. 197.

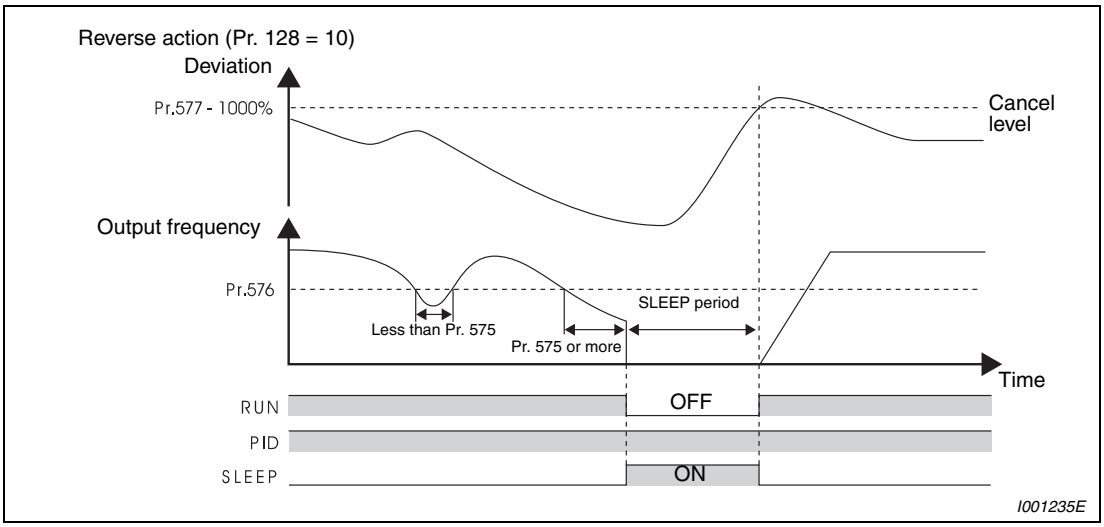

Fig. 6-127: *PID output suspension function (SLEEP function)*

PID monitor function

The PID control set point, measured value and deviation value can be displayed on the operation panel and output from terminal AM.

Integral value indicating a negative % can be displayed on the deviation monitor. 0% is displayed as 1000. (The deviation monitor cannot be output from the terminal AM.)

For each monitor, set the following value in Pr. 52 "DU/PU main display data selection" and Pr. 158 "AM terminal function selection".

Setting	Monitor Description	Minimum Increment	Terminal AM Full Scale	Remarks
52	PID set point	0.1%	100%	—
53	PID measurement value	0.1%	100%	
54	PID deviation value	0.1%	—	Value cannot be output from the terminal AM. The PID deviation value of 0% is displayed as 1000.

Tab. 6-89: *PID monitor function*

Adjustment procedure

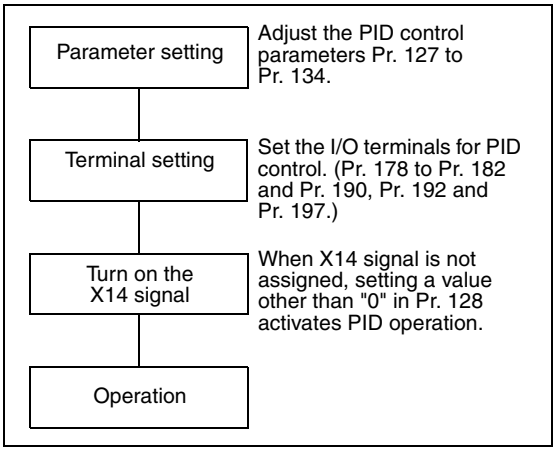

Fig. 6-128:
Adjustment procedure

Calibration example

Example ▽ A detector of 4mA at 0°C and 20mA at 50°C is used to adjust the room temperature to 25°C under PID control. The set point is given to across inverter terminals 2-5 (0 to 5V).

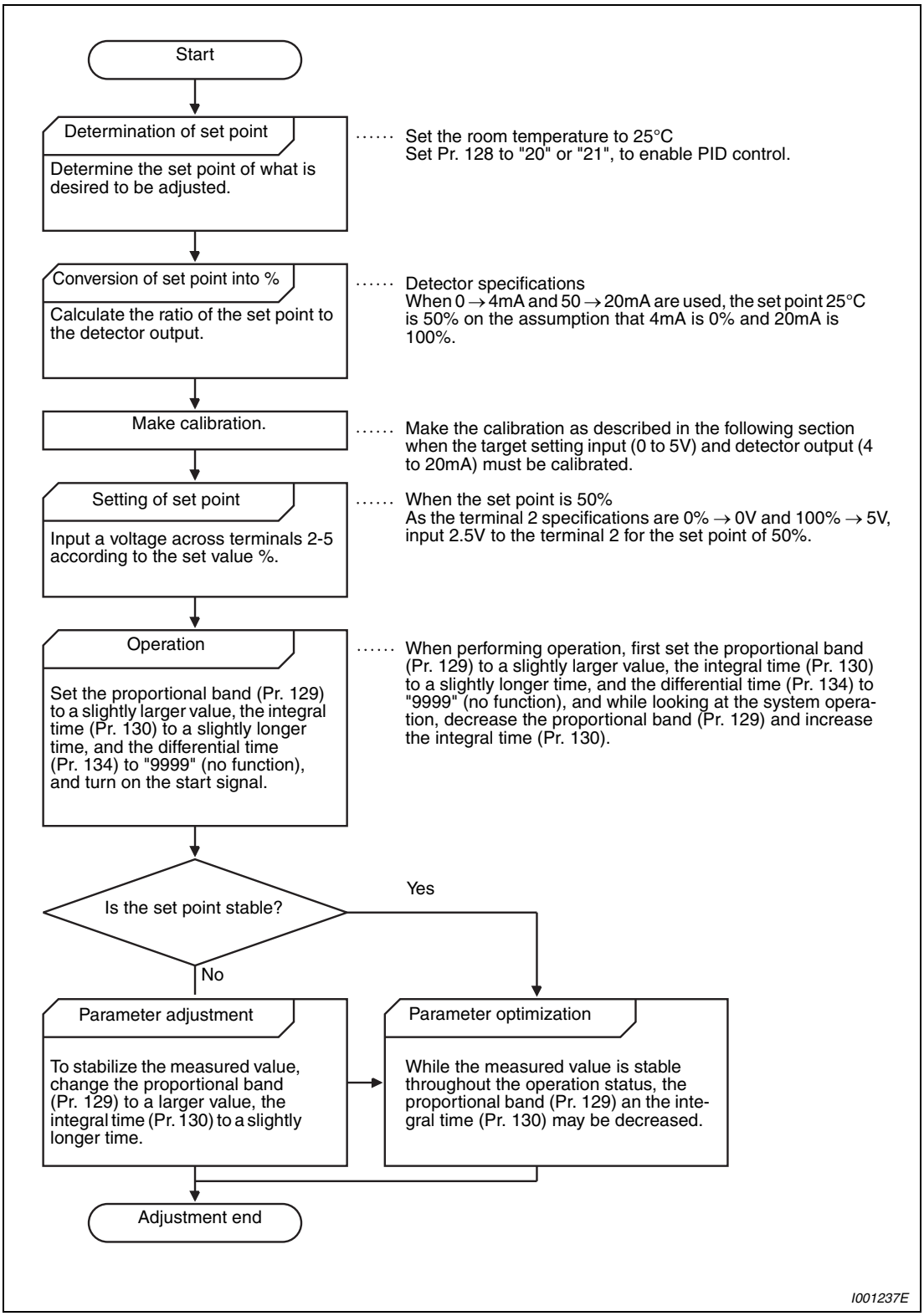

Fig. 6-129: *Calibration example*

Set point input calibration

① Apply the input voltage of 0% set point setting (e.g. 0V) across terminals 2-5.

② Enter in C2 (Pr. 902) the frequency which should be output by the inverter at the deviation of 0% (e.g. 0Hz).

③ In C3 (Pr. 902), set the voltage value at 0%.

④ Apply the voltage of 100% set point (e.g. 5V) to across terminals 2-5.

⑤ Enter in Pr. 125 the frequency which should be output by the inverter at the deviation of 100% (e.g. 50Hz).

⑥ In C4 (Pr. 903), set the voltage value at 100%.

Process value input calibration

① Apply the input current of 0% detector setting (e.g. 4mA) across terminals 4-5.

② Make calibration of the process value bias (%) using C6 (Pr. 904).

③ Apply the input current of 100% detector setting (e.g. 20mA) across terminals 4-5.

④ Make calibration of the process value gain (%) using C7 (Pr. 905).

NOTE

The frequency set in C5 (Pr. 904) and Pr. 126 should be the same as set in C2 (Pr. 902) and Pr. 125.

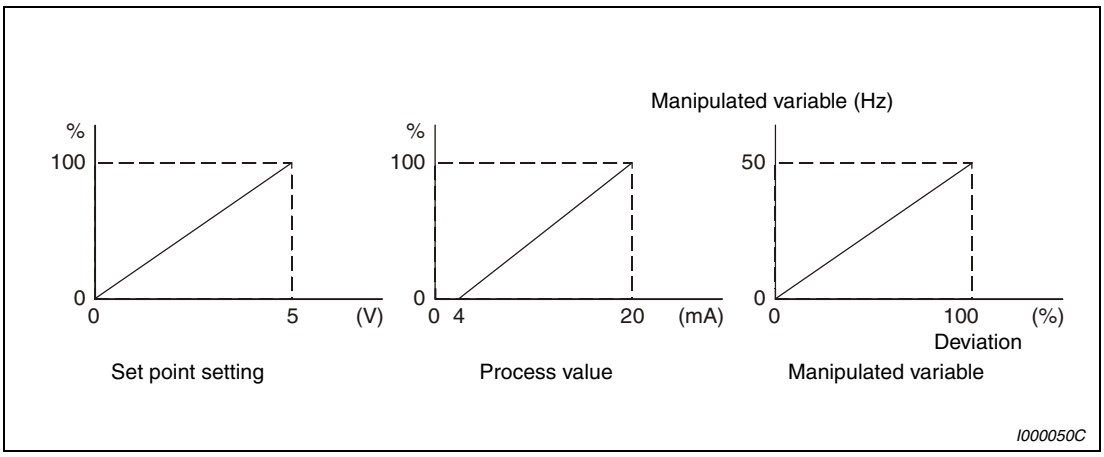

Fig. 6-130: *Input calibration*

NOTES

If the multi-speed (RH, RM, RL, REX signal) or jog operation (jog signal) is entered with the X14 signal on, PID control is stopped and multi-speed or jog operation is started.

If the setting is as follows, PID control becomes invalid. Pr. 79 "Operation mode selection" = 6 (switchover mode). When the inverter is at a stop with Pr. 261 "Power failure stop selection" selected.

Changing the terminal function using any of Pr. 178 to Pr. 182, Pr. 190, Pr. 192 or Pr. 197 may affect the other functions. Make setting after confirming the function of each terminal.

When PID control is selected, the minimum frequency is the frequency set in Pr. 902 and the maximum frequency is the frequency set in Pr. 903. (Pr. 1" Maximum frequency" and Pr. 2 "Minimum frequency" settings are also valid.)

The remote operation function is invalid during PID operation.

When the control is switched to PID control during normal operation, the frequency command value calculated by PID operation using 0Hz as standard is used without the frequency during the operation.

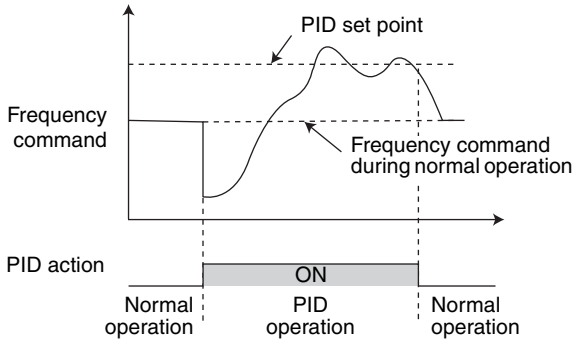

Operation when control is switched to PID control during normal operation

6.19.2 Dancer control (Pr. 44, Pr. 45, Pr. 128 to Pr. 134)

Performs PID control by feedbacking the position detection of the dancer roller, controlling the dancer roller is in thespecified position.

Pr. No.	Name	Initial Value		Setting Range	Description		
44	Second acceleration/ deceleration time	FR-D720S-008SC to 100SC, FR-D740-080SC or less	5s	0–3600s	This parameter is the acceleration time of the main speed during dancer control. It will not function as second acceleration/deceleration time.		
		FR-D740-120SC and 160SC	10s				
45	Second deceleration time	9999		0–3600s	This parameter is the deceleration time of the main speed during dancer control. It will not function as second deceleration time.		
				9999			
128	PID action selection	0		0	PID action is not performed		
				20	PID reverse action	Measured value (terminal 4) Set value (terminal 2 or Pr. 133)	
				21	PID forward action		
				40	PID reverse action	Addition method: fixed	For dancer control set point (Pr. 133), measured value (terminal 4) main speed (speed command of the operation mode)
				41	PID forward action		
				42	PID reverse action	Addition method: ratio	
				43	PID forward action		
129	PID proportional band ①	100%		0.1 – 1000%	If the proportional band is narrow (parameter setting is small), the manipulated variable varies greatly with a slight change of the measured value. Hence, as the proportional band narrows, the response sensitivity (gain) improves but the stability deteriorates, e.g. hunting occurs. Gain Kp = 1/proportional band		
				9999	No proportional control		
130	PID integral time ①	1s		0.1 – 3600s	For deviation step input, time (Ti) required for only the integral (I) action to provide the same manipulated variable as that for the proportional (P) action. As the integral time decreases, the set point is reached earlier but hunting occurs more easily.		
				9999	No integral control.		
131	PID upper limit	9999		0–100%	Maximum value If the feedback value exceeds the setting, the FUP signal is output. The maximum input (20mA/5V/10V) of the measured value (terminal 4) is equivalent to 100%.		
				9999	No function		
132	PID lower limit	9999		0–100%	Minimum value If the process value falls below the setting range, the FDN signal is output. The maximum input (20mA/5V/10V) of the measured value (terminal 4) is equivalent to 100%.		
				9999	No function		
133	PID action set point ①	9999		0–100%	Used to set the set point for PID control.		
				9999	Always 50%		
134	PID differential time ①	9999		0.01 – 10s	For deviation ramp input, time (Td) required for providing only the manipulated variable for the proportional (P) action. As the differential time increases, greater response is made to a deviation change.		
				9999	No differential control.		

Parameters referred to		Refer to Section
59	Remote function selection	6.5.3
73	Analog input selection	6.15.1
79	Operation mode selection	6.17.1
178–182	Input terminal function selection	6.9.1
190/192/197	Output terminal function selection)	6.9.5
561	PTC thermistor protection level	6.7.1
C2 (Pr. 902) – C7 (Pr. 905)	Frequency setting voltage (current) bias/ gain	6.15.3

The above parameters can be set when Pr. 160 = 0.

① Pr. 129, Pr. 130, Pr. 133 and Pr. 134 can be set during operation. They can also be set independently of the operation mode.

Dancer control block diagram

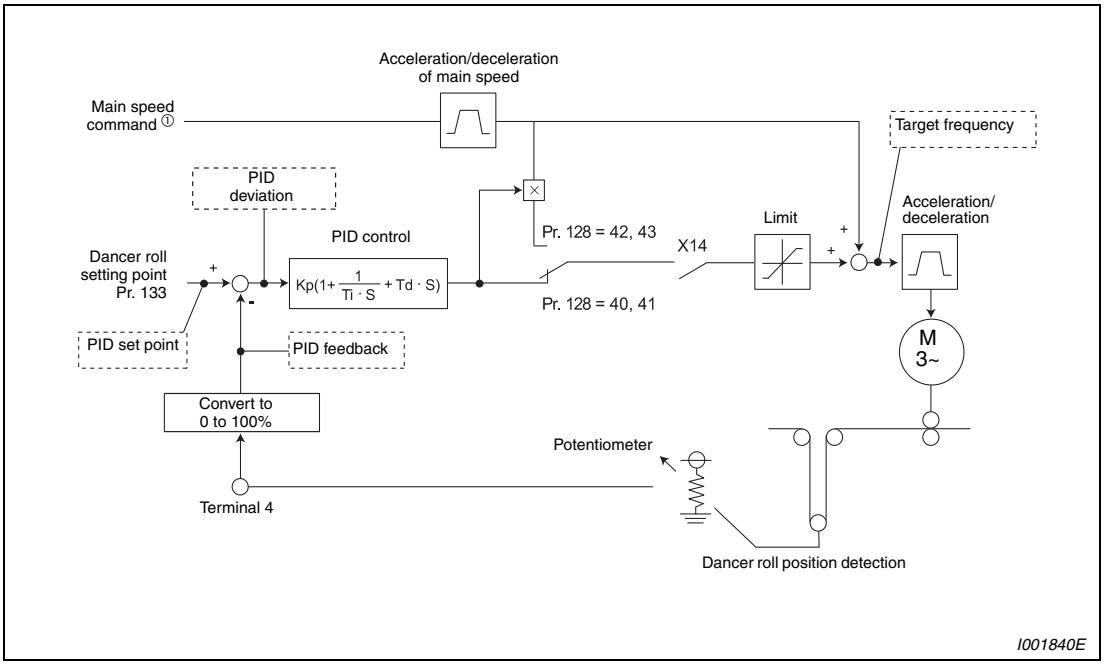

Fig. 6-131: *Dancer control block diagram*

① The main speed can be selected from all operation mode such as external (analog voltage input, multi-speed), PU (digital frequency setting), communication (RS485).

Set point and measured value of PID control

	Input	Input Signal	Pr. 267	Current/Voltage Input Switch
Set point	Pr. 133	0–100%	—	—
Measured value	When measured value is input as current (4 to 20mA).	4mA ... 0%, 20mA ... 100%	0	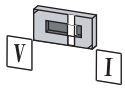
	When measured value is input as voltage (0 to ±5V or 0 to ±10V).	0V ... 0%, 5V ... 100%	1	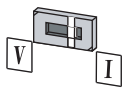
		0V ... 0%, 10V ... 100%	2	

Tab. 6-90: *Set point and measured value of PID control*

NOTES

Changing the terminal function using any of Pr.178 to Pr.182 may affect the other functions. Make setting after confirming the function of each terminal.

When the Pr. 267 setting was changed, check the voltage/current input switch setting. Different setting may cause a fault, failure or malfunction. (Refer to page 6-148 for setting.)

Dancer control overview

Performs dancer control by setting "40" to "43" in Pr. 128 "PID action selection". The main speed command is the speed command of each operation mode (external, PU, Network). Performs PID control by the position detection signal of the dancer roller, then the result is added to the main speed command. For acceleration/deceleration of the main speed, set the acceleration time in Pr. 44 "Second acceleration/deceleration time" and the deceleration time in Pr. 45 "Second deceleration time".

Set 0s normally to Pr. 7 "Acceleration time" and Pr. 8 "Deceleration time". When the Pr. 7 and Pr. 8 setting is large, response of dancer control during acceleration/deceleration is slow.

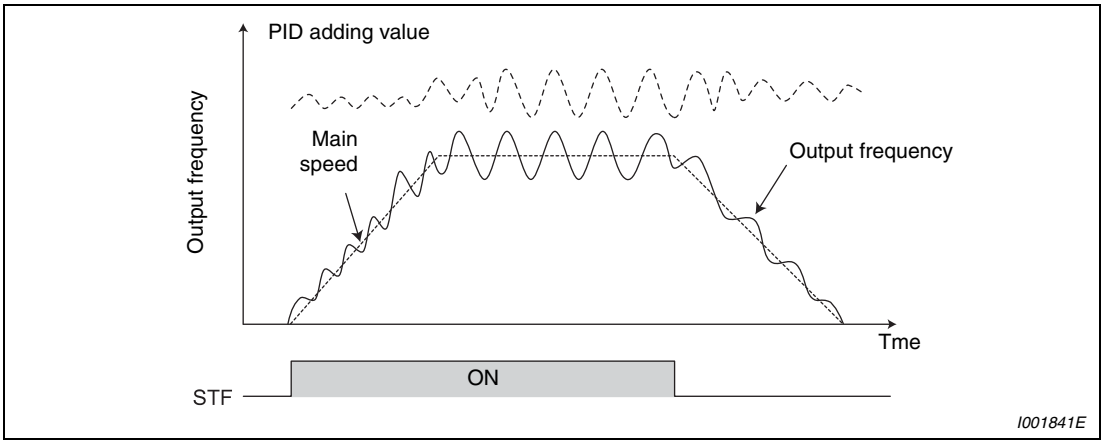

Fig. 6-132: *Signal overlay during dancer control*

Connection diagram

The following figure shows a typical application example:

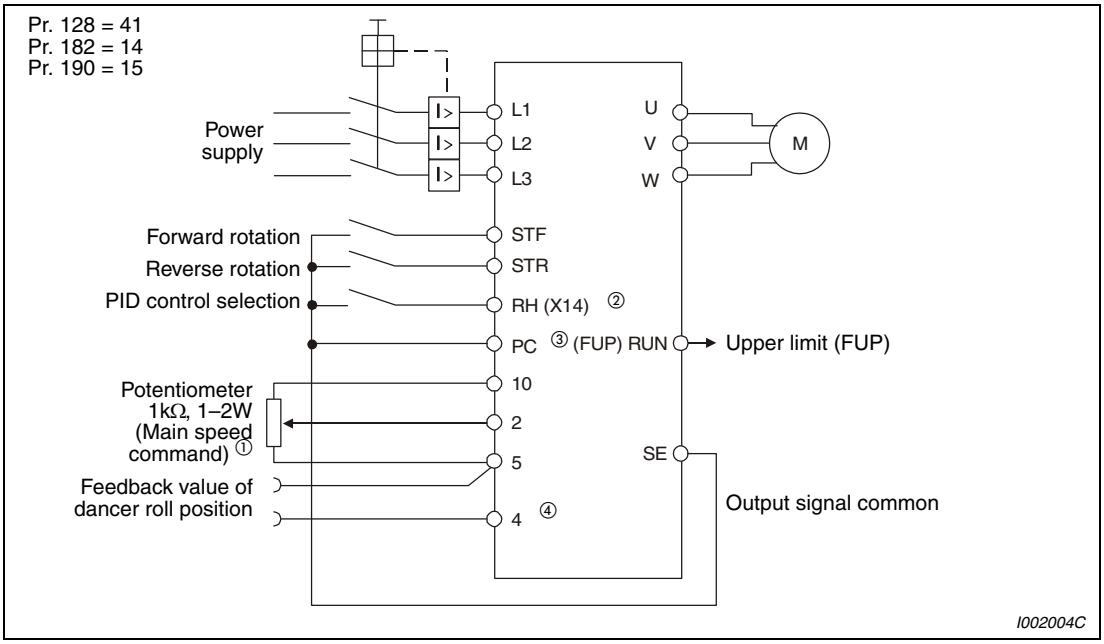

Fig. 6-133: *Example in source logic*

① The main speed command differs according to each operation mode (external, PU, network).
② The used input signal terminal changes depending on the Pr. 178 to Pr. 182 setting.
③ The used output signal terminal changes depending on the Pr. 190, Pr. 192 or Pr. 197 setting.
④ The AU signal need not be input.

I/O signals and parameter setting

① Set "40 to 43" in Pr. 128 to perform dancer control.

② Set "14" in any of Pr. 178 to Pr. 182 to assign PID control selection signal (X14) to turn the X14 signal on. When the X14 signal is not assigned, only the Pr. 128 setting makes dancer control valid.

③ Input the set point using Pr. 133, then input the measured value signal (dancer roller position detection signal) across terminal 4 and 5 of the inverter.

NOTES

When Pr. 128 = "0" or X14 signal is off, normal inverter operation is performed without dancer control.

Turning ON/OFF of bit of the terminal, to which X14 signal is assigned through network as RS485 communication, enables dancer control.

Signal		Terminal used	Function	Description	Parameter Setting
Input	X14	Depending on Pr. 178 to Pr. 182	PID control selection	Turn on X14 signal to perform dancer control. ①	Set "14" in any of Pr. 178 to Pr. 182.
Input	4	4	Measured value input	Input the signal from the dancer roller detector (measured value signal).	Pr. 128 = 40, 41, 42, 43
				4–20mA 0–100%	Pr. 267 = 0 ②
				0–5V 0–100%	Pr. 267 = 1
				0–10V 0–100%	Pr. 267 = 2
Output	FUP	Depending on Pr. 190/ 192/ 197	Upper limit output	Output to indicate that the measured value signal exceeded the maximum value (Pr. 131).	Pr. 128 = 40, 41, 42, 43 Pr. 131 ≠ 9999 Set "15" or "115" in any of Pr. 190, Pr. 192 or Pr. 197. ③
Output	FDN		Lower limit output	Output when the measured value signal falls below the minimum value (Pr. 132).	Pr. 128 = 40, 41, 42, 43 Pr. 132 ≠ 9999 Set "14" or "114" in any of Pr. 190, Pr. 192 or Pr. 197. ③
Output	RL		Forward (reverse) rotation direction output	Output is "ON" when the output indication of the parameter unit is forward rotation (FWD) and "OFF" when reverse rotation (REV) or stop (STOP).	Set "16" or "116" in any of Pr. 190, Pr. 192 or Pr. 197. ③
Output	PID		During PID control activated	Turns on during PID control.	Set "47" or "147" in any of Pr. 190, Pr. 192 or Pr. 197. ③
Output	SE	SE	Output terminal common	Common terminal for open collector output terminal.	

Tab. 6-91: *I/O signals and parameter setting*

① When the X14 signal is not assigned, only the Pr. 128 setting makes dancer control valid.

② The half-tone screened areas indicate the parameter initial values.

③ When 100 or larger value is set in any of Pr. 190, Pr. 192 or Pr. 197, the terminal output has negative logic. (For details, refer to section 6.9.5.)

NOTES

Changing the terminal function using any of Pr. 178 to Pr. 182, Pr. 190, Pr. 192 or Pr. 197 may affect the other functions. Make setting after confirming the function of each terminal.

When the Pr. 267 setting was changed, check the voltage/current input switch setting. Different setting may cause a fault, failure or malfunction. (Refer to page 6-148 for setting.)

Turn OFF PID output suspension function (Pr. 575 = "9999") while using dancer control.

When Pr. 561 PTC thermistor protection level ≠ "9999", terminal 2 is not available for main speed command. Terminal 2 is used as PTC thermistor input terminal.

Parameter details

When ratio (Pr. 128 = 42, 43) is selected for addition method, PID control × (ratio of main speed) is added to the main speed. The ratio is determined by the Pr. 125 "Terminal 2 frequency setting gain frequency" and C2 (Pr. 902) "Terminal 2 frequency setting bias frequency". The frequency setting signal is set to 0 to 50Hz in the range between 0 to 100% in the initial setting. The ratio is (× 100%) when the main speed is 50Hz and (× 50%) when 25Hz.

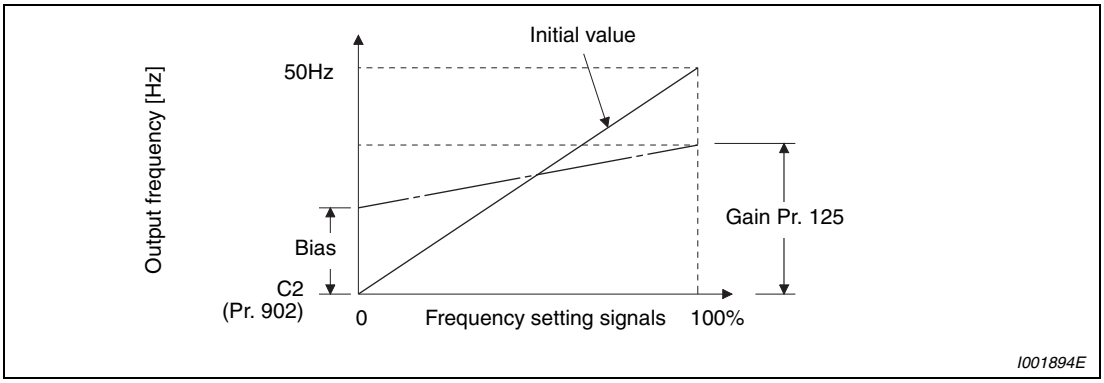

Fig. 6-134: *Signal calibration at terminal 2*

NOTES

Even when C4 (Pr. 903) is set to other than 100%, the frequency setting signal is considered as 100%.

Even when C3 (Pr. 903) is set to other than 0%, the frequency setting signal is considered as 0%.

When C2 (Pr .902) is set to other than 0Hz, the frequency setting signal is 0% when C2 (Pr. 902) is less than the set frequency.

Turning X14 signal on/off during operation by assigning X14 signal results in the following operation.

When X14 signal is on: Uses output frequency unchanged as the main speed command and continues operation by dancer control.

When X14 signal is off: Ends dancer control and continues operation at the set frequency made valid.

Pr. 128	PID Action	Addition Method	Set Point	Measured Value	Main Speed Command
40	Reverse action	Fixed	Pr. 133	Terminal 4	Speed command for each operation mode
41	Forward action				
42	Reverse action	Ratio			
43	Forward action				

Tab. 6-92: *PID control in dependence of parameter 128*

Action of Pr. 129 "PID proportional band", Pr. 130 "PID integral time", Pr. 131 "PID upper limit", Pr. 132 "PID lower limit", Pr. 134 "PID differential time is the same as PID control. For the relationship of controlled variable (%) of PID control and frequency, 0% is equivalent to the set frequency of Pr. 902 and 100% to Pr. 903.

For the Pr. 133 "PID action set point" setting, set frequency of Pr. 902 is equivalent to 0% and Pr. 903 to 100%. When 9999 is set in Pr. 133, 50% is the set point.

NOTE

Pr. 127 "PID control automatic switchover frequency" is invalid.

Output signal

Output terminal assignment during dancer control (PID control) operation
PID signal turns on during dancer control (PID control) or at a stop by PID control (in the status PID operation being performed inside) (The signal is off during normal operation.)

For the terminal used for PID signal output, assign the function by setting "47 (positive logic) or 147 (negative logic)" in any of Pr. 190, Pr. 192 or Pr. 197.

NOTE

Changing the terminal function using any of Pr. 178 to Pr. 182, Pr. 190, Pr. 192 or Pr. 197 may affect the other functions. Make setting after confirming the function of each terminal.

PID monitor function

The PID control set point and measured value can be output to the operation panel monitor display and terminal AM.
For each monitor, set the following value in Pr. 52 "DU/PU main display data selection" and Pr. 158 "AM terminal function selection".

Setting	Monitor Description	Minimum Increments	Terminal AM Full Scale	Remarks
52	PID set point	0.1%	100%	—
53	PID measured value	0.1%	100%	
54	PID deviation value	0.1%	—	Value cannot be output from the terminal AM. The PID deviation value of 0% is displayed as 1000.

Tab. 6-93: *PID monitor function*

Priorities of main speed command

The priorities of the main speed speed command source when the speed command source is external are as follows:
JOG signal > multi-speed setting signal (RL/RM/RH/REX) > terminal 2.

The priorities of the main speed speed command source when "3" is set in Pr. 79:
Multi-speed setting signal (RL/RM/RH/REX) > set frequency (digital setting by PU, operation panel).

Terminal 4 can not be selected as the main speed speed command even when AU terminal is turned on.

Even when a remote operation function is selected by setting a value other than "0" in Pr. 59, compensation of the remote setting frequency to the main speed is ignored (changes to 0).

Dancer roller position detection signal adjustment

When terminal 4 input is voltage input, 0V is minimum position and 5V (10V) is maximum position. When current is input, 4mA is minimum position and 20mA is maximum position (initial value). When 0 to 7V is output from the potentiometer, it is necessary to calibrate C7 (Pr. 905) at 7V.

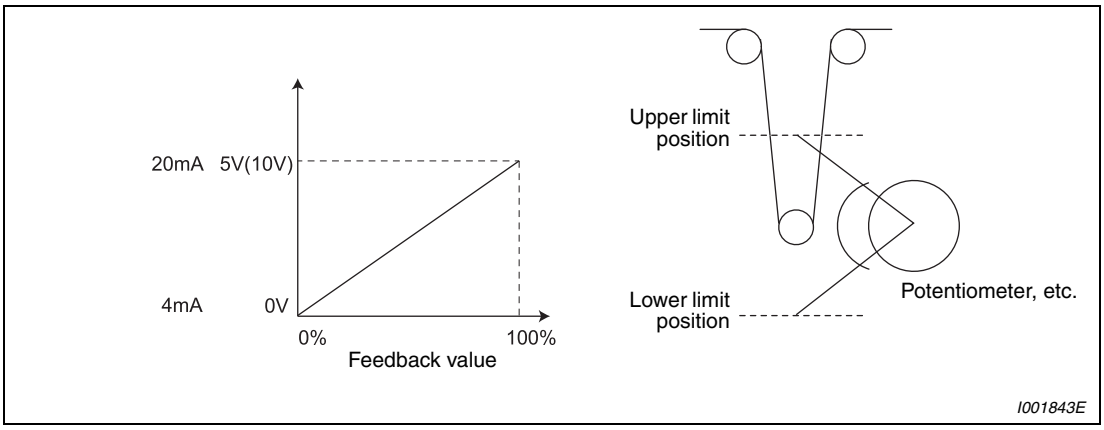

Fig. 6-135: *Dancer roller position detection signal adjustment*

Example ▽ Control at a dancer center position using a 0 to 7V potentiometer

① After changing the current/voltage input switch to "V", set "2" in Pr. 267 to change terminal 4 input to voltage input.

② Input 0V to across terminal 4 and 5 to calibrate C6 (Pr. 904). (% display displayed at analog calibration is irrelevant to % of the feed back value.)

③ By inputting 7V to across terminal 4 to 5, calibrate C7 (Pr. 905). (% display displayed at analog calibration is irrelevant to % of the feed back value.)

④ Set 50% in Pr.133.

NOTE When the Pr. 267 setting was changed, check the voltage/current input switch setting. Different setting may cause a fault, failure or malfunction. (Refer to page 6-148 for setting.)

△

NOTES

In normal PID control, PID control is stopped when multi-speed operation signal (RH, RM, RL, REX signal) or JOG signal is input. In dancer control, however, PID control continues handling the signals as the main speed.

During dancer control, Second acceleration/deceleration time of Pr. 44 and Pr. 45 are the parameters for acceleration/deceleration time setting to the main speed command source. They do not function as the second function.

When switchover mode is set with "6" in Pr. 79 , dancer control (PID control) is invalid.

Speed command of terminal 4 input from terminal AU is invalid when dancer control is selected.

Acceleration/deceleration of the main speed command is the same operation as when frequency command is increased/decreased by analog input.

- Therefore, SU signal remains on even if the starting signal is turned on/off (always in the constant speed state).
- The DC brake operation starting frequency when turning off the starting signal is not Pr. 10 but a smaller value of either Pr. 13 or 0.5Hz.
- The set frequency monitor is always variable as "main speed command+PID control".

The main speed setting frequency accelerates for the acceleration/deceleration time set in Pr. 44 and Pr. 45 and the output frequency accelerates/decelerates for the acceleration/deceleration time set in Pr. 7 and Pr. 8. Therefore, when the set time of Pr. 7 and Pr. 8 is longer than Pr. 44 and Pr. 45, the output frequency accelerates/decelerates for the acceleration/deceleration time set in Pr. 7 and Pr. 8.

For the integral term limit, a smaller value of either the PID manipulated variable (%) value converted from the linear, interpolated Pr. 1 "Maximum frequency" with Pr. 902 and Pr. 903, or 100% is used for limit. Although the output frequency is limited by the minimum frequency, operation limit of the integral term is not performed.

6.19.3 Traverse function (Pr. 592 to Pr. 597)

Die Funktion ermöglicht den Betrieb mit einer zyklischen Änderung der Ausgangsfrequenz. Die Funktion wird beispielsweise in der Textilindustrie bei Wickelvorgängen verwendet.

Pr. No.	Name	Initial Value	Setting Range	Description
592	Traverse function selection	0	0	Traverse function invalid
			1	Traverse function is valid only in the External operation mode
			2	Traverse function is valid independently of operation mode
593	Maximum amplitude amount	10%	0–25%	Amplitude amount during traverse operation
594	Amplitude compensation amount during deceleration	10%	0–50%	Compensation amount at the time of amplitude inversion (acceleration to deceleration)
595	Amplitude compensation amount during acceleration	10%	0–50%	Compensation amount at the time of amplitude inversion (deceleration to acceleration)
596	Amplitude acceleration time	5 s	0.1–3600s	Acceleration time during traverse operation
597	Amplitude deceleration time	5 s	0.1–3600s	Deceleration time during traverse operation

Parameters referred to		Refer to Section
1	Maximum frequency	6.3.1
2	Minimum frequency	6.3.1
7	Acceleration time	6.6.1
8	Deceleration time	6.6.1
29	Acceleration/deceleration pattern selection	6.6.3
178–182	Input terminal function selection	6.9.1

The above parameters can be set when Pr. 160 = 0.

When "1" or "2" is set in Pr. 592, turning on the traverse operation signal (X37) makes the traverse function valid.

Set "37" in any of Pr. 178 to Pr. 182 and assign the X37 signal to the external terminal. When the X37 signal is not assigned to the input terminal, the traverse function is always valid (X37-ON).

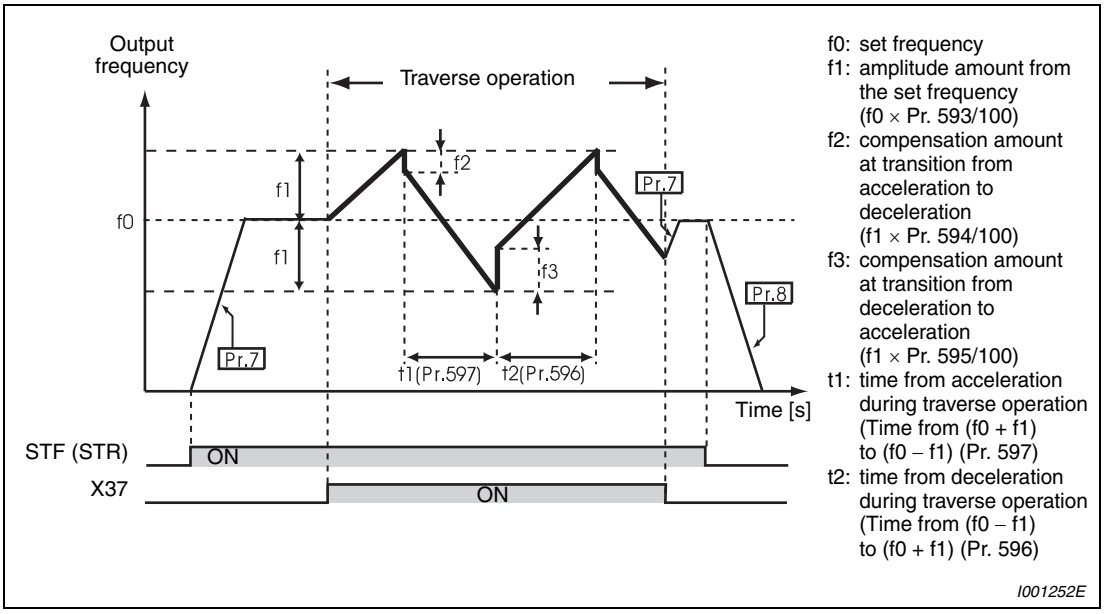

Fig. 6-136: *Traverse function*

When the starting command (STF or STR) is switched on, the output frequency accelerates to the set frequency f0 according to the set acceleration time in Pr. 7.

When the output frequency reaches f0, traverse operation can be started by switching the X37 signal on, then the frequency accelerates to f0 + f1. (The acceleration time at this time depends on the Pr. 596 setting.)

After having accelerated to f0 + f1, compensation of f2 (f1 × Pr. 594) is made and the frequency decreases to f0-f1. (The deceleration time at this time depends on the Pr. 597 setting.)

After having decelerated to f0 – f1, compensation of f3 (f1 × Pr. 595) is made and the frequency again accelerates to f0 + f1.

If the X37 signal is turned off during traverse operation, the frequency accelerates/decelerates to f0 according to the normal acceleration/deceleration time (Pr. 7, Pr. 8). If the start command (STF or STR) is turned off during traverse operation, the frequency decelerates to a stop according to the normal deceleration time (Pr. 8).

NOTES

When the second function signal (RT) is on, normal acceleration/deceleration time (Pr. 7, Pr. 8) is the same as second acceleration/deceleration time (Pr. 44, Pr. 45).

If the set frequency (f0) and traverse operation parameters (Pr. 593 to Pr. 597) are changed, pattern operation is performed at changed f0 after the output frequency reached f0 before change.

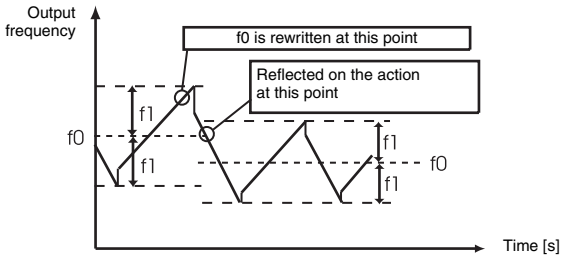

When the output frequency exceeds Pr. 1 Maximum frequency or Pr. 2 Minimum frequency, the output frequency is clamped at maximum/minimum frequency while the set pattern exceeds the maximum/minimum frequency.

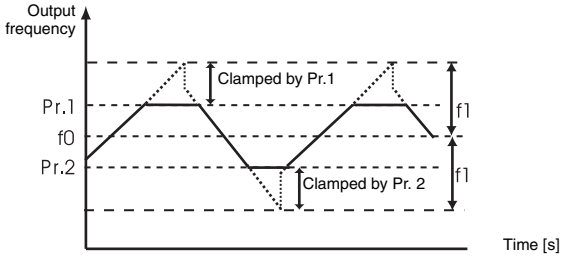

NOTES

When the traverse function and S-pattern acceleration/deceleration (Pr. 29 ≠ 0), vare selected, S-pattern acceleration/deceleration is performed only in the areas where operation is performed in normal Acceleration and deceleration time (Pr. 7, Pr. 8). For acceleration/deceleration during traverse operation, linear acceleration/deceleration is made.

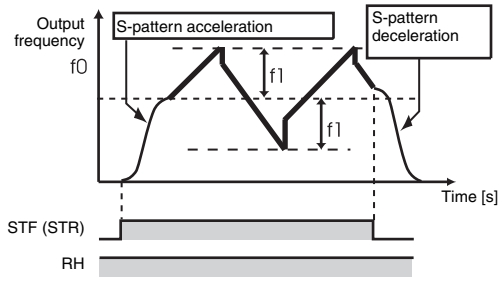

When stall prevention is activated during traverse operation, traverse operation is stopped and normal operation is performed. When stall prevention operation ends, the motor accelerates/decelerates to f0 in normal acceleration/deceleration time (Pr. 7, Pr. 8). After the output frequency reaches f0, traverse operation is again performed.

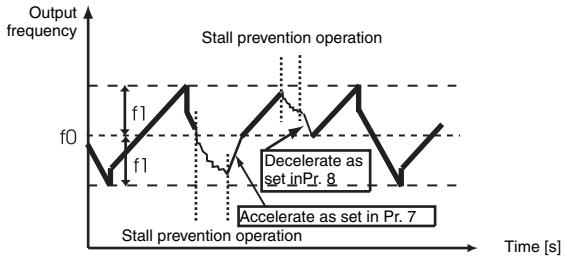

.

When the value of amplitude inversion compensation amount (Pr. 594, Pr. 595) is too large, pattern operation as set is not performed due to overvoltage shut-off and stall prevention.

Changing the terminal assignment using Pr. 178 to Pr. 182 may affect the other functions. Please make setting after confirming the function of each terminal.

6.19.4 Regeneration avoidance function (Pr. 665, Pr. 882, Pr. 883, Pr. 885, Pr. 886)

This function detects a regeneration status and increases the frequency to avoid the regeneration status.

Possible to avoid regeneration by automatically increasing the frequency and continue operation if the fan happens to rotate faster than the set speed due to the effect of another fan in the same duct.

Pr. No.	Name	Initial Value		Setting Range	Description
882	Regeneration avoidance operation selection	0		0	Regeneration avoidance function invalid
				1	Regeneration avoidance function is always valid
				2	Regeneration avoidance function is valid only during a constant speed operation
883	Regeneration avoidance operation level	200V class	400V DC	300–800V	Set the bus voltage level at which regeneration avoidance operates. When the bus voltage level is set to low, over voltage error will be less apt to occur. However, the actual deceleration time increases. The set value must be higher than the power supply voltage × $\sqrt{2}$.
		400V class	780V DC		
885	Regeneration avoidance compensation frequency limit value	6Hz		0–10Hz	Set the limit value of frequency which rises at activation of regeneration avoidance function.
				9999	Frequency limit invalid
886	Regeneration avoidance voltage gain	100%		0–200%	Responsiveness at activation of regeneration avoidance. A larger setting will improve responsiveness to the bus voltage change. However, the output frequency could become unstable. When vibration is not suppressed by decreasing the Pr. 886 setting, set a smaller value in Pr. 665.
665	Regeneration avoidance frequency gain	100%		0–200%	

Parameters referred to		Refer to Section
1	Maximum frequency	6.3.1
8	Deceleration time	6.6.1
22	Stall prevention operation level	6.2.4

The above parameters can be set when Pr. 160 = 0.

Regeneration avoidance function (Pr. 882, Pr. 883)

When the regeneration status is serious, the DC bus voltage rises and an over voltage alarm (E.OV□) may occur. When this bus voltage rise is detected and the bus voltage level reaches or exceeds Pr. 883, increasing the frequency avoids the regeneration status.

The regeneration avoidance function is always on when "1" is set in Pr. 882 and activated only during a constant speed when "2" is set in Pr. 882.

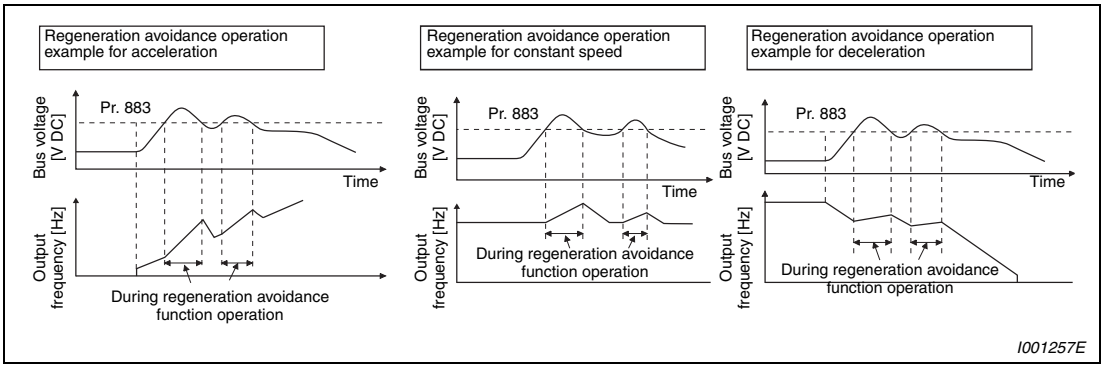

Fig. 6-137: *Regeneration avoidance function*

NOTES

The inclination of the frequency increased or decreased by the regeneration avoidance function changes depending on the regeneration status.

The DC bus voltage of the inverter is normally about $\sqrt{2}$ times greater than the input voltage (when the input voltage is 220 V, the bus voltage is about 311 V DC and when the input voltage is 440V AC, the bus voltage is about 622V DC). However, it varies with the input power supply waveform.

The Pr. 883 setting should be kept higher than the DC bus voltage level. Otherwise, the regeneration avoidance function is always on.

While over voltage stall (oL) stops the output frequency during deceleration, the regeneration avoidance function is always on and increases the frequency according to the regeneration amount.

Limit regeneration avoidance operation frequency (Pr. 885)

You can limit the output frequency compensated for (increased) by the regeneration avoidance function.

The frequency is limited to the output frequency (frequency prior to regeneration avoidance operation) + Pr. 885 "Regeneration avoidance compensation frequency limit value" during acceleration or constant speed. If the regeneration avoidance frequency exceeds the limit value during deceleration, the limit value is held until the output frequency falls to 1/2 of Pr. 885.

When the regeneration avoidance frequency has reached Pr. 1 "Maximum frequency", it is limited to the maximum frequency.

When Pr. 885 is set to "9999", the frequency setting is invalid.

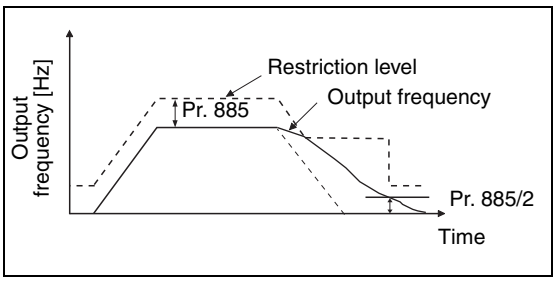

Fig. 6-138:
Limit the output frequency

Regeneration avoidance function adjustment (Pr. 665, Pr. 886)

If the frequency becomes instable during regeneration avoidance operation, decrease the setting of Pr. 886 "Regeneration avoidance voltage gain". Reversely, if sudden regeneration causes an overvoltage alarm, increase the setting.

When vibration is not suppressed by decreasing the Pr. 886 setting, set a smaller value in Pr. 665 "Regeneration avoidance frequency gain".

NOTES

When regeneration avoidance operation is performed, "oL" (over voltage stall) is displayed and the OL signal is output.

When regeneration avoidance operation is performed, stall prevention is also activated at the same time.

The regeneration avoidance function cannot shorten the actual deceleration time taken to stop the motor. The actual deceleration time depends on the regeneration energy consumption capability. When shortening the deceleration time, consider using the regeneration unit (FR-BU2, FR-CV, FR-HC) and brake resistor (FR-ABR etc.) to consume regeneration energy at constant speed.

When using the regeneration unit (FR-BU2, FR-CV, FR-HC) or a brake resistor (FR-ABR etc.), set Pr. 882 to "0 (initial value)" (regeneration avoidance function invalid). When using the regeneration unit, etc. to consume regeneration energy at deceleration, set Pr. 882 to "2" (regeneration avoidance function valid only at a constant speed).

When regeneration avoidance operation is performed, the OL signal output item of Pr. 156 also becomes the target of oL (over voltage stall). Pr. 157 "OL signal output timer" also becomes the target of (over voltage stall).

6.20 Useful functions

Purpose	Parameters that must be set		Refer to Section
Increase cooling fan life	Cooling fan operation selection	Pr. 244	6.20.1
To determine the maintenance time of parts.	Inverter part life display	Pr. 255–Pr. 259	6.20.2
	Maintenance output function	Pr. 503–Pr. 504	6.20.3
	Current average value monitor signal	Pr. 555–Pr. 557	6.20.4
Freely available parameter	Free parameter	Pr. 888–Pr. 889	6.20.5

6.20.1 Cooling fan operation selection (Pr. 244)

You can control the operation of the cooling fan (FR-D720S-070SC or more, FR-D740-036SC or more) built in the inverter.

Pr. No.	Name	Initial Value	Setting Range	Description
244	Cooling fan operation selection	1	0	Operates at power on Cooling fan on/off control invalid (The cooling fan is always on at power on)
			1	Cooling fan on/off control valid The fan is always on while the inverter is running. During a stop, the inverter status is monitored and the fan switches on-off according to the temperature of the heatsink.

Parameters referred to		Refer to Section
190/192/197	Output terminal function selection	6.9.5

The above parameter can be set when Pr. 160 = 0.

In either of the following cases, fan operation is regarded as faulty, "FN" is shown on the operation panel, and the fan fault "FAN" and alarm "LF" signals are output.

Pr. 244 = 0
When the fan comes to a stop with power on.

Pr. 244 = 1
When the fan stops during the fan ON command while the inverter is running.

For the terminal used for FAN signal output, set "25" (source logic) or "125" (sink logic) to any of Pr. 190, Pr. 192 or Pr. 197 "Output terminal function selection", and for the LF signal, set "98" (source logic) or "198" (sink logic).

NOTE

When terminal assignment is changed using Pr. 190, Pr. 192 or Pr. 197, the other functions may be affected. Please make setting after confirming the function of each terminal.

6.20.2 Display of the life of the inverter parts (Pr. 255 to Pr. 259)

Degrees of deterioration of main circuit capacitor, control circuit capacitor, cooling fan and inrush current limit circuit and can be diagnosed by monitor.
When any part has approached the end of its life, an alarm can be output by self diagnosis to prevent a fault. (Use the life check of this function as a guideline since the life except the main circuit capacitor is calculated theoretically.) For the life check of the main circuit capacitor, the alarm signal (Y90) will not be output if a measuring method shown on page 6-274 is not performed.

Pr. No.	Name	Initial Value	Setting Range	Description
255	Life alarm status display	0	(0–15)	Display whether the control circuit capacitor, main circuit capacitor, cooling fan, and each parts of the inrush current limit circuit has reached the life alarm output level or not. Reading only
256	Inrush current limit circuit life display	100%	(0–100%)	Display the deterioration degree of the inrush current limit circuit. Reading only
257	Control circuit capacitor life display	100%	(0–100%)	Display the deterioration degree of the control circuit capacitor. Reading only
258	Main circuit capacitor life display	100%	(0–100%)	Display the deterioration degree of the main circuit capacitor. Reading only The value measured by Pr. 259 is displayed.
259	Main circuit capacitor life measuring	0	0/1 (2/3/8/9)	Setting "1" and switching the power supply off starts the measurement of the main circuit capacitor life (refer to the following pages). When the Pr. 259 value is "3" after powering on again, the measuring is completed. Read the deterioration degree in Pr. 258.

Parameters referred to		Refer to Section
190/192/ 197	Output terminal function selection	6.9.5

The above parameters can be set when Pr. 160 = 0.

NOTE Since repeated inrush currents at power ON will shorten the life of the converter circuit, frequent starts and stops of the magnetic contactor must be avoided.

Life alarm display and signal output (Y90 signal, Pr. 255)

Whether any of the control circuit capacitor, main circuit capacitor, cooling fan and inrush current limit circuit has reached the life alarm output level or not can be checked by Pr. 255 "Life alarm status display" and life alarm signal (Y90).

① Read the setting of parameter 255.

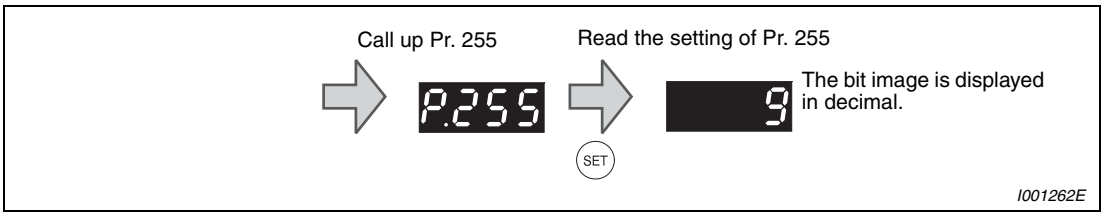

Fig. 6-139: *Read parameter 255*

② When the life alarm output level is reached, the bits are set as follows.

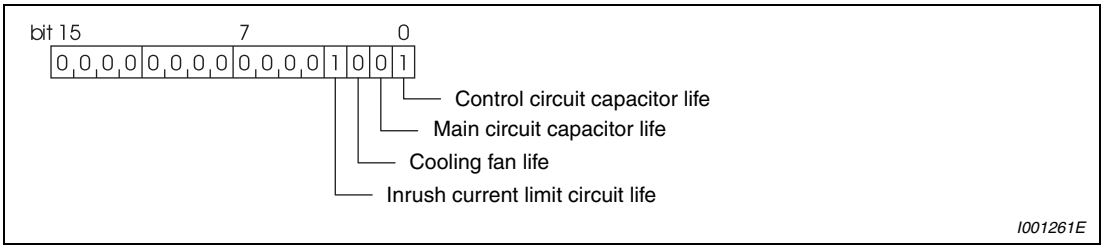

Fig. 6-140: *Bits of parameter 255*

Pr. 255 (decimal)	Bits (binary)	Inrush Current Limit Circuit Life	Cooling Fan Life	Main Circuit Capacitor Life	Control Circuit Capacitor Life
15	1111	✔	✔	✔	✔
14	1110	✔	✔	✔	—
13	1101	✔	✔	—	✔
12	1100	✔	✔	—	—
11	1011	✔	—	✔	✔
10	1010	✔	—	✔	—
9	1001	✔	—	—	✔
8	1000	✔	—	—	—
7	0111	—	✔	✔	✔
6	0110	—	✔	✔	—
5	0101	—	✔	—	✔
4	0100	—	✔	—	—
3	0011	—	—	✔	✔
2	0010	—	—	✔	—
1	0001	—	—	—	✔
0	0000	—	—	—	—

Tab. 6-94: *Displaying the end of service life by bits*

✔: End of the service life is reached
—: End of the service life is not reached

The life alarm signal (Y90) turns on when any of the control circuit capacitor, main circuit capacitor, cooling fan and inrush current limit circuit reaches the life alarm output level.

For the terminal used for the Y90 signal, set "90" (source logic) or "190" (sink logic) to any of Pr. 190, Pr. 192 or Pr. 197.

NOTE

When terminal assignment is changed using Pr. 190, Pr. 192 or Pr. 197, the other functions may be affected. Please make setting after confirming the function of each terminal.

Life display of the inrush current limit circuit (Pr. 256)

The life of the inrush current limit circuit (relay, contactor and inrush resistor) is displayed in Pr. 259.

Activation of inrush current limit resistor circuit is counted. It is counted every 10,000 times (1%) and counts down from 100% (0 time). As soon as 10% (900,000 times) is reached, Pr. 255 bit 3 is turned on and also an alarm is output to the Y90 signal.

The inrush current limit resistor circuit activates under the following conditions:

– At power-ON

– At undervoltage occurrence (refer to page 7-8)

– At inverter reset

Control circuit capacitor life display (Pr. 257)

The deterioration degree of the control circuit capacitor is displayed in Pr. 257 as a life.

In the operating status, the control circuit capacitor life is calculated from the energizing time and temperature of the inverter's heatsink, and is counted down from 100%. As soon as the control circuit capacitor life falls below 10%, Pr. 255 bit 0 is turned on and also an alarm is output to the Y90 signal.

Main circuit capacitor life display (Pr. 258, Pr. 259)

The deterioration degree of the main circuit capacitor is displayed in Pr. 258 as a life.

On the assumption that the main circuit capacitor capacitance at factory shipment is 100%, the capacitor life is displayed in Pr. 258 every time measurement is made. When the measured value falls to or below 85%, Pr. 255 bit 1 is turned on and also an alarm is output to the Y90 signal.

Measure the capacitor capacity according to the following procedure and check the deterioration level of the capacitor capacity.

① Check that the motor is connected and at a stop.

② Set "1" (measuring start) in Pr. 259.

③ Switch power off. The inverter applies DC voltage to the motor to measure the capacitor capacity while the inverter is off.

④ After confirming that the LED of the operation panel is off, power on again.

⑤ Check that "3" (measuring completion) is set in Pr. 259, read Pr 258, and check the deterioration degree of the main circuit capacitor.

Pr. 259	Description	Remarks
0	No measurement	Initial value
1	Measurement start	Measurement starts when the power supply is switched off.
2	During measurement	Only displayed and cannot be set
3	Measurement complete	
8	Forced end (see ❸, ❼, ❽, ❾ below)	
9	Measurement error (see ❹, ❺, ❻ below)	

Tab. 6-95: *Parameter 259*

When the main circuit capacitor life is measured under the following conditions, "forced end" (Pr. 259 = 8) or "measuring error" (Pr. 259 = 9) occurs or it remains in "measuring start" (Pr. 259 = 1). Therefore, do not measure in such case. In addition, even when "measurement completion" (Pr. 259 = 3) is confirmed under the following conditions, normal measurement can not be done.

❶ FR-HC or FR-CV is connected.

❷ DC power supply is connected to the terminal P/+ and N/–.

❸ The power supply switched on during measurement.

❹ The motor is not connected to the inverter.

❺ The motor is running. (The motor is coasting.)

❻ The motor capacity is two ranks (or more) smaller as compared to the inverter capacity.

❼ The inverter is at an alarm stop or an alarm occurred while power is off.

❽ The inverter output is shut off with the MRS signal.

❾ The start command is given while measuring.

❿ The parameter unit (FR-PU04/FR-PU07) is connected.

⓫ Use terminal PC as power supply.

⓬ I/O terminal of the control terminal block is on (continuity).

Turning the power on during measuring before LED of the operation panel turns off, it may remain in "measuring" (Pr. 259 = 2) status. In such case, carry out operation from step ②.

NOTE

For the accurate life measuring of the main circuit capacitor, perform after more than 3 hrs passed since the turn off of the power as it is affected by the capacitor temperature.

WARNING:

When measuring the main circuit capacitor capacity (Pr. 259 "Main circuit capacitor life measuring" = 1), the DC voltage is applied to the motor for 1s at powering off. Never touch the motor terminal, etc. right after powering off to prevent an electric shock.

Cooling fan life display

The cooling fan speed of 40% or less is detected and "FN" is displayed on the operation panel and parameter unit (FR-PU04/FR-PU07). As an alarm display, Pr. 255 bit 2 is turned on and also an alarm is output to the Y90 signal.

NOTE

When the inverter is mounted with two or more cooling fans, "FN" is displayed with one or more fans with speed of 50% or less.

6.20.3 Maintenance timer alarm (Pr. 503, Pr. 504)

When the cumulative energizing time of the inverter reaches the parameter set time, the maintenance timer output signal (Y95) is output. "MT" is displayed on the operation panel. This can be used as a guideline for the maintenance time of peripheral devices.

Pr. No.	Name	Initial Value	Setting Range	Description
503	Maintenance timer	0	0 (1–9998)	Display the cumulative energizing time of the inverter in 100h increments. Reading only Writing the setting of "0" clears the cumulative energizing tim, while Pr. 503 = "1 to 9998".
504	Maintenance timer alarm output set time	9999	0–9998	Set the time taken until when the maintenance timer alarm output signal (Y95) is output.
			9999	No function

Parameters referred to		Refer to Section
190/192/ 197	Output terminal function selection	6.9.5

The above parameters can be set when Pr. 160 = 0.

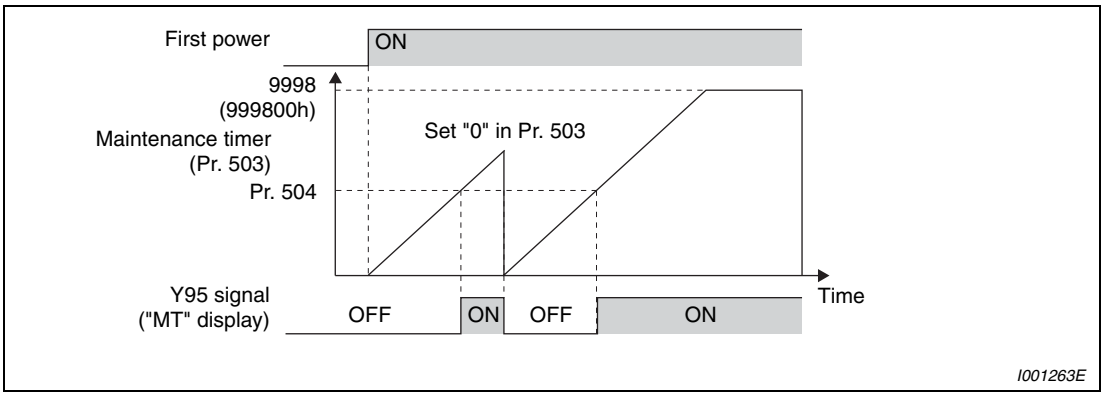

Fig. 6-141: *Maintenance timer*

The cumulative energizing time of the inverter is stored into the E²PROM every hour and indicated in Pr. 503 "Maintenance timer" in 100h increments. Pr. 503 is clamped at 9998 (999800h).

When the Pr. 503 value reaches the time set to Pr. 504 "Maintenance timer alarm output set time" (100h increments), the maintenance timer alarm output signal (Y95) is output.

For the terminal used for the Y95 signal output, assign the function by setting "95" (source logic) or "195" (sink logic) to any of Pr. 190, Pr. 192 or Pr. 197.

NOTES

The cumulative energizing time is counted every hour. The energizing time of less than 1h is not counted.

When terminal assignment is changed using Pr. 190, Pr. 192 or Pr. 197, the other functions may be affected. Please make setting after confirming the function of each terminal.

6.20.4 Current average value monitor signal (Pr. 555 to Pr. 557)

The average value of the output current during constant speed operation and the maintenance timer value are output as a pulse to the current average value monitor signal (Y93). The pulse width output to the I/O module of the PLC or the like can be used as a guideline due to abrasion of machines and elongation of belt and for aged deterioration of devices to know the maintenance time.

The current average value monitor signal (Y93) is output as pulse for 20s as 1 cycle and repeatedly output during constant speed operation.

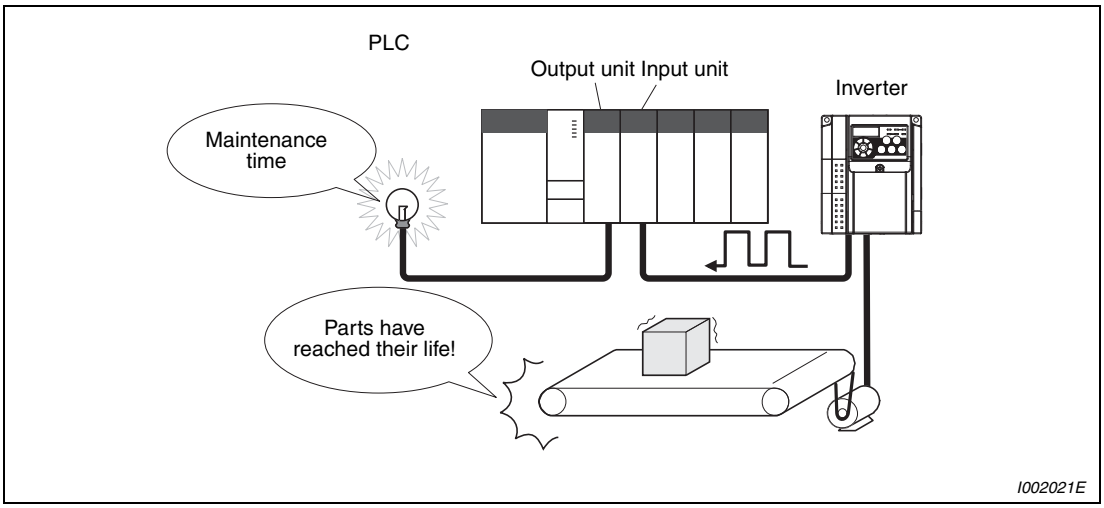

Fig. 6-142: *Monitoring the maintenance timer and current average value*

Pr. No.	Name	Initial Value	Setting Range	Description
555	Current average time	1s	0.1–1s	Set the time taken to average the current during start bit output (1s).
556	Data output mask time	0s	0–20s	Set the time for not obtaining (mask) transient state data.
557	Current average value monitor signal output reference current	Rated inverter current	0–500A	Set the reference (100%) for outputting the signal of the current average value.

Parameters referred to		Refer to Section
57	Restart coasting time	6.11.1
190/192/197	Output terminal function selection	6.9.5
503	Maintenance timer	6.20.3

The above parameters can be set when Pr. 160 = 0.

The above parameters allow its setting to be changed during operation in any operation mode even if "0" (initial value) is set in Pr. 77 "Parameter write selection".

The pulse output of the current average value monitor signal (Y93) is shown below.

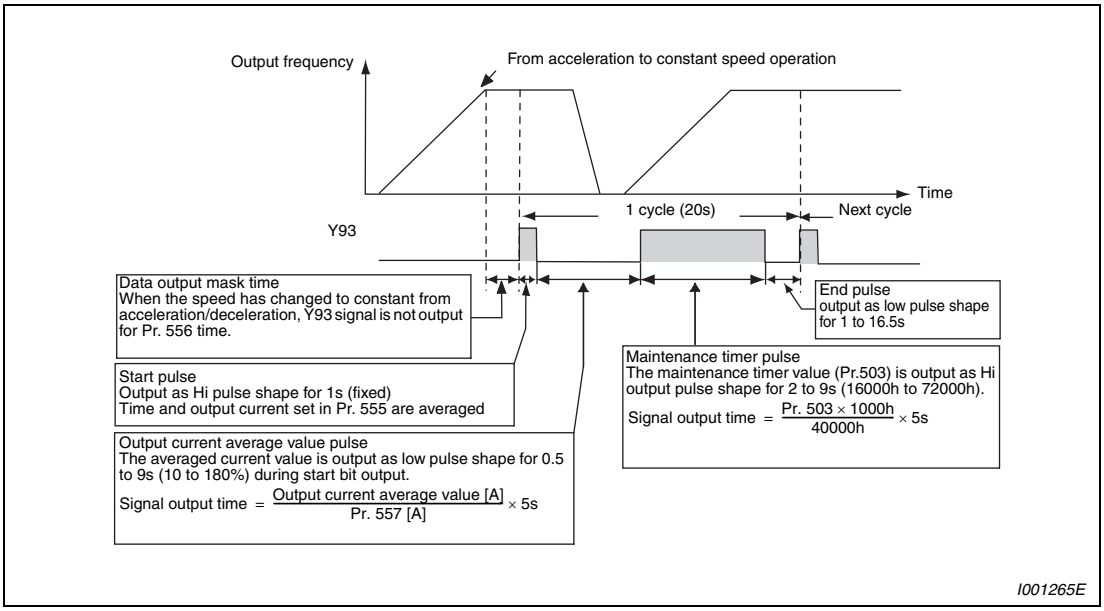

Fig. 6-143: *Output of the pulse signal Y93*

For the terminal used for the Y93 signal output, assign the function by setting "93" (positive logic) or "193" (negative logic) to Pr. 190 or Pr. 197. The function can not be assigned to Pr. 192 "ABC terminal function selection".

The output current is unstable (transient state) right after the operation is changed from the acceleration/deceleration state to the constant speed operation. Set the time for not obtaining (mask) transient state data in Pr. 556.

Setting of the Pr. 555 "Current average time"
The average output current is calculated during Hi output of start bit (1s). Set the time taken to average the current during start bit output in Pr. 555.

Setting of Pr. 557 "Current average value monitor signal output reference current"
Set the reference (100%) for outputting the signal of the current average value. Obtain the time of the low pulse after a fixed start pulse of 1s from the following calculation.

$$\frac{\text{Output current average value}}{\text{Pr. 557}} \times 5\text{s (output current average value 100\%/5s)}$$

Note that the output time range is 0.5 to 9s, and it is 0.5s when the output current average value is less than 10% of the setting value of Pr. 557 and 9s when it exceeds 180%.

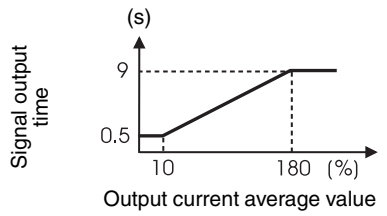

Fig. 6-144:
Signal output time for the current average value

I001266E

Example ▽ When Pr. 557 = 10A and the average value of output current is 15A, the current average value monitor signal is output as low pulse shape for 7.5s.

$$\text{Signal output time} = \frac{15\text{A}}{10\text{A}} \times 5\text{s} = 7.5\text{s}$$

△

Output of Pr. 503 "Maintenance timer"
After the output current average value is output as low pulse shape, the maintenance timer value is output as high pulse shape. The output time of the maintenance timer value is obtained from the following calculation.

$$\frac{\text{Pr. 503} \times 100}{40000\text{h}} \times 5\text{s (Maintenance timer value 100\%/5s)}$$

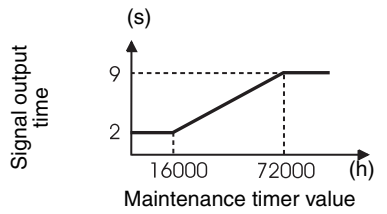

Fig. 6-145:
Signal output time for the maintenance output value

I001267E

Note that the output time range is 2 to 9s, and it is 2s when Pr. 503 is less than16000h and 9s when it exceeds 72000h.

NOTES

Mask of data output and sampling of output current are not performed during acceleration/deceleration.

When the speed is changed to acceleration/deceleration from constant speed during start bit output, the data is judged as invalid, the start bit is output as high pulse shape for 3.5s, and the end signal is output as low pulse shape for 16.5s. The signal is output for at least 1 cycle even when acceleration/deceleration state continues after the start bit output is completed.

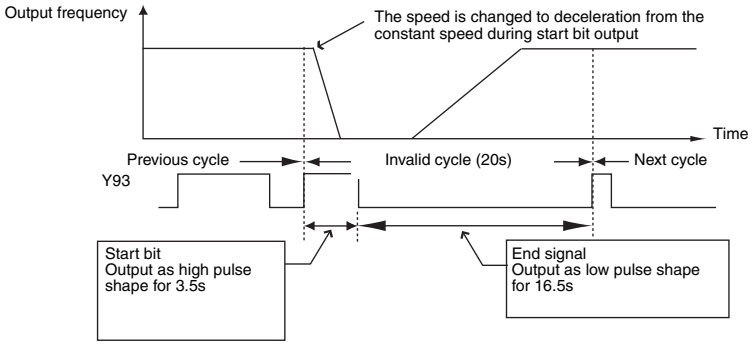

When the output current value (inverter output current monitor) is 0A on completion of the 1 cycle signal output, the signal is not output until the speed becomes constant next time.

The current average value monitor signal (Y93) is output as low pulse shape for 20s (without data output) under the following condition:

- When the motor is in the acceleration/deceleration state on completion of the 1 cycle signal output.
- When 1-cycle signal output was ended during restart operation with the setting of automatic restart after instantaneous power failure (Pr. 57 ≠ 9999).
- When automatic restart operation was being performed with automatic restart after instantaneous power failure selected (Pr. 57 ≠ 9999) on completion of the data output mask.

When terminal assignment is changed using Pr. 190, Pr. 192 or Pr. 197, the other functions may be affected. Please make setting after confirming the function of each terminal.

6.20.5 Free parameters (Pr. 888, Pr. 889)

Parameters you can use for your own purposes.
You can input any number within the setting range "0" to "9999".

For example, the number can be used:

- As a unit number when multiple units are used.
- As a pattern number for each operation application when multiple units are used.
- As the year and month of introduction or inspection.

Pr. No.	Name	Initial Value	Setting Range	Description
888	Free parameter 1	9999	0–9999	Any values can be set. Data is held evenif the inverter power is turned off.
889	Free parameter 2	9999	0–9999	

Parameters referred to	Refer to Section
—	

The above parameters can be set when Pr. 160 = 0.

The above parameters allow its setting to be changed during operation in any operation mode even if "0" (initial value) is set in Pr. 77 "Parameter write selection".

NOTE Pr. 888 and Pr. 889 do not influence the inverter operation.

6.21 Setting for the parameter unit and operation panel

Purpose	Parameters that must be set		Refer to Section
Selection of rotation direction by the RUN key of the operation panel	RUN key rotation direction selection	Pr. 40	6.21.1
Switch the display language of the parameter unit	PU display language selection	Pr. 145	6.21.2
Use the setting dial of the operation panel like a volume for frequency setting. Key lock of operation panel	Operation panel operation selection	Pr. 161	6.21.3
Change the magnitude of change of frequency setting by the setting dial of the operation panel	Magnitude of frequency change setting	Pr. 295	6.21.4
Control of the parameter unit buzzer	PU buzzer control	Pr. 990	6.21.5
Adjust LCD contrast of the parameter unit	PU contrast adjustment	Pr. 991	6.21.6

6.21.1 RUN key rotation direction selection (Pr. 40)

Used to choose the direction of rotation by operating the RUN key of the operation panel.

Pr. No.	Name	Initial Value	Setting Range	Description
40	RUN key rotation direction selection	0	0	Forward rotation
			1	Reverse rotation

Parameters referred to	Refer to Section
—	

The above parameter can be set when Pr. 160 = 0.

6.21.2 PU display language selection (Pr. 145)

By using parameter 145 you can select the display language for the parameter unit FR-PU04/FR-PU07.

Pr. No.	Name	Initial Value	Setting Value	Description
145	PU display language selection	1	0	Japanese
			1	English
			2	German
			3	French
			4	Spanish
			5	Italian
			6	Swedish
			7	Finnish

Parameters referred to	Refer to Section
—	

The above parameter can be set when Pr. 160 = 0.

6.21.3 Operation panel frequency setting/key lock operation selection (Pr. 161)

The digital dial of the operation panel can be used like a potentiometer to perform operation.

The key operation of the operation panel can be disabled.

Pr. No.	Name	Initial Value	Setting Range	Description	
161	Frequency setting/ key lock operation selection	0	0	Setting dial frequency setting mode	Key lock mode invalid
			1	Setting dial potentiometer mode	
			10	Setting dial frequency setting mode	Key lock mode valid These setting must be confirmed by pressing the MODE key for about 2 s.
			11	Setting dial potentiometer mode	

Parameters referred to	Refer to Section
—	

The above parameter can be set when Pr. 160 = 0.

NOTES

You can find a detailed description of the operation panel with examples in section 4.3 "Operation Panel".

When the setting dial and key operation is made invalid, "HOLD" appears on the operation panel while pressing a key.

The STOP/RESET key is valid even in the operation lock status.

6.21.4 Magnitude of frequency change setting (Pr. 295)

When setting the set frequency with the digital dial, frequency changes in 0.01Hz increments in the initial status. Setting this parameter increases the magnitude of frequency which changes according to the rotated amount of the digital dial, improving operability.

Pr. No.	Name	Initial Value	Setting Range	Description
295	Magnitude of frequency change setting	0	0	Function invalid
			0.01	The minimum varying width when the set frequency is changed by the setting dial can be set.
			0.1	
			1	
			10	

Parameters referred to	Refer to Section
—	

The above parameter can be set when Pr. 160 = 0.

The above parameter allows its setting to be changed during operation in any operation mode even if "0" (initial value) is set in Pr. 77 "Parameter write selection".

Example ▽ When "1.00Hz" is set in Pr. 295, one click (one dial gauge) of the setting dial changes the frequency inincrements of 1.00Hz -> 2.00Hz -> 3.00Hz.

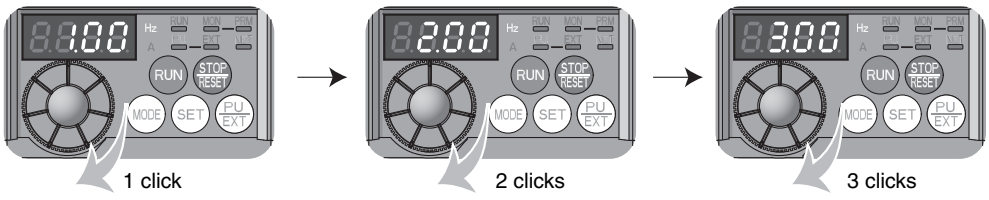

One rotation of the setting dial equals to 24 clicks (24 dial gauses).

I001844E

Fig. 6-146: *Magnitude when parameter 295 is set to "1.00"*

△

NOTES

When machine speed display is selected with Pr. 37, the minimum increments of the magnitude of change is determined by Pr.295 as well. Note that the setting value may differ as speed setting changes the set machine speed and converts it to the speed dislay again.

When the set frequency (speed) is 100 or more, frequency is displayed in 0.1 increments. Therefore, the minimum varying width is 0.1 even when Pr. 295 < 0.1.

When the machine speed setting is 1000 or more, frequency is displayed in 1 increments. Therefore, the minimum varying width is 1 even when Pr. 295 < 1.

For Pr. 295, unit is not displayed.

This parameter is valid only in the set frequency mode. When other frequency-related parameters are set, it is not activated.

When 10 is set, frequency setting changes in 10Hz increments. Note the excess speed (in potentiometer mode).

6.21.5 Buzzer control (Pr. 990)

You can make the buzzer "beep" when you press the key of the parameter unit (FR-PU04/FR-PU07).

Pr. No.	Name	Initial Value	Setting Range	Description	Parameters referred to	Refer to Section
990	PU buzzer control	1	0	Without buzzer	—	
			1	With buzzer		

The above parameter can be set when Pr. 160 = 0.

The above parameter allows its setting to be changed during operation in any operation mode even if "0" (initial value) is set in Pr. 77 "Parameter write selection".

NOTE Inverter alert faults with beep sounds when this parameter is set to activate the buzzer.

6.21.6 PU contrast adjustment (Pr. 991)

Contrast adjustment of the LCD of the parameter unit (FR-PU04/FR-PU07) can be performed. Decreasing the setting value makes contrast light. You should press the WRITE key to store the PU contrast setting.

Pr. No.	Name	Initial Value	Setting Range	Description	Parameters referred to	Refer to Section
991	PU contrast adjustment	58	0–63	0: Light ↓ 63: Dark	—	

The above parameter is displayed as simple mode parameter only when the parameter unit FR-PU04/FR-PU07 is connected.

The above parameter allows its setting to be changed during operation in any operation mode even if "0" (initial value) is set in Pr. 77 "Parameter write selection".

7 Troubleshooting

Frequency inverter FR-D700 SC EC has a multitude of protective functions which protect the drive and the inverter from damage in case of a fault. When an alarm occurs in the inverter, the protective function is activated bringing the inverter to an alarm stop and the PU display automatically changes to any of the following error (alarm) indications. If the fault does not correspond to any of the following errors or if you have any other problem, please contact your sales representative.

- Retention of fault output signal . . . . . When the magnetic contactor (MC) provided on the input side of the inverter is opened at the activation of the protective function, the inverter's control power will be lost and the alarm output will not be held.
- Fault or alarm display . . . . . When the protective function is activated, the operation panel display automatically switches to the above indication.
- Resetting method . . . . . When a protective function of the inverter is activated, the power output of the inverter is blocked (motor is coasting). The inverter cannot start up again unless an automatic restart has been configured or the inverter is reset. Please observe carefully the warnings contained below in the configuration of an automatic restart or the execution of a reset.
- If protective functions were activated (i. e. the inverter switched off with an error message) follow the instructions for error correction provided in the manual for the inverter. Especially in the case of short circuits or earth contacts in the inverter output and mains over voltages the cause of the fault must be determined prior to switching on again as a recurrence of such faults at short intervals can lead to premature aging of components or even the complete breakdown of the device. After the cause of the fault has been found and corrected the inverter can be reset and operations continue.

NOTE Past eight faults can be displayed using the setting dial.

7.1 List of alarm display

Operation Panel Indication			Name	Refer to Page
Error message	E---	E---	Faults history	7-19
	HOLd	HOLD	Operation panel lock	7-4
	LOCd	LOCD	Password locked	7-4
	Er1 to Er4	Er1 to Er4	Parameter write error	7-4
	Err.	Err.	Inverter reset	7-5
Warnings	OL	OL	Stall prevention (overcurrent)	7-6
	oL	oL	Stall prevention (overvoltage)	7-6
	rb	RB	Regenerative brake prealarm	7-7
	TH	TH	Electronic thermal relay function prealarm	7-7
	PS	PS	PU Stop	7-7
	MT	MT	Maintenance signal output	7-7
	UV	UV	Undervoltage	7-8
	SA	SA	Safety stop	7-8
Alarm	Fn	FN	Fan fault	7-8
Fault	E.OC1	E.OC1	Overcurrent shut-off during acceleration	7-9
	E.OC2	E.OC2	Overcurrent shut-off during constant speed	7-9
	E.OC3	E.OC3	Overcurrent shut-off during deceleration or stop	7-10
	E.OV1	E.OV1	Regenerative over voltage shut-off during acceleration	7-10
	E.OV2	E.OV2	Overcurrent shut-off during constant speed	7-10
	E.OV3	E.OV3	Regenerative over voltage shut-off during deceleration or stop	7-11
	E.THT	E.THT	Inverter overload shut-off (electronic thermal relay function)	7-11
	E.THM	E.THM	Motor overload shut-off (electronic thermal relay function)	7-11
	E.FIN	E.FIN	Fin overheat	7-12
	E.ILF	E.ILF ①	Input phase loss	7-12
	E.OLT	E.OLT	Stall prevention	7-12
	E.BE	E.BE	Brake transistor alarm detection	7-13
	E.GF	E.GF	Output side earth (ground) fault overcurrent protection	7-13

Tab. 7-1: *List of alarm display (1)*

Operation Panel Indication			Name	Refer to Page
Fault	E. LF	E.LF	Output phase loss	7-13
	E.OHT	E.OHT	External thermal relay operation	7-13
	E.PTC	E.PTC ①	PTC thermistor operation	7-14
	E. PE	E.PE	Parameter storage device fault	7-14
	E.PUE	E.PUE	PU disconnection	7-14
	E.rET	E.RET	Retry count excess	7-15
	E. 5	E. 5	CPU fault	7-15
	E.CPU	E.CPU		
	E.CdO	E.CDO ①	Output current detection value exceeded	7-15
	E.IOH	E.IOH ①	Inrush current limit circuit fault	7-15
	E.AIE	E.AIE ①	Analog input fault	7-16
	E.SAF	E.SAF ①	Safety circuit fault	7-16

Tab. 7-1: *List of alarm display (2)*

① If protective functions of "E.ILF, E.PTC, E.CDO, E.IOH, E.AIE or E.SAF" are activated when using the FR-PU04, "Fault 14" is displayed.

7.2 Causes and corrective actions

Error Message

A message regarding operational troubles is displayed. Output is not shutoff.

Operation Panel Indication	**HOLD**	HOLd
Name	Operation panel lock	
Description	Operation lock mode is set. Operation other than STOP/RESET is made invalid. (Refer to section 4.3.4.)	
Check point	—	
Corrective action	Press the MODE key for 2s to release lock.	

Operation Panel Indication	**LOCD**	LOCd
Name	Password locked	
Description	Password function is active. Display and setting of parameter is restricted.	
Check point	—	
Corrective action	Enter the password in Pr. 297 to unlock the password function before operating. (Refer to section 6.16.5.)	

Operation Panel Indication	**Er1**	Er 1
Name	Write disable error	
Description	• You attempted to make parameter setting when Pr. 77 "Parameter write selection" has been set to disable parameter write. • Frequency jump setting range overlapped. • The PU and inverter cannot make normal communication.	
Check point	• Check the setting of Pr. 77 "Parameter write selection". (Refer to section 6.16.2.) • Check the settings of Pr. 31 to 36 (frequency jump). (Refer to section. 6.3.2.) • Check the connection of the PU and inverter.	

Operation Panel Indication	**Er2**	Er2
Name	Write error during operation	
Description	When parameter write was performed during operation with a value other than "2" (writing is enabled independently of operation status in any operation mode) is set in Pr. 77 and the STF (STR) is on.	
Check point	• Check the Pr. 77 setting. (Refer to section 6.16.2.) • Check that the inverter is not operating.	
Corrective action	• Set "2" in Pr. 77. • After stopping operation, make parameter setting.	

Operation Panel Indication	**Er3**	Er3
Name	Calibration error	
Description	Analog input bias and gain calibration values are too close.	
Corrective action	Check the settings of C3, C4, C6 and C7 (calibration functions). (Refer to section 6.15.3.)	

Operation Panel Indication	**Er4**	Er4
Name	Mode designation error	
Description	• You attempted to make parameter setting in the External or NET operation mode when Pr. 77 is not "2". • You attempted to make parameter setting when the command source is not at the operation panel.	
Check point	• Check that operation mode is "PU operation mode". • Check the Pr. 77 setting. (Refer to section 6.16.2.) • Check if a parameter unit (FR-PU04/FR-PU07) is connected when Pr. 551 = "9999“ (initial setting). • Check the Pr. 551 setting.	
Corrective action	• After setting the operation mode to the "PU operation mode", make parameter setting. (Refer to section 6.16.2.) • After setting "2" in Pr. 72, make parameter setting. • Disconnect the parameter unit (FR-PU04/FR-PU07), and make parameter setting. • After setting Pr. 551 = "4", make parameter setting.	

Operation Panel Indication	**Err.**	Err.
Name	Inverter reset	
Description	• Executing reset using RES signal, or reset command from communication or PU. • Displays at powering off.	
Corrective action	• Turn off the RES signal.	

Warnings

When the protective function is activated, the output is not shut off.

Operation Panel Indication	**OL**	OL	**FR-PU04** **FR-PU07**	**OL**
Name	Stall prevention (overcurrent)			
Description	During acceleration	When the output current of the inverter exceeds the stall prevention operation level (Pr. 22 "Stall prevention operation level", etc.), this function stops the increase in frequency until the overload current decreases to prevent the inverter from resulting in overcurrent trip. When the overload current has reduced below stall prevention operation level, this function increases the frequency again.		
	During constant-speed operation	When the output current of the inverter exceeds the stall prevention operation level (Pr. 22 "Stall prevention operation level", etc.), this function reduces frequency until the overload current decreases to prevent the inverter from resulting in overcurrent trip. When the overload current has reduced below stall prevention operation level, this function increases the frequency up to the set value.		
	During deceleration	When the output current of the inverter exceeds the stall prevention operation level (Pr. 22 "Stall prevention operation level", etc.), this function stops the decrease in frequency until the overload current decreases to prevent the inverter from resulting in overcurrent trip. When the overload current has decreased below stall prevention operation level, this function decreases the frequency again.		
Check point	• Check that the Pr. 0 "Torque boost" setting is not too large. • Check that the Pr. 7 "Acceleration time" and Pr. 8 "Deceleration time" settings are not too small. • Check that the load is not too heavy. • Are there any failure in peripheral devices? • Check that the Pr. 13 "Starting frequency" is not too large. • Check that the Pr. 22 "Stall prevention operation level" is appropriate.			
Corrective action	• Increase or decrease the Pr. 0 "Torque boost setting" 1% by 1% and check the motor status. (Refer to section 6.2.1.) • Set a larger value in Pr. 7 "Acceleration time" and Pr. 8 "Deceleration time". (Refer to section 6.6.1.) • Reduce the load weight. • Try advanced magnetic flux vector control and general-purpose magnetic flux vector control. • Change the Pr. 14 "Load pattern selection" setting. • Set stall prevention operation current in Pr. 22 "Stall prevention operation level". (The initial value is 150%.) The acceleration/deceleration time may change. Increase the stall prevention operation level with Pr. 22 "Stall prevention operation level", or disable stall prevention with Pr. 156 "Stall prevention operation selection". (Operation at OL occurrence can be selected using Pr. 156.)			

Operation Panel Indication	**oL**	oL	**FR-PU04** **FR-PU07**	**oL**
Name	Stall prevention (overvoltage)			
Description	During deceleration	• If the regenerative energy of the motor becomes excessive and exceeds the regenerative energy consumption capability, this function stops the decrease in frequency to prevent over voltage shut-off. As soon as the regenerative energy has decreased, deceleration resumes. • If the regenerative energy of the motor becomes excessive when regeneration avoidance function is selected (Pr. 882 = 1), this function increases the speed to prevent over voltage shut-off. (Refer to section 6.19.4).		
Check point	• Check for sudden speed reduction. • Check that regeneration avoidance function (Pr. 882, Pr. 883, Pr. 885, Pr. 886) is used. (Refer to section 6.19.4.)			
Corrective action	The deceleration time may change. Increase the deceleration time using Pr. 8 "Deceleration time".			

Operation Panel Indication	**PS**	PS	**FR-PU04** **FR-PU07**	**PS**
Name	PU Stop			
Description	Stop with the STOP/RESET key of the PU is set in Pr. 75 "Reset selection/disconnected PU detection/PU stop selection". (For Pr. 75, refer to section 6.16.1.)			
Check point	Check for a stop made by pressing the STOP/RESET key of the operation panel.			
Corrective action	Turn the start signal off and release with PU/EXT key.			

Operation Panel Indication	**RB**	rb	**FR-PU04** **FR-PU07**	**RB**
Name	Regenerative brake prealarm			
Description	Appears if the regenerative brake duty reaches or exceeds 85% of the Pr. 70 "Special regenerative brake duty" value. When the setting of Pr. 70 "Special regenerative brake duty" is the initial value (Pr. 70 = 0), this warning does not occur. If the regenerative brake duty reaches 100%, a regenerative overvoltage (E. OV□) occurs. The RBP signal can be simultaneously output with the [RB] display. For the terminal used for the RBP signal output, assign the function by setting "7 (positive logic) or 107 (negative logic)" in any of Pr. 190, Pr. 192 or Pr. 197 "Output terminal function selection". (Refer to section 6.9.5.)			
Check point	• Check that the brake resistor duty is not high. • Check that the Pr. 30 "Regenerative function selection" and Pr. 70 "Special regenerative brake duty" values are correct.			
Corrective action	• Increase the deceleration time (Pr. 8). • Check the Pr. 30 "Regenerative function selection" and Pr. 70 "Special regenerative brake duty" values.			

Operation Panel Indication	**TH**	TH	**FR-PU04** **FR-PU07**	**TH**
Name	Electronic thermal relay function prealarm			
Description	Appears if the cumulative value of the Pr. 9 "Electronic thermal O/L relay" reaches or exceeds 85% of the preset level. If it reaches 100% of the Pr. 9 "Electronic thermal O/L relay" setting, a motor overload trip (E. THM) occurs. The THP signal can be simultaneously output with the [TH] display. For the terminal used for THP signal output, assign the function by setting "8 (positive logic) or 108 (negative logic)" in any of Pr. 190, Pr. 192 or Pr. 197 "Output terminal function selection"). (Refer to section 6.9.5.)			
Check point	• Check for large load or sudden acceleration. • Is the Pr. 9 "Electronic thermal O/L relay" setting is appropriate? (Refer to section 6.7.1.)			
Corrective action	• Reduce the load weight or the number of operation times. • Set an appropriate value in Pr. 9 "Electronic thermal O/L relay". (Refer to section 6.7.1.)			

Operation Panel Indication	**MT**	MT	**FR-PU04** **FR-PU07**	—
Name	Maintenance signal output			
Description	Indicates that the cumulative energization time of the inverter has reached a given time. When the setting of Pr. 504 "Maintenance timer alarm output" set time is the initial value (Pr. 504 = 9999), this warning does not occur.			
Check point	The Pr. 503 "Maintenance timer" setting is larger than the Pr. 504 "Maintenance timer alarm output set time" setting. (Refer to section 6.20.3.)			
Corrective action	Setting "0" in Pr. 503 "Maintenance timer" erases the signal.			

Operation Panel Indication	**UV**	Uv	**FR-PU04** **FR-PU07**	—
Name	Undervoltage			
Description	If the power supply voltage of the inverter decreases, the control circuit will not perform normal functions. In addition, the motor torque will be insufficient and/or heat generation will increase. To prevent this, if the power supply voltage decreases below about 230VAC, this function stops the inverter output and displays. An alarm is reset when the voltage returns to normal.			
Check point	Check that the power supply voltage is normal.			
Corrective action	Check that the power supply voltage is normal.			

Operation Panel Indication	**SA**	SA	**FR-PU04** **FR-PU07**	—
Name	Safety stop			
Description	Appears when safety stop function is activated (during output shutoff).			
Check point	Check if the shorting wire between S1 and SC or between S2 and SC is disconnected when not using the safety stop function.			
Corrective action	• When not using the safety stop function, short across terminals S1 and SC and across S2 and SC with shorting wire for the inverter to run. • If SA is indicated when across S1 and SC and across S2 and SC are both shorted while using the safety stop function (drive enabled), internal failure might be the cause. • Check the wiring of terminals S1, S2 and SC and contact your sales representative if the wiring has no fault.			

Alarm

When an alarm occurs, the output is not shut off. You can also output an alarm signal by making parameter setting. (Set "98" in any of Pr. 190, Pr. 192 or Pr. 197 "Output terminal function selection". Refer to section 6.9.5).

Operation Panel Indication	**FN**	Fn	**FR-PU04** **FR-PU07**	**FN**
Name	Fan fault			
Description	For the inverter that contains a cooling fan, "FN" appears on the operation panel when the cooling fan stops due to an alarm or different operation from the setting of Pr. 244 "Cooling fan operation selection".			
Check point	Check the cooling fan for an alarm.			
Corrective action	Replace the cooling fan.			

Fault

When a fault occurs, the inverter trips and a fault signal is output.

Operation Panel Indication	**E.OC1**	E.OC 1	**FR-PU04** **FR-PU07**	**OC During Acc**
Name	Overcurrent shut-off during acceleration			
Description	When the inverter output current reaches or exceeds approximately 200% of the rated current during acceleration, the protective circuit is activated and the inverter trips.			
Check point	• Check for sudden acceleration. • Check that the downward acceleration time is not long in vertical lift application. • Check for output short circuit/ground fault. • Check if the stall prevention operation level is set too high. Check if the fast-response current limit operation is disabled. • Check that regeneration is not performed frequently. (Check that the output voltage becomes larger than the V/f reference value at regeneration and overcurrent occurs due to the high voltage.)			
Corrective action	• Increase the acceleration time. (Shorten the downward acceleration time in vertical lift application.) • When "E.OC1" is always lit at starting, disconnect the motor once and start the inverter. If "E.OC1" is still lit, contact your sales representative. • Check the wiring to make sure that output short circuit/ground fault does not occur. • Lower the setting of stall prevention operation level. Activate the fast-response current limit operation. (Refer to section 6.2.4). • Set base voltage (rated voltage of the motor, etc.) in Pr. 19 "Base frequency voltage". (Refer to section 6.4.1.)			

Operation Panel Indication	**E.OC2**	E.OC 2	**FR-PU04** **FR-PU07**	**OC During Dec**
Name	Overcurrent shut-off during constant speed			
Description	When the inverter output current reaches or exceeds approximately 200% of the rated current during constant speed operation, the protective circuit is activated and the inverter trips.			
Check point	• Check for sudden load change. • Check for output short circuit/ground fault. • Check if the stall prevention operation level is set too high. Check if the fast-response current limit operation is disabled.			
Corrective action	• Keep load stable. • Check the wiring to make sure that output short circuit/ground fault does not occur. • Lower the setting of stall prevention operation level. Activate the fast-response current limit operation. (Refer to section 6.2.4).			

Operation Panel Indication	**E.OC3**	E.OC3	**FR-PU04** **FR-PU07**	**OC During Dec**
Name	Overcurrent shut-off during deceleration or stop			
Description	When the inverter output current reaches or exceeds approximately 200% of the rated inverter current during deceleration (other than acceleration or constant speed), the protective circuit is activated and the inverter trips.			
Check point	• Check for sudden speed reduction. • Check for output short circuit/ground fault. • Check for too fast operation of the motor's mechanical brake. • Check if the stall prevention operation level is set too high. • Check if the fast-response current limit operation is disabled.			
Corrective action	• Increase the deceleration time. • Check the wiring to make sure that output short circuit/ground fault does not occur. • Check the mechanical brake operation. • Lower the setting of stall prevention operation level. Activate the fast-response current limit operation. (Refer to section 6.2.4).			

Operation Panel Indication	**E.OV1**	E.OV1	**FR-PU04** **FR-PU07**	**OV During Acc**
Name	Regenerative overvoltage shut-off during acceleration			
Description	If regenerative energy causes the inverter's internal main circuit DC voltage to reach or exceed the specified value, the protective circuit is activated and the inverter trips. The circuit may also be activated by a surge voltage produced in the power supply system.			
Check point	• Check for too slow acceleration (e.g. during downward acceleration in vertical lift load). • Check that the Pr. 22 "Stall prevention operation level" is not too low.			
Corrective action	• Decrease the acceleration time. • Check that regeneration avoidance function (Pr. 882, Pr. 883, Pr. 885, Pr. 886) is used. (Refer to section 6.19.4) • Set a correct value in Pr. 22 "Stall prevention operation level".			

Operation Panel Indication	**E.OV2**	E.OV2	**FR-PU04** **FR-PU07**	**U>>N = konst**
Name	Regenerative overvoltage shut-off during constant speed			
Description	If regenerative energy causes the inverter's internal main circuit DC voltage to reach or exceed the specified value, the protective circuit is activated to stop the inverter output. The circuit may also be activated by a surge voltage produced in the power supply system.			
Check point	• Check for sudden load change. • Check that the Pr. 22 "Stall prevention operation level" is not too low.			
Corrective action	• Keep load stable. • Check that regeneration avoidance function (Pr. 882, Pr. 883, Pr. 885, Pr. 886) is used. (Refer to section 6.19.4) • Use the brake resistor, brake unit or power regeneration common converter (FR-CV) as required. • Set a correct value in Pr. 22 "Stall prevention operation level".			

Operation Panel Indication	E.OV3	E.Ov3	FR-PU04 FR-PU07	OV During Dec
Name	Regenerative overvoltage shut-off during deceleration or stop			
Description	If regenerative energy causes the inverter's internal main circuit DC voltage to reach or exceed the specified value, the protective circuit is activated to stop the inverter output. The circuit may also be activated by a surge voltage produced in the power supply system.			
Check point	Check for sudden speed reduction.			
Corrective action	• Increase the deceleration time. (Set the deceleration time which matches the inertia moment of the load) • Use regeneration avoidance function (Pr. 882, Pr. 883, Pr. 885, Pr. 886). (Refer to section 6.19.4.) • Use the brake unit or power regeneration common converter (FR-CV) as required.			

Operation Panel Indication	E.THT	E.THT	FR-PU04 FR-PU07	Inv. Overload
Name	Inverter overload shut-off (electronic thermal relay function) ①			
Description	If the temperature of the output transistor element exceeds the protection level under the condition that a current not less than the rated inverter current flows and overcurrent trip does not occur (200% or less), the electronic thermal relay activates to stop the inverter output. (Overload capacity 150% for 60s, 200% for 0.5s)			
Check point	• Check that acceleration/deceleration time is not too short. • Check that torque boost setting is not too large (small). • Check that load pattern selection setting is appropriate for the load pattern of the using machine. • Check the motor for use under overload. • Check for too high ambient temperature.			
Corrective action	• Increase acceleration/deceleration time. • Adjust the torque boost setting. • Set the load pattern selection setting according to the load pattern of the using machine. • Reduce the load weight. • Set the ambient temperature to within the specifications.			

① Resetting the inverter initializes the internal thermal integrated data of the electronic thermal relay function.

Operation Panel Indication	E.THM	E.THM	FR-PU04 FR-PU07	Motor Overload
Name	Motor overload shut-off (electronic thermal relay function) ①			
Description	The electronic thermal relay function in the inverter detects motor overheat due to overload or reduced cooling capability during constant-speed operation and pre-alarm (TH display) is output when the I^2t value reaches 85% of the Pr. 9 "Electronic thermal O/L relay" setting and the protection circuit is activated to stop the inverter output when the I^2t value reaches the specified value. When running a special motor such as a multi-pole motor or multiple motors, provide a thermal relay on the inverter output side since such motor(s) cannot be protected by the electronic thermal relay function.			
Check point	• Check the motor for use under overload. • Check that the setting of Pr. 71 "Applied motor" for motor selection is correct. (Refer to section .) • Check that the setting of Pr. 71 "Applied motor" for motor selection is correct. (Refer to section 6.2.4.)			
Corrective action	• Reduce the load weight. • For a constant-torque motor, set the constant-torque motor in Pr. 71 "Applied motor". • Check that stall prevention operation setting is correct. (Refer to section 6.2.4.)			

① Resetting the inverter initializes the internal thermal integrated data of the electronic thermal relay function.

Operation Panel Indication	E.FIN	E.FIn	FR-PU04 FR-PU07	H/Sink O/Temp
Name	Fin overheat			
Description	If the heatsink overheats, the temperature sensor is actuated to stop the inverter output. The FIN signal can be output when the temperature becomes approximately 85% of the heatsink overheat protection operation temperature. For the terminal used for the FIN signal output, assign the function by setting "26" (source logic) or "126" (sink logic) in any of Pr. 190, Pr. 192 or Pr. 197 "Output terminal function selection". (Refer to section 6.9.5).			
Check point	• Check for too high ambient temperature. • Check for heatsink clogging. • Check that the cooling fan is stopped. (Check that "FN" is not displayed on the operation panel.)			
Corrective action	• Set the ambient temperature to within the specifications. • Clean the heatsink. • Replace the cooling fan.			

Operation Panel Indication	E.ILF	E.ILF	FR-PU04	Fault 14
			FR-PU07	Input phase loss
Name	Input phase loss ①			
Description	Inverter trips when function valid setting (=1) is selected in Pr. 872 Input phase loss protection selection and one phase of the three phase power input is lost. (Refer to section 6.12.2). It may function if phase-to-phase voltage of the three-phase power input becomes largely unbalanced.			
Check point	• Check for a brake in the cable for the three-phase power supply input. • Check that phase-to-phase voltage of the three-phase power input is not largely unbalanced.			
Corrective action	• Wire the cables properly. • Repair a brake portion in the cable. • Check the Pr. 872 "Input phase failure protection selection" setting. • Set Pr. 872 = "0" (without input phase loss protection) when three-phase input voltage is largely unbalanced.			

① Available only for three-phase power input specification model.

Operation Panel Indication	E.OLT	E.OLT	FR-PU04 FR-PU07	Stall Prev STP (OL shown during stall prevention operation)
Name	Stall prevention			
Description	If the output frequency has fallen to 1Hz by stall prevention operation and remains for 3s, a fault (E.OLT) appears and trips the inverter. "OL" appears while stall prevention is being activated. E.OLT may not occur if stall prevention (OL) is activated during output phase loss.			
Check point	Check the motor for use under overload. (Refer to section 6.2.4).			
Corrective action	• Reduce the load weight. • Check the Pr. 22 "Stall prevention operation level" setting.			

Operation Panel Indication	**E.BE**	E. bE	**FR-PU04** **FR-PU07**	**Br. Cct. Fault**
Name	Brake transistor alarm detection/internal circuit error			
Description	When a brake transistor alarm has occurred due to the large regenerative energy from the motor etc., the brake transistor alarm is detected and the inverter trips. **In this case, the inverter must be powered off immediately.**			
Check point	• Reduce the load inertia. • Check that the frequency of using the brake is proper. • Check that the brake resistor selected is correct.			
Corrective action	Replace the inverter.			

Operation Panel Indication	**E.GF**	E. GF	**FR-PU04** **FR-PU07**	**Ground Fault**
Name	Output side earth (ground) fault overcurrent protection			
Description	The inverter trips if an earth (ground) fault overcurrent flows at start due to an earth (ground) fault that occurred on the inverter's output side (load side). Whether this protective function is used or not is set with Pr. 249 "Earth (ground) fault detection at start".			
Check point	Check for an earth fault in the motor and connection cable.			
Corrective action	Remedy the earth fault portion.			

Operation Panel Indication	**E.LF**	E. LF	**FR-PU04** **FR-PU07**	**E.LF**
Name	Output phase loss			
Description	If one of the three phases (U, V, W) on the inverter's output side (load side) is lost during inverter operation (except during DC injection brake operation and when output frequency is under 1Hz), inverter stops the output. Whether the protective function is used or not is set with Pr. 251 "Output phase loss protection selection".			
Check point	• Check the wiring (Check that the motor is normal.) • Check that the capacity of the motor used is not smaller than that of the inverter.			
Corrective action	• Wire the cables properly. • Check the Pr. 251 "Output phase failure protection selection" setting.			

Operation Panel Indication	**E.OHT**	E.OHT	**FR-PU04** **FR-PU07**	**OH Fault**
Name	External thermal relay operation			
Description	If the external thermal relay provided for motor overheat protection or the internally mounted temperature relay in the motor, etc. switches on (contacts open), the inverter output is stopped. Functions when "7" (OH signal) is set to any of Pr. 178 to Pr. 182 "Input terminal function selection". This protective function does not function in the initial status (OH signal is not assigned).			
Check point	• Check for motor overheating. • Check that the value of "7" (OH signal) is set correctly in any of Pr. 178 to Pr. 182 "Input terminal function selection".			
Corrective action	• Reduce the load and frequency of operation. • Even if the relay contacts are reset automatically, the inverter will not restart unless it is reset.			

Operation Panel Indication	**E.PTC**	E.PTC	**FR-PU04**	**Fault 14**
			FR-PU07	**PTC activated**
Name	PTC thermistor operation			
Description	Inverter trips when resistance of PTC thermistor connected between terminal 2 and terminal 10 is more than the value set in Pr. 561. This protective function does not function when Pr. 561 setting is initial value (Pr. 561 = "9999").			
Check point	• Check the connection of the PTC thermistor. • Check the Pr. 561 setting. • Check the motor for operation under overload.			
Corrective action	• Reduce the load weight.			

Operation Panel Indication	**E.PE**	E. PE	**FR-PU04** **FR-PU07**	**Corrupt Memry**
Name	Parameter storage device alarm (control circuit board)			
Description	Appears when a fault occurred in the stored parameters. (EEPROM fault).			
Check point	Check for too many number of parameter write times.			
Corrective action	Please contact your sales representative. When performing parameter write frequently for communication purposes, set "1" in Pr. 342 to enable RAM write. Note that powering off returns the inverter to the status before RAM write.			

Operation Panel Indication	**E.PUE**	E.PUE	**FR-PU04** **FR-PU07**	**PU Leave Out**
Name	PU disconnection			
Description	This function stops the inverter output if communication between the inverter and PU (FR-PU04/FR-PU07) is suspended, e.g. the parameter unit is disconnected, when "2", "3", "16" or "17" was set in Pr. 75 "Reset selection/disconnected PU detection/PU stop selection". This function stops the inverter output when communication errors occurred consecutively for more than permissible number of retries when a value other than "9999" is set in Pr. 121 "Number of PU communication retries" during the RS485 communication with the PU connector (use Pr. 502 "Stop mode selection at communication error" to change). This function also stops the inverter output if communication is broken within the period of time set in Pr. 122 "PU communication check time interval" during the RS485 communication with the PU connector.			
Check point	• Check that the parameter unit (FR-PU04/FR-PU07) is fitted tightly. • Check the Pr. 75 setting. • Check that RS485 communication data is correct. And check that the settings of communication parameter at inverter match settings of the computer. • Check that data is transmitted from the computer within a time set in Pr. 122.			
Corrective action	Connect the parameter unit (FR-PU04/FR-PU07) securely. Check the communication data and communication settings. Increase the Pr. 122 setting or set "9999" (no communication check).			

Operation Panel Indication	**E.RET**	E.rET	**FR-PU04** **FR-PU07**	**Retry No Over**
Name	Retry count excess			
Description	If operation cannot be resumed properly within the number of retries set, this function trips the inverter. Functions only when Pr. 67 "Number of retries at fault occurrence" is set. When the initial value (Pr. 67 = 0) is set, this protective function does not function.			
Check point	Find the cause of fault occurrence.			
Corrective action	Eliminate the cause of the error preceding this error indication.			

Operation Panel Indication	**E. 5**	E. 5	**FR-PU04** **FR-PU07**	**Fault 5**
	E.CPU	E.CPU		**CPU Fault**
Name	CPU fault			
Description	Stops the inverter output if the communication fault of the built-in CPU occurs.			
Check point	Check for devices producing excess electrical noises around the inverter.			
Corrective action	• Take measures against noises if there are devices producing excess electrical noises around the inverter. • Please contact your sales representative.			

Operation Panel Indication	**E.CDO**	E.CdO	**FR-PU04**	**Fault 14**
			FR-PU07	**OC detect level**
Name	Output current detection value exceeded			
Description	This function is activated when the output current exceeds the Pr. 150 "Output current detection level" setting.			
Check point	Check the settings of Pr. 150 "Output current detection level", Pr. 151 "Output current detection signal delay time", Pr. 166 "Output current detection signal retention time", Pr. 167 "Output current detection operation selection". (Refer to 6.9.7).			

Operation Panel Indication	**E.IOH**	E.IOH	**FR-PU04** **FR-PU07**	**Fault 14**
				Inrush overheat
Name	Inrush current limit circuit fault			
Description	This function is activated when the resistor of the inrush current limit circuit overheats. The inrush current limit circuit fault.			
Check point	Check that frequent power ON/OFF is not repeated.			
Corrective action	Configure a circuit where frequent power ON/OFF is not repeated. If the problem still persists after taking the above measure, please contact your sales representative.			

Operation Panel Indication	**E.AIE**	E.AI E	**FR-PU04** **FR-PU07**	**Fault 14** **Analog in error**
Name	Analog input fault			
Description	Appears if voltage(current) is input to terminal 4 when the setting in Pr. 267 "Terminal 4 input selection" and the setting of voltage/current input switch are different.			
Check point	Check the setting of Pr. 267 "Terminal 4 input selection" and voltage/current input switch.			
Corrective action	Either give a frequency command by current input or set Pr. 267 Terminal 4 input selection, and voltage/current input switch to voltage input. (Refer to section 6.15.1.)			

Operation Panel Indication	**E.SAF**	E.SAF	**FR-PU04** **FR-PU07**	**Fault 14** **Fault E.SAF**
Name	Safety circuit fault			
Description	Appears when safety circuit is malfunctioning. Appears when one of the lines between S1 and SC, or between S2 and SC is opened.			
Check point	• Check if the shorting wire between S1 and SC or between S2 and SC is disconnected when not using the safety stop function. • Check that the safety relay module or the connection has no fault when using the safety stop function.			
Corrective action	• When not using the safety stop function, short across terminals S1 and SC and across S2 and SC with shorting wire. (Refer to section 3.4.3.) • When using the safety stop function, check that wiring of terminal S1, S2 and SC is correct and the safety stop input signal source such as safety relay module is operating properly. Refer to the Safety stop function instruction manual "FR-D700 SC EC – Safety stop function instruction manual, document no.: BCN-A211508-005" for causes and countermeasures.			

NOTES

If protective functions of E.ILF, E.AIE, E.IOH, E.PTC, E.CDO or E.SAF are activated when using the FR-PU04, "Fault 14" is displayed. Also when the faults history is checked on the FR-PU04, the display is "E.14".

If faults other than the above appear, contact your sales representative.

7.3 Reset method of protective function

Eliminate the cause of the error before you reset the inverter. Note that the internal thermal integrated value of the electronic thermal relay function and the number of retries are cleared (erased) by resetting the inverter. It takes about 1s for reset.

The inverter can be reset by performing any of the following operations:

- Using the operation panel, press the STOP/RESET key to reset the inverter.
  (Enabled only when the inverter protective function is activated (major fault). (Refer to page 7-9 for major fault.))

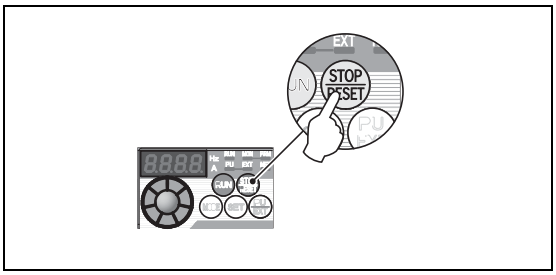

Fig. 7-1:
Resetting the inverter by using the operation panel

I002022E

- Switch OFF the power once, then switch it ON again after the indicator of the operation panel turns OFF.

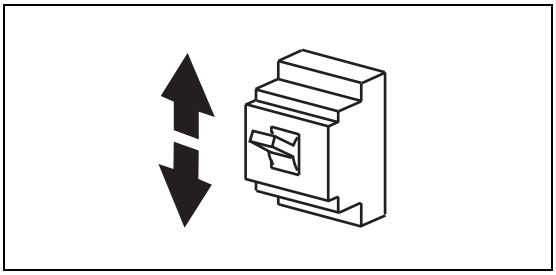

Fig. 7-2:
Resetting the inverter by switching the power supply off an on

I001297E

- Turn on the reset signal RES for more than 0.1s. (Connect the terminals RES and SD when using sink logic or terminals RES and PC as shown Fig. 7-3 when using source logic).
  (If the RES signal is kept on, "Err." appears (flickers) to indicate that the inverter is in the reset status.)

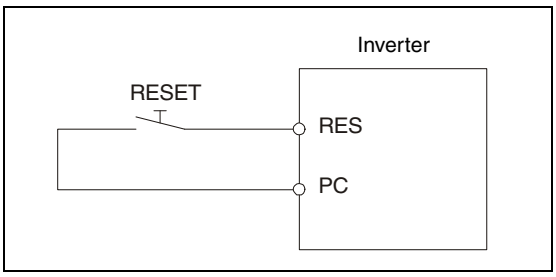

Fig. 7-3:
Resetting the inverter by turning on the RES signal

I000249C

CAUTION:
OFF status of the start signal must be confirmed before resetting the inverter fault. Resetting inverter fault with the start signal ON restarts the motor suddenly.

7.4 LED display

In contrast to the LC display on the (optional) parameter unit FR-PU04/FR-PU07, alphanumeric characters are displayed on the LED display of the control panel in a somewhat simplified form. There are the following correspondences between the actual alphanumeric characters and the digital characters displayed on the operation panel.

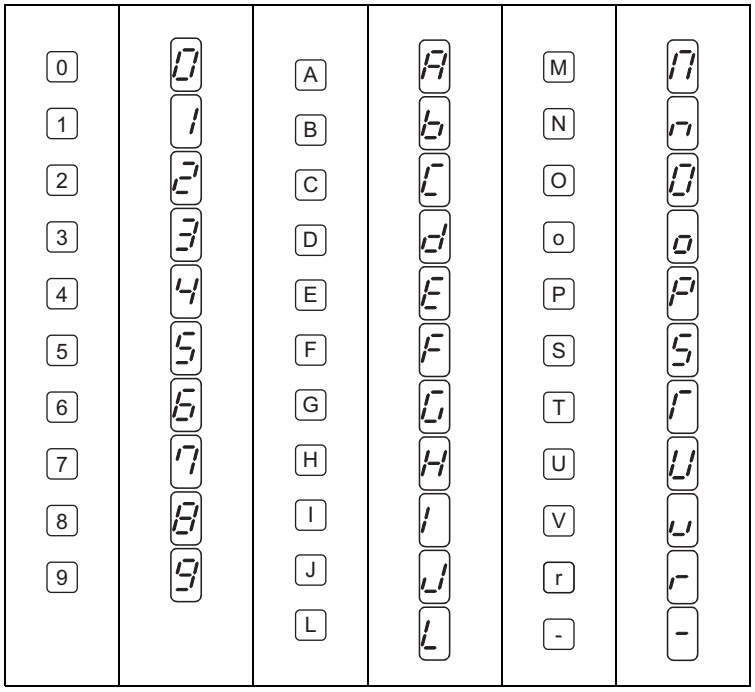

Fig. 7-4: *Correspondences between digital and actual characters (operation panel)*

7.5 Check and clear of the fault history

Check for the fault history

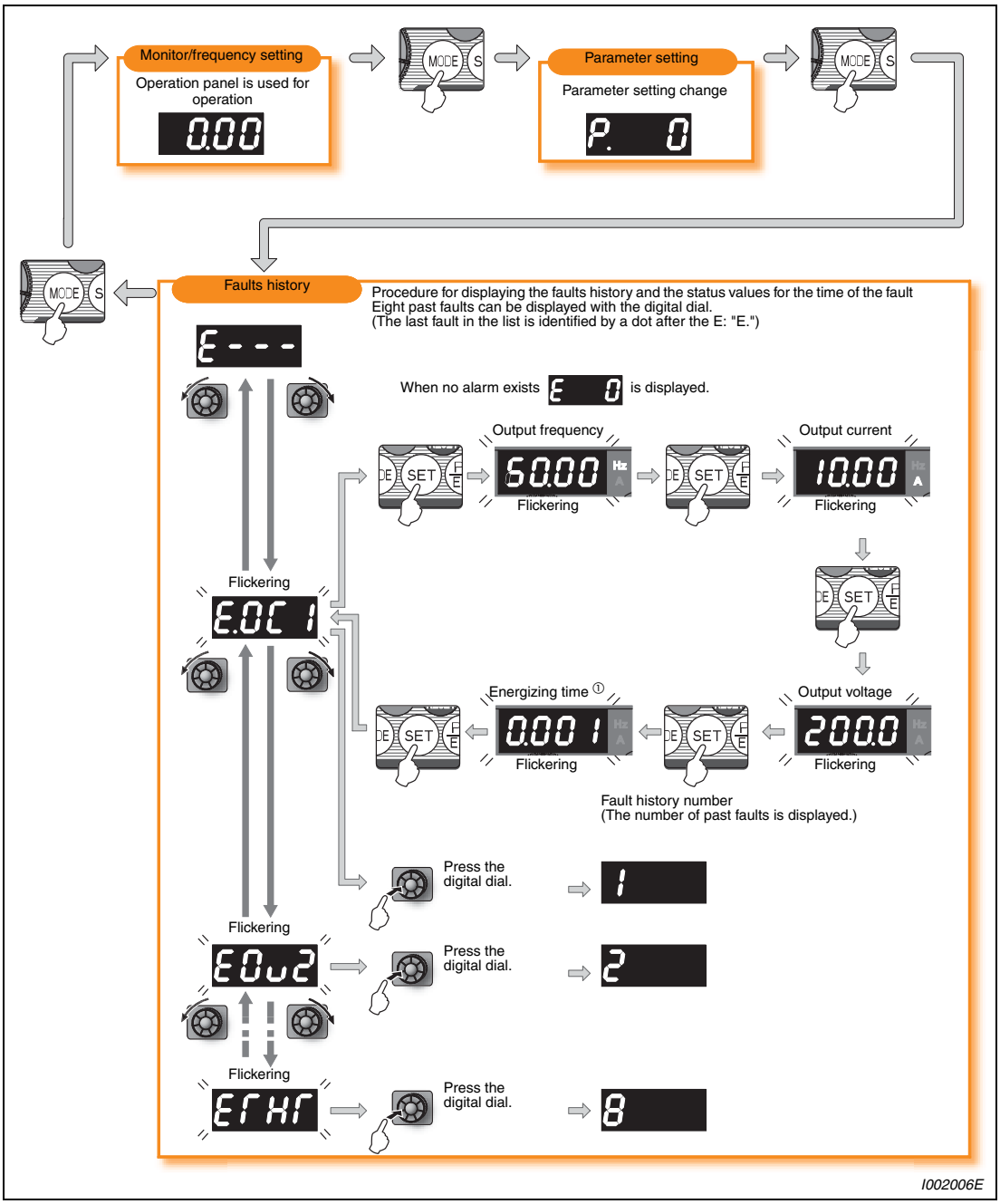

Fig. 7-5: *Displaying the fault list and the status values for the time of the fault*

① The cumulative energization time and actual operation time are accumulated from 0 to 65535 hours, then cleared, and accumulated again from 0. When the operation panel is used, the time is displayed up to 65.53 (65530h) in the indication of 1h = 0.001, and thereafter, it is added up from 0.

Clearing procedure

The fault history can be cleared by setting "1" in Er.CL "Faults history clear". (The fault history is not cleared when "1" is set in Pr. 77 "Parameter write selection".)

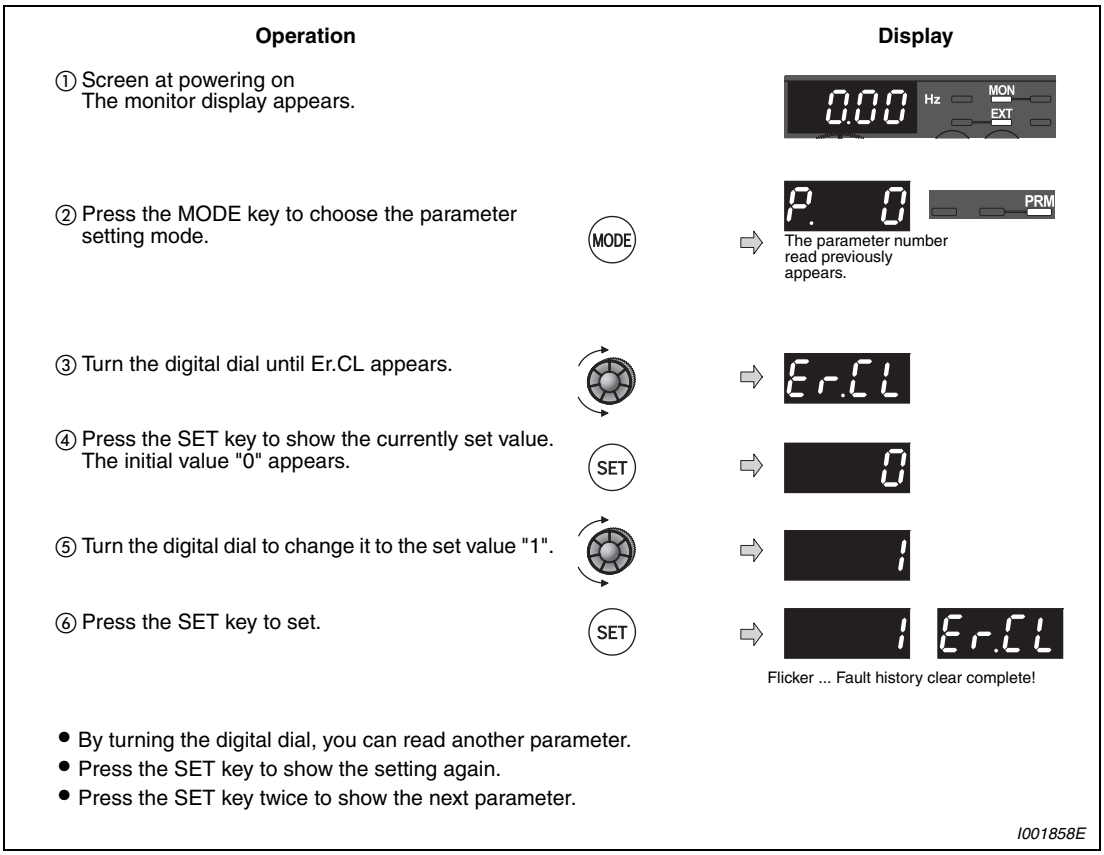

Fig. 7-6: *Clearing the fault history*

7.6 Check first when you have troubles

7.6.1 Motor does not start

Check points	Possible Cause	Countermeasures	Refer to Page
Main Circuit	Appropriate power supply voltage is not applied. (Operation panel display is not provided.)	Power ON a moulded case circuit breaker (MCCB), an earth leakage circuit breaker (ELB), or a magnetic contactor (MC).	—
		Check for the decreased input voltage, input phase loss, and wiring.	
	Motor is not connected properly.	Check the wiring between the inverter and the motor.	3-6
	The jumper across P/+ and P1 is disconnected.	Securely fit a jumper across P/+ and P1. When using a DC reactor (FFR-HEL-(H)-E), remove the jumper across P/+ and P1, and then connect the DC reactor.	3-42
Input Signal	Start signal is not input.	Check the start command source, and input a start signal. PU operation mode: RUN key External operation mode : STF/STR signal	6-175
	Both the forward and reverse rotation start signals (STF, STR) are input simultaneously.	Turn ON only one of the forward and reverse rotation start signals (STF or STR). When the STF and STR signals are turned ON simultaneously, a stop command is given.	3-13
	Frequency command is zero. (RUN LED of the operation panel flickers.)	Check the frequency command source and enter a frequency command.	6-175
	AU signal is not ON when terminal 4 is used for frequency setting. (RUN LED of the operation panel flickers.)	Turn ON the AU signal. Turning ON the AU signal activates terminal 4 input.	6-147
	Output stop signal (MRS) or reset signal (RES) is ON. (RUN LED on the operation panel flickers while MRS signal is ON.)	Turn MRS or RES signal OFF. Inverter starts the operation with a given start command and a frequency command after turning OFF MRS or RES signal. Before turning OFF, ensure the safety.	6-91, 7-17
	Jumper connector of sink - source is wrongly selected. (RUN LED of the operation panel flickers.)	Check that the control logic switchover jumper connector is correctly installed. If it is not installed correctly, input signal is not recognized.	3-22
	Shorting wires between S1 and SC, S2 and SC are disconnected.	Short between S1 and SC, S2 and SC with shorting wires.	3-13
	Voltage/current input switch is not correctly set for analog input signal (0 to 5V/0 to 10V, 4 to 20mA). (RUN LED of the operation panel flickers.)	Set Pr. 73, Pr. 267, and a voltage/current input switch correctly, then input an analog signal in accordance with the setting.	3-22
	The STOP/RESET key was pressed (Operation panel indication is "PS".)	During the External operation mode, check the method of restarting from a STOP/RESET key input stop from PU.	7-7
	Two-wire or three-wire type connection is wrong.	Check the connection. Connect STOP signal when three-wire type is used.	6-94

Check points	Possible Cause	Countermeasures	Refer to Page
Parameter Setting	Pr. 0 "Torque boost" setting is improper when V/F control is used.	Increase Pr. 0 setting by 0.5% increments while observing the rotation of a motor. If that makes no difference, decrease the setting.	6-26
	Pr. 78 "Reverse rotation prevention selection" is set.	Check the Pr. 78 setting. Set Pr. 78 when you want to limit the motor rotation to only one direction.	6-167
	Pr. 79 "Operation mode selection" setting is wrong.	Select the operation mode which corresponds with input methods of start command and frequency command.	6-175
	Bias and gain (calibration parameter C2 to C7) settings are improper.	Check the bias and gain (calibration parameter C2 to C7) settings.	6-153
	Pr. 13 "Starting frequency" setting is greater than the running frequency.	Set running frequency higher than Pr. 13. The inverter does not start if the frequency setting signal is less than the value set in Pr. 13.	6-62
	Frequency settings of various running frequency (such as multi-speed operation) are zero. Especially, Pr. 1 "Maximum frequency" is zero.	Set the frequency command according to the application. Set Pr. 1 higher than the actual frequency used.	6-40
	Pr. 15 "Jog frequency" setting is lower than Pr. 13 "Starting frequency".	Set Pr. 15 "Jog frequency" higher than Pr. 13 "Starting frequency".	6-51
	Operation mode and a writing device do not match.	Check Pr. 79, Pr. 338, Pr. 339 and Pr. 551, and select an operation mode suitable for the purpose.	6-172, 6-186
	Start signal operation selection is set by the Pr. 250 "Stop selection".	Check Pr. 250 setting and connection of STF and STR signals.	6-94
	Inverter decelerated to a stop when power failure deceleration stop function is selected.	When power is restored, ensure the safety, and turn OFF the start signal once, then turn ON again to restart. Inverter restarts when Pr. 261="2".	6-134
	Performing auto tuning.	When offline auto tuning ends, press the STOP/RESET key of the operation panel for the PU operation. For the External operation, turn OFF the start signal (STF or STR). This operation resets the offline auto tuning, and the PU's monitor display returns to the normal indication. (Without this operation, next operation cannot be started.)	6-74
	Automatic restart after instantaneous power failure function or power failure stop function is activated. (Performing overload operation with single-phase power input specification model may cause voltage insufficiency, and results in a detection of power failure.)	• Disable the automatic restart after instantaneous power failure function and power failure stop function. • Reduce the load. • Increase the acceleration time if the automatic restart after instantaneous power failure function or power failure stop function occurred during acceleration.	6-123, 6-134
Load	Load is too heavy.	Reduce the load.	—
	Shaft is locked.	Inspect the machine (motor).	—
Others	Operation panel display shows an error (e.g. E.OC1).	When any fault occurs, take an appropriate corrective action, then reset the inverter, and resume the operation.	7-9

7.6.2 Motor or machine generates abnormal noise

Check points	Possible Cause	Countermeasures	Refer to Page
Input signal	Disturbance due to EMI when frequency command is given from analog input (terminal 2, 4).	Take countermeasures against EMI.	3-44
Parameter Setting		Increase the Pr. 74 "Input filter time constant" if steady operation cannot be performed due to EMI.	6-152
Parameter Setting	No carrier frequency noises (metallic noises) are generated.	In the initial setting, Pr. 240 "Soft-PWM operation selection" is enabled to change motor noise to an unoffending complex tone. Therefore, no carrier frequency noises (metallic noises) are generated. Set Pr. 240 = "0" to disable this function.	6-144
	Resonance occurs. (output frequency)	Set Pr. 31 to Pr. 36 "Frequency jump". When it is desired to avoid resonance attributable to the natural frequency of a mechanical system, these parameters allow resonant frequencies to be jumped.	6-42
	Resonance occurs. (carrier frequency)	Change Pr. 72 "PWM frequency selection" setting. Changing the PWM carrier frequency produces an effect on avoiding the resonance frequency of a mechanical system or a motor.	6-144
	Auto tuning is not performed under General-purpose magnetic flux vector control.	Perform offline auto tuning.	6-74
	Gain adjustment during PID control is insufficient.	To stabilize the measured value, change the proportional band (Pr. 129) to a larger value, the integral time (Pr. 130) to a slightly longer time, and the differential time (Pr. 134) to a slightly shorter time. Check the calibration of set point and measured value.	6-242
Others	Mechanical looseness	Adjust machine/equipment so that there is no mechanical looseness.	—
Motor	Operating with output phase loss	Check the motor wiring.	—
	Contact the motor manufacturer.		

7.6.3 Inverter generates abnormal noise

Check points	Possible Cause	Countermeasures	Refer to Page
Fan	Fan cover was not correctly installed when a cooling fan was replaced.	Install a fan cover correctly.	8-8

7.6.4 Motor generates heat abnormally

Check points	Possible Cause	Countermeasures	Refer to Page
Motor	Motor fan is not working (Dust is accumulated.)	Clean the motor fan. Improve the environment.	—
	Phase to phase insulation of the motor is insufficient.	Check the insulation of the motor.	—
Main Circuit	The inverter output voltage (U, V, W) are unbalanced.	Check the output voltage of the inverter. Check the insulation of the motor.	8-2
Parameter Setting	The Pr. 71 "Applied motor" setting is wrong.	Check the Pr. 71 "Applied motor" setting.	6-72
—	Motor current is large.	Refer to "7.6.11 Motor current is too large"	7-28

7.6.5 Motor rotates in opposite direction

Check points	Possible Cause	Countermeasures	Refer to Page
Main Circuit	Phase sequence of output terminals U, V and W is incorrect.	Connect phase sequence of the output cables (terminal U, V, W) to the motor correctly	3-6
Input signal	The start signals (forward rotation, reverse rotation) are connected improperly.	Check the wiring. (STF: forward rotation, STR: reverse rotation)	3-13
	Adjustment by the output frequency is improper during the reversible operation with Pr. 73 "Analog input selection" setting.	Check the setting of Pr. 125, Pr. 126, C2 to C7.	6-153
Parameter Setting	Pr. 40 "RUN key rotation direction selection" setting is incorrect.	Check the Pr. 40 setting.	6-282

7.6.6 Speed greatly differs from the setting

Check points	Possible Cause	Countermeasures	Refer to Page
Input signal	Frequency setting signal is incorrectly input.	Measure the input signal level.	—
	The input signal lines are affected by external EMI.	Take countermeasures against EMI such as using shielded wires for input signal lines.	3-44
Parameter Setting	Pr. 1, Pr. 2, Pr. 18, calibration parameter C2 to C7 settings are improper.	Check the settings of Pr. 1 "Maximum frequency", Pr. 2 "Minimum frequency", Pr. 18 "High speed maximum frequency".	6-40
		Check the calibration parameter C2 to C7 settings.	6-153
	Pr. 31 to Pr. 36 "Frequency jump" settings are improper.	Narrow down the range of frequency jump.	6-42
Load	Stall prevention is activated due to a heavy load.	Reduce the load weight.	—
Parameter Setting		Set Pr. 22 "Stall prevention operation level "higher according to the load. (Setting Pr. 22 too large may result in frequent overcurrent trip (E.OC□).)	6-33
Motor		Check the capacities of the inverter and the motor.	—

7.6.7 Acceleration/deceleration is not smooth

Check points	Possible Cause	Countermeasures	Refer to Page
Parameter Setting	Acceleration/deceleration time is too short.	Increase acceleration/deceleration time.	6-59
	Torque boost (Pr. 0, Pr. 46) setting is improper under V/f control, so the stall prevention function is activated.	Increase/decrease Pr. 0 "Torque boost" setting value by 0.5% increments to the setting.	6-26
	The base frequency does not match the motor characteristics.	For V/f control, set Pr. 3 "Base frequency" and Pr. 47 "Second V/f (base frequency)".	6-44
		For general-purpose magnetic flux vector control, set Pr. 84 "Rated motor frequency".	6-74
	Stall prevention function is activated due to a heavy load.	Reduce the load weight.	—
		Set Pr. 22 "Stall prevention operation level "higher according to the load. (Setting Pr. 22 too large may result in frequent overcurrent trip (E.OC□).)	6-33
		Check the capacities of the inverter and the motor.	—
	Regeneration avoidance operation is performed	If the frequency becomes unstable during regeneration avoidance operation, decrease the setting of Pr. 886 "Regeneration avoidance voltage gain".	6-267

7.6.8 Speed varies during operation

When the slip compensation is selected, the output frequency varies between 0 and 2Hz as with load fluctuates. This is a normal operation and not a fault.

Check points	Possible Cause	Countermeasures	Refer to Page
Input signal	Multi-speed command signal is chattering.	Take countermeasures to suppress chattering.	—
Load	Load varies during an operation.	Select General-purpose magnetic flux vector control.	6-29
Input signal	Frequency setting signal is varying.	Check the frequency reference signal.	—
	The frequency setting signal is affected by EMI.	Set filter to the analog input terminal using Pr. 74 "Input filter time constant".	6-152
		Take countermeasures against EMI, such as using shielded wires for input signal lines.	3-44
	Malfunction is occurring due to the undesirable current generated when the transistor output unit is connected.	Use terminal PC (terminal SD when source logic) as a common terminal to prevent a malfunction caused by undesirable current.	3-29
Parameter Setting	Pr. 80 "Motor capacity" setting is improper for the capacities of the inverter and the motor for General-purpose magnetic flux vector control.	Check the Pr. 80 "Motor capacity"setting.	6-29
	Fluctuation of power supply voltage is too large.	Change the Pr. 19 "Base frequency voltage" setting (about 3%) under V/f control.	6-44
	Hunting occurs by the generated vibration, for example, when structural rigidity at load side is insufficient.	Disable automatic control functions, such as energy saving operation, fast-response current limit function, regeneration avoidance function, General-purpose magnetic flux vector control, and stall prevention. During the PID control, set smaller values to Pr.129 "PID proportional band" and Pr.130 "PID integral time". Adjust so that the control gain decreases and the level of safety increases.	—
		Change Pr. 72 "PWM frequency selection" setting.	6-144
Others	Wiring length exceeds 30m when General-purpose magnetic flux vector control is performed.	Perform offline auto tuning.	6-74
	Wiring length is too long for V/f control, and a voltage drop occurs.	Adjust Pr. 0 Torque boost by increasing with 0.5% increments for low-speed operation.	6-26
		Change to General-purpose magnetic flux vector control.	6-29

7.6.9 Operation mode is not changed properly

Check points	Possible Cause	Countermeasures	Refer to Page
Input signal	Start signal (STF or STR) is ON.	Check that the STF and STR signals are OFF. When either is ON, the operation mode cannot be changed.	6-172
Parameter Setting	Pr. 79 setting is improper.	When the Pr. 79 "Operation mode selection" setting is "0" (initial value), the inverter is placed in the external operation mode at input power-on. At this time, press the PU/EXT key on the operation panel (press the PU key when the parameter unit (FR-PU04/FR-PU07) is used) to switch to the PU operation mode. For other values (1 to 4, 6, 7), the operation mode is limited accordingly.	6-172
	Operation mode and a writing device do not correspond.	Check Pr. 79, Pr. 338, Pr. 339 and Pr. 551, and select an operation mode suitable for the purpose.	6-172, 6-186

7.6.10 Operation panel display is not operating

Check points	Possible Cause	Countermeasures	Refer to Page
Main Circuit	Wiring or installation is improper.	Check for the wiring and the installation.	3-4
		Make sure that the connector is fitted securely across terminal P/+ and P1.	
Control Circuit	Power is not input.	Input the power.	3-4
Parameter Setting	Command sources at the PU operation mode is not be the operation panel. (None of the operation mode displays (PU EXT NET) is lit.)	Check the setting of Pr. 551 "PU mode operation command source selection". (If parameter unit (FR-PU04/FR-PU07) is connected while Pr. 551 = "9999" (initial setting), all the operation mode displays (PU EXT NET) turn OFF.)	6-186

7.6.11 Motor current is too large

Check points	Possible Cause	Countermeasures	Refer to Page
Parameter Setting	Torque boost (Pr. 0, Pr. 46) setting is improper under V/f control, so the stall prevention function is activated.	Increase/decrease Pr. 0 "Torque boost" setting value by 0.5% increments to the setting.	6-26
	V/f pattern is improper when V/f control is performed. (Pr. 3, Pr. 14, Pr. 19)	Set rated frequency of the motor to Pr. 3 "Base frequency". Use Pr. 19 "Base frequency voltage" to set the base voltage (e.g. rated motor voltage).	6-44
		Change Pr. 14 "Load pattern selection" according to the load characteristic.	6-46
	Stall prevention function is activated due to a heavy load.	Reduce the load weight.	—
		Set Pr. 22 "Stall prevention operation level" higher according to the load. (Setting Pr. 22 too large may result in frequent overcurrent trip (E.OC□).)	6-33
		Check the capacities of the inverter and the motor.	—
	Auto tuning is not performed under General-purpose magnetic flux vector control.	Perform offline auto tuning.	6-74

7.6.12 Speed does not accelerate

Check points	Possible Cause	Countermeasures	Refer to Page
Input signal	Start command and frequency command are chattering.	Check if the start command and the frequency command are correct.	—
	The wiring length used for analog frequency command is too long, and it is causing a voltage (current) drop.	Perform analog input bias/gain calibration.	6-153
	Input signal lines are affected by external EMI.	Take countermeasures against EMI, such as using shielded wires for input signal lines.	3-44
Parameter Setting	Pr. 1, Pr. 2, Pr. 18, calibration parameter C2 to C7 settings are improper.	Check the settings of Pr. 1 "Maximum frequency" and Pr. 2 "Minimum frequency". If you want to run the motor at 120Hz or higher, set Pr. 18 "High speed maximum frequency".	6-40
		Check the calibration parameter C2 to C7 settings.	6-153
	Torque boost (Pr. 0, Pr. 46) setting is improper under V/f control, so the stall prevention function is activated.	Increase/decrease Pr. 0 "Torque boost" setting value by 0.5% increments so that stall prevention does not occur.	6-26
	V/f pattern is improper when V/f control is performed. (Pr. 3, Pr. 14, Pr. 19)	Set rated frequency of the motor to Pr. 3 "Base frequency". Use Pr. 19 "Base frequency voltage" to set the base voltage (e.g. rated motor voltage).	6-44
		Change Pr. 14 "Load pattern selection" according to the load characteristic.	6-46
	Stall prevention is activated due to a heavy load.	Reduce the load weight.	—
		Set Pr. 22 "Stall prevention operation level" higher according to the load. (Setting Pr. 22 too large may result in frequent overcurrent trip (E.OC□).)	6-33
		Check the capacities of the inverter and the motor.	—
	Auto tuning is not performed under General-purpose magnetic flux vector control.	Perform offline auto tuning.	6-74
	During PID control, output frequency is automatically controlled to make measured value = set point.		6-242
Main Circuit	Brake resistor is connected between terminal P/+ and P1 by mistake.	Connect an optional brake transistor (FR-ABR) between terminal P/+ and PR.	3-34

7.6.13 Unable to write parameter setting

Check points	Possible Cause	Countermeasures	Refer to Page
Input signal	Operation is being performed (signal STF or STR is ON).	Stop the operation. When Pr. 77 = "0" (initial value), write is enabled only during a stop.	6-165
Parameter Setting	You are attempting to set the parameter in the External operation mode.	Choose the PU operation mode. Or, set Pr. 77 = "2" to enable parameter write regardless of the operation mode.	6-165
	Parameter is disabled by the Pr. 77 "Parameter write selection" setting.	Check Pr. 77 "Parameter write selection" setting.	6-165
	Key lock is activated by the Pr. 161 "Frequency setting/key lock operation selection" setting.	Check Pr. 161 "Frequency setting/key lock operation selection" setting.	6-283
	Operation mode and a writing device do not correspond.	Check Pr. 79, Pr. 338, Pr. 339 and Pr. 551, and select an operation mode suitable for the purpose.	6-172, 6-186

7.7 Meters and measuring methods

NOTE For further information about measurements at the inverter refer to section 8.2.

Since voltages and currents in the primary and secondary side of the inverter include harmonics, different meters indicate different measured values.

When the inverter-to-motor wiring length is large, especially in the 400V class, large-capacity models, the meters and CTs may generate heat due to line-to-line leakage current. Therefore, choose the equipment which has enough allowance for the current rating.

When measuring and indicating the output voltage and output current of the inverter, it is recommended to utilize the AM-5 terminal output function of the inverter. To do this, assign the required parameter to the terminal.

When using measuring instruments for the normal frequency range, carry out the measurements as described below.

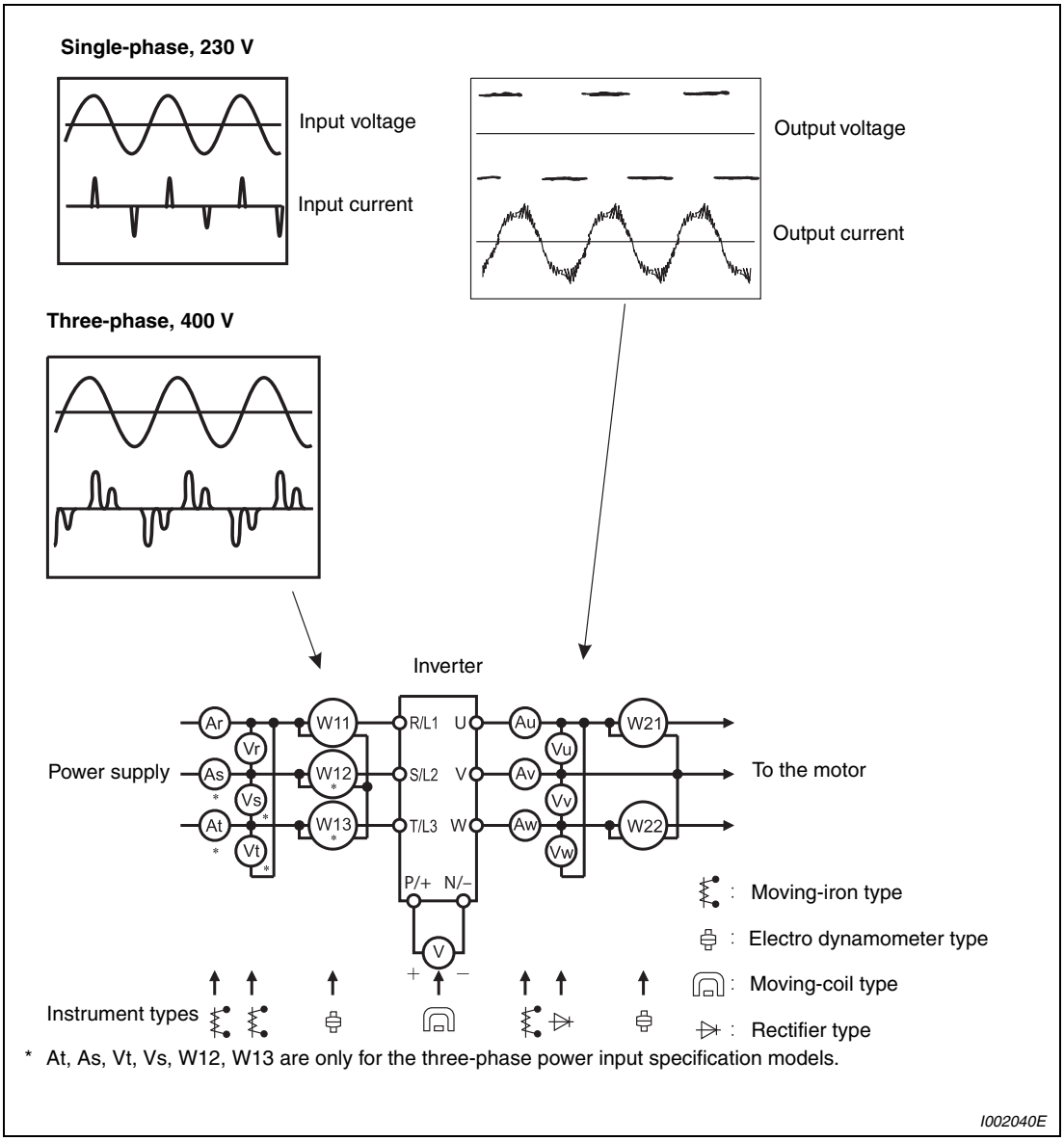

Fig. 7-7: *Measurements at the main circuit*

7.7.1 Measurement of powers

Use digital power meters (for inverter) or an electro-dynamometer type meter, measure the power in both the input and output sides of the inverter using the two- or three-wattmeter method. As the current is liable to be imbalanced especially in the input side, it is recommended to use the three-wattmeter method.

Examples of measured value differences produced by different measuring meters are shown below. An error will be produced by difference between measuring instruments, e.g. power calculation type and two- or three-wattmeter type three-phase wattmeter. When a CT is used in the current measuring side or when the meter contains a PT on the voltage measurement side, an error will also be produced due to the frequency characteristics of the CT and PT.

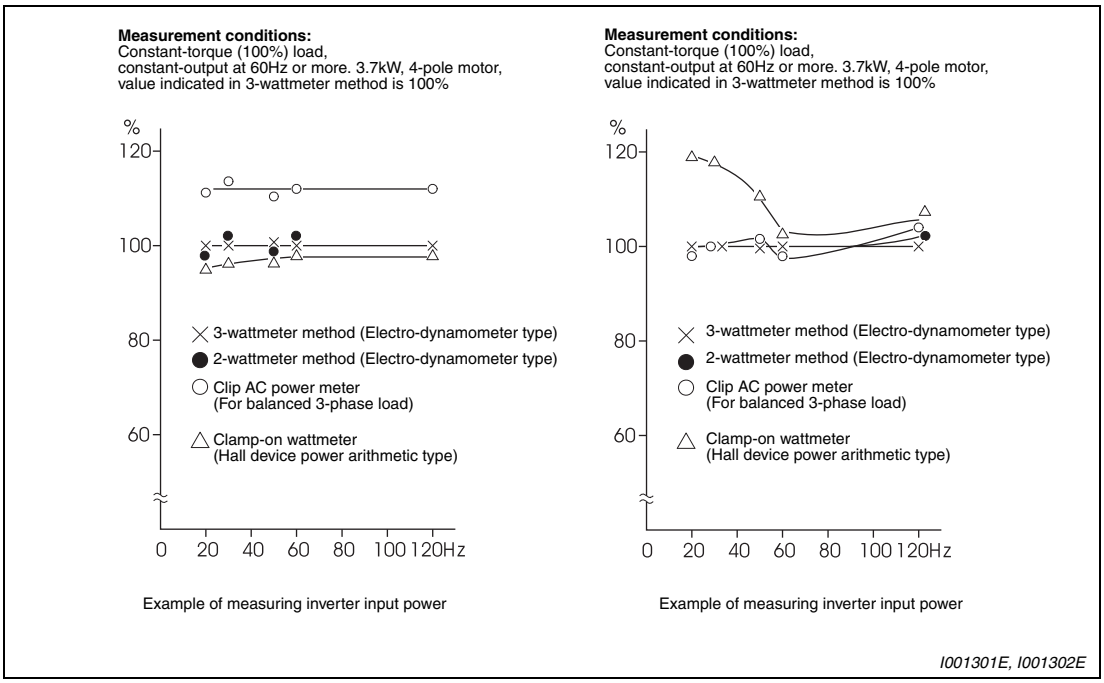

Fig. 7-8: *Differences when measuring power with different instruments*

7.7.2 Measurement of voltages and use of PT

Inverter input side

As the input side voltage has a sine wave and it is extremely small in distortion, accurate measurement can be made with an ordinary AC meter.

Inverter output side

Since the output side voltage has a PWM-controlled rectangular wave, always use a rectifier type voltmeter. A needle type tester can not be used to measure the output side voltage as it indicates a value much greater than the actual value. A moving-iron type meter indicates an effective value which includes harmonics and therefore the value is larger than that of the fundamental wave. The value monitored on the operation panel is the inverter-controlled voltage itself. Hence, that value is accurate and it is recommended to monitor values (provide analog output) using the operation panel.

PT

No PT can be used in the output side of the inverter. Use a direct-reading meter. (A PT can be used in the input side of the inverter.)

7.7.3 Measurement of currents

Use a moving-iron type meter on both the input and output sides of the inverter. However, if the carrier frequency exceeds 5kHz, do not use that meter since an overcurrent losses produced in the internal metal parts of the meter will increase and themeter may burn out. In this case, use an approximate-effective value type.
Since current on the inverter input side tends to be unbalanced, measurement of three phases is recommended. Correct value can not be obtained by measuring only one or two phases. On the other hand, the unbalanced ratio of each phase of the output side current should be within 10%.
When a clamp ammeter is used, always use an effective value detection type. A mean value detection type produces a large error and may indicate an extremely smaller value than the actual value. The value monitored on the operation panel is accurateif the output frequency varies, and it is recommended to monitor values (provide analog output) using the operation panel.
Examples of process value differences produced by different measuring meters are shown below.

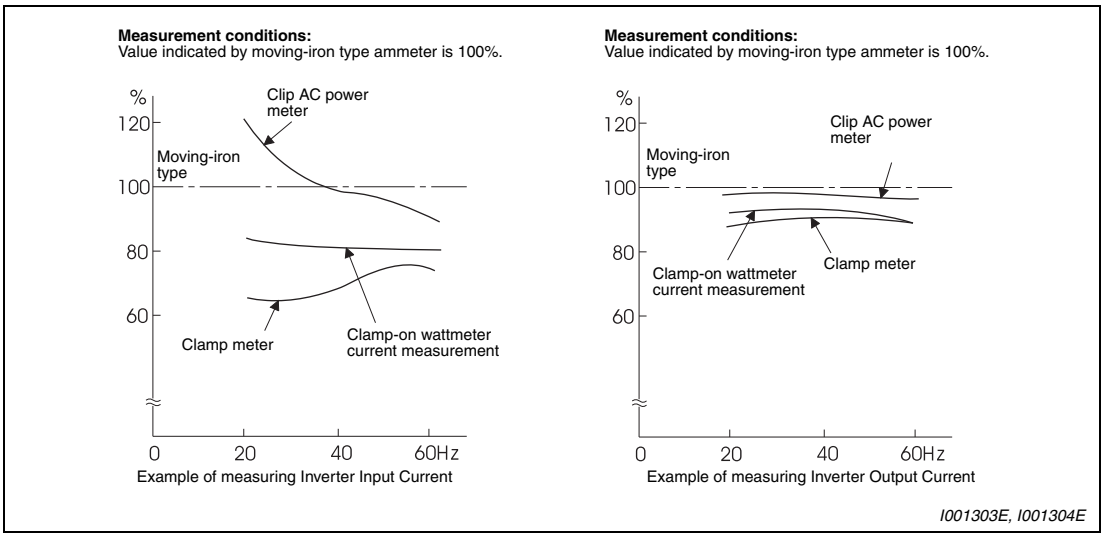

Fig. 7-9: *Differences when measuring currents with different instruments*

7.7.4 Use of CT and transducer

A CT may be used in both the input and output sides of the inverter, but the one used should have the largest possible VA ability because an error will increase if the frequency gets lower. When using a transducer, use the effective value calculation type which is immune to harmonics.

7.7.5 Measurement of inverter input power factor

Use the effective power and apparent power to calculate the inverter input power factor. A power-factor meter cannot indicate an exact value.

$$\text{Total power factor of the inverter} = \frac{\text{Effective power}}{\text{Apparent power}} = \frac{\text{3-phase input power found by 3-wattmeter method}}{\sqrt{3} \times \text{V (power supply voltage)} \times \text{I (input current effective value)}}$$

7.7.6 Measurement of converter output voltage (across terminals P/+ and N/–)

The output voltage of the converter is developed across terminals P/+ and N/– and can be measured with a moving-coil type meter (tester). Although the voltage varies according to the power supply voltage, approximately 270V DC to 300V DC (540V DC to 600V DC for the 400V class) is output when no load is connected and voltage decreases during driving load operation.
When energy is regenerated from the motor during deceleration, for example, the converter output voltage rises to nearly 400V DC to 450V DC (800V DC to 900V DC for the 400V class) maximum. When this value is reached the alarm message E.OV□ is displayed and the inverter output is shut off.

8 Maintenance and inspection

The inverter is a static unit mainly consisting of semiconductor devices. Daily inspection must be performed to prevent any fault from occurring due to the adverse effects of the operating environment, such as temperature, humidity, dust, dirt and vibration, changes in the parts with time, service life, and other factors.

WARNING:

Wait for a period of well over 10 minutes after disconnecting from the power supply before performing any service work on the frequency inverter. This is necessary so that the capacitors can discharge down to a save level (< 25V) after disconnection of the mains power. Check the voltage across the main circuit terminals P/+ and N/– (+ and – respectively) of the inverter using a tester.

8.1 Inspection

8.1.1 Daily inspection

Basically, check for the following faults during operation:

- Motor operation fault
- Improper installation environment
- Cooling system fault
- Unusual vibration and noise
- Unusual overheat and discoloration

8.1.2 Periodic inspection

Check the areas inaccessible during operation and requiring periodic inspection. Consult the nearest Mitsubishi FA Centre for periodic inspection.

- Check for cooling system fault . . . . . Clean the air filter, etc.
- Tightening check and retightening . . . . . The screws and bolts may become loose due to vibration, temperature changes, etc.
  Tighten them according to the specified tightening torque. (Refer to page 3-8.)
- Check the conductors and insulating materials for corrosion and damage.
- Measure insulation resistance.
- Check and change the cooling fan and relay.

When using the safety stop function, periodic inspection is required to confirm that safety function of the safety system operates correctly.

For more details, refer to the “FR-D700 SC EC – Safety stop function instruction manual, document no.: BCN-A211508-005".

8.1.3 Daily and periodic inspection

Area of Inspection	Inspection Item	Description	Interval: Daily	Interval: Periodic ②	Corrective Action at Alarm Occurrence	Customer's check
General	Surrounding environment	Check the ambient temperature, humidity, dirt, corrosive gas, oil mist , etc.	✔		Improve environment	
	Overall unit	Check for unusual vibration and noise.	✔		Check alarm location and retighten	
		Check for a smear like adhered foreign material and oil.	✔		Clean	
	Power supply voltage	Check that the main circuit voltages are normal. ①	✔		Inspect the power supply	
Main circuit	General	1) Check with megger (across main circuit terminals and earth (ground) terminal).		✔	Contact the manufacturer	
		2) Check for loose screws and bolts.		✔	Retighten	
		3) Check for overheat traces on the parts.		✔	Contact the manufacturer	
		4) Check for stain		✔	Clean	
	Conductors, cables	1) Check conductors for distortion.		✔	Contact the manufacturer	
		2) Check cable sheaths for breakage		✔	Contact the manufacturer	
	Transformer/ reactor	Check for unusual odor and abnormal increase in whining sound.	✔		Stop the device and contact the manufacturer.	
	Terminal block	Check for damage.		✔	Stop the device and contact the manufacturer.	
	Smoothing aluminum electrolytic capacitor	1) Check for liquid leakage.		✔	Contact the manufacturer	
		2) Check for safety valve projection and bulge.		✔	Contact the manufacturer	
		3) Visual check and judge by the life check of the main circuit capacitor (Refer to section 8.1.4.)		✔		
	Relay/ contactor	Check that the operation is normal and no chatter is heard.		✔	Contact the manufacturer	
Control circuit/Protective circuit	Operation check	1) Check that the output voltages across phases with the inverter operated alone is balanced.		✔	Contact the manufacturer	
		2) Check that no fault is found in protective and display circuits in a sequence protective operation test.		✔	Contact the manufacturer	
	Parts check: Overall	1) Check for unusual odor and discoloration.		✔	Stop the device and contact the manufacture	
		2) Check for serious rust development.		✔	Contact the manufacturer	
	Parts check: Aluminum electrolytic capacitor	1) Check for liquid leakage in a capacitor and deformation trance		✔	Contact the manufacturer	
		2) Visual check and judge by the life check of the control circuit capacitor. (Refer to section 8.1.4.)		✔		
Cooling system	Cooling fan	1) Check for unusual vibration and noise.	✔		Replace the fan	
		2) Check for a tight fit of the fan cover.		✔	Insert hooks of the fan cover into the holes until you hear a click sound.	
		3) Check for stain.		✔	Clean	
	Heatsink	1) Check for clogging.		✔	Clean	
		2) Check for stain.		✔	Clean	

Tab. 8-1: *Daily and periodic inspection (1)*

Area of Inspection	Inspection Item	Description	Interval		Corrective Action at Alarm Occurrence	Customer's check
			Daily	Periodic ②		
Display	Indication	1) Check that display is normal.	✔		Contact the manufacturer	
		2) Check for stain.		✔	Clean	
	Meter	Check that reading is normal.	✔		Stop the device and contact the manufacturer.	
Load motor	Operqation check	Check for vibration and abnormal increase in operation noise.	✔		Stop the device and contact the manufacturer.	

Tab. 8-1: *Daily and periodic inspection (2)*

① It is recommended to install a device to monitor voltage for checking the power supply voltage to the inverter.

② One to two years of periodic inspection cycle is recommended. However, it differs according to the installation environment. Consult your Mitsubishi dealer for periodic inspection.

8.1.4 Display of the life of the inverter parts

The self-diagnostic alarm is output when the life span of the control circuit capacitor, cooling fan and each parts of the inrush current limit circuit is near to give an indication of replacement time.

For the life check of the main circuit capacitor, the alarm signal (Y90) will not be output if a measuring method using Parameter 259 is not performed. (Refer to the description below.)

The life alarm output can be used as a guideline for life judgement:

Parts	Judgement Level
Main circuit capacitor	85% of the initial capacity
Control circuit capacitor	Estimated 10% life remaining
Inrush current limit circuit	Estimated 10% life remaining (Power on: 100,000 times left)
Cooling fan	Less than 50% of the predetermined speed

Tab. 8-2: *Guideline for the alarm signal output*

NOTE

Refer to section 6.20.2 "Display of the life of the inverter parts" to perform the life check of the inverter parts.

8.1.5 Checking the inverter and converter modules

Disconnect the external power supply cables (R/L1, S/L2, T/L3) and motor cables (U, V, W). Prepare a tester. (Use 100Ω range.)

Change the polarity of the tester alternately at the inverter terminals R/L1, S/L2, T/L3, U, V, W, P/+ and N/–, and check for continuity.

CAUTION:

Before measurement, check that the smoothing capacitor is discharged. The measuring device can otherwise be destroyed

At the time of discontinuity, the measured value is almost ∞. When there is an instantaneous continuity, due to the smoothing capacitor, the tester may not indicate ∞. At the time of continuity, the measured value is several to several ten's-of ohms depending on the module type, circuit tester type, etc. If all measured values are almost thesame, the modules are without fault.

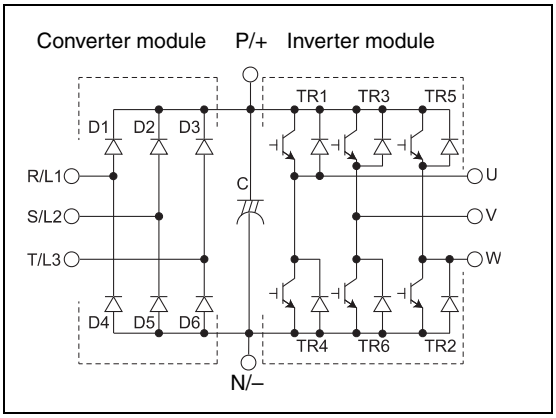

Fig. 8-1:
Module device numbers and terminals to be checked

		Tester Polarity ⊕	Tester Polarity ⊖	Measured Value		Tester Polarity ⊕	Tester Polarity ⊖	Measured Value
Converter module	D1	R/L1	P/+	Discontinuity	D4	R/L1	N/–	Continuity
		P/+	R/L1	Continuity		N/–	R/L1	Discontinuity
	D2	S/L2	P/+	Discontinuity	D5	S/L2	N/–	Continuity
		P/+	S/L2	Continuity		N/–	S/L2	Discontinuity
	D3	T/L3 ①	P/+	Discontinuity	D6	T/L3 ①	N/–	Continuity
		P/+	T/L3 ①	Continuity		N/–	T/L3 ①	Discontinuity
Inverter module	TR1	U	P/+	Discontinuity	TR4	U	N/–	Continuity
		P/+	U	Continuity		N/–	U	Discontinuity
	TR3	V	P/+	Discontinuity	TR6	V	N/–	Continuity
		P/+	V	Continuity		N/–	V	Discontinuity
	TR5	W	P/+	Discontinuity	TR2	W	N/–	Continuity
		P/+	W	Continuity		N/–	W	Discontinuity

Tab. 8-3: *Continuity check of the modules*

① T/L3, D3 and D6 are only for the three-phase power input specification models.

8.1.6 Cleaning

Always run the inverter in a clean status. When cleaning the inverter, gently wipe dirty areas with a soft cloth immersed in neutral detergent or ethanol.

CAUTION:

Do not use solvent, such as acetone, benzene, toluene and alcohol, as they will cause the inverter surface paint to peel off.
The display, etc. of the operation panel and parameter unit (FR-PU04/FR-PU07) are vulnerable to detergent and alcohol. Therefore, avoid using them for cleaning.

8.1.7 Replacement of parts

The inverter consists of many electronic parts such as semiconductor devices. The following parts may deteriorate with age because of their structures or physical characteristics, leading to reduced performance or fault of the inverter. For preventive maintenance, the parts must be replaced periodically. Use the life check function as a guidance of parts replacement.

Part Name	Standard Replacement Interval ①	Description
Cooling fan	10 years	Replace (as required)
Main circuit smoothing capacitor	10 years ②	Replace (as required)
On-board smoothing capacitor	10 years	Replace the board (as required)
Relays	—	As required

Tab. 8-4: *Wearing parts*

① Replacement years for when the yearly average ambient temperature is 40°C (without corrosive gas, flammable gas, oil mist, dust and dirt etc.)

② Output current: 80% of the inverter rated current

NOTE For parts replacement, consult the nearest Mitsubishi FA Centre.

Cooling fan

The replacement interval of the cooling fan used for cooling the parts generating heat such as the main circuit semiconductor is greatly affected by the ambient temperature. When unusual noise and/or vibration is noticed during inspection, the cooling fan must be replaced immediately.

NOTE The FR-D720S-008SC to 042SC and the FR-D740-022SC or less are not provided with a cooling fan.

WARNING:

Switch the power off before replacing fans. Since the inverter circuits are charged with voltage even after power off, replace fans only when the inverter cover is on the inverter to prevent an electric shock accident.

- Removal of the fan

① Push the hooks of the fan cover from above. Remove the fan cover.

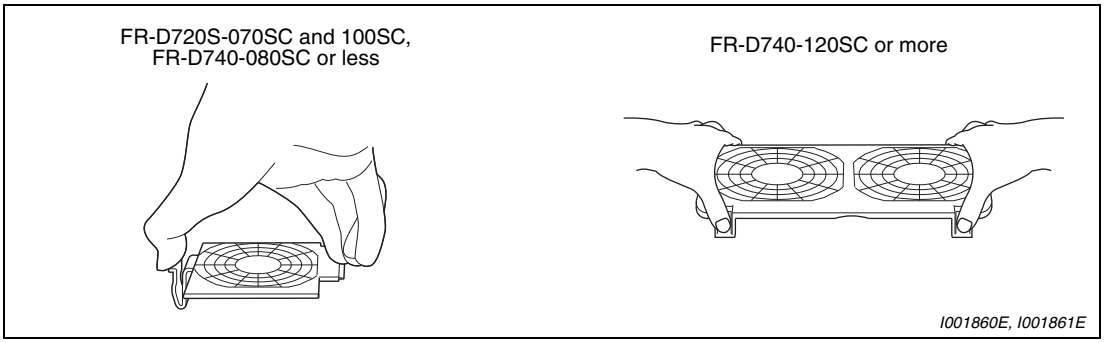

Fig. 8-2: *Removal of the fan cover*

② Disconnect the fan connector.

③ Remove the fan.

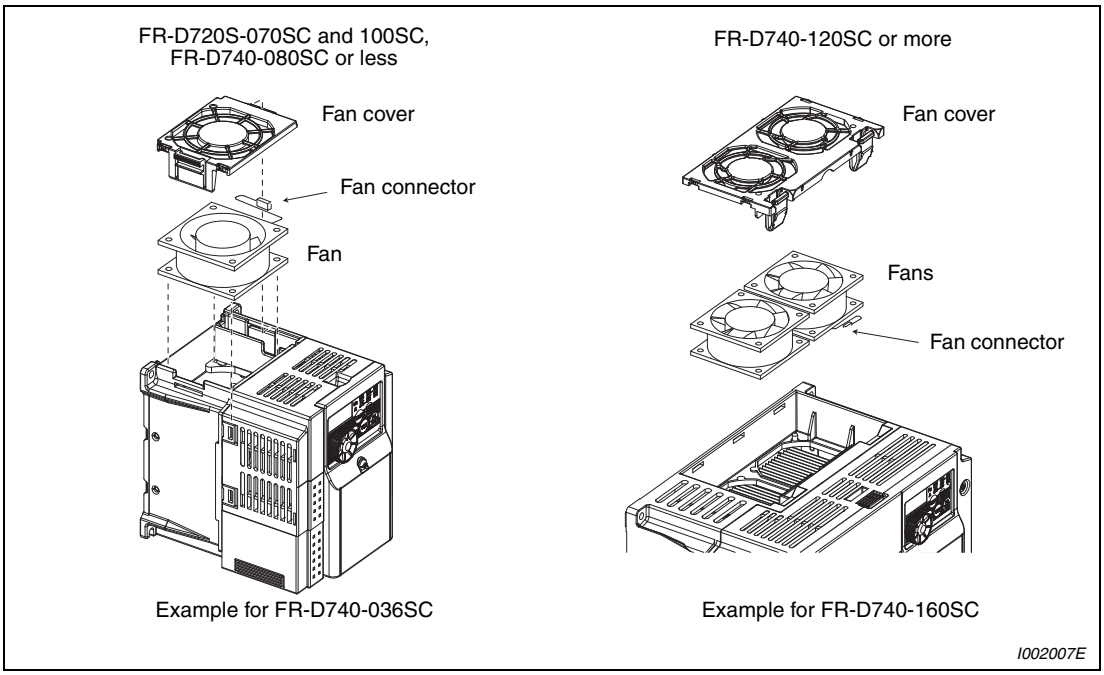

Fig. 8-3: *Removal of the fan*

● Reinstallation of the fan

① After confirming the orientation of the fan, reinstall the fan so that the arrow on the left of "AIR FLOW" faces up.

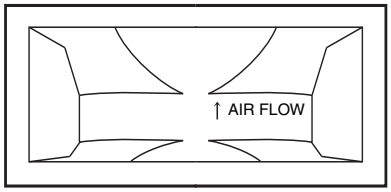

I001864E

Fig. 8-4:
Orientation of the fan

NOTE Installing the fan in the opposite air flow direction can cause the inverter life to be shorter.

② Reconnect the fan connectors. When wiring, use care to avoid the cables being caught by the fan.

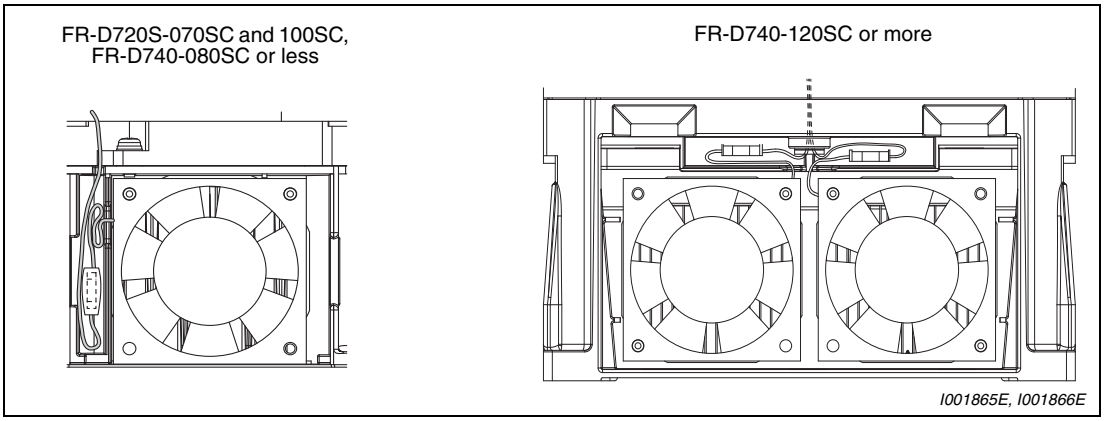

Fig. 8-5: *Connection of the fan*

③ Reinstall the fan cover. Insert hooks into the holes ❶. Insert hooks ❷ until you hear a click sound.

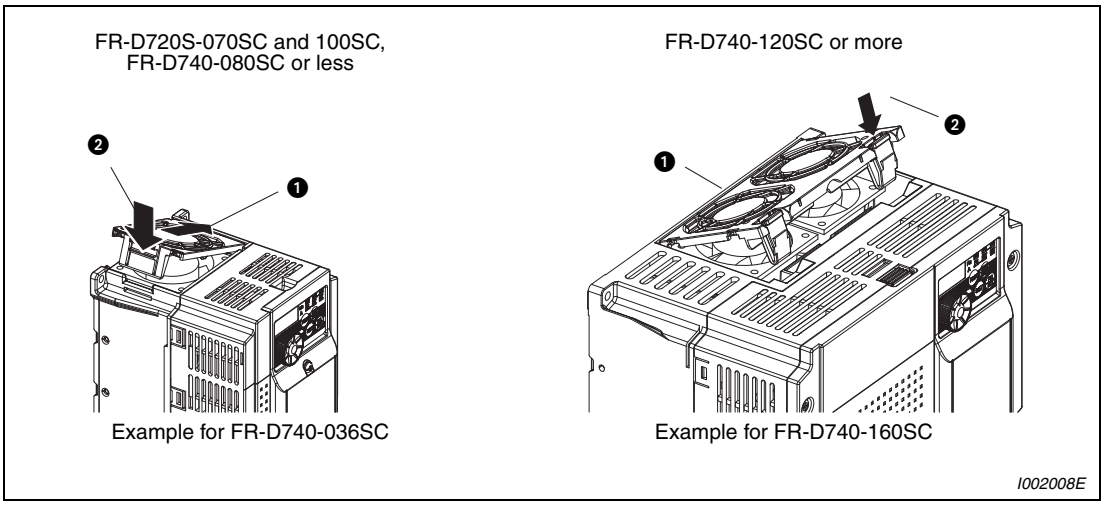

Fig. 8-6: *Reinstall the fan cover*

Smoothing capacitors

A large-capacity aluminum electrolytic capacitor is used for smoothing in the main circuit DC section, and an aluminum electrolytic capacitor is used for stabilizing the control power in the control circuit. Their characteristics are deteriorated by the adverse effects of ripple currents, etc.

The replacement intervals greatly vary with the ambient temperature and operating conditions. When the inverter is operated in air-conditioned, normal environment conditions, replace the capacitors about every 10 years.

Judge that the capacitor has reached its life when the measured capacitance of the capacitor reduced below 80% of the rating.

When a certain period of time has elapsed, the capacitors will deteriorate more rapidly. Check the capacitors at least every year (less than six months if the life will be expired soon).

The appearance criteria for inspection are as follows:

- Case: Check the side and bottom faces for expansion
- Sealing plate: Check for remarkable warp and extreme crack.
- Check for external crack, discoloration, fluid leakage, etc.

Relays

To prevent a contact fault, etc., relays must be replaced according to the cumulative number of switching times (switching life).

8.2 Measurements on the main circuit

This section describes the measurement of the main circuit voltages, currents, powers and insulation resistance.

Please follow as well the instructions for measuring instruments and measuring methods in section 7.7.

8.2.1 Insulation resistance test using megger

For the inverter, conduct the insulation resistance test on the main circuit only as shown below and do not perform the test on the control circuit. (Use a 500V DC megger.)

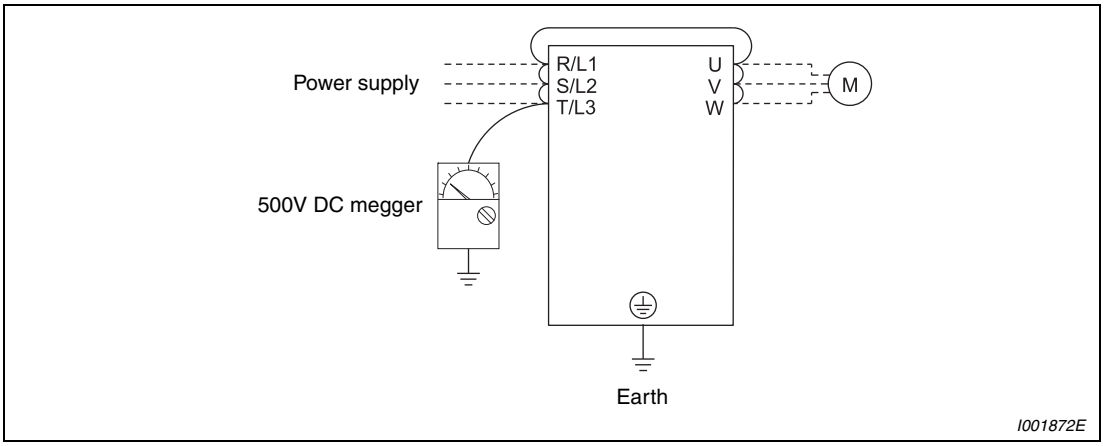

Fig. 8-7: *Insulation resistance test*

CAUTION:

Before performing the insulation resistance test on the external circuit, disconnect the cables from all terminals of the inverter so that the test voltage is not applied to the inverter.

NOTE

For the continuity test of the control circuit, use a tester (high resistance range) and do not use the megger or buzzer.

8.2.2 Pressure test

Do not conduct a pressure test. Deterioration may occur.

8.2.3 Measurement of voltages and currents

Since voltages and currents in the primary and secondary side of the inverter include harmonics, different meters indicate different measured values.

When the inverter-to-motor wiring length is large, especially in the 400V class, large-capacity models, the meters and CTs may generate heat due to line-to-line leakage current. Therefore, choose the equipment which has enough allowance for the current rating.

When measuring and indicating the output voltage and output current of the inverter, it is recommended to utilize the AM-5 terminal output function of the inverter. To do this, assign the required parameter to the terminal.

When using measuring instruments for the normal frequency range, carry out the measurements as described below.

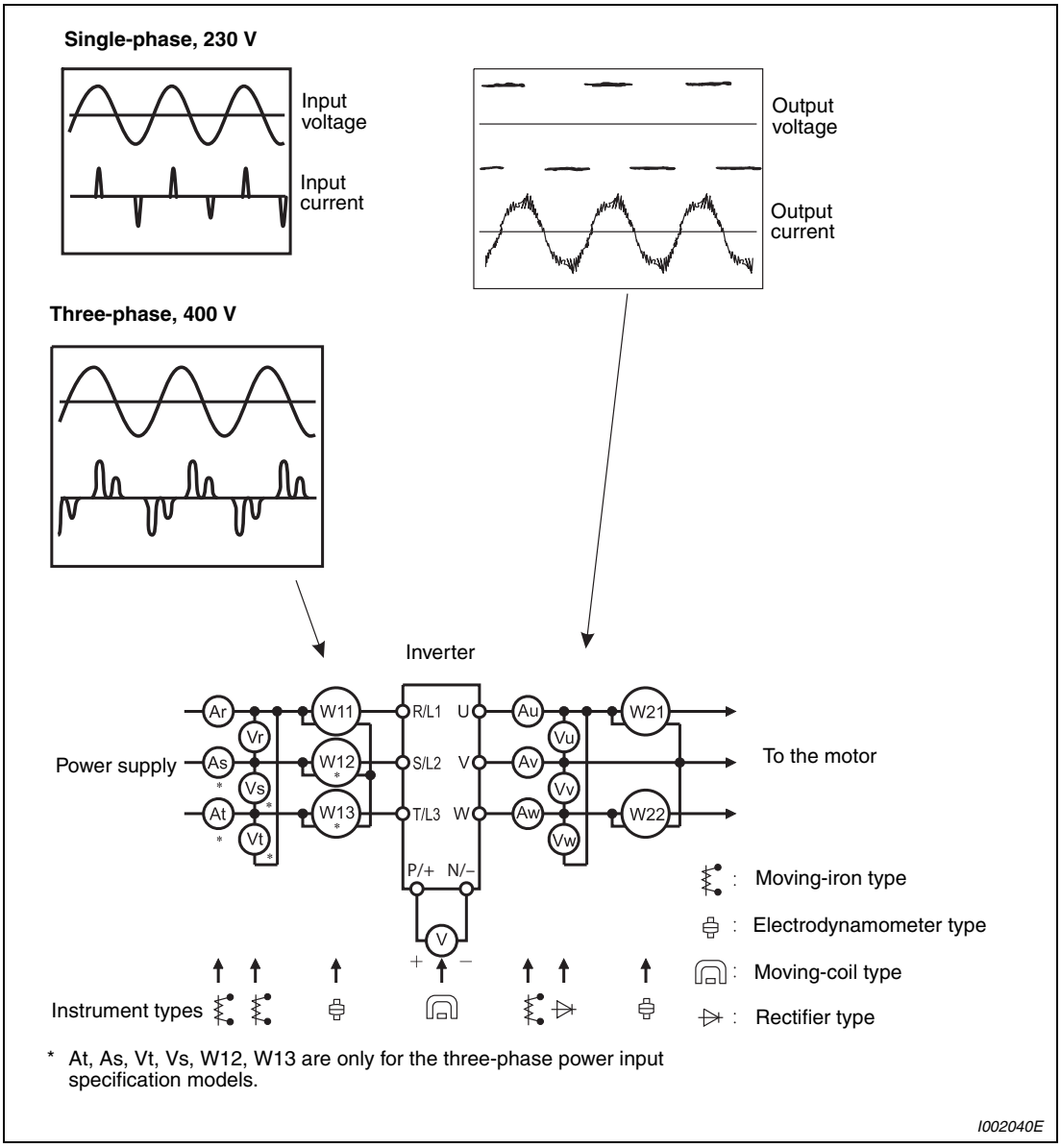

Fig. 8-8: *Examples of measuring points and instruments*

Measuring Points and Instruments

Item	Measuring Point	Measuring Instrument	Remarks (Reference Measurement Value)
Power supply voltage V1	Across R/L1-S/L2, S/L2-T/L3, T/L3-R/L1 ③	Moving-iron type AC voltmeter ④	Commercial power supply Within permissible AC voltage fluctuation (Refer to appendix A)
Power supply side current I1	R/L1, S/L2, and T/L3 line currents ③	Moving-iron type AC ammeter ④	—
Power supply side power P1	R/L1, S/L2, T/L3 and R/L1-S/L2, S/L2-T/L3, T/L3-R/L1 ③	Digital power meter (designed for inverter) or electrodynamic type single-phase wattmeter	P1 = W11 + W12 + W13 (3-wattmeter method)
Power supply side power factor Pf1	Calculate after measuring power supply voltage, power supply side current and power supply side power. Single-phase power supply $Pf1 = \frac{P1}{V1 \times I1} \times 100\ \%$ Three-phase power supply $Pf1 = \frac{P1}{\sqrt{3} \times V1 \times I1} \times 100\ \%$		
Output side voltage V2	Across U-V, V-W and W-U	Rectifier type AC voltage meter ①④ (Moving-iron type cannot measure)	Difference between the phases is within ±1% of the maximum output voltage
Output side current I2	U, V and W line currents	Moving-iron type AC ammeter ②④	Difference between the phases is 10% or lower of the rated inverter current.
Output side power P2	U, V, W and U-V, V-W	Digital power meter (designed for inverter) or electrodynamic type single-phase wattmeter	P2 = W21 + W22 2-wattmeter method (or 3-wattmeter method)
Output side power factor Pf2	Calculate in similar manner to power supply side power factor. $Pf2 = \frac{P2}{\sqrt{3} \times V2 \times I2} \times 100\%$		
Converter output	Across P/+ and N/–	Moving-coil type (such as tester)	Inverter LED display is lit. 1.35 × V1

Tab. 8-5: *Measuring Points and Instruments of the main circuit*

① Use an FFT to measure the output voltage accurately. An FA tester or general measuring instrument cannot measure accurately.

② When the carrier frequency exceeds 5kHz, do not use this instrument since using it may increase eddy-current losses produced in metal parts inside the instrument, leading to burnout. In this case, use an approximate-effective value type.

③ T/L3 is only for the three-phase power input specification models.

④ A digital power meter (designed for inverter) can also be used to measure.

Item	Measuring Point	Measuring Instrument	Remarks (Reference Measurement Value)	
Frequency setting signal	Across 2 (positive) and 5	Moving-coil type (Tester and such may be used) (Internal resistance: 50kΩ or larger)	0 to 10V DC, 4 to 20mA	"5" is common
	Across 4 (positive) and 5			
Frequency setting power supply	Across 10 (positive) and 5		5.2V DC	
Frequency meter signal	Across AM (positive) and 5		Approximately 10V DC at maximum frequency (without frequency meter)	
Start signal Select signal	Across STF, STR, RH, RM, RL and PC (positive)		When open: 20 to 30V DC ON voltage: 1V or less	"PC" is common
Fault signal	Across A-C and B-C	Moving-coil type (such as tester)	Continuity check ① **Normal** / **Abnormal** Across A-C: Discontinuity / Continuity Across B-C: Continuity / Discontinuity	

Tab. 8-6: *Measuring Points and Instruments of the control circuit*

① When the setting of Pr. 192 "ABC terminal function selection" is positive logic.

A Appendix

A.1 Specifications

A.1.1 1-phase, 200V class

Model FR-D720S-□□□SC-EC		008	014	025	042	070	100
Rated motor capacity [kW] ①		0.1	0.2	0.4	0.75	1.5	2.2
Output	Output capacity [kVA] ②	0.3	0.6	1.0	1.7	2.8	4.0
	Rated current [A]	0.8	1.4	2.5	4.2	7.0	10.0
	Overload current rating ③	200% of rated motor capacity for 0.5s; 150% for 60s					
	Voltage ④	3-phase AC, 0V to power supply voltage					
	Regenerative braking torque ⑤	150%		100%		50%	20%
Power supply	Power supply voltage	1-phase, 200–240V AC					
	Voltage range	170–264V AC at 50/60 Hz					
	Power supply frequency	50/60Hz ± 5%					
	Rated input capacity [kVA] ⑥	0.5	0.9	1.5	2.3	4.0	5.2
Protective structure		IP20					
Cooling system		Self cooling				Forced air cooling	
Weight [kg]		0.5	0.5	0.9	1.1	1.5	2.0

Tab. A-1: *Specifications*

① The applied motor capacity indicated is the maximum capacity applicable for use of the Mitsubishi 4-pole standard motor.

② The rated output capacity indicated assumes that the output voltage is 230V.

③ The % value of the overload current rating indicated is the ratio of the overload current to the inverter's rated output current. For repeated duty, allow time for the inverter and motor to return to or below the temperatures under 100% load. If the automatic restart after instantaneous power failure function (Pr. 57) or power failure stop function (Pr. 261) is set and power supply voltage is low while load becomes bigger, the bus voltage decreases to power failure detection level and load of 100% or more may not be available.

④ The maximum output voltage does not exceed the power supply voltage. The maximum output voltage can be changed within the setting range. However, the pulse voltage value of the inverter output side voltage remains unchanged at about $\sqrt{2}$ that of the power supply.

⑤ The braking torque indicated is a short-duration average torque (which varies with motor loss) when the motor alone is decelerated from 60Hz in the shortest time and is not a continuous regenerative torque. When the motor is decelerated from the frequency higher than the base frequency, the average deceleration torque will reduce. Since the inverter does not contain a brake resistor, use the optional brake resistor when regenerative energy is large. A brake unit (FR-BU2) may also be used. Option brake resistor cannot be used for FR-D720S-008SC and 014SC.

⑥ The power supply capacity varies with the value of the power supply side inverter impedance (including those of the input reactor and cables).

A.1.2 3-phase, 400V class

Model FR-D740-□□□SC-EC		012	022	036	050	080	120	160
Rated motor capacity [kW] ①		0.4	0.75	1.5	2.2	3.7	5.5	7.5
Output	Output capacity [kVA] ②	0.9	1.7	2.7	3.8	6.1	9.1	12.2
	Rated current [A] ③	1.2 (1.4)	2.2 (2.6)	3.6 (4.3)	5.0 (6.0)	8.0 (9.6)	12.0 (14.4)	16.0 (19.2)
	Overload current rating ④	200% of rated motor capacity for 0.5 s; 150% for 60 s						
	Voltage ⑤	3-phase AC, 0V to power supply voltage						
	Regenerative braking torque ⑥	100%		50%	20%			
Power supply	Power supply voltage	3-phase, 380–480V AC						
	Voltage range	325–528V AC at 50/60Hz						
	Power supply frequency	50/60 Hz ± 5%						
	Rated input capacity [kVA] ⑦	1.5	2.5	4.5	5.5	9.5	12	17
Protective structure		IP20						
Cooling system		Self cooling		Forced air cooling				
Weight [kg]		1.3	1.3	1.4	1.5	1.5	3.3	3.3

Tab. A-2: *Specifications*

① The applied motor capacity indicated is the maximum capacity applicable for use of the Mitsubishi 4-pole standard motor.

② The rated output capacity indicated assumes that the output voltage is 440V.

③ When operating the inverter with surrounding air temperature of 40°C, the rated output current is shown in ( ).

④ The % value of the overload current rating indicated is the ratio of the overload current to the inverter's rated output current (surrounding air temperature of 50°C max.). For repeated duty, allow time for the inverter and motor to return to or below the temperatures under 100% load.

⑤ The maximum output voltage does not exceed the power supply voltage. The maximum output voltage can be changed within the setting range. However, the pulse voltage value of the inverter output side voltage remains unchanged at about $\sqrt{2}$ that of the power supply.

⑥ The braking torque indicated is a short-duration average torque (which varies with motor loss) when the motor alone is decelerated from 60Hz in the shortest time and is not a continuous regenerative torque. When the motor is decelerated from the frequency higher than the base frequency, the average deceleration torque will reduce. Since the inverter does not contain a brake resistor, use the optional brake resistor when regenerative energy is large. A brake unit (FR-BU2) may also be used.

⑦ The power supply capacity varies with the value of the power supply side inverter impedance (including those of the input reactor and cables).

A.2 Common specifications

FR-D700 SC			Specification
Control specification	Control system		V/f control, optimum excitation control, general-purpose magnetic flux vector control
	Modulation control		Sine evaluated PWM, Soft PWM
	Output frequency range		0.2–400Hz
	Frequency setting resolution	Analog input	0.06Hz/0–50Hz (terminal 2, 4: 0–10V/10bit) 0.12Hz/0–50Hz (terminal 2, 4: 0–5V/9bit) 0.06Hz/0–50Hz (terminal 4: 0–20mA/10bit)
		Digital input	0.01Hz
	Frequency accuracy	Analog input	±1% of the maximum output frequency (temperature range 25°C ±10°C)
		Digital input	±0.01% of the set output frequency
	Voltage/frequency characteristics		Base frequency can be set from 0 to 400Hz Constant torque/variable torque pattern can be selected
	Starting torque		150% or more (at 1Hz) when general-purpose magnetic flux vector control and slip compensation is set
	Torque boost		Manual torque boost
	Acceleration/deceleration time		0.01 to 3600s (can be set individually)
	Acceleration/deceleration characteristics		Linear or S-form course, user selectable
	DC injection brake		Operation frequency (0 to 120Hz), operation time (0 to 10s) and operation voltage (0 to 30%) can be set individually.
	Stall prevention		Responses threshold 0–200%, user adjustable
Control signals for operation	Frequency setting values	Analog input	Terminal 2: 0–5V DC, 0–10V DC Terminal 4: 0–5V DC, 0–10V DC, 0/4–20mA
		Digital input	Entered from operation panel and parameter unit, frequency setting increments is selectable.
	Start signal		Forward and reverse rotation or start signal automatic self-holding input (3-wire input) can be selected.
	Input signals (5 signals)		Any of 5 signals can be selected using parameters 178 to 182 "Input terminal function selection": multi-speed selection, remote setting, second function selection, terminal 4 input selection, JOG operation selection, PID control valid terminal, external thermal input, PU-external operation switchover, V/f switchover, output stop, start self-holding selection, traverse function selection, forward rotation, reverse rotation command, inverter reset, PU-NET operation switchover, external-NET operation switchover, command source switchover, inverter operation enable signal, PU operation external interlock
	Operational functions		Maximum/minimum frequency setting, frequency jump operation, external thermal relay input selection, automatic restart after instantaneous power failure operation, remote setting, forward/reverse rotation prevention, second function selection, multi-speed operation, regeneration avoidance, slip compensation, operation mode selection, offline auto tuning function, PID control, computer link operation (RS485), optimum excitation control, power failure stop, speed smoothing control, Modbus-RTU
	Output signals (Open collector output (two terminals) Relay output (one terminal))	Operating status	Using Pr. 190, Pr. 192 or Pr. 197 "Output terminal function selection" selection can be made from: inverter operation, up-to-frequency, overload alarm, regenerative brake prealarm, electronic thermal relay function prealarm, inverter operation ready, output current detection, zero current detection, PID lower limit, PID upper limit, PID forward/reverse rotation output, fan alarm (FR-D720S-070SC or more, FR-D740-036SC or more), heatsink overheat pre-alarm, deceleration at an instantaneous power failure, PID control activated, safety monitor output, safety monitor output 2, during retry, life alarm, fault output 3, current average value monitor, maintenance timer alarm, remote output, alarm output, fault output
		Analog output (0 to 10V DC: one terminal)	Using Pr. 158 "AM terminal function selection" selection can be made from: output frequency, motor current (steady), output voltage, frequency setting, converter output voltage, regenerative brake duty, electronic thermal relay function load factor, output current peak value, converter output voltage peak value, output power, motor thermal load factor, inverter thermal load factor

Tab. A-3: *Common specifications (1)*

FR-D700 SC			Specification
Display	Operation panel or parameter unit (FR-PU07)	Operating status	You can select from among output frequency, motor current (steady), output voltage, frequency setting, cumulative energization time, actual operation time, converter output voltage, regenerative brake duty, electronic thermal relay function load factor, output current peak value, , converter output voltage peak value, motor load factor, PID set point, PID measured value, PID deviation, inverter I/O terminal monitor, output power, cumulative power, motor thermal load factor, inverter thermal load factor, PTC thermistor resistance.
		Fault definition	Fault definition is displayed when the protective function is activated, the output voltage/current/frequency/cumulative energizing time right before the protection function was activated and the past 8 alarm definitions are stored.
		Interactive guidance ①	Operation guide/trouble shooting with a help function
Protection	Protective functions		Overcurrent (during acceleration, deceleration or constant speed), overvoltage (during acceleration, deceleration or constant speed), inverter protection thermal operation, motor protection thermal operation, heatsink overheat, input phase failure ②, output side earth (ground) fault overcurrent at start ③, output phase failure, external thermal relay operation ③, PTC thermistor operation ③, parameter error, internal board fault, PU disconnection, retry count excess ③, CPU fault, brake transistor alarm, inrush resistance overheat, analog input error, stall prevention operation, output current detection value exceeded ③, safety circuit fault
	Warning functions		Fan alarm (FR-D720S-070SC or more, FR-D740-036SC or more), overcurrent stall prevention, overvoltage stall prevention, PU stop, parameter write error, regenerative brake prealarm ③, electronic thermal relay function prealarm, maintenance output ③, undervoltage, operation panel lock, password locked, inverter reset, Safety stop function
Environment	Ambient temperature		–10°C to +50°C (non-freezing) ④
	Storage temperature ⑤		–20°C to +65°C
	Ambient humidity		Max. 90% (non-condensing)
	Ambience conditions		For indoor use only, avoid environments containing corrosive gases, install in a dust-free location.
	Altitude		Max. 1000m above sea level
	Vibration resistance		Max. 5.9m/s² (JIS 60068-2-6) or less at 10 to 55Hz (directions of X , Y and Z axes)

Tab. A-3: *Common specifications (2)*

① This operation guide is only available with option parameter unit (FR-PU07).

② This protective function is available with the three-phase power input specification model only.

③ This protective function does not function in the initial status.

④ When using the inverters at the ambient temperature of 40°C or less, the inverters can be installed closely attached (0cm clearance).

⑤ The product may only be exposed to the full extremes of this temperature range for short periods (e.g. during transportation).

A.3 Outline dimension drawings

A.3.1 FR-D720S-008SC to 042SC

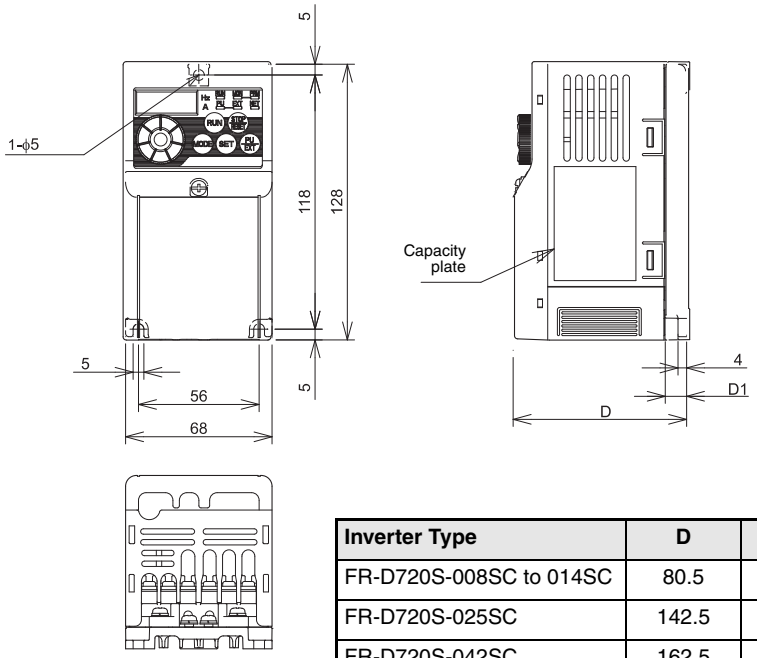

Inverter Type	D	D1
FR-D720S-008SC to 014SC	80.5	10
FR-D720S-025SC	142.5	42
FR-D720S-042SC	162.5	62

All dimensions in mm

I002041E

Fig. A-1: *Dimensions FR-D720S-008SC to 042SC*

A.3.2 FR-D720S-070SC and FR-D740-012SC to 080SC

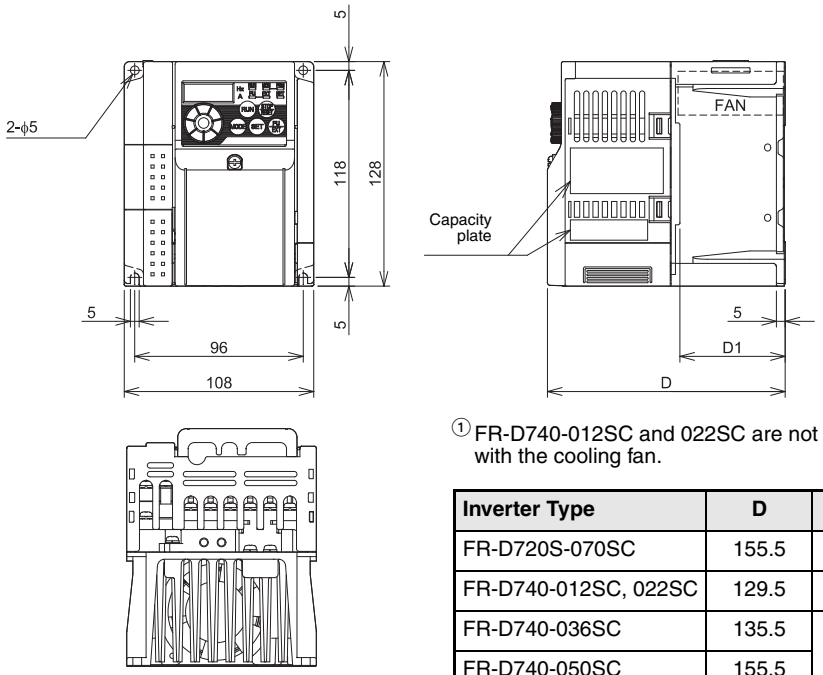

① FR-D740-012SC and 022SC are not provided with the cooling fan.

Inverter Type	D	D1
FR-D720S-070SC	155.5	60
FR-D740-012SC, 022SC	129.5	54
FR-D740-036SC	135.5	60
FR-D740-050SC	155.5	
FR-D740-080SC	165.5	

All dimensions in mm

I002009E

Fig. A-2: *Dimensions FR-D720S-070SC and FR-D740S-012SC to 080SC*

A.3.3 FR-D720S-100SC

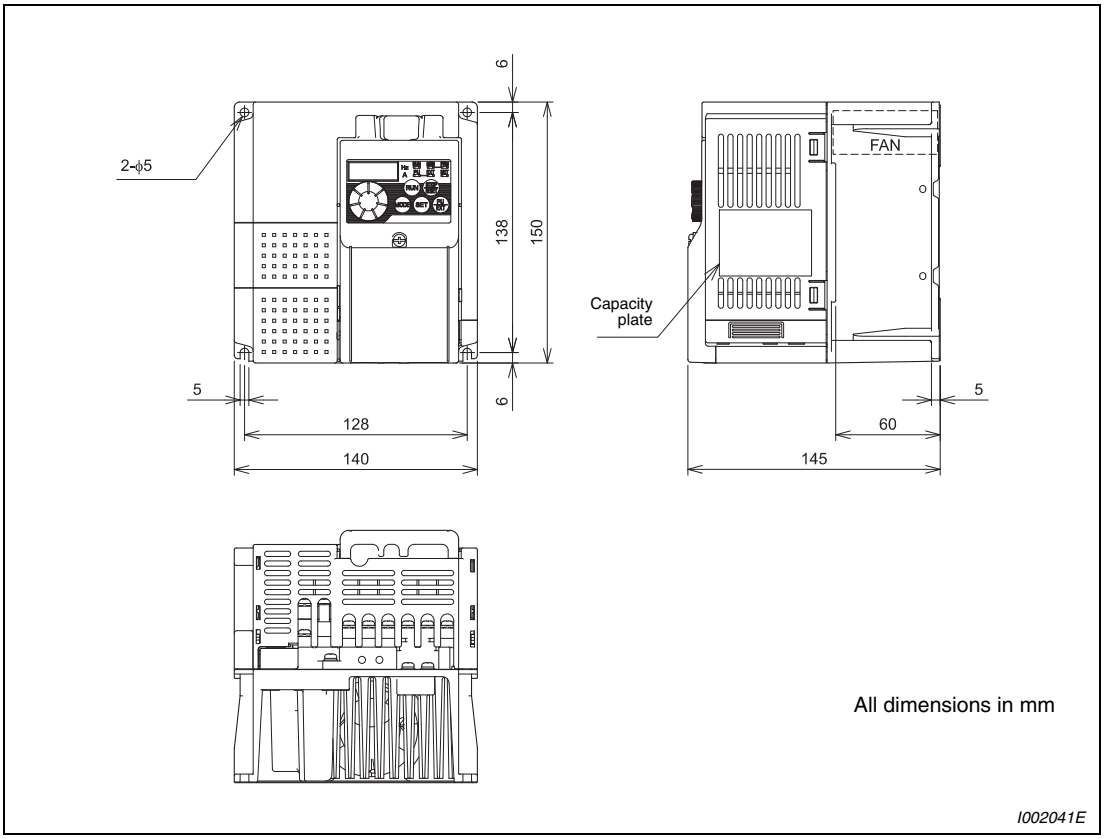

Fig. A-3: *Dimensions FR-D720S-100SC*

A.3.4 FR-D740-120SC and 160SC

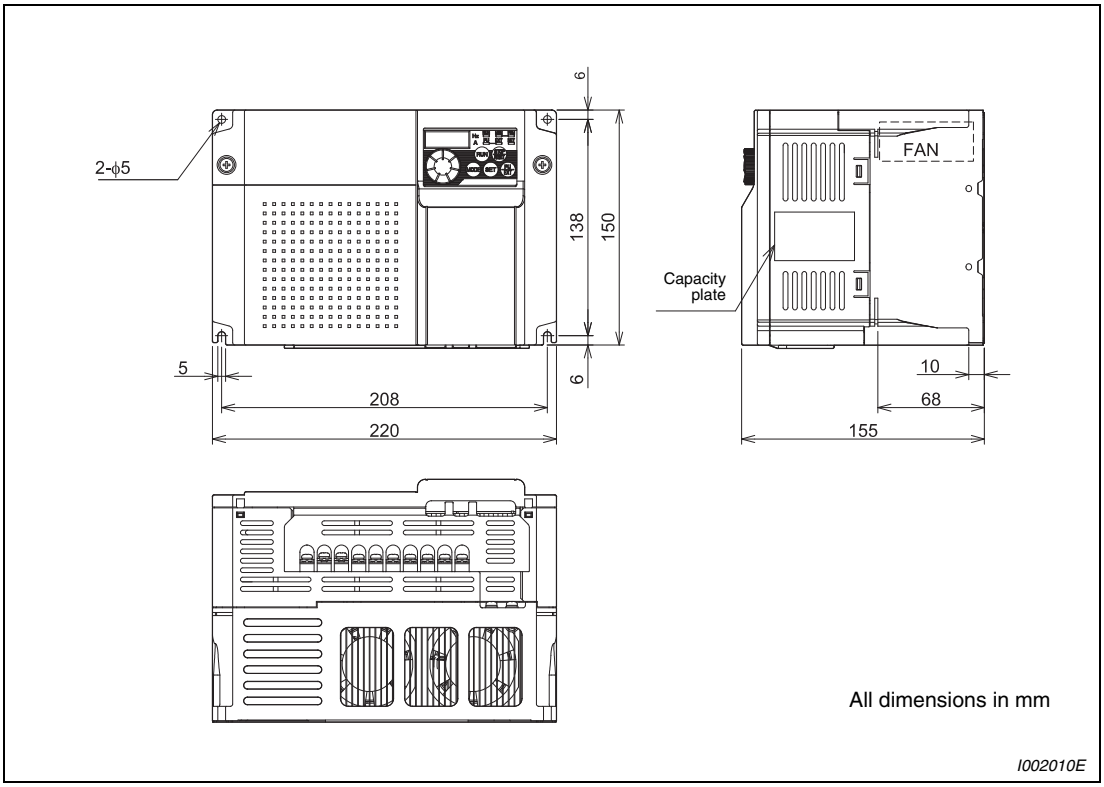

Fig. A-4: *Dimensions FR-D740-120SC and 160SC*

A.3.5 Parameter unit FR-PU07

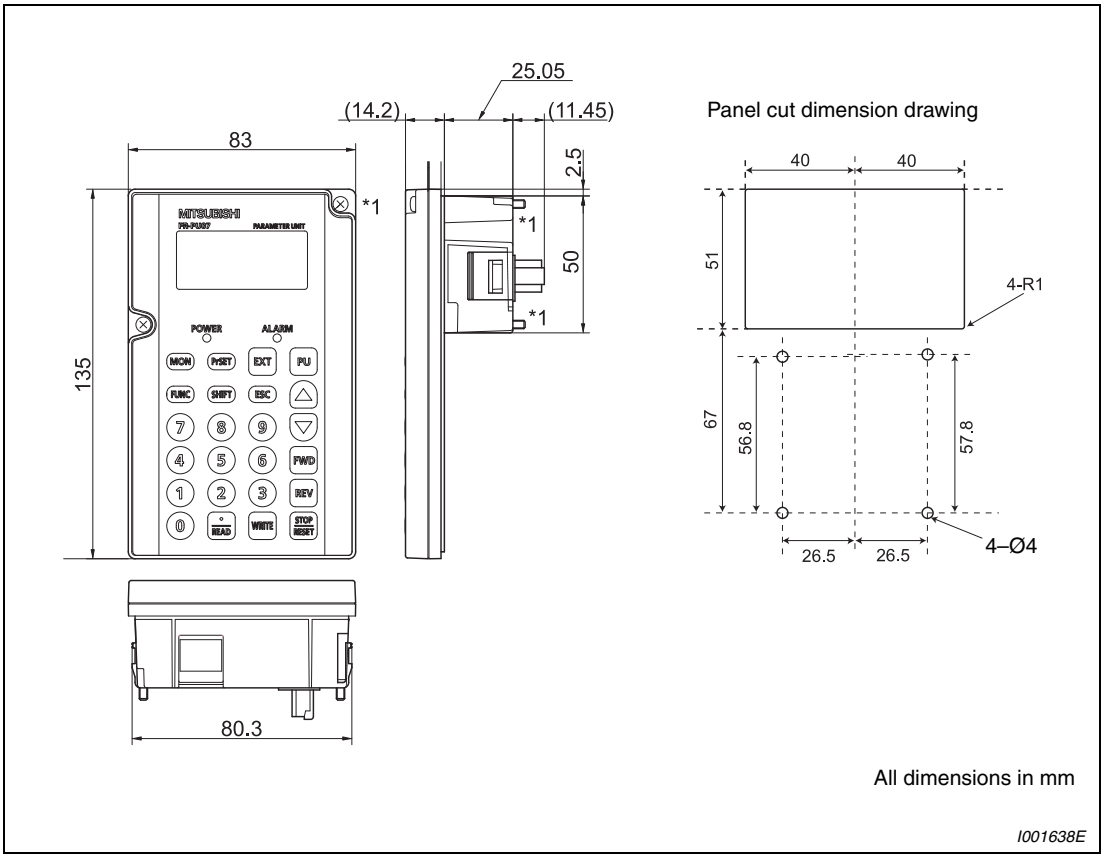

Fig. A-5: *Parameter unit FR-PU07*

NOTES

When installing the FR-PU07 on the enclosure, etc., remove screws or fix the screws to the FR-PU07 with M3 nuts.

The effective depth of the M3 installation screw hole is 5.0mm.

A.3.6 Parameter unit FR-PA07

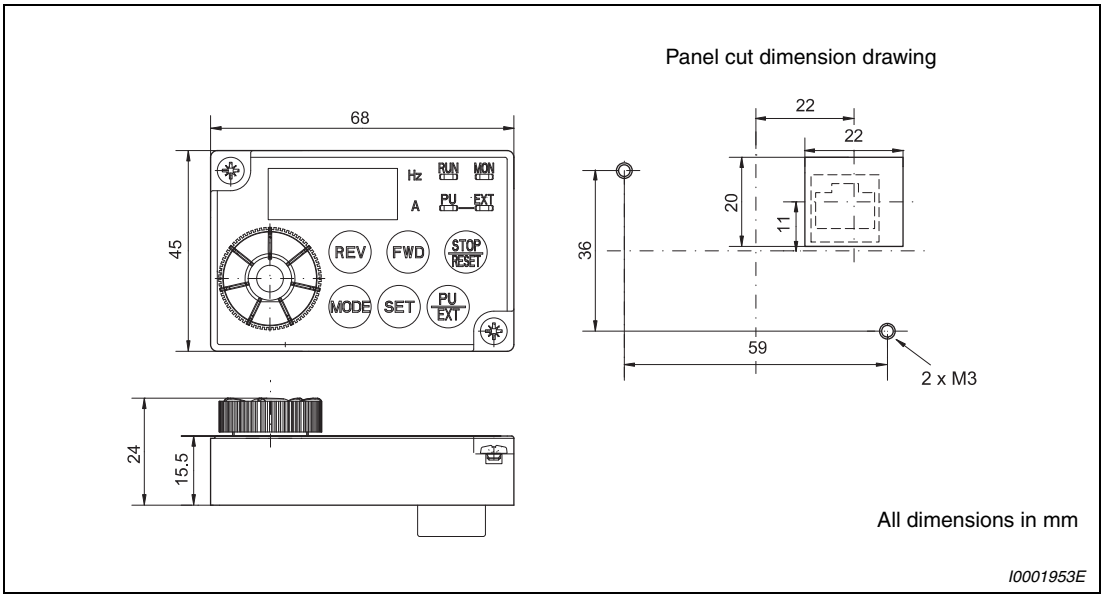

Fig. A-6: *Parameter unit FR-PA07*

A.4 Parameter list with instruction codes

In the initial setting status, simple mode parameters and extended parameters can be displayed. Set Pr. 160 as required. So check the setting of Pr. 160 if parameters are not shown or change the setting of Pr. 160 to lock parameters.

Parameter	Name	Initial Value	Setting Range	Remarks
160	Extended function display selection	0	0	Simple mode and extended mode parameters can be displayed.
			9999	Only the simple mode parameters can be displayed.

Tab. A-4: *Settings of parameter 160*

NOTES

The parameters marked ◎ are the simple mode parameters.

The parameters marked with ▭ in the table allow its setting to be changed during operation even if "0" (initial value) is set in Pr. 77 "Parameter write selection".

The instruction codes (hexadecimal) for "read" and "write" on the right of the parameter number are those used to set the parameter via communication. "Extended" indicates the setting of the extended link parameter (refer to section 6.18). The data code is contained in the table columns to the right next to the parameter number.

The symbols in the table have the following meanings:
✔: Setting the parameter is possible for this operation mode.
—: Setting the parameter is impossible for this operation mode.

Function	Parameter	Instruction Code			Name		Control Mode-based Correspondence Table		Refer to Page	Customer Setting
		Read	Write	Extended			V/f Control	General-Purpose magnetic Flux Vector Control		
Basic functions	◎ 0	00	80	0	Torque boost		✔	—	6-26	
	◎ 1	01	81	0	Maximum frequency		✔	✔	6-40	
	◎ 2	02	82	0	Minimum frequency		✔	✔		
	◎ 3	03	83	0	Base frequency		✔	—	6-44	
	◎ 4	04	84	0	Multi-speed setting	RH	✔	✔	6-48	
	◎ 5	05	85	0		RM	✔	✔		
	◎ 6	06	86	0		RL	✔	✔		
	◎ 7	07	87	0	Acceleration time		✔	✔	6-59	
	◎ 8	08	88	0	Deceleration time		✔	✔		
	◎ 9	09	89	0	Electronic thermal O/L relay		✔	✔	6-66	

Tab. A-5: *Parameter list with instruction codes (1)*

Function	Parameter	Instruction Code			Name		Control Mode-based Correspondence Table		Refer to Page	Customer Setting
		Read	Write	Extended			V/f Control	General-Purpose magnetic Flux Vector Control		
DC injection brake	10	0A	8A	0	DC injection brake operation	Frequency	✔	✔	6-81	
	11	0B	8B	0		Time	✔	✔		
	12	0C	8C	0		Voltage	✔	✔		
—	13	0D	8D	0	Starting frequency		✔	✔	6-62	
—	14	0E	8E	0	Load pattern selection		✔	—	6-46	
Jog operation	15	0F	8F	0	Jog frequency		✔	✔	6-51	
	16	10	90	0	Jog acceleration/deceleration time		✔	✔		
—	17	11	91	0	MRS input selection		✔	✔	6-91	
—	18	12	92	0	High speed maximum frequency		✔	✔	6-40	
—	19	13	93	0	Base frequency voltage		✔	—	6-44	
Acceleration/ deceleration time	20	14	94	0	Acceleration/deceleration reference frequency		✔	✔	6-59	
Stall prevention	22	16	96	0	Stall prevention operation level		✔	✔	6-33	
	23	17	97	0	Stall prevention operation level compensation factor at double speed		✔	✔		
Multi-speed setting	24	18	98	0	Multi-speed setting (speed 4)		✔	✔	6-48	
	25	19	99	0	Multi-speed setting (speed 5)		✔	✔		
	26	1A	9A	0	Multi-speed setting (speed 6)		✔	✔		
	27	1B	9B	0	Multi-speed setting (speed 7)		✔	✔		
—	29	1D	9D	0	Acceleration/deceleration pattern selection		✔	✔	6-64	
—	30	1E	9E	0	Regenerative function selection		✔	✔	6-84 6-123	
Frequency jump	31	1F	9F	0	Frequency jump 1A		✔	✔	6-42	
	32	20	A0	0	Frequency jump 1B		✔	✔		
	33	21	A1	0	Frequency jump 2A		✔	✔		
	34	22	A2	0	Frequency jump 2B		✔	✔		
	35	23	A3	0	Frequency jump 3A		✔	✔		
	36	24	A4	0	Frequency jump 3B		✔	✔		
—	37	25	A5	0	Speed display		✔	✔	6-109	
—	40	28	A8	0	RUN key rotation direction selection		✔	✔	6-282	
Frequency detection (SU, FU)	41	29	A9	0	Up-to-frequency sensitivity		✔	✔	6-103	
	42	2A	AA	0	Output frequency detection		✔	✔		
	43	2B	AB	0	Output frequency detection for reverse rotation		✔	✔		
Second functions	44	2C	AC	0	Second acceleration/deceleration time		✔	✔	6-59 6-255	
	45	2D	AD	0	Second deceleration time		✔	✔		
	46	2E	AE	0	Second torque boost		✔	—	6-26	
	47	2F	AF	0	Second V/F (base frequency)		✔	—	6-44	
	48	30	B0	0	Second stall prevention operation current		✔	✔	6-33	
	51	33	B3	0	Second electronic thermal O/L relay		✔	✔	6-66	

Tab. A-5: *Parameter list with instruction codes (2)*

Function	Parameter	Instruction Code			Name	Control Mode-based Correspondence Table		Refer to Page	Customer Setting
		Read	Write	Extended		V/f Control	General-Purpose magnetic Flux Vector Control		
Monitor functions	**52**	34	B4	0	**DU/PU main display data selection**	✔	✔	6-111	
	55	37	B7	0	**Frequency monitoring reference**	✔	✔	6-118	
	56	38	B8	0	**Current monitoring reference**	✔	✔		
Automatic restart functions	**57**	39	B9	0	**Restart coasting time**	✔	✔	6-123	
	58	3A	BA	0	**Restart cushion time**	✔	✔		
—	**59**	3B	BB	0	**Remote function selection**	✔	✔	6-55	
—	**60**	3C	BC	0	**Energy saving control selection**	✔	—	6-143	
Retry function at alarm occurrence	**65**	41	C1	0	**Retry selection**	✔	✔	6-138	
—	**66**	42	C2	0	**Stall prevention operation reduction starting frequency**	✔	✔	6-33	
Retry function at alarm occurrence	**67**	43	C3	0	**Number of retries at alarm occurrence**	✔	✔	6-138	
	68	44	C4	0	**Retry waiting time**	✔	✔		
	69	45	C5	0	**Retry count display erase**	✔	✔		
—	**70**	46	C6	0	**Special regenerative brake duty**	✔	✔	6-84	
—	**71**	47	C7	0	**Applied motor**	✔	✔	6-29 6-72 6-74	
—	**72**	48	C8	0	**PWM frequency selection**	✔	✔	6-144	
—	**73**	49	C9	0	**Analog input selection**	✔	✔	6-147	
—	**74**	4A	CA	0	**Input filter time constant**	✔	✔	6-152	
—	**75**	4B	CB	0	**Reset selection/disconnected PU detection/ PU stop selection**	✔	✔	6-160	
—	**77**	4D	CD①	0	**Parameter write selection**	✔	✔	6-165	
—	**78**	4E	CE	0	**Reverse rotation prevention selection**	✔	✔	6-167	
—	**◎ 79**	4F	CF①	0	**Operation mode selection**	✔	✔	6-172 6-184	
Vector control	**80**	50	D0	0	**Motor capacity**	—	✔	6-29 6-74	
	82	52	D2	0	**Motor excitation current**	—	✔	6-74	
	83	53	D3	0	**Motor rated voltage**	—	✔		
	84	54	D4	0	**Rated motor frequency**	—	✔		
	90	5A	DA	0	**Motor constant R1**	—	✔		
	96	60	E0	0	**Auto tuning setting/status**	✔	✔	6-74 6-123	

Tab. A-5: *Parameter list with instruction codes (3)*

① Can be written by only communication from the PU connector.

Function	Parameter	Instruction Code			Name	Control Mode-based Correspondence Table		Refer to Page	Customer Setting
		Read	Write	Extended		V/f Control	General-Purpose magnetic Flux Vector Control		
PU connector communication	**117**	11	91	1	**PU communication station number**	✔	✔	6-198 6-224	
	118	12	92	1	**PU communication speed**	✔	✔		
	119	13	93	1	**PU communication stop bit length**	✔	✔	6-198	
	120	14	94	1	**PU communication parity check**	✔	✔	6-198 6-224	
	121	15	95	1	**Number of PU communication retries**	✔	✔	6-198	
	122	16	96	1	**PU communication check time interval**	✔	✔	6-199 6-224	
	123	17	97	1	**PU communication waiting time setting**	✔	✔	6-198	
	124	18	98	1	**PU communication CR/LF selection**	✔	✔		
—	**◎ 125**	19	99	1	**Terminal 2 frequency setting gain frequency**	✔	✔	6-153	
—	**◎ 126**	1A	9A	1	**Terminal 4 frequency setting gain frequency**	✔	✔		
PID control	**127**	1B	9B	1	**PID control automatic switchover frequency**	✔	✔	6-242	
	128	1C	9C	1	**PID action selection**	✔	✔	6-242 6-255	
	129	1D	9D	1	**PID proportional band**	✔	✔		
	130	1E	9E	1	**PID integral time**	✔	✔		
	131	1F	9F	1	**PID upper limit**	✔	✔		
	132	20	A0	1	**PID lower limit**	✔	✔		
	133	21	A1	1	**PID action set point**	✔	✔		
	134	22	A2	1	**PID differential time**	✔	✔		
PU	**145**	2D	AD	1	**PU display language selection**	✔	✔	6-282	
—	**146**	Parameter for manufacturer setting. Do not set.							
Current detection	**150**	32	B2	1	**Output current detection level**	✔	✔	6-105	
	151	33	B3	1	**Output current detection signal delay time**	✔	✔		
	152	34	B4	1	**Zero current detection level**	✔	✔		
	153	35	B5	1	**Zero current detection time**	✔	✔		
—	**156**	38	B8	1	**Stall prevention operation selection**	✔	✔	6-33	
—	**157**	39	B9	1	**OL signal output timer**	✔	✔		
Display selection	**158**	3A	BA	1	**AM terminal function selection**	✔	✔	6-111	
—	**◎ 160**	00	80	2	**Extended function display selection**	✔	✔	6-168	
—	**161**	01	81	2	**Frequency setting/key lock operation selection**	✔	✔	6-283	
Automatic restart functions	**162**	02	82	2	**Automatic restart after instantaneous power failure selection**	✔	✔	6-123	
	165	05	85	2	**Stall prevention operation level for restart**	✔	✔		
Current detection	**166**	06	86	2	**Output current detection signal retention time**	✔	✔	6-105	
	167	07	87	2	**Output current detection operation selection**	✔	✔		
—	**168**	Parameter for manufacturer setting. Do not set.							
—	**169**								

Tab. A-5: *Parameter list with instruction codes (4)*

Function	Para-meter	Instruction Code			Name		Control Mode-based Correspondence Table		Refer to Page	Customer Setting
		Read	Write	Extended			V/f Control	General-Purpose magnetic Flux Vector Control		
Cumulative monitor clear	**170**	0A	8A	2	**Watt-hour meter clear**		✔	✔	6-111	
	171	0B	8B	2	**Operation hour meter clear**		✔	✔		
Input terminal function assignment	**178**	12	92	2	**Function selection**	**STF terminal**	✔	✔	6-88	
	179	13	93	2		**STR terminal**	✔	✔		
	180	14	94	2		**RL terminal**	✔	✔		
	181	15	95	2		**RM terminal**	✔	✔		
	182	16	96	2		**RH terminal**	✔	✔		
Output terminal function assignment	**190**	1E	9E	2	**Function selection**	**RUN terminal**	✔	✔	6-98	
	192	20	A0	2		**A, B and C terminal**	✔	✔		
	197	25	A5	2		**SO terminal**	✔	✔		
Multi-speed setting	**232**	28	A8	2	**Multi-speed setting (speeds 8)**		✔	✔	6-48	
	233	29	A9	2	**Multi-speed setting (speeds 9)**		✔	✔		
	234	2A	AA	2	**Multi-speed setting (speeds 10)**		✔	✔		
	235	2B	AB	2	**Multi-speed setting (speeds 11)**		✔	✔		
	236	2C	AC	2	**Multi-speed setting (speeds 12)**		✔	✔		
	237	2D	AD	2	**Multi-speed setting (speeds 13)**		✔	✔		
	238	2E	AE	2	**Multi-speed setting (speeds 14)**		✔	✔		
	239	2F	AF	2	**Multi-speed setting (speeds 15)**		✔	✔		
—	**240**	30	B0	2	**Soft-PWM operation selection**		✔	✔	6-144	
—	**241**	31	B1	2	**Analog input display unit switch over**		✔	✔	6-153	
—	**244**	34	B4	2	**Cooling fan operation selection**		✔	✔	6-270	
Slip compensation	**245**	35	B5	2	**Rated slip**		✔	✔	6-32	
	246	36	B6	2	**Slip compensation time constant**		✔	✔		
	247	37	B7	2	**Constant-output region slip compensation selection**		✔	✔		
—	**249**	39	B9	2	**Earth (ground) fault detection at start**		✔	✔	6-142	
—	**250**	3A	BA	2	**Stop selection**		✔	✔	6-86 6-94	
—	**251**	3B	BB	2	**Output phase failure protection selection**		✔	✔	6-141	
Life check	**255**	3F	BF	2	**Life alarm status display**		✔	✔	6-271	
	256	40	C0	2	**Inrush current suppression circuit life display**		✔	✔		
	257	41	C1	2	**Control circuit capacitor life display**		✔	✔		
	258	42	C2	2	**Main circuit capacitor life display**		✔	✔		
	259	43	C3	2	**Main circuit capacitor life measuring**		✔	✔		
—	**260**	44	C4	2	**PWM frequency automatic switchover**		✔	✔	6-144	
Power failure stop	**261**	45	C5	2	**Power failure stop selection**		✔	✔	6-134	
—	**267**	4B	CB	2	**Terminal 4 input selection**		✔	✔	6-147	
—	**268**	4C	CC	2	**Monitor decimal digits selection**		✔	✔	6-111	
—	**269**	Parameter for manufacturer setting. Do not set.								

Tab. A-5: *Parameter list with instruction codes (5)*

Function	Para-meter	Instruction Code			Name	Control Mode-based Correspondence Table		Refer to Page	Customer Setting
		Read	Write	Extended		V/f Control	General-Purpose magnetic Flux Vector Control		
	295	67	E7	2	**Magnitude of frequency change setting**	✔	✔	6-284	
Password function	**296**	68	E8	2	**Password lock level**	✔	✔	6-169	
	297	69	E9	2	**Password lock/unlock**	✔	✔		
	298	6A	EA	2	**Frequency search gain**	✔	✔	6-123	
—	**299**	6B	EB	2	**Rotation direction detection selection at restarting**	✔	✔		
RS485 communication	**338**	26	A6	3	**Communication operation command source**	✔	✔	6-186	
	339	27	A7	3	**Communication speed command source**	✔	✔		
	340	28	A8	3	**Communication start-up mode selection**	✔	✔	6-184	
	342	2A	AA	3	**Communication E²PROM write selection**	✔	✔	6-198	
	343	2B	AB	3	**Communication error count**	✔	✔		
Second applied motor	**450**	32	B2	3	**Second applied motor**	✔	✔	6-72	
Remote output	**495**	5F	DF	4	**Remote output selection**	✔	✔	6-107	
	496	60	E0	4	**Remote output data 1**	✔	✔		
Communication	**502**	02	82	5	**Stop mode selection at communication error**	✔	✔	6-199 6-224	
Maintenance	**503**	03	83	5	**Maintenance timer**	✔	✔	6-276	
	504	04	84	5	**Maintenance timer alarm output set time**	✔	✔		
Communication	**549**	31	B1	5	**Protocol selection**	✔	✔	6-198	
	551	33	B3	5	**PU mode operation command source selection**	✔	✔	6-186	
Current average monitor	**555**	37	B7	5	**Current average time**	✔	✔	6-277	
	556	38	B8	5	**Data output mask time**	✔	✔		
	557	39	B9	5	**Current average value monitor signal output reference current**	✔	✔		
—	**561**	3D	BD	5	**PTC thermistor protection level**	✔	✔	6-66	
—	**563**	3F	BF	5	**Energizing time carrying-over times**	✔	✔	6-111	
—	**564**	40	C0	5	**Operating time carrying-over times**	✔	✔		
—	**571**	47	C7	5	**Holding time at a start**	✔	✔	6-62	
PID operation	**575**	4B	CB	5	**Output interruption detection time**	✔	✔	6-242	
	576	4C	CC	5	**Output interruption detection level**	✔	✔		
	577	4D	CD	5	**Output interruption cancel level**	✔	✔		
Traverse	**592**	5C	DC	5	**Traverse function selection**	✔	✔	6-264	
	593	5D	DD	5	**Maximum amplitude amount**	✔	✔		
	594	5E	DE	5	**Amplitude compensation amount during deceleration**	✔	✔		
	595	5F	DF	5	**Amplitude compensation amount during acceleration**	✔	✔		
	596	60	E0	5	**Amplitude acceleration time**	✔	✔		
	597	61	E1	5	**Amplitude deceleration time**	✔	✔		
—	**611**	0B	8B	6	**Acceleration time at a restart**	✔	✔	6-123	

Tab. A-5: *Parameter list with instruction codes (6)*

Function	Para-meter	Instruction Code			Name	Control Mode-based Correspondence Table		Refer to Page	Customer Setting
		Read	Write	Extended		V/f Control	General-Purpose magnetic Flux Vector Control		
Reduce mechanical resonance	**653**	35	B5	6	**Speed smoothing control**	✔	✔	6-146	
—	**665**	41	C1	6	**Regeneration avoidance frequency gain**	✔	✔	6-267	
Protective function	**872**	48	C8	8	**Input phase loss protection selection** ①	✔	✔	6-141	
Regeneration avoidance function	**882**	52	D2	8	**Regeneration avoidance operation selection**	✔	✔	6-267	
	883	53	D3	8	**Regeneration avoidance operation level**	✔	✔		
	885	55	D5	8	**Regeneration avoidance compensation frequency limit value**	✔	✔		
	886	56	D6	8	**Regeneration avoidance voltage gain**	✔	✔		
Free parameter	**888**	58	D8	8	**Free parameter 1**	✔	✔	6-281	
	889	59	D9	8	**Free parameter 2**	✔	✔		
Energy saving operation	**891**	5B	D8	8	**Cumulative power monitor digit shifted times**	✔	✔	6-111	
Calibration parameters	**C1 (901)**	5D	DD	1	**AM terminal calibration**	✔	✔	6-120	
	C2 (902)	5E	DE	1	**Terminal 2 frequency setting bias frequency**	✔	✔	6-153	
	C3 (902)	5E	DE	1	**Terminal 2 frequency setting bias**	✔	✔		
	125 (903)	5F	DF	1	**Terminal 2 frequency setting gain frequency**	✔	✔		
	C4 (903)	5F	DF	1	**Terminal 2 frequency setting gain**	✔	✔		
	C5 (904)	60	E0	1	**Terminal 4 frequency setting bias frequency**	✔	✔		
	C6 (904)	60	E0	1	**Terminal 4 frequency setting bias**	✔	✔		
	126 (905)	61	E1	1	**Terminal 4 frequency setting gain frequency**	✔	✔		
	C7 (905)	61	E1	1	**Terminal 4 frequency setting gain**	✔	✔		

Tab. A-5: *Parameter list with instruction codes (7)*

① Available only for the three-phase power input specification model.

Function	Para-meter	Instruction Code			Name	Control Mode-based Correspondence Table		Refer to Page	Customer Setting
		Read	Write	Extended		V/f Control	General-Purpose magnetic Flux Vector Control		
—	C22 – C25 (922 – 923)	Parameter for manufacturer setting. Do not set.							
PU	990	5A	DA	9	PU buzzer control	✔	✔	6-285	
	991	5B	DB	9	PU contrast adjustment	✔	✔	6-285	
Clear parameters	PR.CL	—	FC	—	Parameter clear	—	—	4-17	
	ALLC	—	FC	—	All parameter clear	—	—	4-17	
	Er.CL	—	F4	—	Faults history clear	—	—	7-19	
	PR.CH	—			Initial value change list	—	—	4-18	

Tab. A-5: *Parameter list with instruction codes (8)*

A.5 Specification change

A.5.1 SERIAL number check

Check the SERIAL number indicated on the inverter rating plate or package (refer to section 1.2).

The SERIAL consists of:

- 1 version symbol,
- 2 numeric characters or 1 numeric character and 1 alphabet letter indicating year and month Last digit of the production year is indicated as the Year, and the Month is indicated by 1 to 9, X (October), Y (November), and Z (December).
- 6 numeric characters indicating control number.

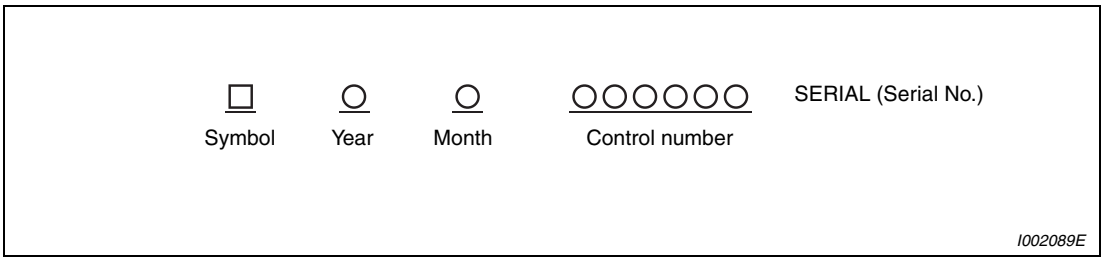

Fig. A-7: *Rating plate example*

MITSUBISHI ELECTRIC
MITSUBISHI ELECTRIC CORPORATION
NAGOYA WORKS
1-14 YADA-MINAMI 5-CHOME,
HIGASHI-KU, NAGOYA, 461-8670 JAPAN
Phone: +81-52-712-2111

DECLARATION OF CONFORMITY
(According to Low Voltage Directive 2006/95/EC)

We hereby state that the following AC inverters have been designed, and manufactured in accordance with the following standard, and conform to this standard upon implementation of our specific installation instructions and conditions.

Component Description: AC Inverter

Type:
FR-D720S-0.1K to 2.2K-**
FR-D720S-008 to 100-**
FR-D720S-008SC to 100SC-**
FR-D740-0.4K to 15K-**
FR-D740-012 to 295-**
FR-D740-012SC to 295SC-**
FR-D720-0.1K to 15K-**
FR-D720-008 to 580-**
FR-D710W-0.1K to 0.75K-**
FR-D710W-008 to 042-**
(Note **: The type name may be followed by any alphanumeric suffix.)

Manufactured by: MITSUBISHI ELECTRIC CORPORATION NAGOYA WORKS

Address: 5-1-14 Yada-Minami Higashi-ku, Nagoya 461-8670, Japan

Standard(s): EN61800-5-1:2007

The last two digit of the year in which the CE marking was affixed for Low Voltage Directive, is 08.

INVERTER SYSTEM DEPARTMENT
Manager / Shigemi Kuriyama

Issued by:
NAGOYA, 23/ July/ 2012

Authorized Representative:
In the European Community
Through Responsible person

Mitsubishi Electric Europe BV
Gothaer Strasse 8, D-40880
Ratingen, Germany

MITSUBISHI ELECTRIC EUROPE B.V.
Factory Automation - European Business Group
Gothaer Straße 8
40880 Ratingen / Germany
Tel.: +49 (0) 21 02 / 486-0 · Fax: 486-4069

Signature:

Date: 23/ July/ 2012

Executive Vice President / Hartmut Pütz

MITSUBISHI ELECTRIC
MITSUBISHI ELECTRIC CORPORATION
NAGOYA WORKS
1-14 YADA-MINAMI 5-CHOME,
HIGASHI-KU, NAGOYA, 461-8670 JAPAN
Phone: +81-52-712-2111

DECLARATION OF CONFORMITY
(According to EMC Directive 2004/108/EC)

We hereby state that the following AC inverters have been designed, and manufactured in accordance with the following Harmonized European Standards, and conform to these standards upon implementation of our specific installation instructions and conditions.

Component Description: AC Inverter

Type:
FR-D720S-0.1K to 2.2K-**
FR-D720S-008 to 100-**
FR-D720S-008SC to 100SC-**
FR-D740-0.4K to 15K-**
FR-D740-012 to 295-**
FR-D740-012SC to 295SC-**
FR-D720-0.1K to 15K-**
FR-D720-008 to 580-**
(Note **: The type name may be followed by any alphanumeric suffix.)

Manufactured by: MITSUBISHI ELECTRIC CORPORATION NAGOYA WORKS

Address: 5-1-14 Yada-Minami Higashi-ku, Nagoya 461-8670, Japan

Standard(s): EN61800-3:2004 (Second environment / PDS Category "C3")

INVERTER SYSTEM DEPARTMENT
Manager / Shigemi Kuriyama

Issued by:
NAGOYA, 23/ July/ 2012

Authorized Representative:
In the European Community
Through Responsible person

Mitsubishi Electric Europe BV
Gothaer Strasse 8, D-40880
Ratingen, Germany

MITSUBISHI ELECTRIC EUROPE B.V.
Factory Automation - European Business Group
Gothaer Straße 8
40880 Ratingen / Germany
Tel.: +49 (0)21 02 / 486-0 · Fax: 486-4069

Signature:

Date: 23/ July/ 2012

Executive Vice President / Hartmut Pütz

Index

A

AC reactor 3-43
Acceleration
  Characteristic 6-64
Acceleration and deceleration time
  Parameter 6-59
Accessory 1-3
Alarm output
  Terminals 3-15
Auto tuning 6-74
Automatic restart 6-123

B

Base frequency 6-44
Basic settings 5-1
Bias
  adjust 6-153
Buzzer
  control 6-285

C

Cables
  Size 3-8
Calibration
  Terminal AM 6-120
Case 1-2
Characteristic
  Acceleration/deceleration 6-64
  Load torque 6-46
Cleaning 8-6
Combined operation mode 6-178
Communication
  Basic settings 6-198
  Mitsubishi inverter protocol 6-205
  Modbus-RTU 6-224
  PU connector 6-193
Contactors and breakers 3-3
Contrast
  Parameter 6-285
Control codes 6-209
Cooling 2-10
Cooling fan
  Operation 6-270
  Reinstallation 8-8
  Removal 8-7
Cooling system 2-10
Cumulative power meter
  clear 6-111

D

Dancer control
  Parameter 6-255
DC injection brake
  Parameter 6-81
DC reactor 3-42
Detection of output frequency
  Setting 6-103
Digital dial
  Description 4-9
  Magnitude 6-284
Dimensions
  Inverter A-5
  Parameter unit FR-PA07 . . . . . A-10
  Parameter unit FR-PU07 . . . . . A-9
Display
  I/0 terminals 6-116
  Selection 6-111
  Speed 6-109

E

Earthing
  Leakage currents 3-10
Electromagnetic compatibility 3-44
Enclosure
  Cooling system 2-10
  Design 2-7
Energy saving operation 6-143
Environment specifications 2-7
Error
  Corrective action 7-4
  Diagnosis 7-1
  Display 7-4
  LED/LCD display 7-2
  List 7-2
  Message 7-2
  Troubleshooting 7-21
Extended parameter display 6-168

F

Fault history
clear 7-19
read 7-19
Frequency jump
Parameter 6-42
Frequency monitor
Reference 6-118
Frequency setting
Digital dial 5-24
Front cover
Reinstallation 2-1
Removal 2-1

G

Gain
adjust 6-153

I

Input terminals
Function selection 6-88
Inspection 8-1
Installation
Enclosure 2-6
Instruction codes A-11
Insulation resistance test 8-10

J

Jog operation
Parameter 6-51

L

Language
Selection 6-282
Language selection
Parameter 6-282
Leakage currents 3-44
Life
Monitor 6-271
Load pattern
Selection 6-46
Logic
Sink logic 3-27
Source logic 3-27

M

Maintenance 8-1
Maintenance timer
Parameter 6-276
Mitsubishi inverter protocol 6-205
Modbus-RTU 6-224
Motor
Selection 6-72
Motor protection
Parameter 6-66
Multi-speed setting
Parameter 6-48

O

Operation hour meter
clear 6-111
Operation mode
at power on 6-184
combined 6-178
Communication 6-188
external operation 6-176
PU operation mode 6-177
Operation mode selection
Flow chart 6-175
Parameter 6-172
Operation panel
Basic operation 4-10
Functions 4-8
Output
analog 6-118
Output current
Detection 6-105
Output frequency
Detection 6-104
Frequency jumps 6-42
Jog operation 6-51
maximum 6-40
minimum 6-40
Multi-speed setting 6-48
Starting frequency 6-62
Output terminals
Function selection 6-98

P

Parameter
- clear 4-17
- extended parameter display 6-168
- free 6-281
- Instruction codes A-11
- Overview 6-1
- set 4-16
- Simple mode parameters 5-1

Parameter unit
- Wiring 3-30

Parameter write disable 6-165
PID control
- Parameter 6-242

PLC
- Connection 3-29

Power failure
- Automatic restart 6-123

Protective earth
- Wiring 3-6

Protective functions
- Overview A-4
- Reset 7-17

R

Reactor 3-43
Regeneration avoidance
- Parameter 6-267

Remote outputs
- Parameter 6-107

Remote setting function
- Parameter 6-55

Reset 7-17
Resonance points
- Avoidance 6-42

Restart
- at alarm occurence 6-138
- at power failure 6-125

Reverse rotation prevention
- Parameter 6-167

S

Safety stop function 3-22
Second functions
- Setting 6-93

Set value
- adjust 6-153
- analog 6-147
- Bias 6-157
- Filter 6-152
- Gain 6-157

Specifications A-1
Speed display
- Parameter 6-109

Stall prevention
- Parameter 6-33

Stall prevention operation 6-33
Start signal
- Assignment 6-94

Starting frequency
- DC injection brake 6-81
- Parameter 6-62

Starting the inverter 4-7
Station number 6-198
Switch
- Voltage/current 6-148

T

Terminal
- Control circuit 3-13

Terminals
- Communication 3-15
- Function assignment 6-88

Torque
- Boost 6-26
- Parameter 6-26

Traverse function 6-264

U

Up-to-frequency sensivity
- Parameter 6-103

V

V/f pattern
- Parameter 6-44

W

Wiring
- Control circuit 3-13
- DC reactor 3-42
- External brake unit 3-37
- High power factor converter 3-40
- Magnetic contactor 3-32
- Main circuit 3-6
- Parameter unit 3-30
- Power regeneration common converter . . . 3-41
- Reactor 3-43
- Stand-alone option units 3-32
- System configuration 3-1
- Terminal connection diagram 3-4

Z

Zero current
- Detection 6-106

MITSUBISHI ELECTRIC

HEADQUARTERS

MITSUBISHI ELECTRIC EUROPE B.V. **EUROPE**
German Branch
Gothaer Straße 8
D-40880 Ratingen
Phone: +49 (0)2102 / 486-0
Fax: +49 (0)2102 / 486-1120

MITSUBISHI ELECTRIC EUROPE B.V.-org.sl. **CZECH REP.**
Czech Branch
Avenir Business Park, Radlická 714/113a
CZ-158 00 Praha 5
Phone: +420 - 251 551 470
Fax: +420 - 251-551-471

MITSUBISHI ELECTRIC EUROPE B.V. **FRANCE**
French Branch
25, Boulevard des Bouvets
F-92741 Nanterre Cedex
Phone: +33 (0)1 / 55 68 55 68
Fax: +33 (0)1 / 55 68 57 57

MITSUBISHI ELECTRIC EUROPE B.V. **IRELAND**
Irish Branch
Westgate Business Park, Ballymount
IRL-Dublin 24
Phone: +353 (0)1 4198800
Fax: +353 (0)1 4198890

MITSUBISHI ELECTRIC EUROPE B.V. **ITALY**
Italian Branch
Viale Colleoni 7
I-20041 Agrate Brianza (MB)
Phone: +39 039 / 60 53 1
Fax: +39 039 / 60 53 312

MITSUBISHI ELECTRIC EUROPE B.V. **POLAND**
Poland Branch
Krakowska 50
PL-32-083 Balice
Phone: +48 (0)12 / 630 47 00
Fax: +48 (0)12 / 630 47 01

MITSUBISHI ELECTRIC EUROPE B.V. **RUSSIA**
52, bld. 3 Kosmodamianskaya nab 8 floor
RU-115054 Moscow
Phone: +7 495 721-2070
Fax: +7 495 721-2071

MITSUBISHI ELECTRIC EUROPE B.V. **SPAIN**
Spanish Branch
Carretera de Rubí 76-80
E-08190 Sant Cugat del Vallés (Barcelona)
Phone: 902 131121 // +34 935653131
Fax: +34 935891579

MITSUBISHI ELECTRIC EUROPE B.V. **UK**
UK Branch
Travellers Lane
UK-Hatfield, Herts. AL10 8XB
Phone: +44 (0)1707 / 27 61 00
Fax: +44 (0)1707 / 27 86 95

MITSUBISHI ELECTRIC CORPORATION **JAPAN**
Office Tower "Z" 14 F
8-12,1 chome, Harumi Chuo-Ku
Tokyo 104-6212
Phone: +81 3 622 160 60
Fax: +81 3 622 160 75

MITSUBISHI ELECTRIC AUTOMATION, Inc. **USA**
500 Corporate Woods Parkway
Vernon Hills, IL 60061
Phone: +1 847 478 21 00
Fax: +1 847 478 22 53

EUROPEAN REPRESENTATIVES

GEVA **AUSTRIA**
Wiener Straße 89
AT-2500 Baden
Phone: +43 (0)2252 / 85 55 20
Fax: +43 (0)2252 / 488 60

TECHNIKON **BELARUS**
Oktyabrskaya 19, Off. 705
BY-220030 Minsk
Phone: +375 (0)17 / 210 46 26
Fax: +375 (0)17 / 210 46 26

ESCO DRIVES & AUTOMATION **BELGIUM**
Culliganlaan 3
BE-1831 Diegem
Phone: +32 (0)2 / 717 64 30
Fax: +32 (0)2 / 717 64 31

Koning & Hartman b.v. **BELGIUM**
Woluwelaan 31
BE-1800 Vilvoorde
Phone: +32 (0)2 / 257 02 40
Fax: +32 (0)2 / 257 02 49

INEA RBT d.o.o. **BOSNIA AND HERZEGOVINA**
Aleja Lipa 56
BA-71000 Sarajevo
Phone: +387 (0)33 / 921 164
Fax: +387 (0)33 / 524 539

AKHNATON **BULGARIA**
4, Andrei Ljapchev Blvd., PO Box 21
BG-1756 Sofia
Phone: +359 (0)2 / 817 6000
Fax: +359 (0)2 / 97 44 06 1

INEA RBT d.o.o. **CROATIA**
Losinjska 4 a
HR-10000 Zagreb
Phone: +385 (0)1 / 36 940 - 01/ -02/ -03
Fax: +385 (0)1 / 36 940 - 03

AutoCont C.S. s.r.o. **CZECH REPUBLIC**
Technologická 374/6
CZ-708 00 Ostrava-Pustkovec
Phone: +420 595 691 150
Fax: +420 595 691 199

Beijer Electronics A/S **DENMARK**
Lykkegårdsvej 17
DK-4000 Roskilde
Phone: +45 (0)46/ 75 76 66
Fax: +45 (0)46 / 75 56 26

Beijer Electronics Eesti OÜ **ESTONIA**
Pärnu mnt.160i
EE-11317 Tallinn
Phone: +372 (0)6 / 51 81 40
Fax: +372 (0)6 / 51 81 49

Beijer Electronics OY **FINLAND**
Peltoie 37
FIN-28400 Ulvila
Phone: +358 (0)207 / 463 540
Fax: +358 (0)207 / 463 541

UTECO **GREECE**
5, Mavrogenous Str.
GR-18542 Piraeus
Phone: +30 211 / 1206 900
Fax: +30 211 / 1206 999

MELTRADE Kft. **HUNGARY**
Fertő utca 14.
HU-1107 Budapest
Phone: +36 (0)1 / 431-9726
Fax: +36 (0)1 / 431-9727

Beijer Electronics SIA **LATVIA**
Ritausmas iela 23
LV-1058 Riga
Phone: +371 (0)784 / 2280
Fax: +371 (0)784 / 2281

Beijer Electronics UAB **LITHUANIA**
Savanoriu Pr. 187
LT-02300 Vilnius
Phone: +370 (0)5 / 232 3101
Fax: +370 (0)5 / 232 2980

EUROPEAN REPRESENTATIVES

ALFATRADE Ltd. **MALTA**
99, Paola Hill
Malta- Paola PLA 1702
Phone: +356 (0)21 / 697 816
Fax: +356 (0)21 / 697 817

INTEHSIS srl **MOLDOVA**
bld. Traian 23/1
MD-2060 Kishinev
Phone: +373 (0)22 / 66 4242
Fax: +373 (0)22 / 66 4280

HIFLEX AUTOM.TECHNIEK B.V. **NETHERLANDS**
Wolweverstraat 22
NL-2984 CD Ridderkerk
Phone: +31 (0)180 – 46 60 04
Fax: +31 (0)180 – 44 23 55

Koning & Hartman b.v. **NETHERLANDS**
Haarlerbergweg 21-23
NL-1101 CH Amsterdam
Phone: +31 (0)20 / 587 76 00
Fax: +31 (0)20 / 587 76 05

Beijer Electronics AS **NORWAY**
Postboks 487
NO-3002 Drammen
Phone: +47 (0)32 / 24 30 00
Fax: +47 (0)32 / 84 85 77

Fonseca S.A. **PORTUGAL**
R. João Francisco do Casal 87/89
PT - 3801-997 Aveiro, Esgueira
Phone: +351 (0)234 / 303 900
Fax: +351 (0)234 / 303 910

Sirius Trading & Services srl **ROMANIA**
Aleea Lacul Morii Nr. 3
RO-060841 Bucuresti, Sector 6
Phone: +40 (0)21 / 430 40 06
Fax: +40 (0)21 / 430 40 02

INEA RBT d.o.o. **SERBIA**
Izletnicka 10
SER-113000 Smederevo
Phone: +381 (0)26 / 615 401
Fax: +381 (0)26 / 615 401

SIMAP s.r.o. **SLOVAKIA**
Jána Derku 1671
SK-911 01 Trencín
Phone: +421 (0)32 743 04 72
Fax: +421 (0)32 743 75 20

PROCONT, spol. s r.o. Prešov **SLOVAKIA**
Kúpelná 1/A
SK-080 01 Prešov
Phone: +421 (0)51 7580 611
Fax: +421 (0)51 7580 650

INEA RBT d.o.o. **SLOVENIA**
Stegne 11
SI-1000 Ljubljana
Phone: +386 (0)1 / 513 8116
Fax: +386 (0)1 / 513 8170

Beijer Electronics AB **SWEDEN**
Box 426
SE-20124 Malmö
Phone: +46 (0)40 / 35 86 00
Fax: +46 (0)40 / 93 23 01

Omni Ray AG **SWITZERLAND**
Im Schörli 5
CH-8600 Dübendorf
Phone: +41 (0)44 / 802 28 80
Fax: +41 (0)44 / 802 28 28

GTS **TURKEY**
Bayraktar Bulvari Nutuk Sok. No:5
TR-34775 Yukarı Dudullu-Ümraniye-İSTANBUL
Phone: +90 (0)216 526 39 90
Fax: +90 (0)216 526 3995

CSC Automation Ltd. **UKRAINE**
4-B, M. Raskovoyi St.
UA-02660 Kiev
Phone: +380 (0)44 / 494 33 55
Fax: +380 (0)44 / 494-33-66

EURASIAN REPRESENTATIVES

TOO Kazpromavtomatika **KAZAKHSTAN**
Ul. Zhambyla 28
KAZ-100017 Karaganda
Phone: +7 7212 / 50 10 00
Fax: +7 7212 / 50 11 50

MIDDLE EAST REPRESENTATIVE

I.C. SYSTEMS LTD. **EGYPT**
23 Al-Saad-Al-Alee St.
EG-Sarayat, Maadi, Cairo
Phone: +20 (0) 2 / 235 98 548
Fax: +20 (0) 2 / 235 96 625

SHERF Motion Techn. Ltd. **ISRAEL**
Rehov Hamerkava 19
IL-58851 Holon
Phone: +972 (0)3 / 559 54 62
Fax: +972 (0)3 / 556 01 82

CEG INTERNATIONAL **LEBANON**
Cebaco Center/Block A Autostrade DORA
Lebanon - Beirut
Phone: +961 (0)1 / 240 430
Fax: +961 (0)1 / 240 438

AFRICAN REPRESENTATIVE

CBI Ltd. **SOUTH AFRICA**
Private Bag 2016
ZA-1600 Isando
Phone: + 27 (0)11 / 977 0770
Fax: + 27 (0)11 / 977 0761