Thank you for purchasing S100 Series CANopen Communication Option Module.

SAFETY PRECAUTIONS

- Always follow safety instructions to prevent accidents and potential hazards from occurring.
- Safety precautions are classified into “WARNING” and “CAUTION” and their meanings are as follows:

⚠ **WARNING** Improper operation may result in serious personal injury or death.

⚠ **CAUTION** Improper operation may result in slight to medium personal injury or property damage

- The indicated illustrations on the product and in the manual have the following meanings.

⚠ Danger may be present. Read the message and follow the instructions carefully.

⚠ Particular attention should be paid because danger of an electric shock may be present.

- Keep operating instructions handy for quick reference.
- Read the operating instructions carefully to fully understand the functions of the S100 series and to use it properly.

⚠ CAUTION

- **Be cautious, when handling the CMOS components of the communication module.**
  Static may lead to malfunctioning of the product.
- **Turn off the inverter power, when changing the communication cable.**
  Otherwise, you may damage the module or a communication error may occur.
- **Make sure to insert the Communication module connector to the inverter precisely.**
  Otherwise, you may damage the module or a communication error may occur.
- **Check the parameter unit before setting up the parameter.**
  Otherwise, a communication error may occur.

Table of Contents

Chapter 1. Introduction 1
1.1 What is CANopen? 1
1.2 What are the Benefits of Using the CANopen Option Board? 1
1.3 Components 1
Chapter 2. CANopen Communication Option 2
2.1 Technical Data of CANopen Communication Module 2
2.2 Layout of CANopen Communication Module 3
2.3 Installation of CANopen Communication Module 4
2.4 Connection of connector for CANopen signal line 6
2.5 Hardware installation 7
2.6 Maximum Communication Range according to Baud Rate 10
Chapter 3. Diagnosis of the Option Statuses and LED Definition 11
3.1 Definition of the LED Signal 11
3.2 Diagnosis of Option by LED Signal 11
Chapter 4. Data Communication Protocol of the CANopen 15
4.1 Communication Protocol of the CANopen 15
4.1.1 CAN-ID 15
4.1.2 SDO communication 16
4.1.3 PDO communication 16
4.2 NMT (Network Management) State Machine 18
4.2.1 NMT state initialization 19
4.2.2 NMT state Pre-operational 20
4.2.3 NMT state operational 20
4.2.4 NMT state stopped 20
4.2.5 The frames enabling communication by NMT status 21
4.3 Error Control Protocols 21
4.3.1 Protocol node/life guarding 21
4.3.2 Protocol heartbeat 22
4.3.3 CANopen EDS File 22
Chapter 5. Detailed Specification of Communication Profile Specific Objects 23
5.1 Device Type 23
5.2 Error Register 23
5.3 Pre-defined Error Field 24
5.4 COB-ID SYNC Message 25
5.5 Manufacturer Device Name 26
5.6 Manufacturer Hardware Version 26
5.7 Manufacturer Software Version 26
5.8 Guard Time 27

5.9 Life Time Factor 27
5.10 COB-ID EMCY 27
5.11 Producer Heartbeat Time 28
Chapter 6. Profile 29
6.1 CiA 402 Drive and Motion Control Device Profile 29
6.1.1 Finite state automation 29
6.1.2 CiA 402 SDO 31
6.1.3 SDO for S100 38
6.2 PDO 41
6.2.1 RPDO 41
6.2.2 RPDO mapping 42
6.2.3 TPDO 42
6.2.4 TPDO mapping 43
Chapter 7. Inverter Parameter 44
7.1 Related Parameter List 44
7.2 Description on the Basic Field Bus Parameters 46
7.2.1 Set operation command source of the inverter - Cmd Source(drv) 46
7.2.2 Set frequency command source of the inverter - Freq Ref Src(Frq) 46
7.2.3 Set Station ID - Fbus ID(CM-07) 46
7.2.4 Display communication state LED State - Fbus Led(CM-9) 47
7.2.5 Comm Update (CM-94) 47
7.2.6 Set baudrate - Opt Parameter1 (CM-10) 47
7.2.7 Set Profile - Opt Parameter2 (CM-11) 48
7.2.8 Display communication version state - Fbus S/W ver (CM-06) 49
7.3 Parameter Setting for the Periodic Communication 49
7.3.1 Set LS Profile Output Address - Para Status 1~4 (CM-31~34) 49
7.3.2 Set LS Profile Input Address - Para Status 1~4 (CM-51~54) 49
7.4 Parameter setting for the Lost Command 49
7.4.1 How to run at communication command loss - Lost Cmd Mode (Pr-12) 50
7.4.2 Communication command loss determination time - Lost Cmd Time (Pr-13) 51

Chapter 1. Introduction

1.1 What is CANopen?

The CANopen is a Fieldbus using the CAN (Controller Area Network) specified by the CiA (CAN in Automation) Association. Currently, the CANopen is used in machine control, medical equipment, autos, and building automation.

1.2 What are the Benefits of Using the CANopen Option Board?

Inverters can be monitored and controlled by PLC sequence program or any master module.
Multiple inverters can be connected with a single communication line, saving the installation cost. Simple and clean wiring makes installation and maintenance works much easier and faster.
Various peripheral devices of PLC can be used to control inverters. Various systems including PCs can be linked for plant automation.

1.3 Components

The option board is composed with following components;

-. CANopen Communication Module: 1 ea
-. CANopen User Manual: 1 ea
-. Brass Bar (M3xL23): 1 ea
-. Brass Bar (M3xL17.3): 1 ea
-. Screw (M3xL8): 2 ea

Chapter 2. CANopen Communication Option

2.1 Technical Data of CANopen Communication Module

Items		Description
Power Supply	Power supply of CANopen communication Module	Supplied from inverter.
Network Topology		Bus Topology
Communication BaudRate		20kbps, 50kbps, 100kbps, 125kbps, 250kbps, 500kbps, 800kbps, 1Mkbps
Max. number of Node		64 ea (Including Master) With 1 Master connected to network, the maximum number of inverter nodes is 63 (64-1).
Device Type		AC Drive
Supported Communication Type		Process Data Object (PDO), Service Data Object (SDO), Synchronization (Sync), Network Management (NMT)
Terminal Resistance		120 ohm 1/4W (Built-in)
Available PDO		PDO1 (CiA 402 Drive and Motion Control device profile) PDO3 (LS Profile)
Vender Name		0x7D (LSIS)
PDO Mapping		N/A
Group Messaging		N/A
LSS Supported		N/A

AKSA OTOMASYON

2.2 Layout of CANopen Communication Module

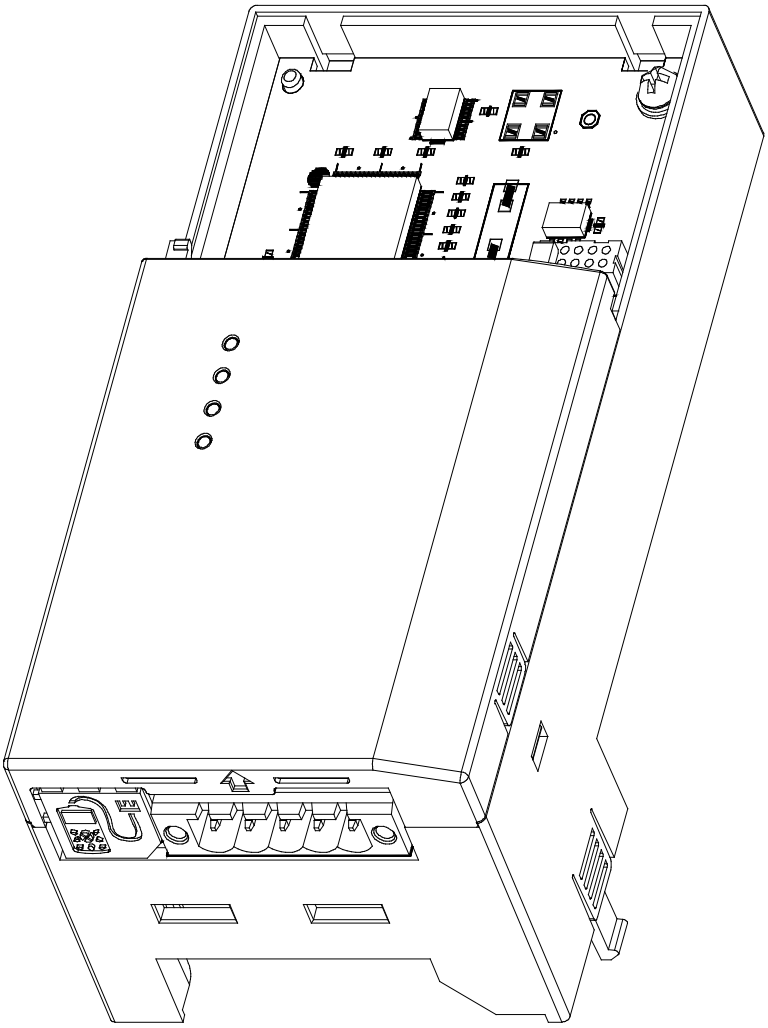

2.3 Installation of CANopen Communication Module

Warning) Connect a communication network after the power supply of the S100 inverter must be off.
If the power supply is plugged when CANopen communication module is removed, the S100 inverter will be damaged entirely.
Take off CANopen communication module from the product after the power supply is totally discharged.

■ Take off the power supply cover and the I/O cover((1), (2)) from a dedicated S100 inverter for communication.

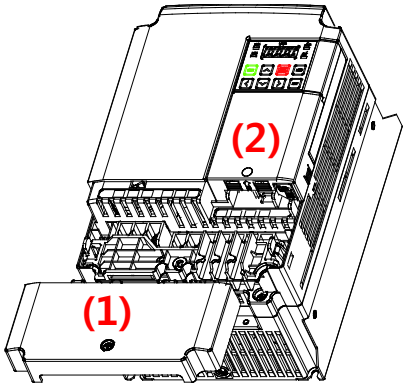

■ Take off the keypad (3).

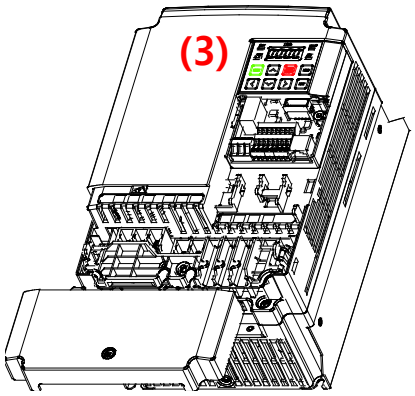

■ Loosen a screw from the I/O board and fasten the prepared brass bar(4).

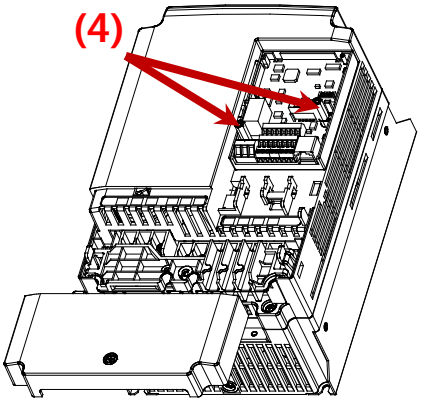

AKSA OTOMASYON

■ Mount CANopen communication Module and fasten the removed screw(6) and the included screw(7).

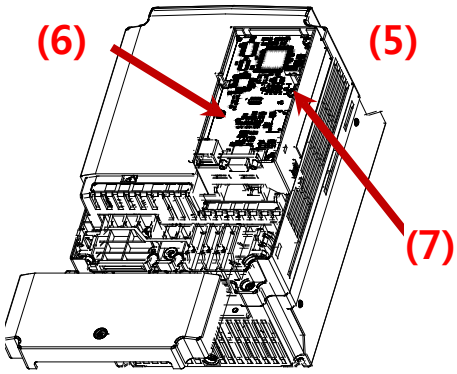

■ Install the keypad (8) at first and the communication module cover(9) in order.

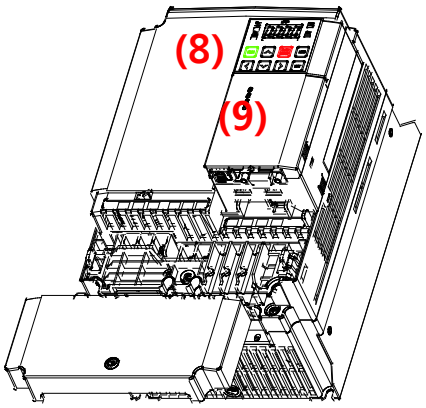

■ Install the power supply cover(10) again And the installation is completed.

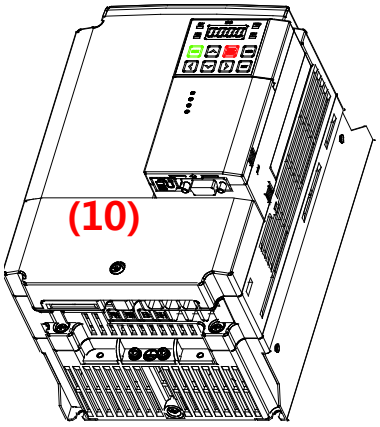

2.4 Connection of connector for CANopen signal line

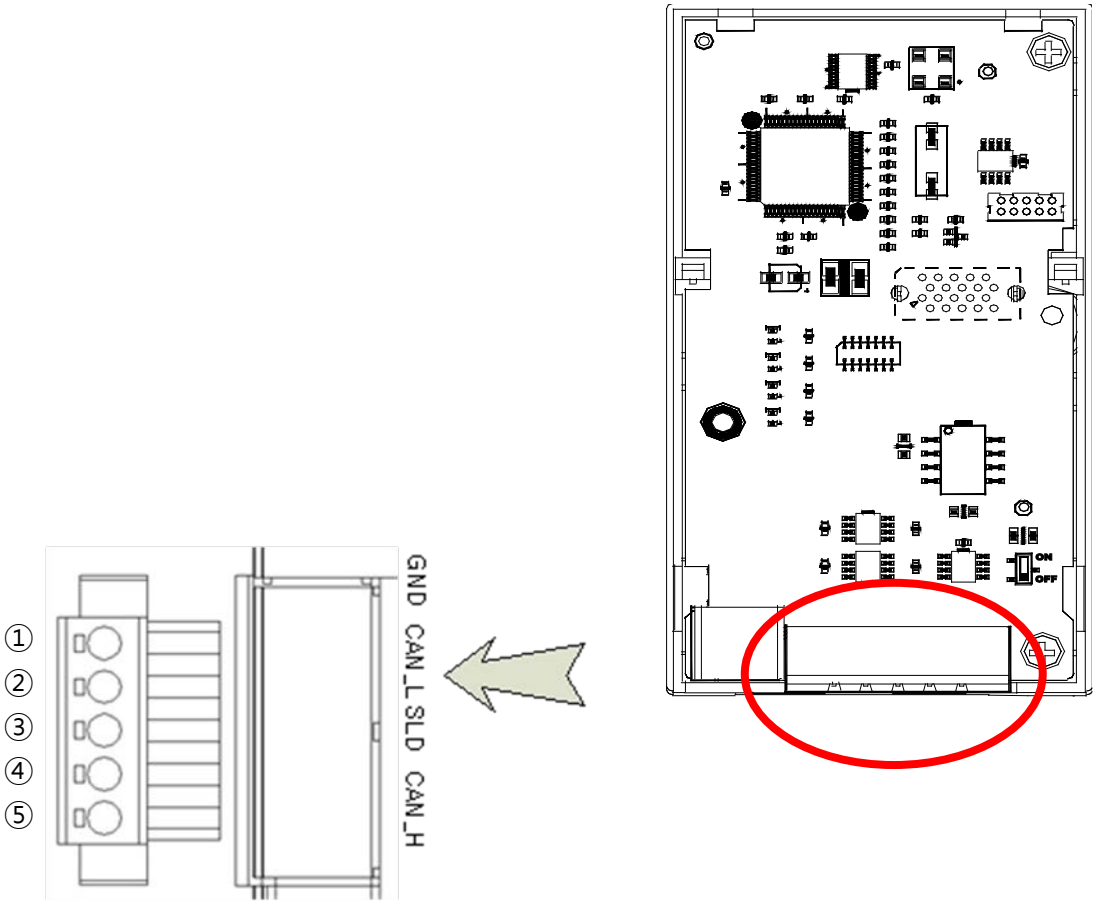

No	Signal	Description
1	GND	CAN Ground
2	CAN_L	CAN_L Bus Line (Dominant Low)
3	SLD	CAN Shield
4	CAN_H	CAN_H Bus Line (Dominant High)
5	-	Reserved

※ The PHOENIX STLZ950/5F-5.08-H-GREEN is recommended for the 5 pin connector.

2.5 Hardware installation

Warning) Configure the communication network after turning off the power of inverter.

Both the inverter and the option card will be damaged when the option card is removed or installed while the inverter is switched on. Please remove or install the option card after the charged voltage of condenser is totally discharged.

To reduce the noise, CANopen communication module at both ends of the network has to be terminated. Turn on the setting switch of terminal resistor on CANopen communication module. Terminal resistance 120 Ω 1/4W is connected between CAN_L and CAN_H after the terminal resistance is switched on.

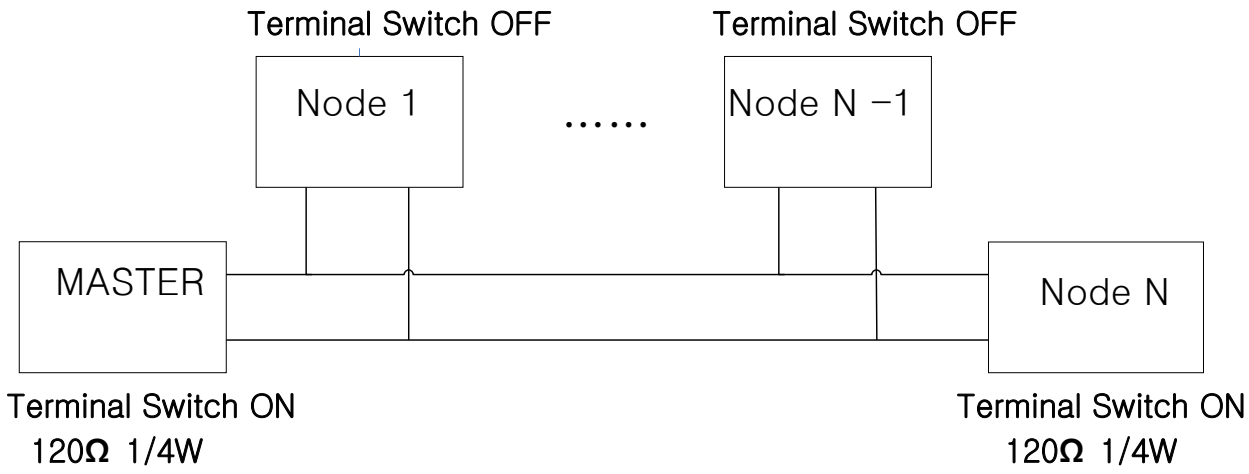

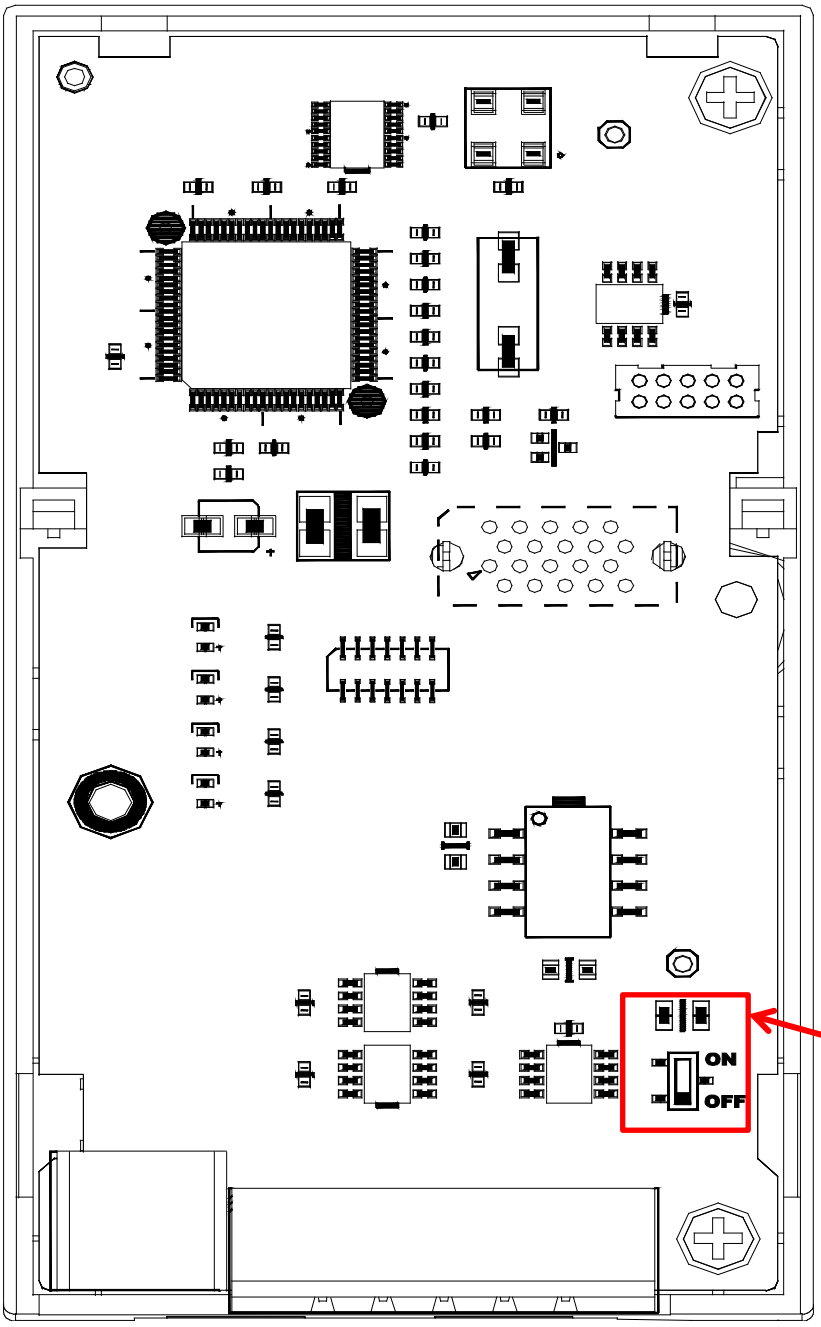

Terminating resistor
Selection Switch

When the switch of terminal resistance is placed in lower side (Off)
→ Terminal resistor is not available.

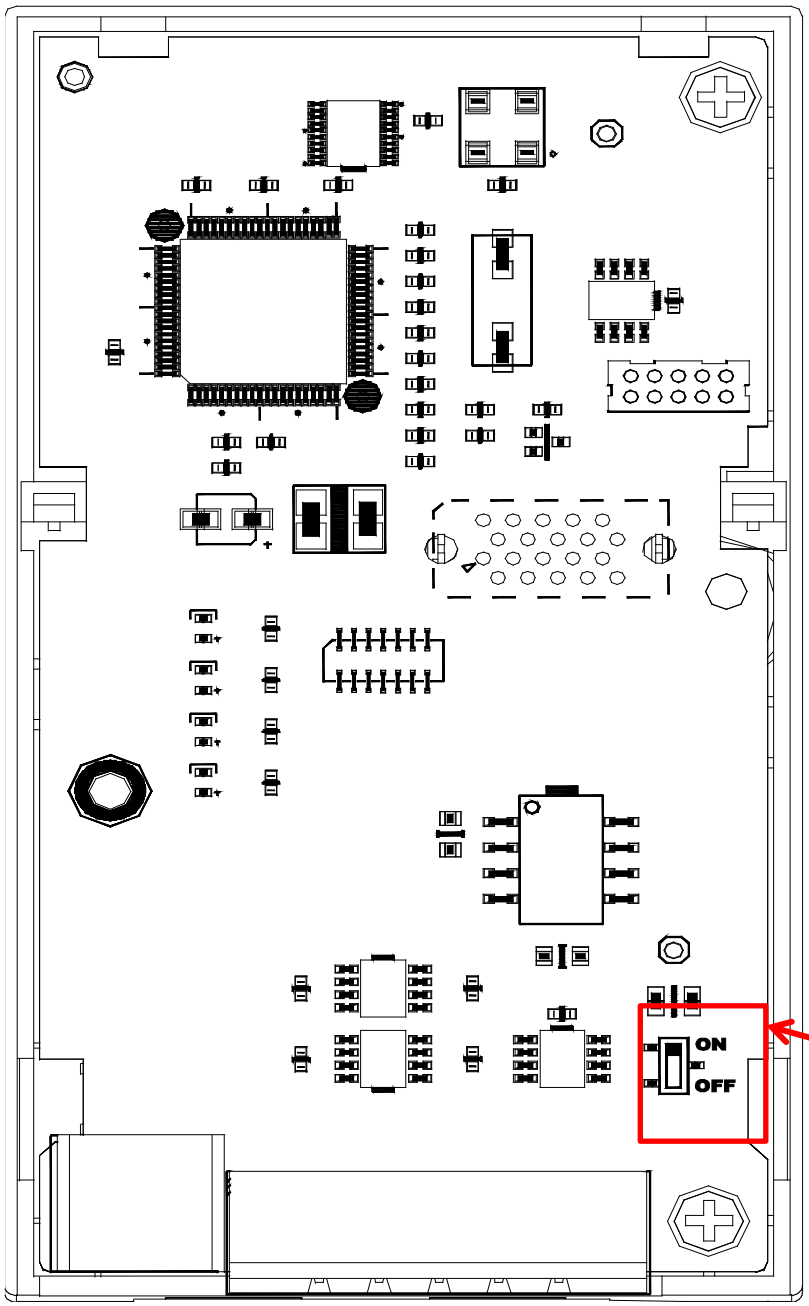

Terminating resistor
Selection Switch

When the switch of terminal resistance is placed in upper side (Off)
→ Terminal resistor is available.

2.6 Maximum Communication Range according to Baud Rate

In a network system, the total length of the network line is determined by the baud rate. The performance of the communication farther than this distance is not guaranteed.

The table below presents the guaranteed communication distance when using 18AWG DeviceNet cable(Thick cable).

Baud Rate	Bus Length	Remark
1M bps	25 m	-
800 kbps	50 m	-
500 kbps	100 m	-
250 kbps	250 m	-
125 kbps	500 m	-
100 kbps	700 m	-
50 kbps	1,000 m	-
20 kbps	2,500 m	-

Note) S100 CANopen communication card does not support 10 kbps.

The recommended cable : AC parameters : 120-Ω impedance
5-ns/m specific line delay
18AWG Cable(Thick Cable)

AKSA OTOMASYON

Chapter 3. Diagnosis of the Option Statuses and LED Definition

3.1 Definition of the LED Signal

The CANopen communication option has 4 LEDs.

LED	Color	Description
CPU	Green	When the Option Module is energized and the CPU is in normal operation state, this LED is turned on and off at 1 second cycle – on for 500 ms and off for 500 ms.
ERR	Red	This LED turns on if the Option parameters have been set up inappropriately, or the Internal CAN communication between the inverter and the CANopen is lost.
NODE	Green	This LED turns on according to the status of the current NMT (Network Management).
BUS	Green	This LED turns on or off if speed setting and profile setting are different from the values set by Master.

3.2 Diagnosis of Option by LED Signal

LED	LED Signal	Option Status	Possible Cause	Action
CPU	Kept OFF	No Power	Failure in power supply (5V) to the CANopen communication Module	Check inverter power supply. Check power supply to the CANopen communication Module
	Blink at 1 sec intervals	On Power	5V power supplied	Normal status
ERR	Kept OFF	No Error	Normal Option setting	Normal status

LED	LED Signal	Option Status	Possible Cause	Action
	Blink synchronously with the CPU LED	communication Error	Data communication between the inverter and Option is lost.	Turn the inverter power off, reinstall the Option Module and then turn the power on again.
	Blink asynchronously with the CPU LED	MAC ID Setting Error	‘0’ is entered as the ID of the CM-7 FBus	Enter a figure between 1~127 except zero, into the FBus ID, and) set CM-94 COMM Update to1(Yes)
	Blink at an interval twice later than that of the CPU LED.	Opt Parameter Setting	The parameters for the CANopen entered using keypad differ from those set up in the CANopen option Module.	Run CM-94 Update to apply the CANopen parameter set up with keyboard. To maintain the CANopen parameters, set up with the previous values, or turn off and on the inverter power supply. Though the ERR LED may blink, the CANopen is driven with the previous set up values.
NODE	Kept OFF	CANopen Not Initial	If the NODE LED has not been	In case LED doesn’t light up,

AKSA OTOMASYON

LED	LED Signal	Option Status	Possible Cause	Action
			turned on yet after the CANopen Option has been energized, the CANopen has not been initialized yet. So it is not ready for CANopen communication.	set the COMM Update of the CM-94 to 1(Yes)
	Kept OFF	CANopen Stopped	If the NODE LED has been lit at least once, the CANopen Master has issued a Stopped command.	Normal status.
	Blinks synchronously with the CPU LED	CANopen Pre-Operational	CANopen communication is available with the master, but the connection with the Master has not been made yet.	Normal status.
	Kept ON	CANopen Operational	Master has been connected and communicating with the CANopen normally.	Normal status.
BUS	Kept OFF	Bus Off	CANopen Option is isolated from	Check the connection with

LED	LED Signal	Option Status	Possible Cause	Action
			the network due to Problem in the network.	the Network Line. Check tightness of bolts and nuts. Turn the power on and off.
	Blinks synchronously with the CPU LED	CANopen Profile Setting Error	The profile set up on the CANopen Master differs from that set up in the Option.	Check that the PDOs set up in the Master and Option are identical.
	Blinks at an interval twice as long as that of the CPU LED	PDO Communication Not Connected	CANopen's communication speed is different.	Check that the baud rate of the CANopen set up in the Master and that in the Communication Module are identical.
			Master has not been connected for communication yet.	Check that the Master has started communication.
			Network line has not been connected yet.	Check that Network Line has been connected.
	Kept ON	CANopen Network Bus No Error	No problem in the CANopen Network.	Normal status.

AKSA OTOMASYON

Chapter 4. Data Communication Protocol of the CANopen

4.1 Communication Protocol of the CANopen

4.1.1 CAN-ID

In the S100 CANopen, only CAN2.0A (Standard) is supported.
As the CAN2.0A is implemented, the ID is composed of 11Bits.
The figure below shows the configuration of the ID.

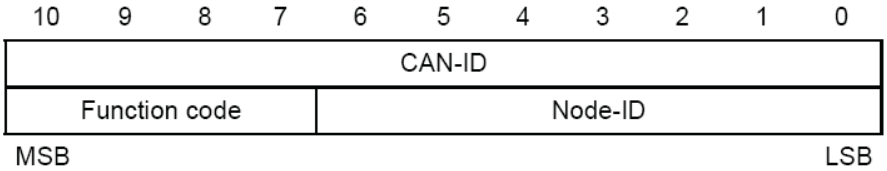

The table below presents the Broadcast Function code.

COB	Function code	Resulting CAN-IDs
NMT	0000b	0 (0x000)
SYNC	0001b	128 (0x080)
TIME	0010b	256 (0x100)

Note) As COB - Communication Object, it is an integral part of CAN Message Frame showing the unit transmitted by CAN Network.

The table below presents the function code for peer to peer.

COB	Function code	Resulting CAN-IDs
EMCY	0001b	129(0x81)~255(0xFF)
PDO1 (tx)	0011b	385(0x181)~511(0x1FF)
PDO1 (rx)	0100b	513(0x201)~639(0x27F)
PDO3 (tx)	0111b	897(0x381)~1023(0x3FF)
PDO3 (tx)	1000b	1025(0x401)~1151(0x47F)
SDO (tx)	1011b	1409(0x581)~1535(0x5FF)
SDO (rx)	1100b	1537(0x601)~1663(0x67F)

Data is transmitted through a variety of COBs (Communication Object) in

the CANopen data Frame.
Process Data Object (PDO) is used to transmit the data requiring real time transmission (Real time data), while Service Data Object (SDO) is used to transmit the data not requiring real time transmission.

4.1.2 SDO communication

SDO communication is used for Peer to Peer communication of the data not requiring real time transmission between two CANopen Devices (ex; setting the parameter value).
It is possible to read/write all the Objects in the Object Directory using SDO communication and access the Object with the combination of Object Index and Sub-Index.

4.1.3 PDO communication

PDO communication is used to send and receive the data requiring real time transmission (Real Time data). It is transmitted without overhead or confirmation of the Protocol (Index, Sub-index, Data). i.e. it is used for IO communication.
PDO is divided into two types depending on the transmission direction; RPDO (Receive PDO) which receives data from communication Master and TPDO (Transmit PDO) which transmits data to communication Master.
S100 CANopen is embodied about PDO for Frequency converter use out of CiA 402 Drive and Motion Control, which is provided to PDO1 and PDO3 only.
Using PDO1 with PDO3 is not possible at the same time.

AKSA OTOMASYON

▶ PDO Transmission Modes

- **Synchronous transmission**
  Transmits PDO by SYNC frames. Interval between two SYNC Objects becomes the interval of communication.
- **Asynchronous (Event-driven) transmission**
  transmits PDO by specific Event.

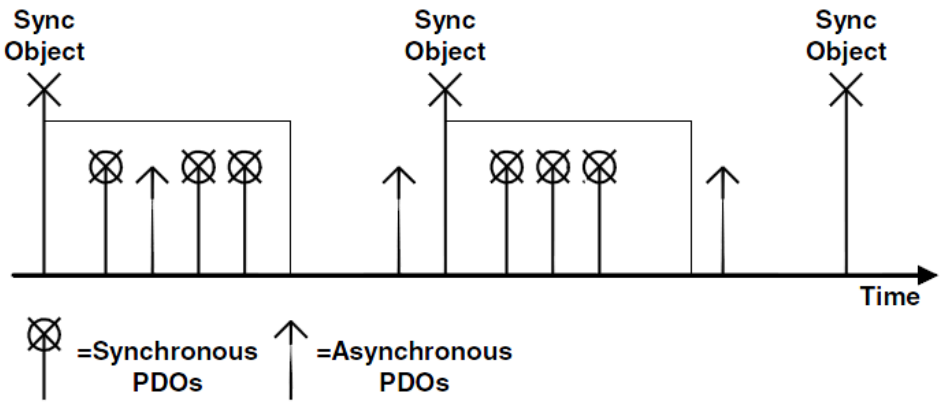

Synchronous and Asynchronous Transmission

▶ Triggering modes

It is Event which determines when it transmits TPDO. There are three kinds of Triggering modes.

- **Event- and timer-driven**
  When the preset event time is elapsed, the PDO frame is transmitted automatically.
- **Remotely requested**
  PDO frame is transmitted when the RTR frame requesting PDO is received.
- **Synchronously triggered**
  When SYNC frame as much as the preset number of SYNC frame is received, TPDO is transmitted.

4.2 NMT (Network Management) State Machine

This command is used by the master to control the slave devices in the network.
NMT Slave performs NMT Slave state machine.
Only when it becomes Pre-operational state, Configuration of the devices is enabled.
The figure below shows the NMT State Diagram of a CANopen device.

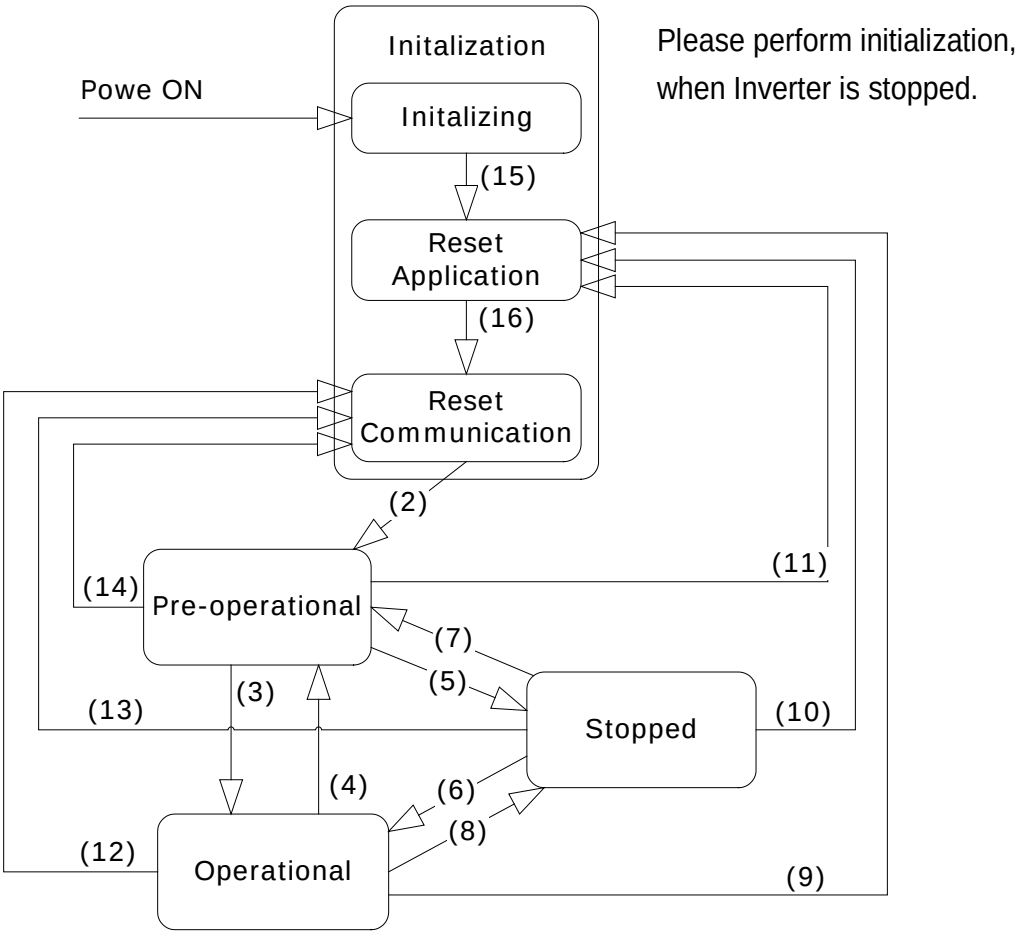

NMT State Transformation	Transformation Condition
(1)	At power on the NMT state initialization is entered automatically.
(2)	NMT state initialization is finished – enter NMT state Pre-operational automatically.
(3)	NMT service start remote node indication or by local control.
(4), (7)	NMT service enter pre-operational indication.
(5), (8)	NMT service stop remote node indication.
(9), (10),(11)	NMT service reset node indication
(12), (13),(14)	NMT service reset communication indication.
(15)	NMT sub-state reset application is finished – NMT sub-state reset application is entered automatically.
(16)	NMT sub-state reset application is finished – NMT sub-state reset communication is entered automatically.

Note)

NMT Command	Name
001	Start_Remote_Node
002	Stop_Remote_Node
128	Enter_Pre-operational State
129	Reset_Node
130	Reset_Communication

4.2.1 NMT state initialization

Once power is applied to CANopen device or Reset is performed, it automatically becomes Initialization state. When Initialization is completed, it becomes Pre-operational state.

The Initialization also is divided into 3 modes.

Sub-State	Description
Initializing	The beginning status of the Option, which is the initialization stage after Power-On or H/W Reset.
Reset Application	NMT requesting Node Reset. The initialization is conducted according to the profile.
Reset Communication	NMT requesting Communication Reset, and notice the Master of boot-up via NMT frame. This state becomes Pre Operational automatically.

4.2.2 NMT state Pre-operational

Prior to PDO communication, Master transmits the information on PDO to the Slave through SDO or reads through the necessary data. This is the step of preparing PDO communication before starting PDO communication through SDO.
In this state, when Start_Remote_Node Command is received from NMT Master, it becomes Operational state.

4.2.3 NMT state operational

Once it becomes Operational state, all the Communication Objects get Active, enabling SDO communication, Synchronization, Error Control, and Emcy Message as well as PCO communication.
In this state when Stop_Remote_Node Command is received from NMT Master, it becomes Stopped state.

4.2.4 NMT state stopped

When it becomes Stopped state, all the communications other than NMT and Heart for Error Control are stopped.
When Enter_Pre-operational_State Command is received from NMT Master in this state, it becomes Pre-operational state.

AKSA OTOMASYON

4.2.5 The frames enabling communication by NMT status

	Pre-operational	Operational	Stopped
PDO	X	O	X
SDO	O	O	X
SYNC	O	O	X
TIME	O	O	X
EMCY	O	O	X
Node control and error control	O	O	O

4.3 Error Control Protocols

Error Control Protocol is the Protocol that checks if the CANopen devices connected with the Network are properly working.
Error Control Protocol consists of two types; Node/Life Guarding Protocol and Heartbeat Protocol.

4.3.1 Protocol node/life guarding

Node/Life Guarding is used to check if CANopen Device is properly working.
Master transmits RTR Frame to the NMT Slave in a routine manner (Preset Node Guard Time). Upon receipt of RTR Frame, the Slave device responds RTR Frame that it works properly together with its own NMT State.

NMT status	Name
4	Prepared
5	Operational
127	Pre-operational

In the event it fails to transmit RTR Frame until the elapse of Master Node Life Time or the Slave dose not receive any response on RTR Frame from the Master until the elapse of Node Life Time, there occurs Guard Error. In the case of S100 CANopen communication card, CANopen NMT State becomes Pre-operational.

4.3.2 Protocol heartbeat

When Control Protocol is set to Heartbeat, it sends its own MNT State information at every time set in the Heartbeat Producer. In the event Heartbeat Producer fails to send Heartbeat during the time preset, Heartbeat Event takes place in the Consumer.
S100 CANopen informs the Consumers of the current NMT State at every time set as the Producer.

4.3.3 CANopen EDS File

CANopen EDS File is a Test File used to control the parameters of S100 inverter as the Master program of CANopen Manager, etc.
EDS file can be downloaded from our homepage (http://www.lsis.com).
Below is the type of EDS FILE.

S100_xxxx_CANopen.eds (xxxx version information)
E.g.) S100_0005_CANopen.eds (S100 V0.5 EDS File)

S100_0005_CANopen.eds is inserted in the folder for EDS FILE in the Master Configuration program.

AKSA OTOMASYON

Chapter 5. Detailed Specification of Communication Profile Specific Objects

5.1 Device Type

The SDO indicates the device type of the Option.

Index	**0x1000**
Data type	UNSIGNED32
Sub-index	0x00
Property	RO (Read Only)
Data	0x00010192 Consisting of two words; Upper words indicate Frequency Converter(0x01) while Lower words indicate Drive Profile DSP402(0x0192).

5.2 Error Register

The information on the error of the Option.

Index	**0x1001**	
Data type	UNSIGNED8	
Sub-index	0x00	
Property	RO	
Data	Bit	Information
	0	Generic error
	1	Current
	2	Voltage
	3	Temperature
	4	Reserved
	5	Reserved
	6	Reserved
	7	Manufacturer-specific

Note) The table below presents the Inverter trips apply to Error Resgister Data.

Error Register Data	Inverter Trip
Generic error	HW Diag Fuse Open External Trip BX
Current error	Inverter Overload Trip Over Current1 Ground Trip Over Current2
Voltage error	In Phase Open Over Voltage Low Voltage
Temperature error	NTC Open Over Heat
Manufacturer-specific	Ethermal Trip Out Phase Open Over Load Under Load Thermal Trip Pre PID Fail Lost Command

5.3 Pre-defined Error Field

The information on the current Emergency

Index	**0x1003**	
Data type	UNSIGNED32	
Object code	Object code	
Sub-index	0x00	
Data type	UNSIGNED8	
Description	Number of the occurred errors	
Property	RW (Read/ Write)	
Data	Read	Number of the current emergency errors
	Write	Enter “0” to rest all the emergencies
Sub-index	0x01	
Data type	UNSIGNED8	
Description	Information on the last emergency	

AKSA OTOMASYON

Property	RO (Read only)			
	Error Code	Trip	Error Code	Trip
Data	0x0000	None	0x8402	OverSpeed
	0x1000	UNDEFINED	0x8200	Protocol Error
	0x2220	Inverter OLT	0x8210	PDO not processed due to length error
	0x2310	OverCurrent1	0x8220	PDO length exceeded
	0x2330	Ground Trip	0x9001	External Trip
	0x2340	OverCurrent2	0x9002	BX
	0x3130	In Phase Open	0x9003	Safety A Trip
	0x3210	Over Voltage	0x9004	Safety B Trip
	0x3220	Low Voltage	0xFF02	Ethermal
	0x4000	NTC Open	0xFF03	Out Phase Open
	0x4310	Over Heat	0xFF04	Over Load
	0x5000	HWDiag	0xFF05	Under Load
	0x5450	Fuse Open	0xFF06	Thermal Trip
	0x7120	No Motor Trip	0xFF07	Pre PID Fail
	0x8401	Speed Dev Trip	0xFF0A	Lost Command

5.4 COB-ID SYNC Message

SDO that reads and writes the information on CAN ID of the Device (Master) that sends SYNC Message.
SYNC Message controls Action of PDO Transmission Type of which is Synchronous.

The Bit format is as follows;

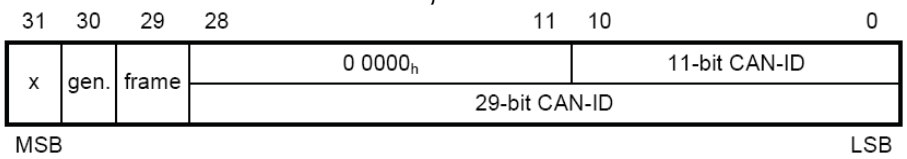

The S100 CANopen Option only receives and does not generate SYNC, and supports Standard ID only. Therefore, both the gen and frame must be 0.

Index	**0x1005**	
Data type	UNSIGNED32	
Sub-index	0x00	
Property	RW	
Data	Read	COB-ID of the current SYNC setting
	Write	Set up the COB-ID of SYNC

5.5 Manufacturer Device Name

Name information of the CANopen Option.

Index	**0x1008**
Data type	VISIBLE_STRING (String)
Sub-index	0x00
Property	CONST (Read only data. Unchangeable)
Data	S100 CANopen

5.6 Manufacturer Hardware Version

Version data of the hardware of the Option.

Index	**0x1009**
Data type	VISIBLE_STRING (String)
Sub-index	0x00
Property	CONST (Read only data. Unchangeable)
Data	CANopen 1.00 (May differ by the hardware version of the Option)

5.7 Manufacturer Software Version

Version data of the software of the Option.

Index	**0x100A**
Data type	VISIBLE_STRING (String)
Sub-index	0x00
Property	CONST (Read only data. Unchangeable)
Data	Version 1.00 (May differ by the software version of

AKSA OTOMASYON

	the Option)

5.8 Guard Time

This SDO sets the guard time when using the Node Guarding Protocol of the Error Control Protocol.

Index	**0x100C**
Data type	UNSIGNED16
Sub-index	0x00
Property	RW
Data	Guard Time, unit: msec

5.9 Life Time Factor

This SDO sets the life time factor when using the Node Guarding Protocol of the Error Control Protocol.

Index	**0x100D**
Data type	UNSIGNED8
Sub-index	0x00
Property	RW
Data	This factor is for the calculation of the Node Life Time, and is zero when not using the Node Guarding Protocol.

5.10 COB-ID EMCY

This SDO sets the CAN-ID of the Emergency Frame. In the S100 CANopen, setting is prohibited, only reading is allowed.

Index	**0x1014**
Data type	UNSIGNED32
Sub-index	0x00
Property	RW
Data	$NODEID+0x80 ($Node ID is the FBus ID currently set up in the Option.)

This SDO sets the CAN-ID of the Emergency Frame. In the S100 CANopen, setting is prohibited, but only reading is allowed.

5.11 Producer Heartbeat Time

This SDO indicates the time at which the Heartbeat is transmitted.

Index	**0x1017**
Data type	UNSIGNED16
Sub-index	0x00
Property	RW
Data	Set up time in msec units.

Chapter 6. Profile

6.1 CiA 402 Drive and Motion Control Device Profile

Velocity Mode only is supported.

6.1.1 Finite state automation

This is the state of the Option used at CiA 402.

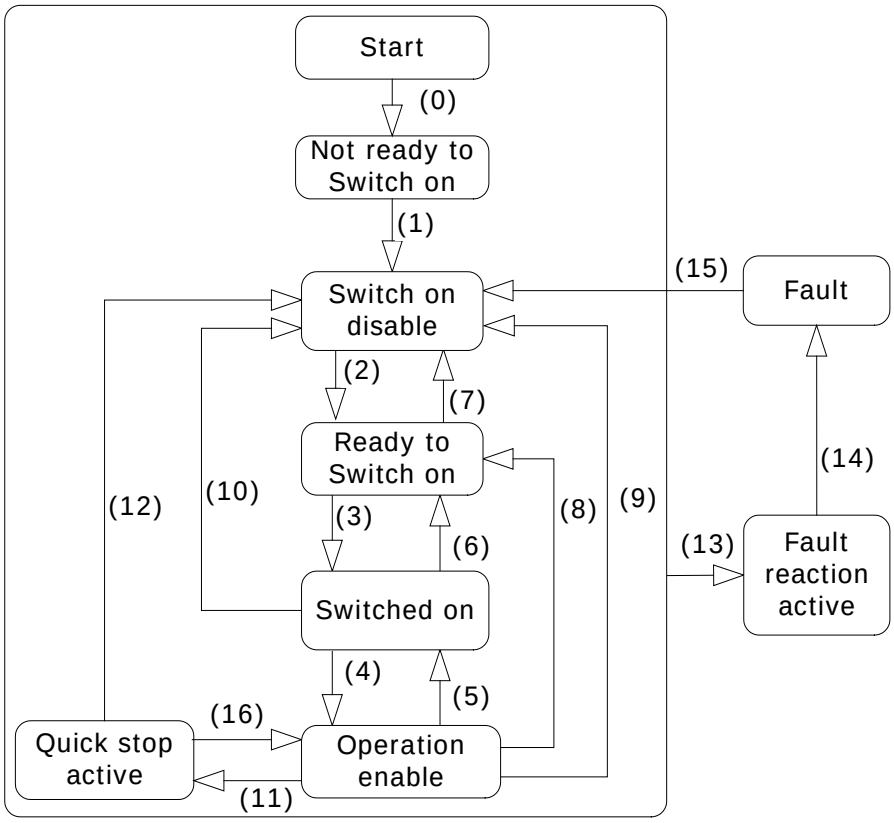

NMT Status	Description
Not ready to Switch On	The hardware and Stack of CANopen are initialized in this state.
Switch on disable	Current Option state is not available for Switch On.
Ready to switch on	Ready to change to switch-on state anytime.
Switch on	Ready for Operation enable. RN command can be issued anytime.
Operation enabled	Motor is running.
Quick stop active	Motor is to be or has been stopped.

The table below presents the action of the inverter according to status change.

Transition	Event	Action
0	Automatic change	Conduct self-diagnosis and initialize parameters
1	Automatic change	CANopen communication enabled
2	Change to Operation Mode	None
3	On receiving Switch on command	None
4	On receiving Enable Operation command	Motor drive
5	On receiving Disable Operation command	The command to maintain current inverter status is not accepted. I.e., stop command is not accepted.
6	On receiving Shut Down command	If motor has been running, conduct Free run stop
7	On receiving Disable voltage command	None
8	On receiving Shut Down command	Conduct Free run stop
9	On receiving Disable voltage command	Conduct Free run stop
10	On receiving Disable voltage command or Quick Stop command	Conduct Free run stop
11	On receiving Quick Stop command	Reduce speed at the reducing time setup in the Quick Stop
12	On receiving Disable voltage command	Conduct Free run stop
13	When the inverter tripped	Conduct Trip sequence
14	Automatic change	Conduct Trip sequence
15	On receiving Reset command or Trip is released	Change to Switch on disable state
16	On receiving Enable operation command	Motor runs again

AKSA OTOMASYON

6.1.2 CiA 402 SDO

▶ Error codes (Object: 0x603F)

When the inverter is tripped, this Object is used to identify the type of the trip.

Index	Sub-index	Name	Type	Property	Unit	Range
0x603F	-	Error code	U16	R	-	-

The table below presents the Error code No. for response to the inverter trip.

	Fault Code Number	Description	Fault Code Number	Description
Data	0x0000	None	0x7120	No Motor Trip
	0x1000	Untitled	0x8401	Speed Dev Trip
	0x2220	Inverter OLT	0x8402	Over Speed
	0x2310	OverCurrent1	0x9001	External Trip
	0x2330	Ground Trip	0x9002	BX
	0x2340	OverCurrent2	0xFF01	Ethermal
	0x3130	In Phase Open	0xFF03	Out Phase Open
	0x3210	Over Voltage	0xFF04	Over Load
	0x3220	Low Voltage	0xFF05	Under Load
	0x4000	NTC Open	0xFF06	Thermal Trip
	0x4310	Over Heat	0xFF07	Pre PID Fail
	0x5000	HW Diag	0xFF0A	Lost Command
	0x5450	Fuse Open	-	-

▶ Control word (Object: 0x6040)

It is the Object used to operate the inverter.

Index	Sub-index	Name	Type	Property	Unit	Range
0x6040	-	Control word	U16	RW	-	-

In the event CM-11 Profile Sel is set to 1 (LS Device Profile (PDO3)), it does not support this parameter.

The Bit composition below presents the bit command of the Control Word.

Bit	Description
0	Switch on
1	Enable voltage
2	Disable quick stop
3	Enable operation
4	Ramp function generator disable
5	Ramp function generator stop
6	Ramp function generator zero
7	Reset fault
8	Halt
9	Reserved
10	Reserved
11~15	Reserved

The state of FSA (Finite State Automation) in the Chapter 6.1.1 can be changed by changing the value of Control word into Bit information related with Device operation command using the values of Bits 0~3 and Bit 7.

For example, Control word must be 0XxxxF(xxxx xxxx xxxx 1111) to become “Operation Enable” FAS state in the table below (in the case of No. 4 Transition).

AKSA OTOMASYON

Command	7	3	2	1	0	Refer to Chapter 6.1.1 FAS	
	Fault reset	Enable operation	Quick stop disable	Enable voltage	Switch on	Trans-formed value	Status
Shutdown	O	X	1	1	O	2, 6, 8	Ready to switch on
Switch on	O	O	1	1	1	3	Switched on
Disable Voltage	O	X	X	O	X	7, 9, 10,12	Switch on disabled
Quick Stop	O	X	O	1	X	7, 10, 11	-
Disable Operation	O	O	1	1	1	5	Switched on
Enable Operation	O	1	1	1	1	4, 16	Operation enabled
Fault Reset	↑	X	X	X	X	15	Switch on disabled

X symbol means whether it is set to 0 or 1 won't matter.

The bits between 4bit and 7bit are command bits which run in Operation Mode.

Bit	Value	Description
4 (Enable Ramp)	0	Maintain previous operational state
	1	Operate inverter by command bit
5 (Unlock Ramp)	0	Hold output frequency
	1	Drive up to the target frequency
6 (Reference Ramp)	0	Enter zero in the target frequency
	1	Enter setting value in the target frequency
8 (Halt)	X	Not used

▶ Status word (Object: 0x6041)

It is the Object that indicates the current state of the current Device.

Index	Sub-index	Name	Type	Property	Unit	Range
0x6041	-	Status word	U16	RO	-	-

In the event CM-11 Profile Sel is set to 1 (LS Device Profile (PDO3)), it does not support this parameter.

The bit composition below presents the command by bits of Status Word.

Bit	Description
0	Ready to switch on
1	Switched on
2	Operation enabled
3	Fault (Trip)
4	Voltage enable
5	Quick stop
6	Switch on disable
7	Warning
8	Reserved
9	Remote
10	Target reached
11	Internal limit active
12~15	Reserved

The bit values according to the state of FAS.

Status word	PDS FSA state
xxxx xxxx x0xx 0000	Not ready to switch on
xxxx xxxx x1xx 0000	Switch on disable
xxxx xxxx x01x 0001	Ready to switch on
xxxx xxxx x01x 0011	Switch on
xxxx xxxx x01x 0111	Operation enabled
xxxx xxxx x00x 0111	Quick stop active
xxxx xxxx x0xx 1111	Fault reaction active
xxxx xxxx x0xx 1000	Fault

AKSA OTOMASYON

▶ vl target velocity (Object: 0x6042)

It is the Object that sets the speed of Target.

Index	Sub-index	Name	Type	Property	Unit	Range
0x6042	0	Vl target velocity	U16	RW	rpm	-30000 ~ 30000 (-) Reverse (+) Forward

In the event CM-11 Profile Sel is set to 1 (LS Device Profile (PDO3)), it does not support this parameter.

▶ vl velocity demand (Object: 0x6043)

It is the Object that shows the output speed of the current inverter.

Index	Sub-index	Name	Type	Property	Unit	Range
0x6043	0	Vl velocity demand	U16	RO	rpm	-30000 ~ 30000 (-) Reverse (+) Forward

In the event CM-11 Profile Sel is set to 1 (LS Device Profile (PDO3)), it does not support this parameter.

▶ vl control effort (Object: 0x6044)

It is the Object that shows the operation speed of the current motor.
If the inverter is under V/F operation or Sensorless operation, it is equal to the value of output speed of the inverter.

Index	Sub-index	Name	Type	Property	Unit	Range
0x6044	0	Vl control effort	U16	RO	rpm	-30000 ~ 30000 (-) Reverse (+) Forward

In the event CM-11 Profile Sel is set to 1 (LS Device Profile (PDO3)), it does not support this parameter.

▶ vl velocity acceleration (Object: 0x6048)

It is the Object that sets Acceleration Time.
As shown in the picture below, it determines acceleration time through Delta Speed and Delta Time.
In consideration of the stability of our inverter, it fixes Delta Speed at Max Speed.

$$Vl\ Velocity\ Acceleration = \frac{Delta\ Speed}{Delta\ Time}$$

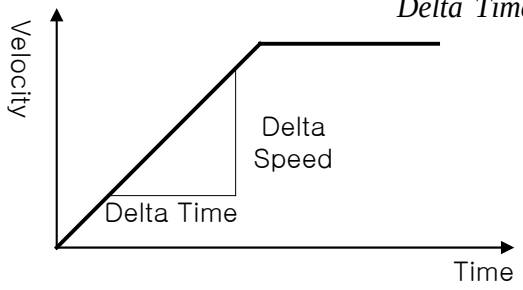

Transfer characteristic of the velocity accleration

Index	Sub-index	Name	Type	Property	Unit	Range
0x6048	Vl velocity acceleration		-	-	-	-
	0	Number of entries	U8	RO	-	-
	2	Delta Time	U16	RO	sec	0.0~600.0

In the event CM-11 Profile Sel is set to 1 (LS Device Profile (PDO3)), it does not support this parameter.

▶ vl velocity deceleration (Object: 0x6049)

It is the Object that sets Deceleration Time.
As shown in the picture as below, it determines acceleration time through Delta Speed and Delta Time.
In consideration of the stability of our inverter, it fixes Delta Speed at Max Speed.

$$Vl\ velocity\ \text{deceleration} = \frac{Delta\ Speed}{Delta\ Time}$$

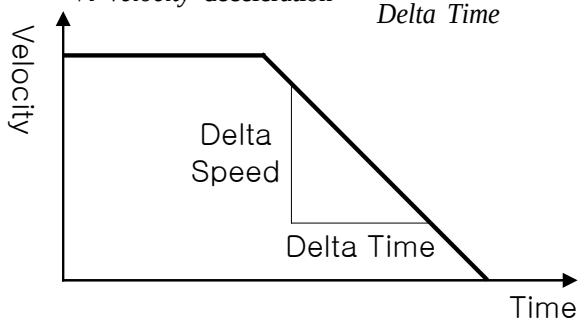

Transfer characteristic of the velocity deceleration

Index	Sub-index	Name	Type	Property	Unit	Range
0x6049	VI velocity deceleration		-	-	-	-
	0	Number of entries	U8	RO	-	-
	2	Delta Time	U16	RO	sec	0.0~600.0

▶ vl velocity Quick Stop (Object: 0x604A)

It is the object that sets Quick Stop time.

As shown in the picture as below, it determines Quick Stop Deceleration Time through Delta Speed and Delta Time.

In consideration of the stability of the inverter, it fixes Delta Speed at the maximum speed,

$$Vl\ velocity\ quick\ stop = \frac{Delta\ Speed}{Delta\ Time}$$

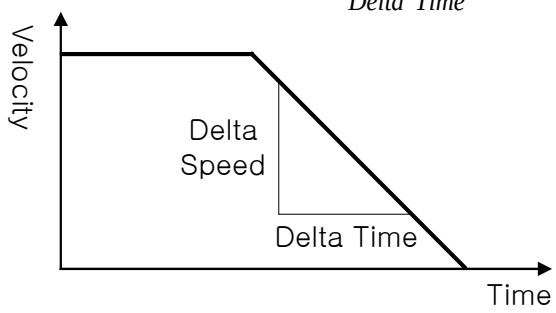

Transfer characteristic of the quick stop

Index	Sub-index	Name	Type	Property	Unit	Range
0x604A	VI velocity quick stop		-	-	-	-
	0	Number of entries	U8	RO	-	-
	2	Delta Time	U16	RW	sec	0.0~600.0

6.1.3 SDO for S100

▶ SDO address in the keypad parameter area

The Keypad parameters are indexed by group. The Sub-Index is the code number. The table below presents the index values by Group.

Index	Area
0x4010	DRV group
0x4011	BAS group
0x4012	ADV group
0x4013	CON group
0x4014	IN group
0x4015	OUT group
0x4016	COM group
0x4017	APP group
0x401A	PRT group
0x401B	M2
0x401C	USS group
0x401D	USF group

E.g.) To obtain the value of the Output Current which is the Code 8 parameter in Group, read the values in the Index 0x4010 and Sub-Index 9.

▶ DRV(Drive) group (0x4010)

Index	Sub-index	Name	Type	Property	Unit	Range
0x4010	Code Num **+1**	Keypad Parameter name	U16	RO or RW	-	-

E.g) To read the value of the ACC.Time-1 parameter, read the value in the Index 0x4010 and Sub-index 3.

▶ BA(BASIC) group (0x4011)

Index	Sub-index	Name	Type	Property	Unit	Range
0x4011	Code Num	Keypad Parameter name	U16	RO or RW	-	-

AKSA OTOMASYON

E.g) To read the value of the bA-70 ACC.Time-1 parameter, read the value in the Index 0x4011 and Sub-index 70.

▶ Ad(ADVANCED) group (0x4012)

Index	Sub-index	Name	Type	Property	Unit	Range
0x4012	Code Num	Keypad Parameter name	U16	RO or RW	-	-

▶ Cn(CONTROL) group (0x4013)

Index	Sub-index	Name	Type	Property	Unit	Range
0x4013	Code Num	Keypad Parameter name	U16	RO or RW	-	-

▶ IN(OUTPUT TERMINAL) group (0x4014)

Index	Sub-index	Name	Type	Property	Unit	Range
0x4014	Code Num	Keypad Parameter name	U16	RO or RW	-	-

▶ OU(OUTPUT TERMINL) group (0x4015)

Index	Sub-index	Name	Type	Property	Unit	Range
0x4015	Code Num	Keypad Parameter name	U16	RO or RW	-	-

▶ CM(COMMUNICATION) group (0x4016)

Index	Sub-index	Name	Type	Property	Unit	Range
0x4016	Code Num	Keypad Parameter name	U16	RO or RW	-	-

▶ APP(APPLICATION) group (0x4017)

Index	Sub-index	Name	Type	Property	Unit	Range
0x4017	Code Num	Keypad Parameter name	U16	RO or RW	-	-

▶ PRT(PROTECTION) group (0x401A)

Index	Sub-index	Name	Type	Property	Unit	Range
0x401A	Code Num	Keypad Parameter name	U16	RO or RW	-	-

▶ M2(MOTOR 2) group (0x401B)

Index	Sub-index	Name	Type	Property	Unit	Range
0x401B	Code Num	Keypad Parameter name	U16	RO or RW	-	-

▶ USS(USER SEQUENCE STEP) group (0x401C)

Index	Sub-index	Name	Type	Property	Unit	Range
0x401C	Code Num	Keypad Parameter name	U16	RO or RW	-	-

▶ USF(USER SEQUENCE FUNCTION) group (0x401D)

Index	Sub-index	Name	Type	Property	Unit	Range
0x401D	Code Num	Keypad Parameter name	U16	RO or RW	-	-

AKSA OTOMASYON

6.2 PDO

Of the CiA 402 Drive and Motion Control, implemented for the PDO for the frequency converter.

6.2.1 RPDO

▶ **RPDO1 Parameter (0x1400)**

Index	Sub-index	Name	Type	Property	Unit	Range
0x1400	0	RPOD1 Parameter	U8	RO	-	-
	1	COB ID	U32	RW	-	-
	2	Transmission Type	U8	RW	-	-

COB-ID is the unique CAN ID value of PDO.

Trans Mode according to the Transmission Type value.

Transmission Type Value	Description
0	At the occurrence of SYNC, the master creates RPDO, which is transmitted only when the data has been changed from the previous value.
1~240	Receiving SYNC for preset frequency, the RPDO is transmitted once.
252~253	Not supported.
255	Transmit RPDO by Event Trigger.

▶ **RPDO3 Parameter (0x1402)**

Index	Sub-index	Name	Type	Property	Unit	Range
0x1402	0	RPOD1 Parameter	U8	RO	-	-
	1	COB ID	U32	RW	-	-
	2	Transmission Type	U8	RW	-	-

COB-ID is the unique CAN ID value of PDO.

6.2.2 RPDO mapping

Since S100 CANopen Map is fixed, user cannot edit the map.

▶ **RPDO1 mapping(0x1600)**

Index	Sub-index	Name	Type	Property	Unit	Range
0x1600	1	PDO Mapping Entry1 0x6040 Control word	U32	RO	-	-
	2	PDO Mapping Entry2 0x6042 Vl Target Velocity	U32	RO	-	-

▶ **RPDO3 mapping(0x1602)**

Index	Sub-index	Name	Type	Property	Unit	Range
0x1602	1	Input1 0x3010	U32	RW	-	-
	2	Input1 0x3011	U32	RW	-	-
	3	Input1 0x3012	U32	RW	-	-
	4	Input1 0x3013	U32	RW	-	-

6.2.3 TPDO

▶ **TPDO1 Parameter (0x1800)**

Index	Sub-index	Name	Type	Property	Unit	Range
0x1800	0	TPDO1 Parameter	U8	RO	-	-
	1	COB ID	U32	RW	-	-
	2	Transmission Type	U8	RW	-	-
	3	Inhibit Time	U16	RW	-	-
	5	Event Timer	U16	RW	-	-

COB-ID is the unique CAN ID value of PDO.
The Transmission type of the S100 CANopen is fixed in 255(0xFF, Asynchronous). TPDO is transmitted every Event Time.

AKSA OTOMASYON

▶ TPDO3 Parameter (0x1802)

Index	Sub-index	Name	Type	Property	Unit	Range
0x1802	0	TPDO3 Parameter	U8	RO	-	-
	1	COB ID	U32	RW	-	-
	2	Transmission Type	U8	RW	-	-
	3	Inhibit Time	U16	RW	-	-
	5	Event Timer	U16	RW	-	-

COB-ID is the unique CAN ID value of PDO.
The Transmission type of the S100 CANopen is fixed in 255(0xFF, Asynchronous). It transmits TPDO by Event Trigger. If the data is not changes within the Event Time, TPDO is transmitted. If the data is changed within the Event Time, the TPDO is transmitted after Inhibit Time. TPDO is not transmitted until the Inhibit Time has been passed.

6.2.4 TPDO mapping

The map of the S100 CANopen is fixed; therefore, user cannot edit the map.

▶ TPDO1 mapping(0x1A00)

Index	Sub-index	Name	Type	Property	Unit	Range
0x1A00	1	PDO Mapping Entry1 0x6041 Status word	U32	RO	-	-
	2	PDO Mapping Entry2 0x6044 Vl Control Effort	U32	RO	-	-

▶ TPDO3 mapping(0x1A02)

Index	Sub-index	Name	Type	Property	Unit	Range
0x1A02	1	Input1 0x3010	U32	RW	-	-
	2	Input1 0x3011	U32	RW	-	-
	3	Input1 0x3012	U32	RW	-	-
	4	Input1 0x3013	U32	RW	-	-

Chapter 7. Inverter Parameter

7.1 Related Parameter List

Code	Name of Parameter	Default	Range
drv	Cmd Source	0(Fx/Rx-1)	0. Keypad
			1. Fx/Rx-1
			2. Fx/Rx-2
			3. RS485
			4. FieldBus
Frq	Freq Ref Src	0(Keypad-1)	0. Keypad-1
			1. Keypad-2
			2. V1
			3. Reserved
			4. V2
			5. I2
			6. Int 485
			7. Reserved
			8. Fieldbus
			9. Reserved
			10. Reserved
			11. Reserved
			12. Pulse
CM-06	FBus S/W Ver	-	-
CM-07	FBus ID	1	1~127
CM-09	FBus LED	-	-

AKSA OTOMASYON

CM-10	Opt Parameter1	0	0. 1Mbps
			1. 800Kbps
			2. 500Kbps
			3. 250Kbps
			4. 125Kbps
			5. 100Kbps
			6. 50Kbps
			7. 20Kbps
CM-11	Opt Parameter1	0 (CiA402 Profile)	0. (CiA 402 Profile) (Frequency Converter PDO1) 1. (LS Profile)
CM-31	Para Status-1	0x000A	0~0xFFFF
CM-32	Para Status-2	0x000E	0~0xFFFF
CM-33	Para Status-3	0x000F	0~0xFFFF
CM-34	Para Status-4	0x0000	0~0xFFFF
CM-51	Para Control-1	0x0005	0~0xFFFF
CM-52	Para Control-2	0x0006	0~0xFFFF
CM-53	Para Control-3	0x0000	0~0xFFFF
CM-54	Para Control-4	0x0000	0~0xFFFF
CM-94	Comm Update	0(None)	0. No
			1. Yes
Pr-12	Lost Cmd Mode	0(None)	0. None
			1. Free-Run
			2. Dec
			3. Hold Input
			4. Hold Output
			5. Lost Preset
Pr-13	Lost Cmd Time	1.0 sec	0.1 ~ 120.0 sec
Pr-14	Lost Preset F	0 Hz	Start Freq ~ Max Freq [Hz]

7.2 Description on the Basic Field Bus Parameters

7.2.1 Set operation command source of the inverter - Cmd Source(drv)

drv	Cmd Source

It sets the operation command source of the inverter.
To set the operation/stop command of the inverter using CANopen communication, it requires to set “drv Cmd Source” to “4(Fieldbus)”.

7.2.2 Set frequency command source of the inverter - Freq Ref Src(Frq)

Frq	Freq Ref Src

It sets the frequency command source of the inverter.
To set the command frequency of the inverter using CANopen communication, it requires to set “Frq Freq Ref Src” to “8(Fieldbus)”..

7.2.3 Set Station ID - Fbus ID(CM-07)

CM-07	FBus ID
CM-94	Comm Update

It is the parameter that sets the Station ID value of CANopen. Station Number can be set to 1 through127.
Station ID may not be set in duplicate. Make sure the Station ID value is not set using the other Station ID of the network.
When Station ID is changed, ERR LED of CANopen communication card will flicker in twice the interval of CPU LED.
As CANopen-related parameter has been changed, perform Comm UpDate and then apply Station ID to CANopen communication card.
Only when CM-94 Comm UpDate is set to Yes, it reflects the changed Station ID in CANopen communication card.

AKSA OTOMASYON

7.2.4 Display communication state LED State - Fbus Led(CM-9)

It is the parameter that indicates the flickering state of four LEDs (BUS, NODE, ERR, and CPU LED) mounted on the CANopen communication card.
It displays LED state in the order of BUS, NODE, ERR, and CPU LED from right to left on the Keypad.

- **CM-9 LED State E.g) 1101**

LED	BUS (GREEN)	NODE (GREEN)	ERR (RED)	CPU (GREEN)
Status	ON	ON	OFF	ON
SEG KPD				
LCD KPD				

7.2.5 Comm Update (CM-94)

CM-61	Station ID
CM-62	Baud rate
CM-63	Profile Sel
CM-67	Comm Update

The values of Station ID, baudrate and Profile must be modified and Comm UpDate must be set to Yes without fail.
Only when Comm UpDate is executed, the modified Station ID, baudrate, and Profile are reflected in CANopen communication card.

7.2.6 Set baudrate - Opt Parameter1 (CM-10)

CM-10	Opt Parameter1
CM-94	Comm Update

It is the parameter that sets the baudrate of CANopen. Baudrate can be set to 0(1Mbps) through 7(10kbps).
In the event of configuration of the network, baudrate of all the devices must be set equally without fail.

0 : 1 Mbps
1 : 800 kbps
2 : 500 kbps
3 : 250 kbps
4 : 125 kbps
5 : 100 kbps
6 : 50 kbps
7 : 20 kbps

When CM-10 Baudrate is changed, ERR LED of CANopen communication card will flicker in twice the interval of CPU LED.
As CANopen-related parameter has been changed, perform Comm UpDate and then apply the baudrate to CANopen communication card without fail.
Only when CM-94 Comm UpDate is set to Yes, it reflects the changed baudrate in CANopen communication card.

7.2.7 Set Profile - Opt Parameter2 (CM-11)

CM-11	Opt Parameter2
CM-94	Comm Update

It is the parameter that sets PDO communication Profile.

0 : CiA 402 Drive and Motion Control Velocity Mode
(Frequency Converter PDO1)
1 : LS Device Profile (PDO3)

When CM-11 Profile Sel is changed, ERR LED of CANopen communication card will flicker in twice the interval of CPU LED.
As CANopen-related parameter has been changed, perform Comm UpDate and then apply Profile to CANopen communication card without fail.
Only when CM-94 Comm UpDate is set to Yes, it reflects the changed Profile in CANopen communication card
In the event CM-11 Profile Sel is set to 0 (CiA 402 Profile (PDO1)), ACC and dEC values may not be set on the Keypad. Acceleration/Deceleration Time can be set with 0x6048(VI velocity acceleration), and 0x6049(VI velocity deceleration) only.
In the event CM-11 Profile Sel is set to 1 (LS Device Profile (PDO3)), it does not support 0x6040 ~ 0x6048.

AKSA OTOMASYON

7.2.8 Display communication version state - Fbus S/W ver (CM-06)

It displays the version of CANopen communication card mounted on the inverter.

7.3 Parameter Setting for the Periodic Communication

7.3.1 Set LS Profile Output Address - Para Status 1~4 (CM-31~34)

CM-11	Opt Parameter2
CM-31~34	Para status 1~4

It designates four addresses (Para Status 1~4) and then transmits the parameter value to the master through TPDO3 (Transmit PDO).

7.3.2 Set LS Profile Input Address - Para Status 1~4 (CM-51~54)

CM-11	Profile Sel
CM-51~54	Input 1~4

It designates four addresses (Para Control 1~4) and then uses the data value transmitted from the master through RPDO3 (Receive PDO) for the inverter.

7.4 Parameter setting for the Lost Command

According to the decision criteria of the Lost Command of the S100 CANopen, it judges that the Master and Slave are connected when the NMT status of the CANopen is Operation, and it does not generate Lost Command. That is, when the NMT is on the State except Operation and maintained for longer than the time set up in the Pr-13, the inverter turns to Lost Command state. However, the Lost Command can be generated only when one or more of the frequency command or operation command is set to Fieldbus.

7.4.1 How to run at communication command loss - Lost Cmd Mode (Pr-12)

Drv	Cmd Source
Frq	Freq Ref Src
Pr-12	Lost Cmd Mode
Pr-13	Lost Cmd Time
Pr-14	Lost Preset F

'How to run at communication command loss' sets how to operate when it recognizes communication command loss at the occurrence of PDO communication loss during 'communication command loss determination time'.
To use the communication command loss function, it requires to set drv to "4(Fieldbus)" or Frq to "8(Fieldbus)".

It operates according to the operation method selected in the event of communication command loss. The table below presents the operation method.

Code		Description
0	None	Speed command immediately becomes operation frequency without protective operation.
1	Free-Run	Inverter blocks output. Motor performs free-run.
2	Dec	It decelerates and then stops during the time set in Pr-07 Trip Dec Time.
3	Hold Input	Operation continues at input speed command until it reaches speed loss.
4	Hold Output	Operation continues at operation frequency before speed loss.
5	Lost Preset	It operates at the frequency set in Pr.14 Lost Preset F.

AKSA OTOMASYON

7.4.2 Communication command loss determination time - Lost Cmd Time (Pr-13)

Drv	Cmd Source
Frq	Freq Ref Src
Pr-12	Lost Cmd Mode
Pr-13	Lost Cmd Time

In the event of loss of PDO communication during ‘communication command loss determination time’ it is recognized as communication command loss.

To use the communication command loss function, it requires to set drv to “4(Fieldbus)” or Frq to “8(Fieldbus)”.

In the event communication is resumed within ‘communication command loss determination time’ and restored to normal state, it does not recognize it as error.

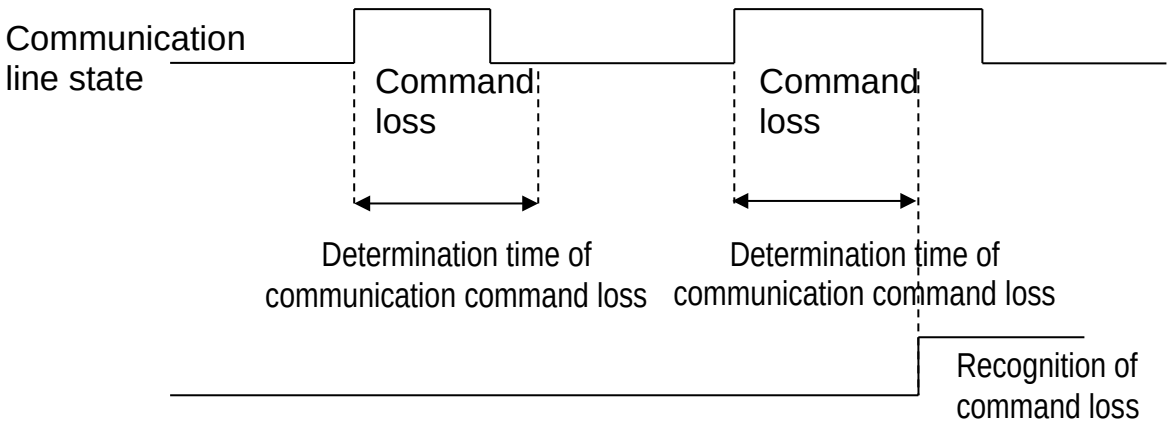

Warranty

Maker	LS Industrial Systems Co., Ltd.		Installation Date	
Model No.	S100 CANopen Communication Module		Warranty Period	
Customer Information	Name			
	Address			
	Tel.			
Sales Office (Distributor)	Name			
	Address			
	Tel.			

Warranty period is 12 months after installation or 18 months after manufactured when the installation date is unidentified. However, the guarantee term may vary on the sales term.

IN-WARRANTY service information

If the defective part has been identified under normal and proper use within the guarantee term, contact your local authorized LS distributor or LS Service center.

OUT-OF WARRANTY service information

The guarantee will not apply in the following cases, even if the guarantee term has not expired.

- Damage was caused by misuse, negligence or accident.
- Damage was caused by abnormal voltage and peripheral devices' malfunction (failure).
- Damage was caused by an earthquake, fire, flooding, lightning, or other natural calamities.
- When LS nameplate is not attached.
- When the warranty period has expired.

Revision History

No	Date	Edition	Changes
1	2012.05	First Release	
2	2015.07	2nd Edition	Image changed