Thank you for using our **S100 Ethernet option module**

Safety PRECAUTIONS

- Always follow safety instructions to prevent accidents and potential hazards from occurring.
- Safety precautions are classified into “WARNING” and “CAUTION” and their meanings are as follows:

⚠ **WARNING** Improper operation may result in serious personal injury or death.

⚠ **CAUTION** Improper operation may result in slight to medium personal injury or property damage

- The indicated illustrations on the product and in the manual have the following meanings.

⚠ Danger may be present. Read the message and follow the instructions carefully.

⚠ Particular attention should be paid because danger of an electric shock may be present.

- Keep operating instructions handy for quick reference.
- Read the operating instructions carefully to fully understand the functions of the S100 series and to use it properly.

⚠ CAUTION

- **Be cautious, when handling the CMOS components of the communication module.**
  Static may lead to malfunctioning of the product.
- **Turn off the inverter power, when changing the communication cable.**
  Otherwise, you may damage the module or a communication error may occur.
- **Make sure to insert the Communication module connector to the inverter precisely.**
  Otherwise, you may damage the module or a communication error may occur.
- **Check the parameter unit before setting up the parameter.**

Otherwise, a communication error may occur.

1. Introduction 1
1.1 What is Ethernet? 1
1.2 Components 1
2. Ethernet Communication Module Features 2
2.1 Common Features 2
2.2 Layout of Ethernet Communication Module 2
2.3 Installation 3
2.4 Terminal Block of Ethernet communication Specifications 5
2.5 Network Cable Specification 6
2.6 Protocol Selection 7
3. LED information 8
3.1 LED display feature 8
3.2 The status of Ethernet Line LED (Ethernet/IP and Modbus/TCP are same) 8
3.3 The status of Modbus/TCP LED & Troubleshooting 9
3.4 The status of Ethernet/IP LED & Troubleshooting 10
4. Keypad Parameter of Ethernet Communication 11
4.1 FBus S/W Ver (CM-06) 13
4.2 FBus Led (CM-09) 13
4.3 IP Address, Subnet Mask, Gateway (CM-10~21) Setting 15
4.4 Ethernet Speed (CM-22) 15
4.5 CIP Input Instance(CM-29) 16
4.6 CIP Output Instance(CM-49) 17
4.7 Para Status (CM-30~38) 18
4.8 Para Control (CM-50~58) 18
4.9 Comm Update (CM-94) 18
5. Modbus/TCP 19
5.1 Modbus/TCP Frame Structure 19
5.2 Function Code Description 19
5.3 Read Holding Register 20
5.4 Read Input Register 21
5.5 Write Single Register 22
5.6 Write Multiple Register 23
5.7 Except Frame 24
5.8 Exception Frame Structure 24
5.9 Exception Code Type 24
6. Ethernet/IP 25
6.1 Basic protocol configuration 25
6.2 Implicit Message 26
6.3 Explicit Message 34
6.4 Supported Object 35
7. Lost Command 46
7.1 Inverter Keypad Parameter 46

1. Introduction

1.1 What is Ethernet?

Ethernet communication module board connects the S100 inverter to the Ethernet network. It supports two kinds of protocol, Modbus/TCP and Ethernet/IP.
Controlling and monitoring of inverter can be done by PLC sequence program or any Master Module. Since Ethernet which constitutes Internet has been used and IPv4 has been supported, wherever Internet can be done, controlling and monitoring are possible. But, Ethernet network of the factory has to be connected to Internet through gateway.
Installation time can be reduced and maintenance becomes easier just simple wiring.

1.2 Components

This product is consisting of these kinds of parts.
- Ethernet Communication Module board (CENT- S100): 1 ea
- Ethernet Module manual: 1 ea
- Brass Bar(M3xL23): 1 ea
- Brass Bar(M3xL17.3): 1 ea
- Fixed Screw(M3xL8): 2 ea

2. Ethernet Communication Module Features

2.1 Common Features

Transmission Speed	10Mbps, 100Mbps
Transmission Method	Baseband
Max. Extensible Distance between Nodes	100m (Node-Hub)
Max. Node Number	Hub connection
Auto-Negotiation	Supported
Max. Frame Size	1,500 bytes
Communication Zone Access Method	CSMA/CD
Frame Error Checking Method	CRC32
Recommended TCP Socket	2 Sockets

2.2 Layout of Ethernet Communication Module

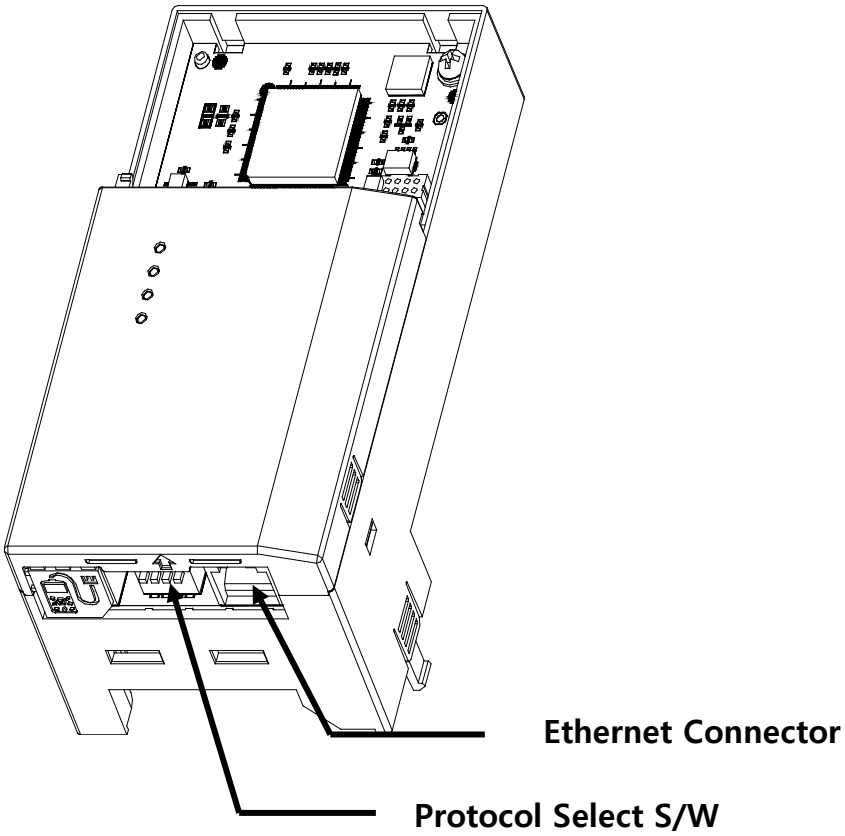

2.3 Installation

Warning) Connect a communication network after the power supply is off. If Ethernet communication module is removed or installed, the power supply should be switched off. Otherwise, the S100 inverter will be damaged entirely.
Take off Ethernet communication module from the product after the power supply is totally discharged.

■ Unfasten the front cover fixing bolt to remove the front cover and remove I/O cover((1), (2)) from a dedicated S100 inverter for communication.

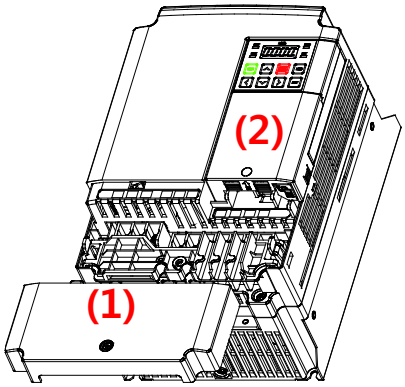

■ Remove the keypad (3).

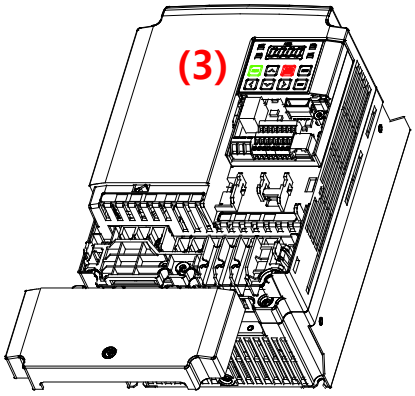

■ Unfasten a screw from I/O board and fasten the prepared brass bar(4).

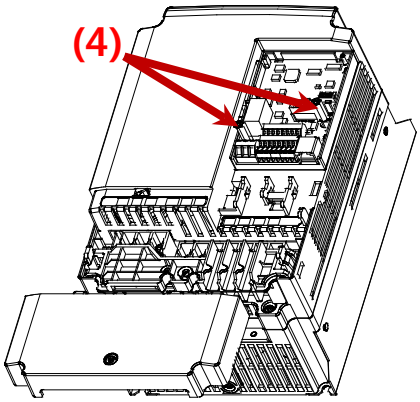

■ Mount Ethernet communication Module and fasten the removed screw(6) and the included screw(7).

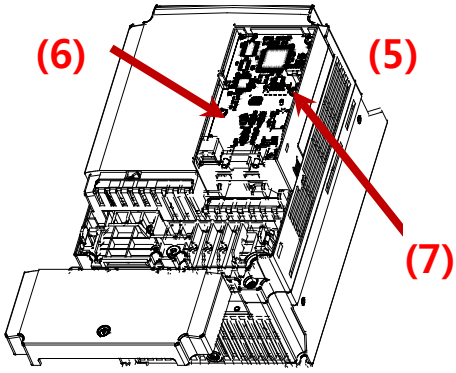

■ Install the keypad (8) at first and the communication module cover(9) in order.

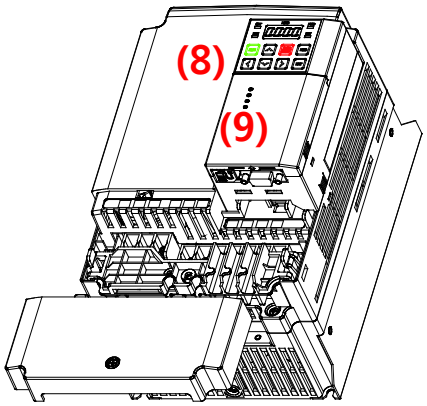

■ Install the front cover(10) again And installation is completed.

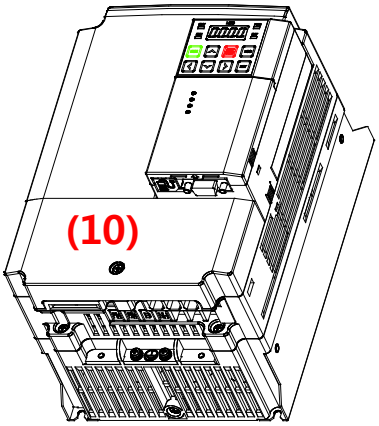

2.4 Terminal Block of Ethernet communication Specifications

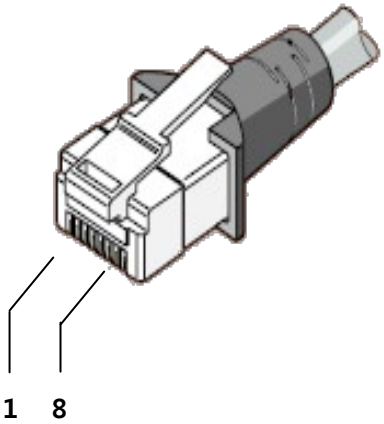

Pin No.	Signal	Description	Cable color
1	TX+	Transmitting data Plus	White / Yellow
2	TX-	Transmitting data Minus	Yellow
3	RX+	Receiving data Plus	White / Green
4	NONE	Not used	Blue
5	NONE	Not used	White / Blue
6	RX-	Receiving data Minus	Green
7	NONE	Not used	White / Brown
8	NONE	Not used	Brown

※ Make sure that cables connected to Pin1 and 2 are twisted together.
※ Make sure that cables connected to Pin3 and 6 are twisted together

2.5 Network Cable Specification

Category 5 is used. Transmission speed of category 5 is 100MHz and available up to 100Mbps.

Classification	Detail	Used
UTP (U.UTP)	Unshielded twisted pair cable	Maximum 200MHz, Voice + Information (Data)+Low video signal
FTP (S.UTP)	Foil screened twisted pair cable	Maximum 100MHz Electromagnetic interruption (EMI) or electric stability considered, Voice+ Information (Data) + Low Video signal
STP (S.STP)	Shielded twisted pair cable	Maximum 500MHz, Voice +Information(Data)+Video signal, Replacement for 75Ω coaxial cable

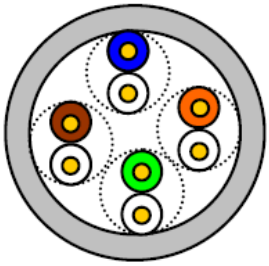

UTP

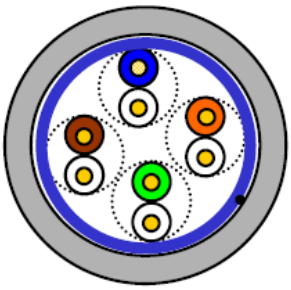

FTP

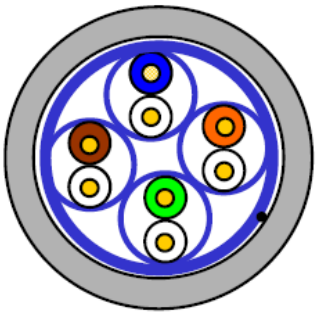

STP

2.6 Protocol Selection

For using the S100 Ethernet option module, there are 2 kinds of protocols, Modbus TCP and Ethernet IP. You can select one of the protocols by selecting the No.1 switch. The switch is placed next to the Ethernet connector for Ethernet cable. No. 2, 3 and 4 of switch are not available.

Switch State	Protocol
OFF (Switch at the upper position)	**Modbus TCP**
ON (Switch at the lower position	**Ethernet IP**

If the option module is operating, protocol will not be changed even if switch selection is changed. Protocol is determined by the state of switch when the option module is turned on or the inverter is initialized by 'Yes' execution of COM-94 Comm Update.

<The bottom side of Ethernet Communication Module >

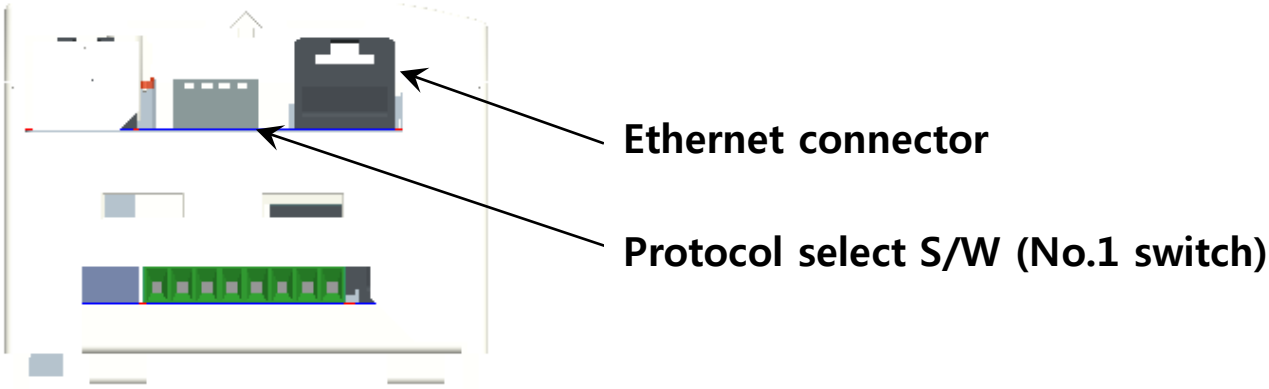

3. LED information

3.1 LED display feature

Four LEDs are located on S100 Ethernet Communication Module. Each LED indicates different functions and displays the status of Ethernet Protocol for a client.

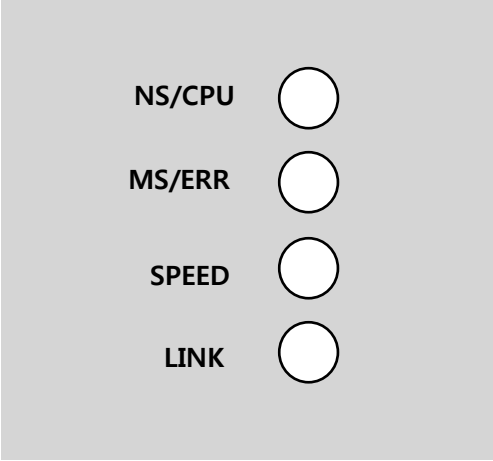

3.2 The status of Ethernet Line LED (Ethernet/IP and Modbus/TCP are same)

LED	Color	Status	Function
SPEED	Green	ON	It indicates the communication speed is 100Mbps.
		OFF	It indicates the communication speed is 10Mbps.
LINK	Green	ON	It indicates the communication module is ready to communicate.
		OFF	In case that wiring communication cable has a fault, Link LED is turned Off. Check if wiring is correct.

3.3 The status of Modbus/TCP LED & Troubleshooting

LED	Color	Status	Function and Troubleshooting
CPU	Green	Flash	It means the CPU of Modbus/TCP is operating normally when the power is well supplied to the communication module.
		OFF	Failure in power supply to the communication module. Re-install the module.
ERROR	Red	OFF	It means the communication module is normal without error.
		ON	It means IP address sets to 0.0.0.0 or 255.255.255.255. Please do not use the address IP Address because it can be only used for the specific case.
		CPU and Flash	1. It means the communication is interrupted. Turn off the power and then reinstall the module. 2. The data from inverter is not updated to Ethernet Module. Execute Comm. Update or re-generate the power again.
		Flashing slower than CPU	IP address is conflicted in a network. Check if IP address is appropriate.

3.4 The status of Ethernet/IP LED & Troubleshooting

LED	Color	Status	Function and Troubleshooting
NS	Green	ON	It means the status is I/O communicating when Class 1 connection is well connected.
		OFF	It means Client and TCP are not connected.
		Flash	It means UCMM communication is available by the registration after Client and TCP are connected.
	Red	ON	Displayed if an IP address is clashed with the same IP address in a network. Please check whether IP address is right or not.
		OFF	It means Communication module is normal
		Flash	It means Class 1 connection is disconnected abnormally. Check if the Network cable and connection state are correct.
MS	Green	ON	It means communication module board is normal.
		OFF	It means communication module has a problem.
	Red	ON	It means IP address sets to 0.0.0.0 or 255.255.255.255. Please do not use the address IP Address because it can be only used for the specific case.
		OFF	It means Communication module is normal.
		Flash	1. It means the communication is interrupted. Turn off the power and then reinstall the module. 2. The data from inverter is not updated to Ethernet Module. Do Comm. Update or re-generate the power again.

Notice

1) When the module is initialized by the selection of Ethernet/IP, LED turns on and off in order as below.
   (MS LED(GREEN) -> NS LED(RED) -> MS LED(RED) -> NS LED(GREEN) -> NS LED(RED)-> NS LED(OFF)->MS LED(GREEN))
2) When IP address is crashed, please reset IP and execute Comm. Update.
3) Do not use Comm Update (CM-94 → 1) when the inverter is working or in cyclic communication.

4. Keypad Parameter of Ethernet Communication

Inverter parameters of Modbus/TCP and Ethernet/IP are listed as shown below. (Protocol 'M' is used for Modbus/TCP and Protocol 'E' is used for Ethernet/IP)

Code Number	The Name of Parameter	Initial Value	Range	Definition	Protocol
CM-06	FBus S/W Ver	-	-	It indicates the version of Ethernet communication module.	M/E
CM-09	FBus Led			Shows the ON/OFF data of the LED on the Ethernet communication module.	M/E
CM-10	Opt Parameter1	0	0 ~ 255	Set up the IP Address.	M/E
CM-11	Opt Parameter2	0	0 ~ 255		
CM-12	Opt Parameter3	0	0 ~ 255		
CM-13	Opt Parameter4	0	0 ~ 255		
CM-14	Opt Parameter5	0	0 ~ 255	Set up the Subnet Mask.	M/E
CM-15	Opt Parameter6	0	0 ~ 255		
CM-16	Opt Parameter7	0	0 ~ 255		
CM-17	Opt Parameter8	0	0 ~ 255		
CM-18	Opt Parameter9	0	0 ~ 255	Set up the Gateway Address.	M/E
CM-19	Opt Parameter10	0	0 ~ 255		
CM-20	Opt Parameter11	0	0 ~ 255		
CM-21	Opt Parameter12	0	0 ~ 255		
CM-22	Opt Parameter13	0	0~2	Set up the Ethernet communication rate.	M/E
CM-29	In Instance	1	0~11	CIP Input Instance	E
CM-30	ParaStatus Num	3	0~8	Automatically set up according to the CIP Input Instance.	E
CM-31	Para Status-1	0x000A	0x0000 ~0xFFFF	Set up the inverter data address which will be read by the client.	E
CM-32	Para Status-2	0x000D	0x0000 ~0xFFFF		E

Code Number	The Name of Parameter	Initial Value	Range	Definition	Protocol
CM-33	Para Status-3	0x000F	0x0000 ~0xFFFF		E
CM-34	Para Status-4	0x0000	0x0000 ~0xFFFF		E
CM-35	Para Status-5	0x0000	0x0000 ~0xFFFF		E
CM-36	Para Status-6	0x0000	0x0000 ~0xFFFF		E
CM-37	Para Status-7	0x0000	0x0000 ~0xFFFF		E
CM-38	Para Status-8	0x0000	0x0000 ~0xFFFF		E
CM-49	Out Instance	1	0~11	CIP Output Instance	E
CM-50	Para Ctrl Num	2	0~8	Automatically set up according to the CIP Output Instance.	E
CM-51	Para Control-1	0x0005	0x0000 ~0xFFFF	Client set up the reference Inverter Data Address.	E
CM-52	Para Control-2	0x0006	0x0000 ~0xFFFF		E
CM-53	Para Control-3	0x0000	0x0000 ~0xFFFF		E
CM-54	Para Control-4	0x0000	0x0000 ~0xFFFF		E
CM-55	Para Control-5	0x0000	0x0000 ~0xFFFF		E
CM-56	Para Control-6	0x0000	0x0000 ~0xFFFF		E
CM-57	Para Control-7	0x0000	0x0000 ~0xFFFF		E
CM-58	Para Control-8	0x0000	0x0000 ~0xFFFF		E
CM-94	Comm Update	0	0:NO 1:YES	Update communication relating to keypad parameters.	M/E

4.1 FBus S/W Ver (CM-06)

CM-06 automatically indicates the version of the communication module presently installed in the S100.

4.2 FBus Led (CM-09)

① Modbus/TCP

ON/OFF state of 4LEDs in S100 Ethernet communication module is displayed at keypad parameter CM-05.
If you check CM-09 FBus LED with Keypad, 4 bits can be seen according to the order of LED of CM-05 (Left -> Right) CPU, ERR, SPEED and LINK LED.
When LED is ON, the bit becomes 1 and when OFF, it becomes 0.

(Ex. CM-09 LED)

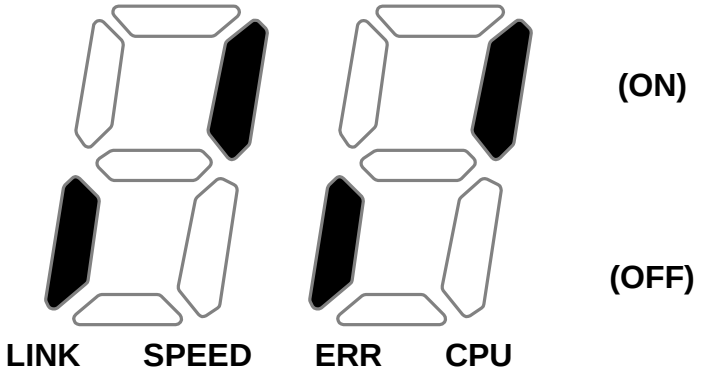

LINK LED	SPEED LED	ERR LED	CPU LED
OFF	ON	OFF	ON

② Ethernet/IP

It represents the ON/OFF status of the 2 LEDs on the right side among the 4 LEDs on the keypad parameter CM-09. 4bits can be displayed in CM-09 FBus Led by using keypad. The data lists of CM-09 are shown as below. When LED turns on, each bit becomes 1, and vice versa. Ethernet communication module has MS LED and NS LED only, but 4 LEDs are shown from CM-09 (FBus LED) using keypad.
It displays the information of NS LED Red, NS LED Green, MS LED Red and MS LED Green in the order of CM-09 LEDs (Right ➔ Left).
If CM-09 is displayed as below, it indicates that NS LED is currently Green and MS LED is Green.

(Ex. CM-09 LED)

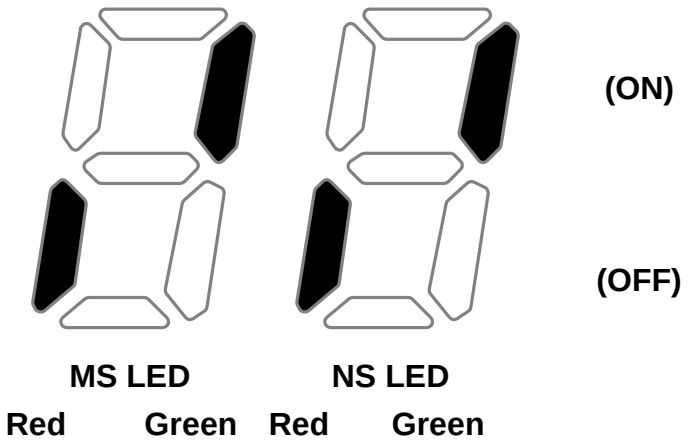

MS LED(Red)	MS LED(Green)	NS LED(Red)	NS LED(Green)
OFF	ON	OFF	ON

4.3 IP Address, Subnet Mask, Gateway (CM-10~21) Setting

The IP ver. supported by Ethernet Module is v4.
All the addresses and maskes are expressed with (decimal).(decimal).(decimal).(decimal) and each decimal number is within 0~255.
In Ethernet communication Module, decimal numbers can be entered in Opt Parameter directly. Each Opt Parameters has the value 0 through 255, which is implemented with each field of addresses divided with '.'.

Ex) To set up IP Address 196.168.10.131, enter the Opt Parameter as shown in the table below.

Code Number	The name of Parameter	입력 값
CM-10	Opt Para-1	196
CM-11	Opt Para-2	168
CM-12	Opt Para-3	10
CM-13	Opt Para-4	131

4.4 Ethernet Speed (CM-22)

Ethernet speed can be set up within the range of 0~2

Set Value	Speed
0	Set the speed automatically
1	100Mbps
2	10Mbps

Automatic speed setting function automatically sets up the highest speed in the network.

4.5 CIP Input Instance(CM-29)

This parameter is displayed when the protocol setting is the Ethernet/IP. It sets up the data format of the inverter status sent from the inverter to the Client (Originator) during the I/O communication module of the CIP (Common Industrial Protocol). Refer to the Assembly Object of the Ethernet/IP.

Set Value	Input Instance Value	Data Size	The number of Parameter
0	70	4	X
1	71	4	X
2	110	4	X
3	111	4	X
4	141	2	1
5	142	4	2
6	143	6	3
7	144	8	4
8	145	10	5
9	146	12	6
10	147	14	7
11	148	16	8

4.6 CIP Output Instance(CM-49)

This parameter is displayed only when protocol sets to Ethernet/IP. It sets up the data format of the inverter command sent from the Client (Originator) to control the inverter during the I/O communication module of the CIP (Common Industrial Protocol). Refer to the Assembly Object of the Ethernet/IP.

Set Value	Output Instance Value	Data Size	The number of Parameter
0	20	4	X
1	21	4	X
2	100	4	X
3	101	4	X
4	121	2	1
5	122	4	2
6	123	6	3
7	124	8	4
8	125	10	5
9	126	12	6
10	127	14	7
11	128	16	8

4.7 Para Status (CM-30~38)

This parameter is not used in case of Modbus TCP. This parameter appears only when the value of the Input Instance (COM-17) in the Ethernet IP is set to 4 or above and Comm Update(CM-94:YES) is done. COM-30 Para Status Num cannot be set up but the number of the parameters of the settled instance is shown. Enter the address of the inverter data sent for the reference data of the Client (Originator) at the same number as that of the set parameters in the COM-31~38.

4.8 Para Control (CM-50~58)

This parameter is not used in case of Modbus TCP.
This parameter appears only when the set value of the Output Instance (COM-18) in the Ethernet IP is 4 or above and Comm Update(CM-94:YES) is done.COM-50 Para Ctrl Num cannot be set up but the number of the parameters of the settled instance is shown. Enter the address of the inverter data used for the reference data of the Client (Originator) at the same number as that of the set parameters in the COM-51~58.

4.9 Comm Update (CM-94)

When power is plugged, Communication Module Parameters have the values which were set before. If the parameter is changed, the value is not applied immediately. If Comm Update is set to 1(Yes), the value is applied to Ethernet Communication Module immediately and this only restarts Ethernet Communication.

5. Modbus/TCP

5.1 Modbus/TCP Frame Structure

MBAP Header(7 bytes)	PDU (5 bytes ~)

Generally, Ethernet uses Ethernet II Frame.

[MODBUS Application Protocol Header (MBAP Header)]

Header	Length	Description
Transaction Identifier	2 Bytes	It is increased by 1 each time as an unique transmitting number when Data Frame is sent from Client to Server.
Protocol Identifier	2 Bytes	Fixed as 0
Length	2 Bytes	It is Modbus Data Frame length which means the length by Byte from MBAP Header to Unit Identifier.
Unit Identifier	1 Bytes	When Modbus/TCP and Modbus/RTU are connected by Gate, Slave number is written. When Modbus/TCP is only used, it is fixed as 0xFF.

Protocol Data Unit (PDU): AS an actual Data of Modbus/TCP, It is composed of Function Code and Data.

5.2 Function Code Description

Modbus/TCP can be divided into Client and Server. Client gives the command and Server responds to the command. Generally, as Client, there are PLC, HMI and PC so on, and Server means inverter.

5.3 Read Holding Register

It is a function for reading data from inverter (Server).

5.3.1 Frame configuration requiring to Server from Client

Required Frame	Length	Value
Function Code	1 Bytes	0x03
Comm. Address	2 Bytes	0x0000 ~ 0xFFFF
Required Data Number	2 Bytes	1~16

5.3.2 Frame configuration responding to Master from Server

Responded Frame	Length	Value
Function Code	1 Bytes	0x03
Comm. Address	1 Bytes	2 x Required Data Number
Required Data Number	Required Data Number x 2 Bytes	The required data number according to the number of communication address

5.4 Read Input Register

It is a function for reading data from Inverter (Server).

5.4.1 Frame configuration requiring to Server from Client

Required Frame	Length	Value
Function Code	1 Bytes	0x04
Comm. Address	2 Bytes	0x0000 ~ 0xFFFF
Required Data Number	2 Bytes	1~16

5.4.2 Frame configuration responding to Master from Server

Required Frame	Length	Value
Function Code	1 Bytes	0x04
Comm. Address	1 Bytes	2 x Required Data Number
Required Data Number	Required Data Number x 2 Bytes	The required data number according to the number of communication address

5.5 Write Single Register

It is a function for modifying a data of Inverter (Server).

5.5.1 Frame configuration requiring to Server from Client

Required Frame	Length	Value
Function Code	1 Bytes	0x06
Comm. Address	2 Bytes	0x0000 ~ 0xFFFF
Required Data Number	2 Bytes	0x0000 ~ 0xFFFF

5.5.2 Frame configuration responding to Master from Server

Required Frame	Length	Value
Function Code	1 Bytes	0x06
Comm. Address	2 Bytes	0x0000 ~ 0xFFFF
Required Data Number	2 Bytes	0x0000 ~ 0xFFFF

5.6 Write Multiple Register

It is a function for modifying the consecutive data of inverter (Server) from 1 up to 16.

5.6.1 Frame configuration requiring to Server from Client

Required Frame	Length	Value
Function Code	1 bytes	0x10
Comm. Address	2 bytes	0x0000 ~ 0xFFFF
Modifying data number	2 bytes	1~16
Byte Count	1 bytes	2 X Number of data
Data value to be modified	Number of data x 2 bytes	Data for modifying

5.6.2 Frame configuration responding to Master from Server

Required Frame	Length	Value
Function Code	1 Bytes	0x10
Comm. Address	2 Bytes	0x0000 ~ 0xFFFF
Modifying Data number	2 Bytes	1~16

5.7 Except Frame

It is a responding frame from server in case of an error that happens when it sends the required frame from Client.

5.8 Exception Frame Structure

Error Frame	Length	Value
Error Code	1bytes	0x80 + Function Code that client requires
Exception Code	1bytes	0x0000 ~ 0xFFFF

5.9 Exception Code Type

Type	Code	Description
ILLEGAL FUNCTION	0x01	In case non-supported Function is required.
ILLEGAL DATA ADDRESS	0x02	Unused address is required or to be modified.
ILLEGAL DATA VALUE	0x03	The modified data exceeds the permitted range when it needs to modify the data.
SLAVE DEVICE FAILURE	0x04	In case there is an error in server (Communication failure with inverter, Initialization failure, Communication failure between inverter and Data)
SLAVE DEVICE BUSY	0x06	In case the server can’t respond due to other process (such as Inverter parameter initialization or module initialization setting)
WRITE PERMITION ERROR	0x20	In case the value cannot be modified because the value is prohibited to modify.

6. Ethernet/IP

6.1 Basic protocol configuration

The Ethernet/IP is a protocol implemented with the CIP (Common Industrial Protocol), defined by the ODVA, by using TCP and UDP.

※Originator: It is the device requesting connection, called Client. The device represents a PLC or a scanner.
※Target : It is the device responded to the connection, called Server. The device represents an Inverter.

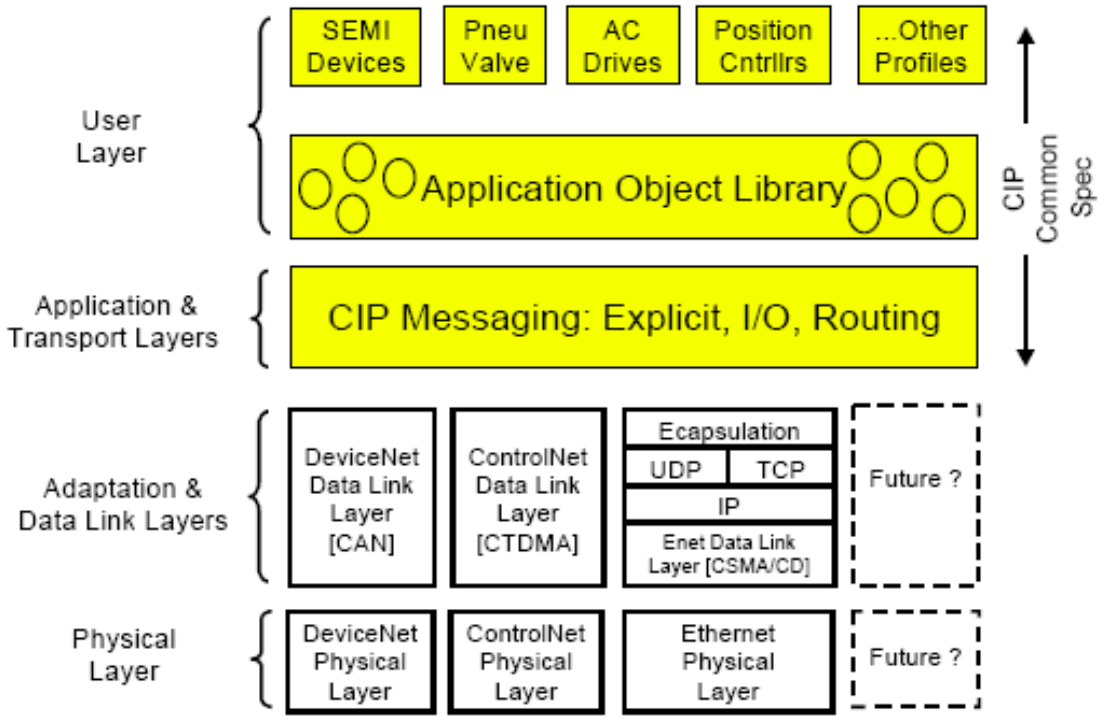

6.2 Implicit Message

The Implicit Message is also called I/O Message, which is the data communicated between the Client (Originator) and Server (Target) at preset period by the Input Instance and Output Instance. The connection is in Class 1 Connection

① Supported range

- Transport Type
  1. Originator->Target: Point to Point
  2. Target->Originator: Multicast

- Transport Trigger: Cyclic

- Configuration Connection: 1

- Connection Tag: Not supported

- Priority
  1. Originator->Target: Scheduled
  2. Target->Originator: Scheduled
  3. Configuration Data: Not supported

② Input Instance

The data of the Inverter status periodically sent from the Inverter to PLC or a Client device.

Instance	Byte	Bit 7	Bit 6	Bit 5	Bit 4	Bit 3	Bit 2	Bit 1	Bit 0
70	0						Running 1 (Fwd)		Faulted
	1								
	2	Speed Actual (Low Byte) – RPM unit (note 1)							
	3	Speed Actual (High Byte) – RPM unit							
71	0	At Reference	Ref From Net	Ctrl From Net	Ready	Running 2 (Rev)	Running 1 (Fwd)	Warning	Faulted
	1	Drive State							
	2	Speed Actual (Low Byte) – RPM unit							
	3	Speed Actual (High Byte) – RPM unit							
110	0						Running 1 (Fwd)		Faulted
	1								
	2	Speed Actual (Low Byte) – Hz unit (note 1)							
	3	Speed Actual (High Byte) – Hz unit							
111	0	At Reference	Ref From Net	Ctrl From Net	Ready	Running 2 (Rev)	Running 1 (Fwd)	Warning	Faulted
	1	Drive State							
	2	Speed Actual (Low Byte) – Hz unit							
	3	Speed Actual (High Byte) – Hz unit							
141	0	Status Parameter - 1 data (Low Byte)							
	1	Status Parameter - 1 data (Hi Byte)							
142	0	Status Parameter - 1 data (Low Byte)							
	1	Status Parameter - 1 data (Hi Byte)							
	2	Status Parameter - 2 data (Low Byte)							
	3	Status Parameter - 2 data (Hi Byte)							
143	0	Status Parameter - 1 data (Low Byte)							

Instance	Byte	Bit 7	Bit 6	Bit 5	Bit 4	Bit 3	Bit 2	Bit 1	Bit 0
	1	Status Parameter - 1 data (Hi Byte)							
	2	Status Parameter - 2 data (Low Byte)							
	3	Status Parameter - 2 data (Hi Byte)							
	4	Status Parameter - 3 data (Low Byte)							
	5	Status Parameter - 3 data (Hi Byte)							
144	0	Status Parameter - 1 data (Low Byte)							
	1	Status Parameter - 1 data (Hi Byte)							
	2	Status Parameter - 2 data (Low Byte)							
	3	Status Parameter - 2 data (Hi Byte)							
	4	Status Parameter - 3 data (Low Byte)							
	5	Status Parameter - 3 data (Hi Byte)							
	6	Status Parameter - 4 data (Low Byte)							
	7	Status Parameter - 4 data (Hi Byte)							
145	0	Status Parameter - 1 data (Low Byte)							
	1	Status Parameter - 1 data (Hi Byte)							
	2	Status Parameter - 2 data (Low Byte)							
	3	Status Parameter - 2 data (Hi Byte)							
	4	Status Parameter - 3 data (Low Byte)							
	5	Status Parameter - 3 data (Hi Byte)							
	6	Status Parameter - 4 data (Low Byte)							
	7	Status Parameter - 4 data (Hi Byte)							
	8	Status Parameter - 5 data (Low Byte)							
	9	Status Parameter - 5 data (Hi Byte)							
146	0	Status Parameter - 1 data (Low Byte)							
	1	Status Parameter - 1 data (Hi Byte)							
	2	Status Parameter - 2 data (Low Byte)							
	3	Status Parameter - 2 data (Hi Byte)							
	4	Status Parameter - 3 data (Low Byte)							
	5	Status Parameter - 3 data (Hi Byte)							
	6	Status Parameter - 4 data (Low Byte)							
	7	Status Parameter - 4 data (Hi Byte)							
	8	Status Parameter - 5 data (Low Byte)							

Instance	Byte	Bit 7	Bit 6	Bit 5	Bit 4	Bit 3	Bit 2	Bit 1	Bit 0
	9	Status Parameter - 5 data (Hi Byte)							
	10	Status Parameter - 6 data (Low Byte)							
	11	Status Parameter - 6 data (Hi Byte)							
147	0	Status Parameter - 1 data (Low Byte)							
	1	Status Parameter - 1 data (Hi Byte)							
	2	Status Parameter - 2 data (Low Byte)							
	3	Status Parameter - 2 data (Hi Byte)							
	4	Status Parameter - 3 data (Low Byte)							
	5	Status Parameter - 3 data (Hi Byte)							
	6	Status Parameter - 4 data (Low Byte)							
	7	Status Parameter - 4 data (Hi Byte)							
	8	Status Parameter - 5 data (Low Byte)							
	9	Status Parameter - 5 data (Hi Byte)							
	10	Status Parameter - 6 data (Low Byte)							
	11	Status Parameter - 6 data (Hi Byte)							
	12	Status Parameter - 7 data (Low Byte)							
	13	Status Parameter - 7 data (Hi Byte)							
148	0	Status Parameter - 1 data (Low Byte)							
	1	Status Parameter - 1 data (Hi Byte)							
	2	Status Parameter - 2 data (Low Byte)							
	3	Status Parameter - 2 data (Hi Byte)							
	4	Status Parameter - 3 data (Low Byte)							
	5	Status Parameter - 3 data (Hi Byte)							
	6	Status Parameter - 4 data (Low Byte)							
	7	Status Parameter - 4 data (Hi Byte)							
	8	Status Parameter - 5 data (Low Byte)							
	9	Status Parameter - 5 data (Hi Byte)							
	10	Status Parameter - 6 data (Low Byte)							
	11	Status Parameter - 6 data (Hi Byte)							
	12	Status Parameter - 7 data (Low Byte)							
	13	Status Parameter - 7 data (Hi Byte)							
	14	Status Parameter - 8 data (Low Byte)							
	15	Status Parameter - 8 data (Hi Byte)							

The table below presents the description of the bit data for the 0, 1 byte of 70, 71, 110, 111.

Name	Description	Related Attribute	
		Class	Attr. ID
Faulted	Inverter Error	0x29	10
Warning	Not Supported	0x29	11
Running1	Motor is running Forward	0x29	7
Running2	Motor is running Reverse	0x29	8
Ready	Motor is ready to running	0x29	9
Ctrl From Net	Run/Stop control	0x29	15
Ref From Net	Speed control	0x2A	29
At Reference	Reach at reference Speed	0x2A	3
Drive State	Current Motor State	0x29	6
Speed Actual	Speed Command	0x2A	7

③ Output Instance

The command data sent from PLC or a Client device to the Inverter, on periodical frequency.

.

Instance	Byte	Bit 7	Bit 6	Bit 5	Bit 4	Bit 3	Bit 2	Bit 1	Bit 0
20	0						Fault Reset		Run Fwd
	1	0							
	2	Speed Reference (Low Byte) – RPM unit							
	3	Speed Reference (High Byte) – RPM unit							
21	0		NetRef (note2)	NetCtrl (note2)			Fault Reset	Run Rev	Run Fwd
	1	0							
	2	Speed Reference (Low Byte) – RPM unit							
	3	Speed Reference (High Byte) – RPM unit							
100	0						Fault Reset		Run Fwd
	1	0							
	2	Speed Reference (Low Byte) – Hz unit							
	3	Speed Reference (High Byte) – Hz unit							
101	0		NetRef	NetCtrl			Fault Reset	Run Rev	Run Fwd
	1	0							
	2	Speed Reference (Low Byte) – Hz unit							
	3	Speed Reference (High Byte) – Hz unit							
121	0	Control Parameter - 1 data (Low Byte)							
	1	Control Parameter - 1 data (Hi Byte)							
122	0	Control Parameter - 1 data (Low Byte)							
	1	Control Parameter - 1 data (Hi Byte)							

Instance	Byte	Bit 7	Bit 6	Bit 5	Bit 4	Bit 3	Bit 2	Bit 1	Bit 0
	2	Control Parameter - 2 data (Low Byte)							
	3	Control Parameter - 2 data (Hi Byte)							
123	0	Control Parameter - 1 data (Low Byte)							
	1	Control Parameter - 1 data (Hi Byte)							
	2	Control Parameter - 2 data (Low Byte)							
	3	Control Parameter - 2 data (Hi Byte)							
	4	Control Parameter - 3 data (Low Byte)							
	5	Control Parameter - 3 data (Hi Byte)							
124	0	Control Parameter - 1 data (Low Byte)							
	1	Control Parameter - 1 data (Hi Byte)							
	2	Control Parameter - 2 data (Low Byte)							
	3	Control Parameter - 2 data (Hi Byte)							
	4	Control Parameter - 3 data (Low Byte)							
	5	Control Parameter - 3 data (Hi Byte)							
	6	Control Parameter - 4 data (Low Byte)							
	7	Control Parameter - 4 data (Hi Byte)							
125	0	Control Parameter - 1 data (Low Byte)							
	1	Control Parameter - 1 data (Hi Byte)							
	2	Control Parameter - 2 data (Low Byte)							
	3	Control Parameter - 2 data (Hi Byte)							
	4	Control Parameter - 3 data (Low Byte)							
	5	Control Parameter - 3 data (Hi Byte)							
	6	Control Parameter - 4 data (Low Byte)							
	7	Control Parameter - 4 data (Hi Byte)							
	8	Control Parameter - 5 data (Low Byte)							
	9	Control Parameter - 5 data (Hi Byte)							
126	0	Control Parameter - 1 data (Low Byte)							
	1	Control Parameter - 1 data (Hi Byte)							
	2	Control Parameter - 2 data (Low Byte)							
	3	Control Parameter - 2 data (Hi Byte)							
	4	Control Parameter - 3 data (Low Byte)							
	5	Control Parameter - 3 data (Hi Byte)							
	6	Control Parameter - 4 data (Low Byte)							
	7	Control Parameter - 4 data (Hi Byte)							

Instance	Byte	Bit 7	Bit 6	Bit 5	Bit 4	Bit 3	Bit 2	Bit 1	Bit 0
	8	Control Parameter - 5 data (Low Byte)							
	9	Control Parameter - 5 data (Hi Byte)							
	10	Control Parameter - 6 data (Low Byte)							
	11	Control Parameter - 6 data (Hi Byte)							
127	0	Control Parameter - 1 data (Low Byte)							
	1	Control Parameter - 1 data (Hi Byte)							
	2	Control Parameter - 2 data (Low Byte)							
	3	Control Parameter - 2 data (Hi Byte)							
	4	Control Parameter - 3 data (Low Byte)							
	5	Control Parameter - 3 data (Hi Byte)							
	6	Control Parameter - 4 data (Low Byte)							
	7	Control Parameter - 4 data (Hi Byte)							
	8	Control Parameter - 5 data (Low Byte)							
	9	Control Parameter - 5 data (Hi Byte)							
	10	Control Parameter - 6 data (Low Byte)							
	11	Control Parameter - 6 data (Hi Byte)							
	12	Control Parameter - 7 data (Low Byte)							
	13	Control Parameter - 7 data (Hi Byte)							
128	0	Control Parameter - 1 data (Low Byte)							
	1	Control Parameter - 1 data (Hi Byte)							
	2	Control Parameter - 2 data (Low Byte)							
	3	Control Parameter - 2 data (Hi Byte)							
	4	Control Parameter - 3 data (Low Byte)							
	5	Control Parameter - 3 data (Hi Byte)							
	6	Control Parameter - 4 data (Low Byte)							
	7	Control Parameter - 4 data (Hi Byte)							
	8	Control Parameter - 5 data (Low Byte)							
	9	Control Parameter - 5 data (Hi Byte)							
	10	Control Parameter - 6 data (Low Byte)							
	11	Control Parameter - 6 data (Hi Byte)							
	12	Control Parameter - 7 data (Low Byte)							
	13	Control Parameter - 7 data (Hi Byte)							
	14	Control Parameter - 8 data (Low Byte)							
	15	Control Parameter - 8 data (Hi Byte)							

The table below presents the data description of the 0Byte of 20, 21, 100 and 101.

Name	Description	Related Attribute	
		Class	Attr. ID
Run Fwd note1)	Forward Run Command	0x29	3
Run Rev note1)	Reverse Run Command	0x29	4
Fault reset note1)	Fault Reset Command	0x29	12
NetRef note2)	Not used	0x2A	4
NetCtrl note2)	Not used	0x29	5
Speed Reference	Speed Command	0x2A	8

note1) refer to the Drive Run and Fault in the Control Supervisor Object (Class 0x29).

note2) the setting of the Reference Control and Run/Strop Control can be made only by the LCD Control Panel. Therefore, NetRef and NetCtrl are not used at the Instances 21 and 101.

.

6.3 Explicit Message

A non-periodic communication method used for reading or writing the attribute value of the Inverter or Ethernet/IP.
The UCMM method which can communicate data between Originator and Target without connection, and a periodic data communication method using Class 3 Connection are available.

6.4 Supported Object

① Identity Object (Class 0x01, Instance 1)

[Attribute]

Attribute ID	Access	Attribute Name	Data Length	Attribute Value
1	Get	Vendor ID (LS Industrial systems)	Word	259
2	Get	Device Type (AC Drive)	Word	2
3	Get	Product Code	Word	10 note1)
4	Get	Low Byte - Major revision High Byte - Minor revision	Word	note2) 0x0102
5	Get	Status	Word	note3)
6	Get	Serial Number	Double Word	note4)
7	Get	Product Name	12 Byte	S100 Ethernet

note1) Product code ‘6’ means S100 AC drive.

note2) The Upper and Lower byte represent the Major Revision and Minor Revision, respectively. For example, 0x0102 means 2.01. The version of the Ethernet communication is indicated in the Keypad CM- 6 FBus S/W Ver.

note3) Definition of each bit of status.

Bit	Definition
0	0: Device is not connected to Master. 1: Device is connected to Master.
1	Reserved
2	Configured (always ‘0’ since LSIS Ethernet/IP is not supported.)
3	Reserved
4	0 : Unknown 2: in case of incorrect I/O connection. 3: in case of no previous I/O connection at all. 5: Major Fault 6: I/O in connection.
5	
6	
7	
8	Minor Recoverable Fault (In case of Warning state of inverter)
9	Minor Unrecoverable Fault (N/A)
10	Major Recoverable Fault (In case of H/W trip state of inverter)
11	Major Unrecoverable Fault (In case of trip state except for H/W trip of inverter)

note4) Serial number is made by last four numbers of MAC ID. For example, if MAC ID is 00:0B:29:00:00:22, Serial number will be 0x29000022

[Service]

Service Code	Definition	Support for Class	Support for Instance
0x0E	Get Attribute Single	No	Yes
0x05	Reset	No	Yes
0x10	Set Attribute Single	No	Yes

② Motor Data Object (Class 0x28, Instance 1)

[Attribute]

Attribute ID	Access	Attribute Name	Range	Definition
3	Get	Motor Type	0~10	0 : Non-standard motor 1 : PM DC Motor 2 : FC DC Motor 3 : PM Synchronous Motor 4 : FC Synchronous Motor 5 : Switched Reluctance Motor 6 : Wound Rotor Induction Motor 7 : Squirrel Cage Induction Motor 8 : Stepper Motor 9 : Sinusoidal PM BL Motor 10 : Trapezoidal PM BL Motor
6	Get/Set	Motor Rated Current	0.0~1 000.0	[Get] Read Rated Current of bA-13. [Set] The setting value is reflected on Rated Current of bA-13 Scale: 0.1
7	Get/Set	Motor Rated Voltage	0~ 690	[Get] Read Rated Voltage of bA-15 [Set] The setting value is reflected on Rated Voltage of bA-15 Scale: 1

[Service]

Service Code	Definition	Support for Class	Support for Instance
0x0E	Get Attribute Single	No	Yes
0x10	Set Attribute Single	No	Yes

③ Control Supervisor Object (Class 0x29, Instance 1)

[Attribute]

Attribute ID	Access	Attribute Name	Range	Definition
3	Get / Set	Forward Run Cmd.	0	Stop
			1	Operation in normal direction (Note1)
4	Get / Set	Reverse Run Cmd.	0	Stop
			1	Operation in reverse direction (Note1)
5	N/A	Net Control	-	Can be set up as Inverter parameter only.
6	Get	Drive State	0	Vendor specific
			1	Startup
			2	Not Ready (resetting)
			3	Ready (stopping)
			4	Enabled (running, except decelerating to stop)
			5	Stopping (decelerating to stop)
			6	Fault Stop
			7	Faulted (tripped)
7	Get	Running Forward	0	Stopping
			1	Operating in normal direction

Attribute ID	Access	Attribute Name	Range	Definition
8	Get	Running Reverse	0	Stopping
			1	Operating in reverse direction
9	Get	Drive Ready	0	Being reset or tripped
			1	Normal condition for Inverter operation
10	Get	Drive Fault	0	Presently not tripped
			1	Presently being tripped.
12	Get / Set	Drive Fault Reset	0	Trip Reset after a trip. Reset can be done only when TRUE is inputted in FALSE status (Note2).
			1	
13	Get	Drive Fault Code		See the Drive Fault Code Table below (Note2).
14	Get	Control From Net.	0	Provide operation reference through a source other than FieldBus communication.
			1	Provide operation reference through FieldBus communication source.

(Note1) Drive Run Command
It is inverter operation using Forward Run Cmd. and Reverse Run Cmd.

Run1	Run2	Trigger Event	Run Type
0	0	Stop	NA
0 -> 1	0	Run	Run1
0	0 -> 1	Run	Run2
0 -> 1	0 -> 1	No Action	NA
1	1	No Action	NA
1->0	1	Run	Run2
1	1->0	Run	Run1

In the above table, Run1 stands for the Forward Run Cmd. and Run 2 stands for the Reverse Run Cmd. In other words, the Option gives an operation reference to the Inverter at the moment of change from 0(FALSE) to 1(TRUE). When the Forward Run Cmd. value has been read, it does not represent the present operation status of the Inverter, but the operation command value of the Option.

(Note2) Drive Fault
If the Inverter is tripped, the Drive Fault becomes TRUE.
At this time, the Drive Fault Codes are as follow;

[Drive Fault Code]

Fault Code Number	Description
0x0000	None
0x1000	Ethermal Out Phase Open InverterOLT InPhaseOpen ThermalTrip UnderLoad ParaWriteTrip IOBoardTrip PrePIDFail OptionTrip1 OptionTrip2 OptionTrip3 LostCommand UNDEFINED LostKeypad
0x2200	OverLoad
0x2310	OverCurrent1
0x2330	GFT
0x2340	OverCurrent2
0x3210	OverVoltage
0x3220	LowVoltage
0x2330	GroundTrip
0x4000	NTCOpen
0x4200	OverHeat
0x5000	FuseOpen HWDiag
0x7000	FanTrip
0x7120	No Motor Trip
0x7300	EncorderTrip
0x8401	SpeedDevTrip
0x8402	OverSpeed
0x9000	ExternalTrip BX

[Drive Fault Reset]

At 0 → 1 (FALSE → TRUE), the Drive Fault Reset gives TRIP RESET reference to Inverter. Overwriting 1 (TRUE) on 1 (TRUE) does not generate RESET reference to the Inverter trip. To send RESET reference from Option to Inverter in 1 (TRUE) status, write 0 (FAULT) and then write 1(TRUE) again.

[Service]

Service Code	Definition	Support for Class	Support for Instance
0x0E	Get Attribute Single	No	Yes
0x10	Set Attribute Single	No	Yes

④ AC Drive Object (Class 0x2A, Instance 1)

[Attribute]

Attribute ID	Access	Attribute Name	Range	Definition
3	Get	At Reference	0	Means that the output frequency has not reached the set up frequency, yet.
			1	Means that the output frequency has reached the set up frequency.
4	Not supported	Net Reference	-	-
6	Get	Drive Mode (Note1)	0	Vendor Specific Mode
			1	Open Loop Speed(Frequency)
			2	Closed Loop Speed Control
			3	Torque Control

Attribute ID	Access	Attribute Name	Range	Definition
			4	Process Control (e.g. PI)
7	Get	Speed Actual	0~ 24000	Displayed present output frequency in [rpm] unit.
8	Get/Set	Speed Ref	0~ 24000	Give reference after converting the target frequency in [rpm] unit. For this, the DRV-07 Freq Ref Src must have been set up to FieldBus.
9	Get	Actual Current	0~111.0 A	Monitor present current by 0.1 A unit basis.
29	Get	Ref.From Network	0	The frequency reference source is not the FieldBus communication.
			1	The frequency reference source is the FieldBus communication.
100	Get	Actual Hz	0~400.00 Hz	Monitor present operating frequency by Hz unit.
101	Get/Set	Reference Hz	0~400.00 Hz	When the dr-07 Freq Ref Src is set to FieldBus, the reference frequency can be set up by communication.
102	Get/Set	Acceleration Time (Note2)	0~6000.0 sec	Set-up/monitor Inverter acceleration time.
103	Get/Set	Deceleration Time (Note3)	0~6000.0 sec	Set-up/monitor Inverter deceleration time.

(Note1) It is related with dr-10 Torque Control and AP-01 App mode. If the dr-10 Torque Control is set to ‘Yes,’ Drive Mode becomes “Torque Control,” and if AP-01 App mode is set to Proc PID, the Drive Mode becomes “Process Control (e.g.PI).”

(Note2) dr-03: Acc Time value.

(Note3) dr-04: Dec Time value.

[Service]

Service Code	Definition	Support for Class	Support for Instance
0x0E	Get Attribute Single	No	Yes
0x10	Set Attribute Single	No	Yes

⑤ Class 0x64 (Inverter Object) – Manufacture Profile

This is the object to access Keypad Parameters of the Inverter.

[Attribute]

Instance	Access	Attribute Number	Attribute Name	Attribute Value
1 (dr Group)	Get/Set	Identical to S100 Manual Code No.	S100 Keypad Title (Refer to S100 Manual)	Setting range of S100 Parameter (Refer to S100 Manual)
2 (bA Group)				
3 (Ad Group)				
4 (Cn Group)				
5 (In Group)				
6 (OU Group)				
7 (CM Group)				
8 (AP Group)				
9 (Reserved)				
10 (Reserved)				
11 (PRT Group)		Identical to S100 Manual Code No.		
12 (M2 Group)				

[Service]

Service Code	Definition	Support for Class	Support for Instance
0x0E	Get Attribute Single	No	Yes
0x10	Set Attribute Single	No	Yes

7. Lost Command

7.1 Inverter Keypad Parameter

Code Number	Parameter Name	Default	Set Value	Description
Pr-12	Lost Cmd Mode	"None"	"None" "Free-Run" "Dec" "Hold Input" "Hold Output" "Lost Preset"	If Lost Command occurs, sets up the Inverter action. (Note1)
Pr-13	Lost Cmd Time	1.0	0.1~120.0 sec	Sets up Lost Command occurrence time
Pr-14	Lost Preset F	0	0~600.00 Hz	Sets up speed of Lost Preset

(Note1) Lost Command Mode

Set Value	Function
"None"	Maintains the previous status.
"Free-Run"	Lost Command Trip occurs and Free Run stops.
"Dec"	Lost Command Trip occurs and stops by Trip deceleration time.
"Hold Input"	Lost Command Warning occurs and operates by the previous operation reference.
"Hold Output"	Lost Command Warning occurs and operates at the previous operation speed.
"Lost Preset"	Lost Command Warning occurs and operates at the speed set up in the Pr-14.

7.1.1 Modbus/TCP Lost Command Status

If the Modbus TCP receives no data from Client for 100msec, the Option becomes Lost Command status, and after the time set up in the Pr-13, the Inverter operates according to the settings in the Pr-12.

7.1.2 Ethernet/IP Lost Command Status

If there is no Implicit Message Connection (Class1 Connection) between the Originator (PLC or Client) and Target (Inverter), the Option becomes Lost Command status, and after the time set up in the Pr-13, the Inverter operates according to the settings in the Pr-12.

Warranty

Maker	LS Industrial Systems Co., Ltd.	Installation (Start-up) Date	
Model No.	CENT-S100	Warranty Period	
Customer Information	Name		
	Address		
	Tel.		
Sales Office (Distributor)	Name		
	Address		
	Tel.		

Warranty period is 12 months after installation or 18 months after manufactured when the installation date is unidentified. However, the guarantee term may vary on the sales term.

IN-WARRANTY service information

If the defective part has been identified under normal and proper use within the guarantee term, contact your local authorized LS distributor or LS Service center.

OUT-OF WARRANTY service information

The guarantee will not apply in the following cases, even if the guarantee term has not expired.

- Damage was caused by misuse, negligence or accident.
- Damage was caused by abnormal voltage and peripheral devices' malfunction (failure).
- Damage was caused by an earthquake, fire, flooding, lightning, or other natural calamities.
- When LS nameplate is not attached.
- When the warranty period has expired.

Revision History

No	Date	Edition	Changes
1	2012.05	First Release	
2	2015.07	2nd Edition	S/W Version up(V2.0)