Thank you for using our **S100 Profibus-DP Communication module**

Safety PRECAUTIONS

- Always follow safety instructions to prevent accidents and potential hazards from occurring.
- Safety precautions are classified into “WARNING” and “CAUTION” and their meanings are as follows:

⚠ WARNING Improper operation may result in serious personal injury or death.

⚠ CAUTION Improper operation may result in slight to medium personal injury or property damage

- The indicated illustrations on the product and in the manual have the following meanings.

⚠ Danger may be present. Read the message and follow the instructions carefully.

⚠ Particular attention should be paid because danger of an electric shock may be present.

- Keep operating instructions handy for quick reference.
- Read the operating instructions carefully to fully understand the functions of the S100 series and to use it properly.

⚠ CAUTION

- **Be cautious, when handling the CMOS components of the communication module.**
  Static may lead to malfunctioning of the product.
- **Turn off the inverter power, when changing the communication cable.**
  Otherwise, you may damage the module or a communication error may occur.
- **Make sure to insert the Communication module connector to the inverter precisely.**
  Otherwise, you may damage the module or a communication error may occur.
- **Check the parameter unit before setting up the parameter.**
  Otherwise, a communication error may occur.

Table of Contents

Chapter 1. Introduction 1

1.1 What is Profibus-DP Communication Module? 1

1.2 Components 1

Chapter 2. Profibus-DP Communication Module 2

2.1 Technical Specification of Profibus-DP Communication 2

2.2 Layout of Profibus-DP Communication Module 3

2.3 General Specification of Profibus-DP Connector 4

2.4 Installation 5

2.5 Network Cable Specifications 7

2.6 Maximum Distance according to the Baud rate 8

Chapter 3. Status Diagnosis and LED Indication 9

3.1 LED display feature 9

3.2 LED information & Troubleshooting 10

Chapter 4. Inverter Parameter 13

4.1 Profibus-DP Communication Parameter List 13

4.2 Description of Profibus-DP Communication Parameters 14

4.2.1 Version of Communication module 14

4.2.2 Station ID setting 14

4.2.3 LED indication for communication status 15

4.2.4 The number of Para Status setting 16

4.2.5 Para Status 1~8 17

4.2.6 Number of Para Control setting 18

4.2.7 Para Control 1~8 19

4.2.8 Comm Update 20

Chapter 5. GSD File (Electronic Data Sheets) 21

Chapter 1. Introduction

This Profibus-DP communication module allows the LSLV-S100 inverter to be connected to Profibus network.
This module does not support IP66 products.

1.1 What is Profibus-DP Communication Module?

A controlling and monitoring of inverter can be controlled by PLC sequence program or a Profibus Master Module.
It helps the installation cost reduced since multiple inverters are implemented by a communication line. In addition, the wiring is so simple that the installation time will be reduced and the maintenance will be improved.
Factory automation can be also easily operated by Mixed-used development of auxiliary devices of PLC and other control systems such as PC for controlling the inverter.

1.2 Components

This product is consisting of these kinds of parts

- Profibus-DP Communication Module(CPDP-S100): 1 ea
- Profibus-DP Communication Module Manual: 1 ea
- Brass Bar(M3xL23): 1 ea
- Brass Bar(M3xL17.3): 1 ea
- Fixed Screw(M3xL8): 1 ea
- Profibus connector: 1 ea

Chapter 2. Profibus-DP Communication Module

2.1 Technical Specification of Profibus-DP Communication

Device Type	Profibus DP Slave
Auto Baud rate Detect	Supported
Synchronization Mode	Supported
Freeze Mode	Supported
Max. Input Length	8 words
Max. Output Length	8 words
Baud rate Support	9.6K, 19.2K, 93.75K, 187.5K, 500K, 1.5M, 3M, 6M, 12M
Modular Station	Supported
Max. Module	2
Max. Connectable Number of Nodes	Max. 32 nodes without repeater (including master module)
LED	3 LEDs (ONLINE, ERR, and CPU)
Communication Connector	9Pin D-sub

Table 1 Technical Data

2.2 Layout of Profibus-DP Communication Module

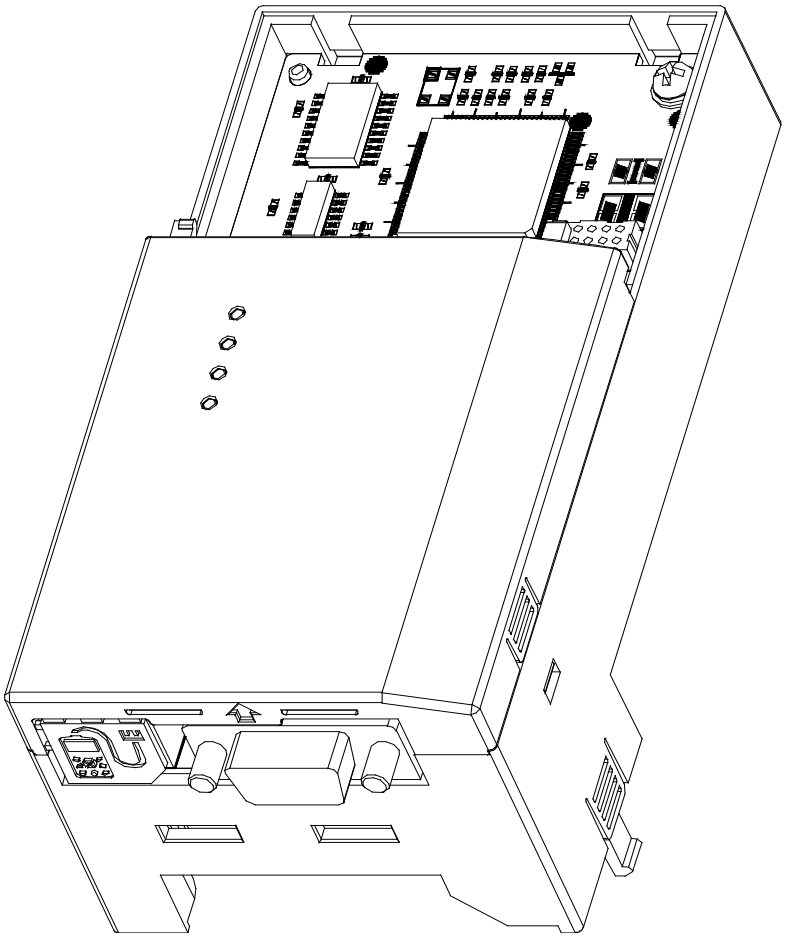

Figure 1 Profibus-DP Communication Module

2.3 General Specification of Profibus-DP Connector

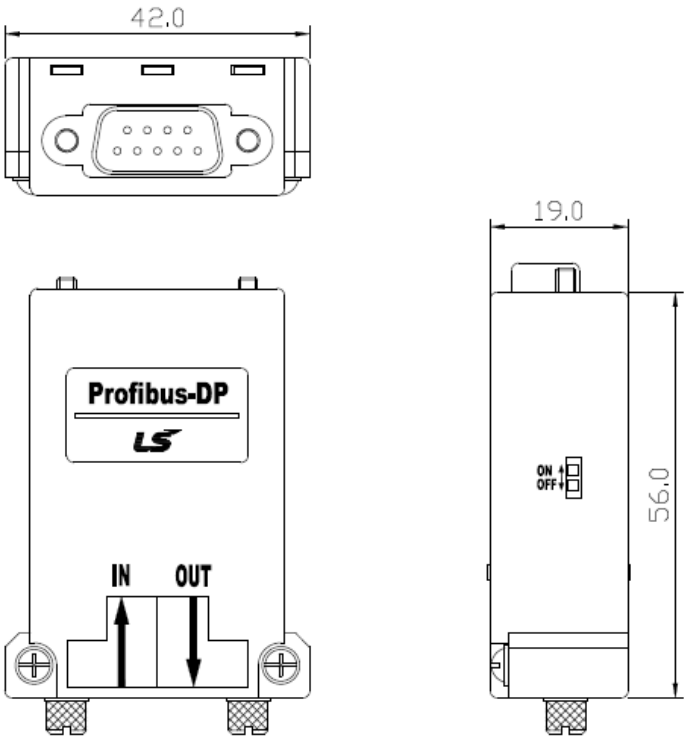

Figure 2 Profibus Connector

PROFIBUS Connector	Pin	Signal	Description
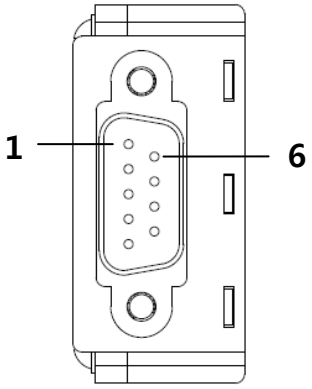	1	None	None
	2	M24	24V output GND
	3	RxD/TxD-P	Transmitter/Receiver data Plus
	4	CTRL-P	Control signal for a repeater
	5	DGND	Signal GND
	6	VP	5V for terminating resistance
	7	P24	24V output Plus
	8	RxD/TxD-N	Transmitter/Receiver data Negative
	9	CTRL-N	Control signal for a repeater

note) The product only provides No.3, 5, 6 and 8 signals.

Table 2 Signal Description

2.4 Installation

Warning) Connect a communication network after the power supply is off. If Profibus-DP communication module is removed or installed, the power supply should be switched off. Otherwise, the S100 inverter will be damaged entirely.
Take off Profibus-DP communication module from the product after the power supply is totally discharged.

■ Unfasten the front cover fixing bolt to remove the front cover and remove I/O cover((1), (2)) from a dedicated inverter for communication.

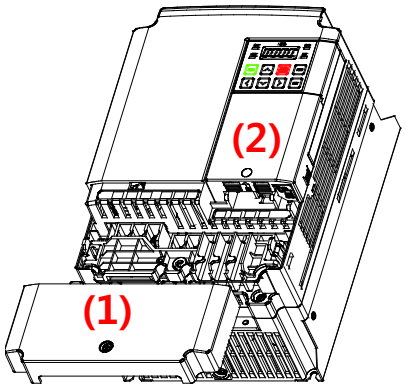

■ Remove the keypad (3).

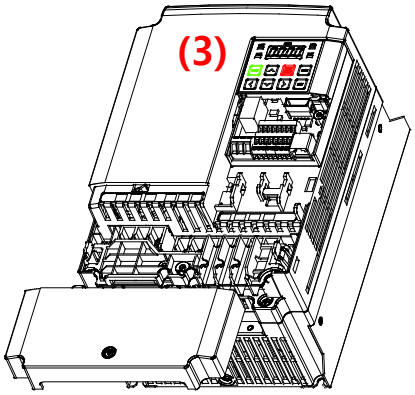

■ Unfasten a screw from I/O board and fasten the prepared brass bar(4).

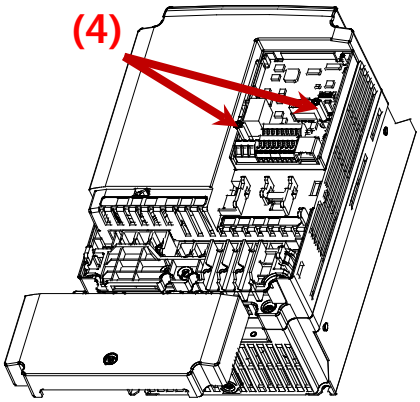

■ Mount Profibus-DP communication Module and fasten the removed screw(6) and the included screw(7).

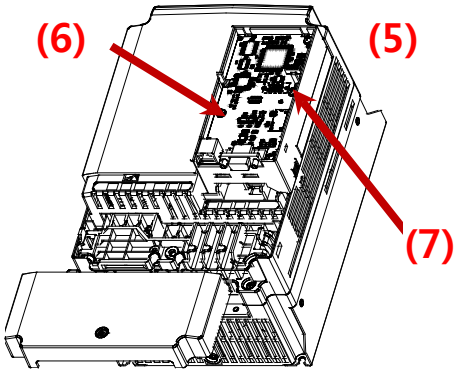

■ Install the keypad (8) at first and the communication module cover(9) in order.

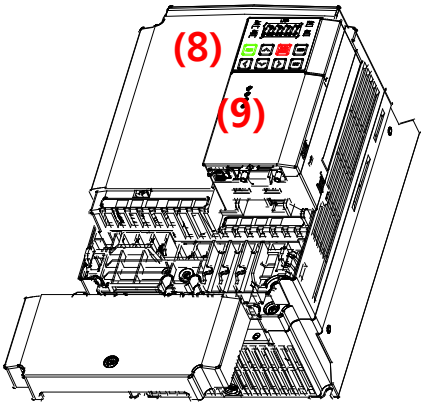

■ Install the front cover(10) again And installation is completed.

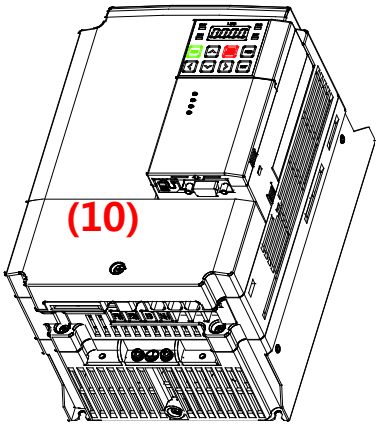

2.5 Network Cable Specifications

Classification	Description	
AWG	22	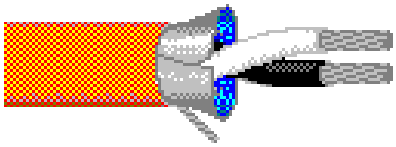
Conductor Material	BC-Bare Copper	
Insulation Material	PE-Polyethylene	
Insulation Tension	0.035 inch	
Inner Shield Material	Aluminum Foil-Polyester, Tape/Braid Shield	
Electrostatic Capacity	8500pF/ft	
Specific Impedance	150Ω	
Total number of Conductors	2 Core	

Table 3 Network Cable Specifications

2.6 Maximum Distance according to the Baud rate

The total BUS length of a network configuration is differed according to the baud rate. The communication quality is not guaranteed when the total distance exceeds the total BUS length limit as below.

Baud rate	Max. Segment Length	Max. Extension Distance
12 Mbps	1,000 m / 3,278 feet	10,000 m / 32,786 feet
6 Mbps	1,000 m / 3,278 feet	10,000 m / 32,786 feet
3 Mbps	1,000 m / 3,278 feet	10,000 m / 32,786 feet
1.5 Mbps	1,000 m / 3,278 feet	10,000 m / 32,786 feet
500 kbps	400 m / 1,311 feet	4,000 m / 13,114 feet
187.5 kbps	200 m / 655 feet	2,000 m / 6,557 feet
93.75 kbps	100 m / 327 feet	1,000 m / 3,278 feet
19.2 kbps	100 m / 327 feet	1,000 m / 3,278 feet
9.6 kbps	100 m / 327 feet	1,000 m / 3,278 feet

Table 4 Maximum Distance according to the Baudrate

AKSA OTOMASYON

Chapter 3. Status Diagnosis and LED Indication

3.1 LED display feature

The profibus DP Module has 3 kinds of LEDs, referring to the below table colored by LEDs for troubleshooting and diagnostics.

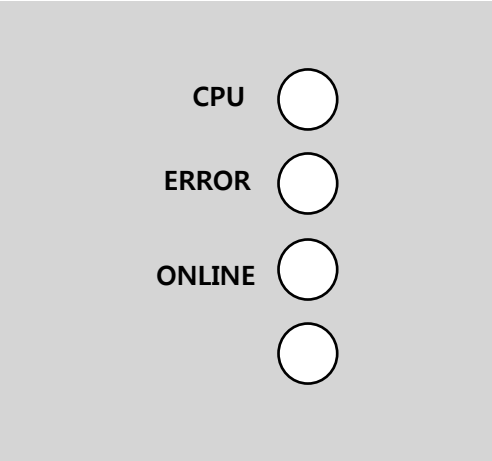

Figure 3 LED display

LED	Color	Description
CPU	Green	LED turns “On” when the communication module is installed on the inverter and the power is generated.
ERR	Red	LED turns “On” if there is something wrong in the Profibus-DP communication module.
ONLINE	Green	LED always turns “On” when Profibus-DP communication module is on-line status.

Table 5 LED Indication

3.2 LED information & Troubleshooting

LED	LED Status	Module Status	Cause	Troubleshooting
CPU	OFF	Failure in power supply	Power supply unplugged or contact failure between the inverter and Profibus-DP module.	Check power supply. Check the inverter's malfunction. Check the connection between Profibus-DP module and the connector of inverter.
	Blinking every second	Normal	Normal operation	-
ERR	OFF	Normal	Normal operation	-
	Blinking every second (with CPU LED together)	The communication is interrupted.	The communication is not available between the inverter and the communication module.	Check inverter's malfunction. Check the connection between Profibus-DP module and the connector of inverter.

	Blinking every second (contrary to CPU LED)	CONFIG ERROR	Master's configuration Data is different from Profibus-DP module's configuration.	Check the configuration data set on Master and the internal configuration data at the inverter.
ON-LINE	OFF	Off-Line	Master doesn't work for communication in the network.	Start the communication from Master.
			The connection of connector has a problem.	Check the connection between the pin number of connector and the termination resistor.
			There is no master in the network.	It can be possible there is no designated master or master has a problem.
			Wrong setting of station ID	Check if the station ID set in the designated Profibus communicatio

				n module is the same as the station ID set from the keypad of inverter in Configuration tool and station ID is unique in the network.
			Network Configuration Fault	Check if it exceeds the length limit of segment. Check if the connections with Segment are over 32 stations including a repeater. Check if the connections with network are over 126 stations including repeater.
	ON	On-Line	Network, Station, Parameterization and Configuration are normal	-

Table 6 Diagnostics according to LED Status

Chapter 4. Inverter Parameter

4.1 Profibus-DP Communication Parameter List

Code Number	The name of Parameter	Initial Value	Range	Definition
CM-06	FBus S/W Ver	-	-	Indicate the version of Profibus-DP communication module.
CM-07	FBus ID	1	1 ~ 125	Set up the station of Profibus-DP module.
CM-09	FBus Led	-	-	Show the ON/OFF data of the LED on Profibus-DP communication module.
CM-30	ParaStatus Num	3	0~8	Set up the Status number for use.
CM-31	Para Status-1	0x000A	0~0xFFFF	Set up Status address which will be read by Master.
CM-32	Para Status-2	0x000E	0~0xFFFF	
CM-33	Para Status-3	0x000F	0~0xFFFF	
CM-34	Para Status-4	0x0000	0~0xFFFF	
CM-35	Para Status-5	0x0000	0~0xFFFF	
CM-36	Para Status-6	0x0000	0~0xFFFF	
CM-37	Para Status-7	0x0000	0~0xFFFF	
CM-38	Para Status-8	0x0000	0~0xFFFF	
CM-50	Para Ctrl Num	2	0~8	Set up Control number for use.
CM-51	Para Control-1	0x0005	0~0xFFFF	Set up control address controlled by Profibus DP Master.
CM-52	Para Control-2	0x0006	0~0xFFFF	
CM-53	Para Control-3	0x0000	0~0xFFFF	
CM-54	Para Control-4	0x0000	0~0xFFFF	
CM-55	Para Control-5	0x0000	0~0xFFFF	
CM-56	Para Control-6	0x0000	0~0xFFFF	
CM-57	Para Control-7	0x0000	0~0xFFFF	

Code Number	The name of Parameter	Initial Value	Range	Definition
CM-58	Para Control-8	0x0000	0~0xFFFF	
CM-94	Comm Update	0	0:NO 1:YES	Update keypad parameters relating to communication.

Table 7 Inverter Parameters

4.2 Description of Profibus-DP Communication Parameters

4.2.1 Version of Communication module

It displays the version of Profibus-DP module installed on the inverter.

4.2.2 Station ID setting

CM-07	FBus ID
CM-94	Comm Update

The parameter sets the value of Station ID at Profibus-DP module. Station ID can be set up within the range of 1~125 and it cannot be duplicated to write. It needs to check if the settled Station ID is not equal to other Station ID in network.
If the value of Station ID is changed, set ‘CM-94(Comm Update)’ to ‘1’ to apply the changed value of Station ID to Profibus-DP Communication module.

4.2.3 LED indication for communication status

Profibus-DP communication module has 3 LEDs, ONLINE, ERR, and CPU on the keypad in order from left to right. It indicates communication status by LED's On/Off.

(CM-05 Status Example)

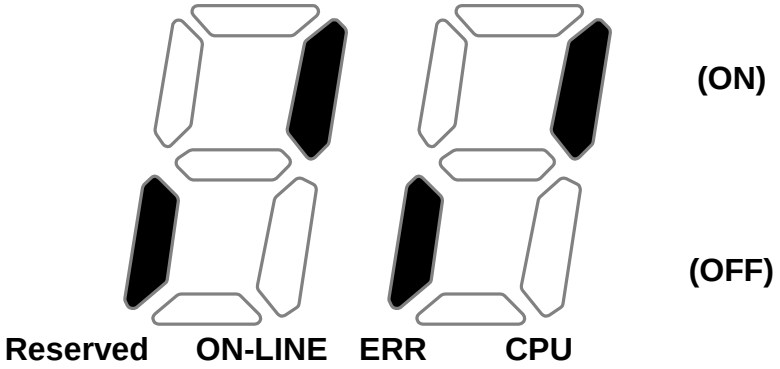

Reserved	ON-LINE (GREEN)	ERR (RED)	CPU (GREEN)
OFF	ON	OFF	ON

4.2.4 The number of Para Status setting

CM-30	The number of Para Status setting
CM-31 ~ CM-38	Para Status1~Status8 setting
CM-94	Comm Update

This parameter determines how much status information will be sent to Master by an inverter through Profibus-DP communication.
It can be set from 0 to 8. Para Status has to be set as the number of Para Status (From CM-31 to CM-38 as preset number).
For example, If CM-30 is set to ‘3’, Para Status should be set from CM-31 to CM-33. If CM-30 is set to ‘6’, Para Status should be set from CM-31 to CM-36.
If the number of Para status is changed, set ‘CM-94(Comm Update)’ to ‘1’ to apply the changed number of Para Status to Profibus-DP Communication module.

4.2.5 Para Status 1~8

CM-30	Number of Para Status setting
CM-31 ~ CM-38	Para Status1~Status8 setting

It determines that what status information will be sent to Master through Profibus-DP communication.
Para Status 1~8 are set in the form of inverter address. They set up the address for the common inverter area and the inverter keypad parameter. If the keypad parameter address is written, it will be saved in the form of 0x1000 + (‘Group number’ x 0x100) + (‘Code number’).

For example, if DI Status of No. 90 at n Group are set to Para Status-1, it should be set to 0x155A.
0x1000 + 0x05 x 0x100 + 0x5A(Dec 90) = 0x155A

Group	Group Number
dr Group	1
bA Group	2
Ad Group	3
Cn Group	4
In Group	5
OU Group	6
CM Group	7
AP Group	8
(Reserved)	9
(Reserved)	10
PRT Group	11
M2 Group	12

4.2.6 Number of Para Control setting

CM-50	Number of Para Control setting
CM-51 ~ CM-58	Para Control 1 ~ Control 8 setting
CM-94	Comm Update

It determines that how much control information will be sent to inverter by Master through Profibus-DP communication.
It can be set up within the range of 0 to 8. Para Control has to be set as the number of Para Control. (From CM-51 to CM-58 as preset number)
For example, If CM-50 is set to ‘2’, Para Control should be set from CM-51 to CM-52. If CM-50 is set to ‘5’, Para Control should be set from CM-51 to CM-55.
If the number of Para status is changed, set ‘CM-99(Comm Update)’ to ‘1’ to apply the changed number of Para Control to Profibus-DP communication module.

4.2.7 Para Control 1~8

CM-50	Number of Para Control setting
CM-51 ~ CM-58	Para Control 1~Control 8 setting

It determines that what control information will be sent to inverter through Profibus-DP communication.
Para Control 1 ~ 8 are set in the form of inverter address.
They set up the address for the common inverter area and the inverter keypad parameter. If the keypad parameter address is written, it will be saved in the form of 0x1000 + (‘Group number’ x 0x100) + (‘Code number’).

For example, if Acc Time of No.3 at dr Group is set to Para Control-1, it has to be set to 0x1103.
0x01 x 0x1000 + 0x01 x 0x100 + 0x03 (Dec 3) = 0x1103

Group	Group Number
dr Group	1
bA Group	2
Ad Group	3
Cn Group	4
In Group	5
OU Group	6
CM Group	7
AP Group	8
Reserved	9
Reserved	10
PRT Group	11
M2 Group	12

4.2.8 Comm Update

CM-07	Station ID setting
CM-30	The number of Para Status setting
CM-50	The number of Para Control setting
CM-94	Comm Update

After changing Station ID, the number of Para Status and the number of Para Control, set the Comm Update to ‘1’.
The changed values will be applied to Profibus-DP communication module after setting Comm Update to ‘1’.

Chapter 5. GSD File (Electronic Data Sheets)

GSD file contains the information of Profibus-DP communication module. The profibus configuration software needs GSD file.
You can download GSD file from technical support on LSIS website. (http://www.lsis.com)

Warranty

Maker	LS Industrial Systems Co., Ltd.		Installation (Start-up) Date	
Model No.	CPDP-S100		Warranty Period	
Customer Information	Name			
	Address			
	Tel.			
Sales Office (Distributor)	Name			
	Address			
	Tel.			

Warranty period is 12 months after installation or 18 months after manufactured when the installation date is unidentified. However, the guarantee term may vary on the sales term.

IN-WARRANTY service information

If the defective part has been identified under normal and proper use within the guarantee term, contact your local authorized LS distributor or LS Service center.

OUT-OF WARRANTY service information

The guarantee will not apply in the following cases, even if the guarantee term has not expired.

- Damage was caused by misuse, negligence or accident.
- Damage was caused by abnormal voltage and peripheral devices malfunction (failure).
- Damage was caused by an earthquake, fire, flooding, lightning, or other natural calamities.
- When LS nameplate is not attached.
- When the warranty period has expired.

Revision History

No	Date	Edition	Changes
1	2012.05	First Release	
2	2015.07	2nd Edition	Image changed