This operation manual is intended for users who have a basic knowledge of electricity and electric devices.
* S100 is the series name for the LSLV-S100 inverters.
* The web product does not support the User Sequence and some features.
  Visit us at **http://www.lsis.com** for detailed the user manual.
* The advanced function group (APP group) in this manual is only applicable for the web product.
  For details, refer to 4 **Advanced feature group (PAR → APP) on page 53**.

Table of contents

1 Product identification 1

2 Winder/Unwinder operation 3

2.1 Introductions 3

2.2 Entire structure 5

2.3 Main speed command 6

2.3.1 Main speed reference 6

2.3.2 Quick stop 8

2.4 Tension reference section 9

2.4.1 Tension reference 10

2.4.2 Taper feature 11

2.4.3 Tension boost/down features 12

2.4.4 Tension reference ramp 13

2.5 Web PID controller part 14

2.5.1 PID controller 15

2.5.2 Inertia compensation feature 18

2.5.3 P/I gain switching feature (multifunction input and gain change during the operation) 20

2.6 Diameter calculation section 21

2.6.1 Bobbin selection and diameter initialization feature 22

2.6.2 Diameter calculation feature 24

2.6.3 Diameter calculation stop mode 25

2.6.4 Web feature without diameter calculation 26

2.7 Final speed calculation section 27

2.7.1 PID output method (fixed/unfixed PID controller) 27

2.7.2 Final speed [Hz] calculation 29

2.7.3 Web feature without diameter calculation 29

2.7.4 Reverse slow speed feature 30

2.7.5 Splice feature 31

2.7.6 Calculation function for the frequency to the main speed 100% 33

2.8 Analog output part 34

2.9 Web break detection section 35

2.10 Web feature without diameter calculation part 37

2.10.1 Compensation gain calculation 37
2.10.2 Stop gain calculation during acceleration/deceleration feature 39
3 Capstan operation 41
3.1 Introductions 41
3.2 Entire structure....43
3.3 Main speed reference section....44
3.4 Tension reference section....44
3.5 Web PID controller section 44
3.6 Analog output section....44
3.7 Web break detection section 44
3.8 Material thickness calculation section....45
3.8.1 Material thickness initialization feature 47
3.8.2 Material thickness calculation feature 48
3.8.3 Material thickness calculation stop feature 49
3.9 Final speed calculation section 50
3.9.1 PID output method (fixed/unfixed PID controller)....51
3.9.2 Reverse slow speed feature 51
3.9.3 Splice feature 51
4 Advanced feature group (PAR → APP)....53

1 Product identification

The S100 Inverter comes from a product range suitable for various drive capacities and power supplies. Each model in the product range has its specifications detailed on the rating plate. Check the rating plate before installing the product to ensure that the product meets your requirements.

Note

Check the product name, open the packaging, and confirm that the product is free from defects. Contact your supplier if you have any questions about your product.

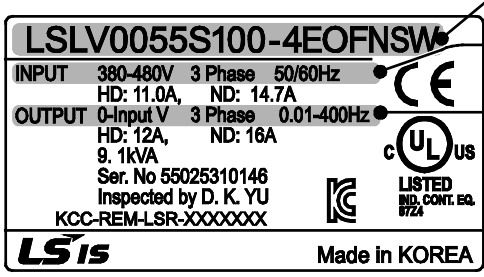

LSLV 0055 S100 - 4EOFNSW

Motor capacity

0004 - 0.4 kW	0150 - 15 kW
0008 - 0.75 kW	0185 - 18.5 kW
0015 - 1.5 kW	0220 - 22 kW
0022 - 2.2 kW	0300 - 30 kW
0037 - 3.7 kW	0370 - 37 kW
0040 - 4.0 kW	0450 - 45 kW
0055 - 5.5 kW	0550 - 55 kW
0075 - 7.5 kW	0750 - 75 kW
0110 -11 kW	

Series name

Input voltage

2 - 3-phase 200 V
4 - 3-phase 400 V

Keypad

E - LED keypad
C - LCD keypad

UL Type

O - UL Open Type

EMC filter

F - Built-in EMC
N - Non-EMC

Reactor

N - Non-Reactor
D- Built-in DCL

I/O

M - 3.5 mm
S - 5 mm

Exclusive product

W - Web version

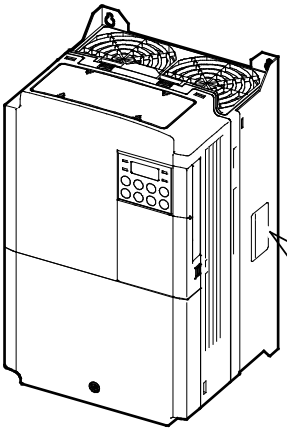

2 Winder/Unwinder operation

2.1 Introductions

A winder, also known as a "spooler," is a device used to wind web material, such as metal wire or steel plates, into a roll while maintaining the defined tension. An unwinder does the opposite–it unwinds the material while maintaining the required tension.

The S100 inverter's winder and unwinder operations consist of PID operations based on the analog feedback it receives from the tension-sensors and control components, such as dancers or load cells. The resulting closed loop tension control system winds or unwinds the material at a constant tension.

The S100 inverter's closed loop tension control system for web (winding) applications (Web-PID controller) is slightly different from a generic PID controller.

$$\text{Motor speed } [rpm] = \frac{\text{Line speed}\,[mpm]}{\text{Diameter} \times \pi\,[m]} \quad - \text{ Formula (1.1.1)}$$

As the winder operation progresses, the actual diameter [m] of spool increases. As you can see in the formula 1.1.1, the motor speed [rpm] must be lowered as the diameter increases to maintain a constant line speed [mpm]. The Web PID controller lowers the motor speed (the inverter's output frequency). Also, it internally calculates and estimates the increasing diameter, and lowers the inverter's output frequency according to the calculated diameter.

Unlike the winder operation, the actual diameter [m] of the spool decreases as the unwinder operation progresses. As you can see in formula 1.1.1, motor speed [rpm] must be raised as the diameter decreases to maintain a constant line speed [mpm]. The Web PID controller raises the motor speed (the inverter's output frequency). Also, it internally calculates and estimates the decreasing diameter, and raises the inverter's output frequency according to the calculated diameter.

This method is capable of producing a more stable performance than the method that controls the winder tension using only a generic PID controller. This is because the internally calculated diameter guarantees the inverter's output frequency. This makes the Web PID controller cover a very small proportion of the inverter's output frequency. Therefore, the risk that the output of Web PID controller will become saturated disappears and the forced oscillation of I controller output decreases sharply.

Other main features include:

Removing dancer or load cell transients during the operation (related code: APP50)

Inertia compensation (related code: APP56–57)

Quick stop while maintaining the tension (related code: APP89)

Senses imminent rupture of the web material (related code: APP77–81)

To use winder (spooler) and unwinder feature of the S100, configure as shown below:

Group	Code	Keypad display	Name	Setting value	
APP	01	App Mode	Application selection	5: Web Control	
APP	02	Web Mode Sel	Tension control operation mode selection	0	Winder
				1	Unwinder

2.2 Entire structure

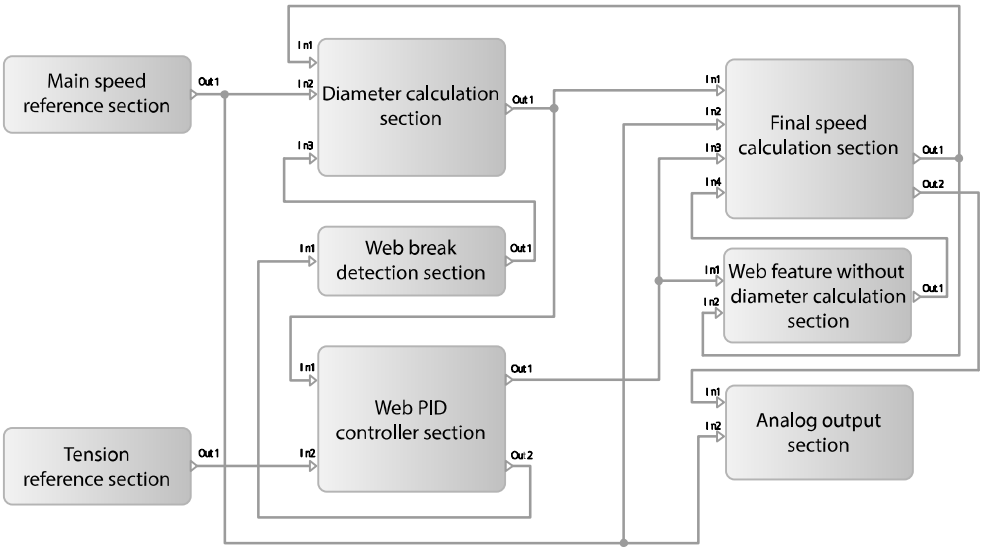

The input and output of each section are as the following:

Section	Input		Output	
Main speed reference section	-		Out1	Main speed [%]
Tension reference section	-		Out1	Tension reference [%]
Web PID controller section	In1	Diameter [%]	Out1	PID Out [%]
	In2	Tension reference [%]	Out2	PID Feedback [%]
Diameter calculation section	In1	Current output frequency [Hz]	Out1	Diameter [%]
	In2	Main speed [%]		
	In3	Web Break occurrence (0/1)		
Final speed calculation section	In1	Diameter [%]	Out1	Final speed reference [Hz]
	In2	Main speed [%]		
	In3	PID output [%]	Out2	Main speed + PID [%]
	In4	Compensation Gain [%]		
Analog output section	In1	Main speed + PID [%]	-	
	In2	Main speed [%]		
Web break detection section	In1	PID Feedback [%]	Out1	Web Break occurrence (0/1)
Web feature without diameter calculation section	In1	PID output [%]	Out1	Compensation Gain [%]
	In2	Current output frequency [Hz]		

2.3 Main speed command

The unit of the main speed is a percentage of the maximum line speed. For example, to operate system at a speed of 400 [mpm] when the system's maximum line speed is 800 [mpm], set the main speed reference to 50 [%] (=400/800x100 [%]).

You can set main speed reference using the keypad, analog input, and communication.

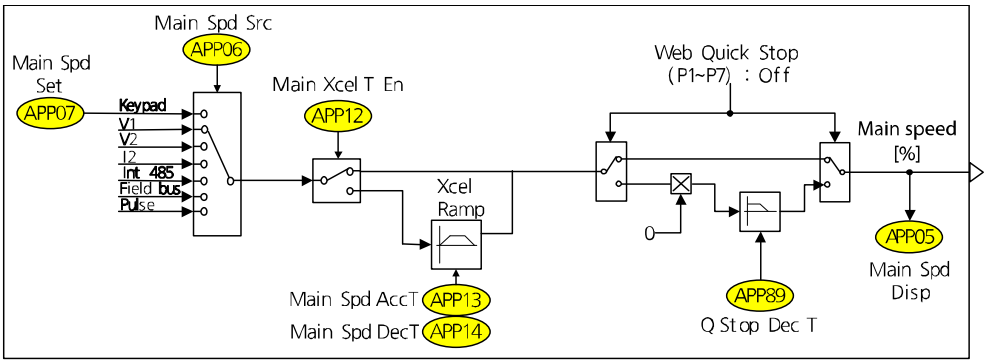

2.3.1 Main speed reference

Group	Code	Keypad display	Name	Default setting	Range	
APP	05	Main Spd Disp	Main speed reference display	Read Only [%]		
APP	06	Main Spd Src	Main speed command method	V1	0	Keypad
					1	V1
					3	V2
					4	I2
					5	Int.485
					7	Fieldbus
					11	Pulse
APP	07*	Main Spd Set	Main speed keypad settings	0.00 [%]	0.00–100.00 [%]	
APP	12	Main XcelT En	Main speed acceleration/deceleration selection	No	0	No
					1	Yes
APP	13**	Main Spd AccT	Main speed acceleration time	10.0 [sec]	0.0–300.0 [sec]	
APP	14**	Main Spd DecT	Main speed deceleration time	20.0 [sec]	0.0–300.0 [sec]	

* The code is displayed when APP06 (Main Spd Src) is set to "Keypad."
* The code is displayed when APP12 (Main XcelT En) is set to "Yes."

Code and feature	Description
APP-05 Main Spd Disp	This displays the main speed [%]. Displays the target main speed [%] when the inverter is stopped, and displays the ramp main speed [%] when the inverter is in operation.
APP-06 Main Spd Src	You can select a main speed command method. When "Keypad" is selected, the inverter operates according to the main speed [%] entered at APP07 (Main Spd Set). When "V1" is selected, you can set the main speed reference using the analog input on the basic I/O board. At this time, the filter, gain, and offset of the analog input can be adjusted at IN07–11 (V1 Filter/Gain/Offset). When "V2" or "I2" is selected, the filter, gain, and offset of the analog input can be adjusted at IN37–47 (V2 Filter/Gain/Offset) or IN52–56 (I2 Filter/Gain/Offset). "Int.485" can receive the main speed reference via the RS485 communication (Modbus-RTU, LS inv 485) that is built into the basic I/O board. "Fieldbus" can receive the main speed reference via the communication option card. At this time, to the first decimal place is valid when commanding the main speed [%] using "Int.485" (the RS 485 communication built into the basic I/O board) and "Fieldbus" (communication option card). For example, to set main speed reference to 60.0 [%], from the internal 485 communication, communication option card, or PLC option card, enter "600" to the common address "0x0396."
APP-07 Main Spd Set	When APP06 (Main Spd Src) is set to "Keypad," the inverter operates at the main speed reference entered in this code.
APP-12 Main XcelT En	You can set the acceleration and deceleration time of the main speed. When "Yes" is selected, the main speed ramp increases/decreases in the acceleration/deceleration time entered at APP13 (Main Spd AccT) and APP14 (Main Spd DecT). When "Yes" is selected, DRV03 (Acc Time) and DRV04 (Dec Time) change to 0.5 [sec]. The default setting of this code is "No," and at this time, the main speed has to be set to ramp increase/decrease via the external host controller. Otherwise, the main speed reference can be come into step and the system may become unstable.
APP-13 Main Spd AccT, APP-14 Main Spd DecT	These codes are displayed when APP12 (Main XcelT En) is set to "Yes." You can set the acceleration and deceleration time of the main speed. The standard acceleration/deceleration time is 100 [%] of the main speed. For example, when APP13 (Main Spd AccT) is set to 10 [sec], which is the default setting, the time required to accelerate the main speed from 0 [%] to 50 [%] is 5 [sec] (=10 [sec]x50 [%]/100 [%]).

2.3.2 Quick stop

When an emergency occurs in the closed loop tension control system that uses dancer or load cell, you can quickly stop the system while maintaining the tension.

This feature stops the inverter in a time that is set in APP89 (Q Stop Dec T) when the multifunction input set at "Web Quick Stop" becomes On. The deceleration time is always constant, regardless of the inverter's current output frequency.

For example, if inverters 1, 2, and 3 are linked in the system and are operating and the current output frequencies are 25 Hz, 50 Hz, and 60 Hz respectively, all inverters decelerate in 3 [sec], which is the default setting for APP89 (Q Stop Dec T), when the multifunction input "Web Quick Stop" becomes On.

At this time, the inverter output is not blocked and the tension is maintained because the output of the PID controller is valid.

Group	Code	Keypad display	Name	Default setting	Range
In	65–71	Px Define	Multifunction input settings	Web Quick Stop	-
APP	89	Q Stop Dec T	Quick stop deceleration time	3.0 [sec]	0.1–300.0 [sec]

Code and feature	Description
APP-89 Quick Stop DecT	Sets the deceleration time for Quick stop while maintaining tension during the operation for the closed loop tension control system that uses a dancer or load cell.

Caution

Even when the "Web Quick Stop" terminal input becomes On and Quick stop has been performed, the output of the inverter is not blocked. You must turn the inverter's operation command to Off and block the output of the inverter after Quick stop.

2.4 Tension reference section

The unit of tension reference is a percentage of the maximum load. For example, to maintain 10 [kgf] power when the maximum power (load) measurement of system is 20 [kgf], set the tension reference to 50 [%] (=10/20x100 [%]).

You can set the tension reference using the keypad, analog input, and communication.

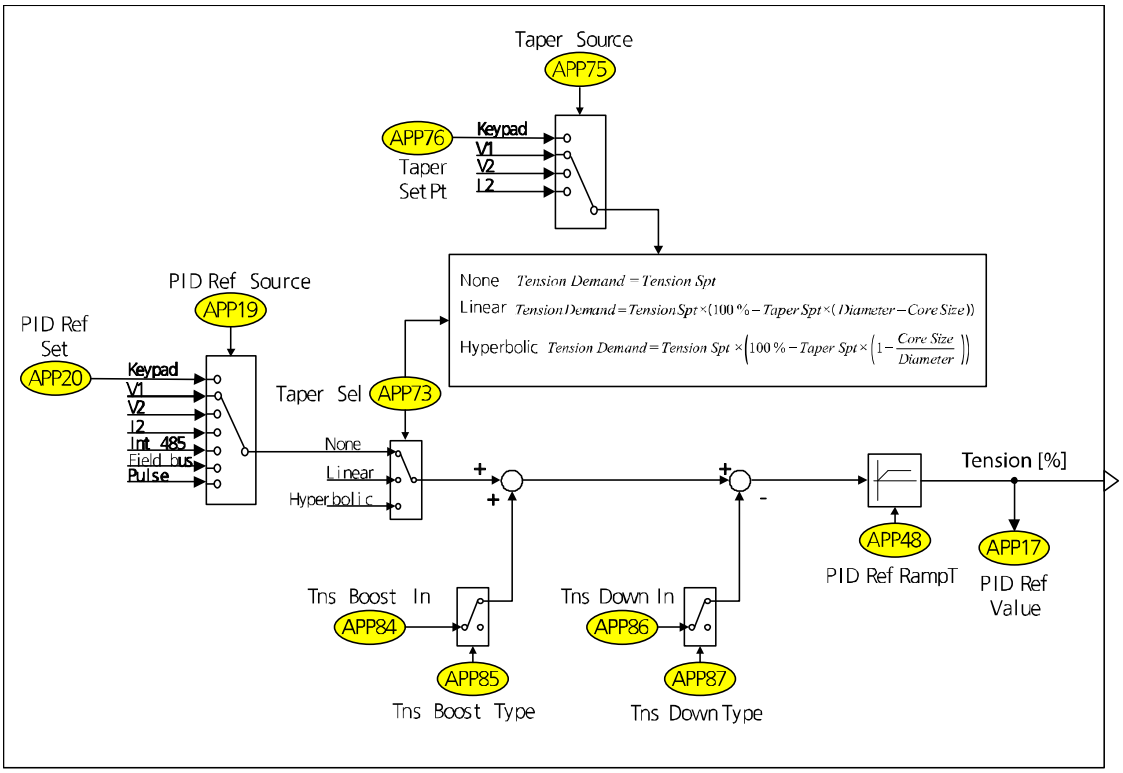

2.4.1 Tension reference

Group	Code	Keypad display	Name	Default setting	Range	
APP	17	PID Ref Value	PID reference monitor	Read Only [%]		
APP	19	PID Ref Source	PID reference source selection	0: Keypad	0	Keypad
					1	V1
					3	V2
					4	I2
					5	Int.485
					7	Fieldbus
					11	Pulse
APP	20*	PID Ref Set	PID reference source settings (Keypad)	50.00 [%]	-100–100.00 [%]	

* The code is displayed when APP19 (PID Ref Source) is set to "Keypad."

Code and feature	Description
APP-17 PID Ref Value	Displays the current PID reference [%].
APP-19 PID Ref Source	You can choose between the input method for the PID controller reference from keypad, analog, internal communication, or external communication option.
APP-20 PID Ref Set	You can set the reference of the PID controller via the keypad. The code is displayed when APP19 (PID Ref Source) is set to "Keypad."

2.4.2 Taper feature

Group	Code	Keypad display	Name	Default setting	Range	
In	65–71	Px Define	Multifunction input settings	Web Taper Dis	-	
APP	73	Taper Sel	Taper feature selection	0: None	0	None
					1	Linear
					2	Hyperbolic
APP	74	Taper Spt Val	Taper setting value monitor	Read Only [%]		
APP	75	Taper Source	Taper value setting method	0: Keypad	0	Keypad
					1	V1
					3	V2
					4	I2
APP	76	Taper SetPt	Taper keypad setting value	0.00 [%]	-100.00–100.00 [%]	

The stress towards the center increases as the Diameter expands from the Center Wind Application. When the desired tension is in the tangent direction, tension from stress is also generated. So the sum of the two vectors represents the total tension. To maintain the desired amount of tension, use the Taper feature. The feature decreases the PID reference according to the calculated diameter and offsets the size of vector that is generated by stress. Refer to the following for the conceptual diagram and formulas.

You can apply the Taper feature to the load that the load cell (weight sensor) is applied to and then to the load that the dancer (position sensor) is applied to.

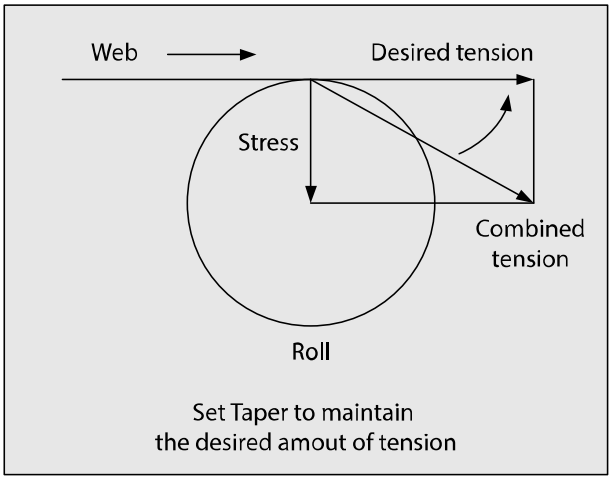

Hyperbolic Taper:

$$Tension\ Demand = Tension\ Spt \times \left(100\ \% - Taper\ Spt \times \left(1 - \frac{Core\ Size}{Diameter}\right)\right)$$

Linear Taper:

$$Tension\ Demand = Tension\ Spt \times \left(100\ \% - Taper\ Spt \times \left(Diameter - Core\ Size\right)\right)$$

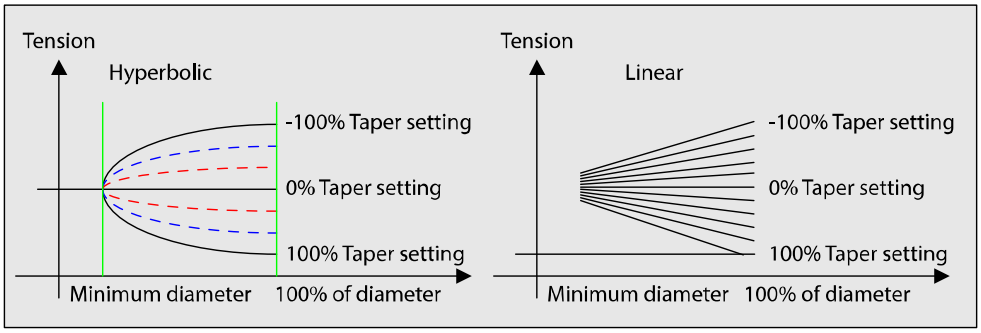

[Taper concepts and tension trends according to the settings]

2.4.3 Tension boost/down features

You can boost/down the tension (PID Reference) by as much as the setting value.

Group	Code	Keypad display	Name	Default setting	Range	
In	65–71	Px Define	Multifunction input settings	Web Boost En	-	
In	65–71	Px Define	Multifunction input settings	Web Down En	-	
APP	84	Tns Boost In	Tension boost settings	0.00 [%]	0.00–50.00 [%]	
APP	85	Tns Boost Type	Tension boost types	0: Fixed	0	Fixed
					1	Proportional
APP	86	Tns Down In	Tension down settings	0.00 [%]	0.00–50.00 [%]	
APP	87	Tns Down Type	Tension down types	0: Fixed	0	Fixed
					1	Proportional

2.4.4 Tension reference ramp

Using the ramp, you can increase the final tension reference that the Taper feature is applied to or that the boost/down is applied to for a specified time.

The final tension reference that the tension reference ramp is applied to can be exported to the analog output. In this case, set the AO1 Gain value to 300.0%, because the maximum value of the final tension reference is 300.00%.

Group	Code	Keypad display	Name	Default setting	Range
APP	48	PID Ref RampT	Tension reference ramp time	0.0 [sec]	0.0–300.0 [sec]
OUT	01	AO1	Analog output 1	Tension Ref	-

Code and feature	Description
APP-48 PID Ref RampT	You can ramp increase the final tension reference for a specified time. This is used to prevent the PID output saturation that occurs by difference between the initial start-up reference value and the feedback value.

2.5 Web PID controller part

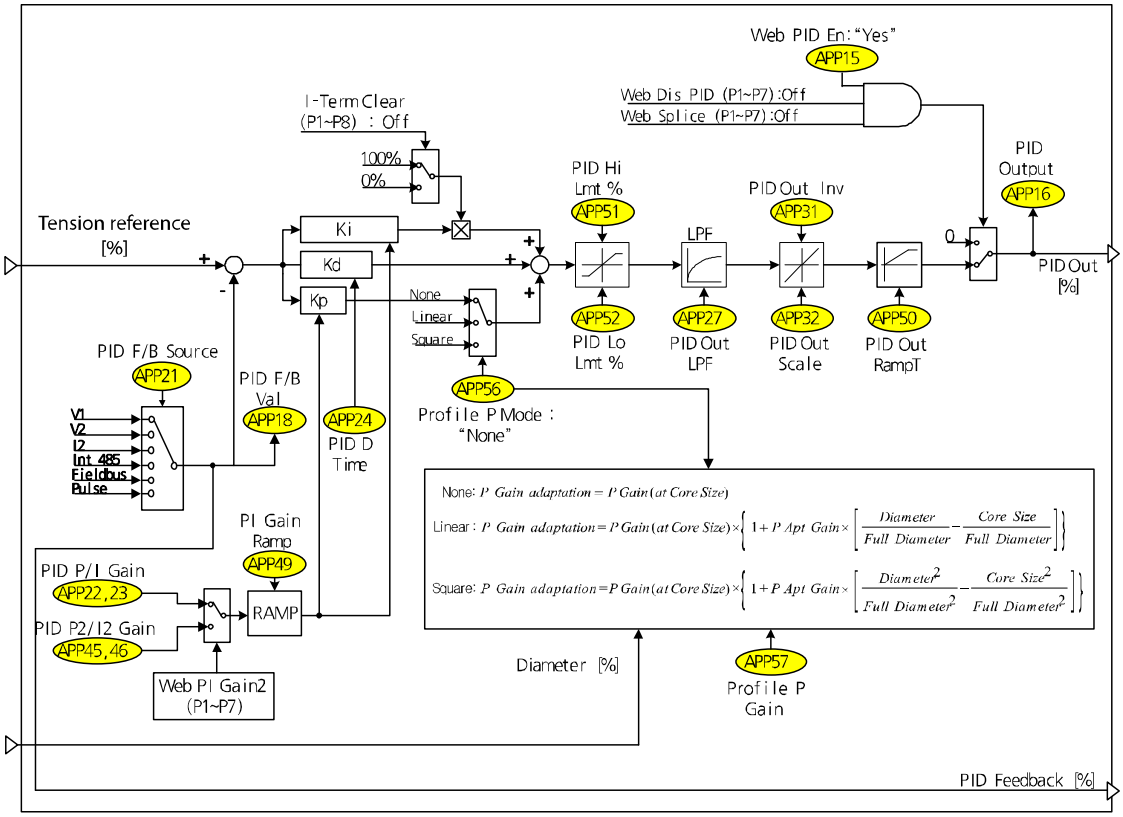

In a closed loop control system, the output of the PID controller is determined using the analog feedback value received by a tension detection device, such as a dancer or load cell. This PID controller is defined as a Web PID controller because this PID controller is optimized to the tension control systems.

The added features include:

The feature that improves initial transients of a dancer or load cell by increasing the PID output via the ramp during the inverter's initial start-up (APP50: PID Out RampT)
The inertia compensation feature that changes the PID controller's P gain via the diameter [%] estimated by the diameter calculation section (APP56: Profile P Mode, APP57: Prifile P Gain)

2.5.1 PID controller

Group	Code	Keypad display	Name	Default setting	Range	
In	65–71	Px Define	Multifunction input settings	Web Dis PID	-	
APP	15	Web PID En	Tension PID control selection	1: Yes	0	No
					1	Yes
APP	16	PID Output	PID output monitor	Read Only [%]		
APP	18	PID Fdb Value	PID feedback monitor	Read Only [%]		
APP	21	PID Fdb Source	PID feedback source selection	1: V1	0	V1
					2	V2
					3	I2
					4	Int.485
					6	Fieldbus
					10	Pulse
APP	22	PID P-Gain	PID controller proportional gain	50.0 [%]	0.0–1000.0 [%]	
APP	23	PID I-Time	PID controller integral time	10.0 [s]	0.0–200.00 [s]	
APP	24	PID D-Time	PID controller derivative time	0 [ms]	0–1000 [ms]	
APP	27	PID Out LPF	PID output filter	0 [ms]	0–10000 [ms]	
APP	31	PID Out Inv	PID output reverse	0: No	0	No
					1	Yes
APP	32	PID Out Scale	PID output scale	30.0 [%]	0.0–1000.0 [%]	
APP	50	PID Out RampT	PID output when booting Ramp time	5.0 [s]	0.0–300.00 [s]	
APP	51	PID Hi Lmt	Maximum PID output [%]	100.0 [%]	APP53–100.0 [%]	
APP	52	PID Lo Lmt	Minimum PID output [%]	-100.0 [%]	-100–APP52 [%]	
APP	53	PID I Limit	PID I controller limit	100.0 [%]	0.0–100.00 [%]	
APP	98	PID Sample T	PID controller execution cycle	1 [ms]	1–10 [ms]	

<table>
<tr><th>Code and feature</th><th>Description</th></tr>
<tr><td>APP-15
Web PID En</td><td>This determines whether or not to use the Web PID controller. Used as follows in combination with the multifunction input "Web Dis PID."
<table><tr><th>APP15 (Web PID En) settings</th><th>Multifunction input "Web Dis PID" status</th><th>Web PID controller use</th></tr><tr><td>Yes</td><td>Off</td><td>O</td></tr><tr><td>Yes</td><td>On</td><td>X</td></tr><tr><td>No</td><td>Off</td><td>X</td></tr><tr><td>No</td><td>On</td><td>X</td></tr></table></td></tr>
<tr><td>APP-16
PID Output</td><td>This displays the current PID output [%].</td></tr>
<tr><td>APP-18
PID Fdb Value</td><td>This displays the current PID feedback [%].</td></tr>
<tr><td>APP-21
PID Fdb Source</td><td>You can select between the input method of the PID controller feedback from analog, internal communication, and external communication option.</td></tr>
<tr><td>APP-22
PID P-Gain</td><td>This is the P1 gain of the PID controller. When the P gain value is 100 [%] and the error value is 100 [%], the P gain output of the P controller is 100 [%].</td></tr>
<tr><td>APP-23
PID I-Time</td><td>This is the I1 gain of the PID controller. When the I gain value is 10 [sec] and the error value is 100 [%], the required time for the output of the I controller to become saturated to 100 [%] is 10 [sec].</td></tr>
<tr><td>APP-24
PID D-Time</td><td>This is the D gain of the PID controller. When the D gain value is 10 [ms] and the change of error value is 100 [%], the output of the D controller is 100 [%] and the time it takes the output to decrease to approximately 34 [%] is 10 [ms].</td></tr>
<tr><td>APP-27
PID Out LPF</td><td>This sets the delayed time constant of the PID controller output. Generally, set this to 0 [ms] for a quick response from the PID controller. However, increasing this setting value increases the PID controller's stability but decreases the PID controller's response time.</td></tr>
<tr><td>APP-31
PID Out Inv</td><td>This determines whether or not to reverse the output of the PID controller. When "Yes" is selected, the PID output mark is output in reverse. This is useful when the direction of a tension detector, such as a dancer or load cell, is reversed.</td></tr>
<tr><td>APP-32
PID Out Scale</td><td>This adjusts the output scale of the PID controller. You must first assume that the PID controller is saturated. At this time, setting this code to 100 [%] makes the output of the PID controller 100 [%] and setting this code to 30 [%] makes the output of the PID controller 30 [%].</td></tr>
<tr><td>APP-50
PID Out RampT</td><td>You can ramp increase the PID output during the inverter's initial start-up for a specified time. This feature gradually increases the PID controller's output during the initial start-up, and improves the transient</td></tr>
</table>

Code and feature	Description
	characteristics during the initial start-up of a dancer or load cell, such as slope. The following figure (b) shows the output of the P controller when the P gain is 100 [%] and the PID error value is 100 [%] at start-up. The dotted line in the figure (b) shows the output of the P controller when APP50 (PID Out RampT) is set to "0 [sec]". The solid line in the figure (b) shows that the output of the P controller ramp increases in the time specified at APP50 (PID Out RampT) during the initial start-up. In other words, the solid line in the figure (b) is more advantageous than the dotted line when it comes to the transient during the inverter's initial start-up. 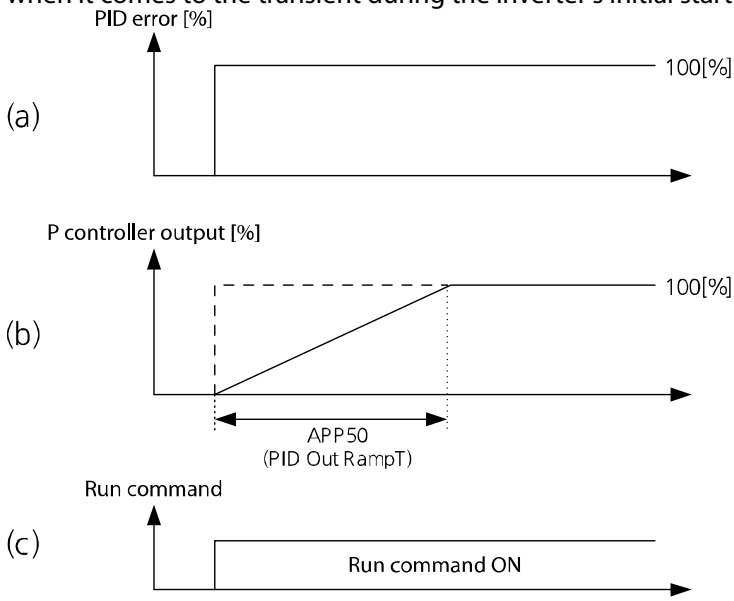 [Operation by APP50 (PID Out RampT] Also, APP50 (PID Out Ramp T) is based on when the output of the PID controller is 100 [%]. For example, when APP50 (PID Out RampT) is set to 5 [sec], the time required for the output of PID controller to become saturated to 100 [%] during the initial start-up is 5 [sec], and the time required for the output of the PID controller to become saturated to 50 [%] during the initial start-up is 2.5 [sec].
APP-51, 52 PID Hi/Lo Lmt	This sets the maximum/minimum output of the PID controller. Also, the cumulative value of the I controller is limited to the maximum/minimum value specified in this code.
APP-53 PID I Limit	This is the output limit value of the I controller for the anti-windup.
APP-98 PID Sample T	This changes the execution cycle of the Web PID controller.

2.5.2 Inertia compensation feature

Group	Code	Keypad display	Name	Default setting	Range	
APP	56	Profile P Mode	P Gain profile selection	0: None	0	None
					1	Linear
					2	Square
APP	57*	Profile P Gain	Profile gain	1.00 [%]	0.01–10.00 [%]	

* The code is displayed when APP56 (Profile P Mode) is set to "Linear" or "Square."

As the actual diameter of the spool increases as the winder operation progresses, the inertia also increases. The inertia must be compensated to the same degree as the increasing (+) value. In contrast, as the actual diameter of the spool decreases as the unwinder operation progresses and the inertia also decreases. The inertia must be compensated to the same degree as the decreasing (-) value.
For inertia compensation, increase the P gain as the diameter increases. The formula is as follows. The following figure shows the P gain trend according to the diameter change.

"None":

$$Inertia\ compensation\ \ P\ \ Gain\ = P\ Gain$$

"Linear":

$$Inertia\ compensation\ P\ Gain\ = P\ Gain \times \left\{ 1 + \Pr ofile\ P\ \ Gain(APP57) \times \left[\frac{Diameter}{Full\ \ Diameter} - \frac{Bobbin\ Diameter}{Full\ \ Diameter} \right] \right\}$$

"Square":

$$Inertiacompensation\ P\ \ Gain\ = P\ Gain \times \left\{ 1 + \Pr ofile\ P\ Gain\ \times \left[\frac{Diameter^2}{Full\ \ Diameter^2} - \frac{Bobbin\ Diameter^2}{Full\ \ Diameter^2} \right] \right\}$$

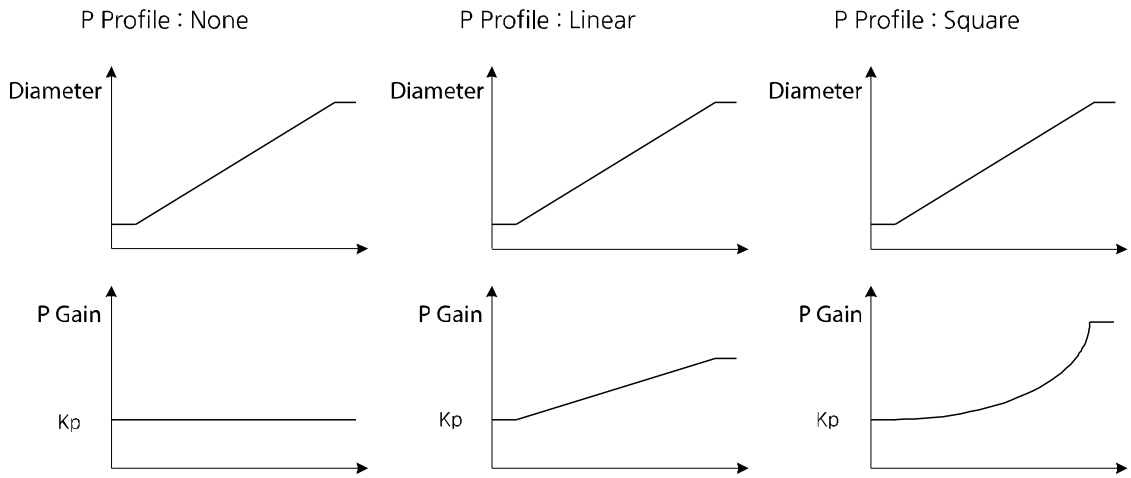

[The P gain trend according to the APP56 (Profile P Mode) setting]

2.5.3 P/I gain switching feature (multifunction input and gain change during the operation)

The system response may be unstable if the input set at "Web PI Gain2" is changed during inverter operation or if the P/I gain switch occurs momentarily without a switching ramp time when a user changes the APP22 (PID P-Gain) and APP23 (PID I-Time) settings directly. To prevent these problems, APP49 (PI Gain Ramp) helps the P/I gain switch to change slowly according to the proper setting value.

Group	Code	Keypad display	Name	Default setting	Range
In	65–71	Px Define	Multifunction input settings	Web PI Gain2	-
APP	22	PID P-Gain	PID controller proportional gain	50.0 [%]	0.0–1000.0 [%]
APP	23	PID I-Time	PID controller integral time	10.0 [s]	0.0–200.00 [s]
APP	45	PID P2-Gain	PID controller proportional gain 2	100.0 [%]	0.0–1000.0 [%]
APP	46	PID I2-Time	PID controller integral time 2	20.0 [s]	0.0–200.00 [s]
APP	49	PI Gain Ramp	PI gain switching ramp time	30.0 [sec]	0.0–300.0 [sec]

<table>
<tr><th>Code and feature</th><th>Description</th></tr>
<tr><td>APP-49
PI Gain Ramp</td><td>This is the ramp time change applied when P/I gain switching occurs at the multifunction input "Web PI Gain2" during the inverter operation. This is also applied when a user changes the P/I gain directly using the keypad during the inverter operation. The ramp time is switched based on 1000 [%] of P gain and 200 [sec] of I gain. For example, when APP49 (PI Gain Ramp) is set to 30 [sec], the time required to change P gain from 100 [%] to 200 [%] is 3 [sec] (=30x100/1000).

The P/I gain selection method is based on the multifunction input at "Web PI Gain2."
<table>
<tr><th>Multifunction input "Web PI Gain2" status</th><th>Selected P/I gain</th></tr>
<tr><td>Off</td><td>APP22 (PID P-Gain), APP23 (PID I-Time)</td></tr>
<tr><td>On</td><td>APP45 (PID P2-Gain), APP46 (PID I2-Time)</td></tr>
</table></td></tr>
</table>

2.6 Diameter calculation section

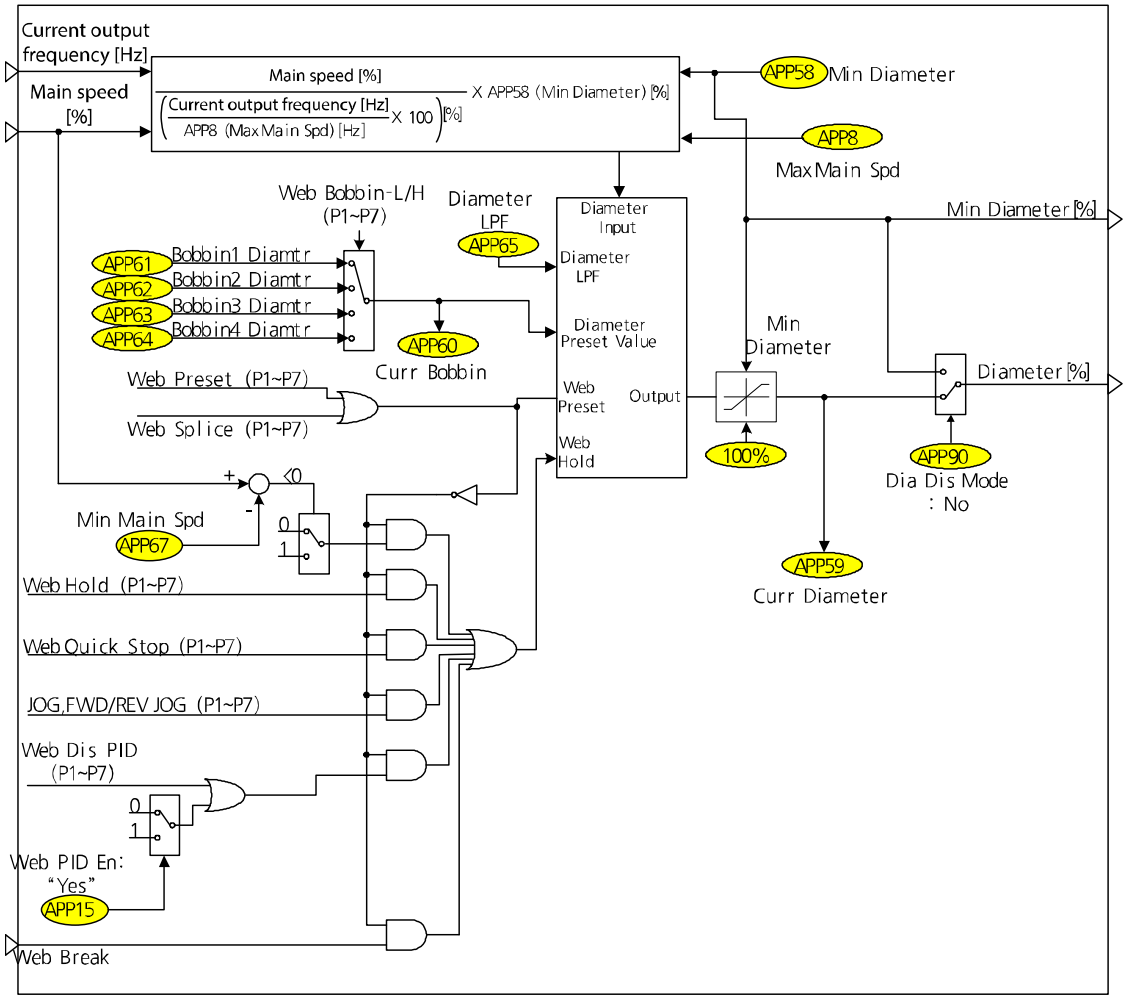

In the tension control system, the correlation of the line speed of the winder/unwinder, motor speed, and diameter is explained in formula 1.6.1.

Line speed [mpm] = Motor speed [rpm] × (Diameter × π)[m] = Consistant – Formula (1.6.1)

Consider the following example of the winder in a closed loop tension control system. The line speed [mpm] is always consistent unless a user changes the line speed and the actual diameter [m] increases as time passes. Therefore, as you can see in formula 1.6.1, the output of the Web PID controller becomes a negative (-) value because the tension applied to the dancer or load cell increases as the line speed that is supposed to be consistent increases. The line speed in formula 1.6.1 decreases because the actual motor speed [rpm] decreases and is maintained.

Using the consistent line speed of the winder [mpm] and the actual motor speed [rpm] that

decreases, the diameter calculation can be estimated as shown in formula 1.6.2. The diameter can be estimated to increase as time passes.

$$\text{Estimated diameter} \times \pi\,[m] = \frac{\text{Line speed}\,[mpm]}{\text{Motor speed}\,[rpm]} \quad - \text{Formula}\,(1.6.2)$$

The following example is for the unwinder. Along with the winder, the line speed [mpm] is always consistent unless a user changes the line speed and the actual diameter [m] decreases as time passes, unlike the winder. Therefore, as you can see in formula 1.6.1, the tension that is applied to a dancer or load cell increases as the line speed decreases like a winder. However, unlike a winder, the unwinder internally reverses the output mark of the Web PID controller. Therefore, the output of the Web PID controller becomes a positive (+) value, and the line speed in formula 1.6.1 decreases because the actual motor speed [rpm] increases, unlike a winder, and is maintained. Using the consistent line speed of the unwinder [mpm] and the actual motor speed [rpm] that increases, the diameter calculation can be estimated as shown in formula 1.6.2. The diameter can be estimated to decrease as time passes.

2.6.1 Bobbin selection and diameter initialization feature

Group	Code	Keypad display	Name	Default setting	Range
In	65–71	Px Define	Multifunction input settings	Web Preset	-
In	65–71	Px Define	Multifunction input settings	Web Bobbin-L	-
In	65–71	Px Define	Multifunction input settings	Web Bobbin-H	-
APP	60	Curr Bobbin	Current bobbin display	Read Only	
APP	61	Bobbin1 Diamtr	Bobbin 1 diameter [%]	10.0 [%]	APP58–100.0 [%]
APP	62	Bobbin2 Diamtr	Bobbin 2 diameter [%]	15.0 [%]	APP58–100.0 [%]
APP	63	Bobbin3 Diamtr	Bobbin 3 diameter [%]	20.0 [%]	APP58–100.0 [%]
APP	64	Bobbin4 Diamtr	Bobbin 4 diameter [%]	25.0 [%]	APP58–100.0 [%]

<table>
<tr><th>Code and feature</th><th>Description</th></tr>
<tr><td>APP-60
Curr Bobbin</td><td>This displays the number of currently selected bobbins (1–4).</td></tr>
<tr><td>APP-61–64
Bobbin # Diamtr</td><td>The diameter of the bobbin is selected by the combination of the multifunction inputs "Web Bobbin-L" and "Web Bobbin-H." When bobbin is selected, turn On Off the multifunction input "Web Preset" to initialize the diameter of selected bobbin.
<table>
<tr><th>Multifunction input "Web Bobbin-H"</th><th>Multifunction input "Web Bobbin-L"</th><th>Selected bobbin</th></tr>
<tr><td>Off</td><td>Off</td><td>Bobbin1 (APP61)</td></tr>
<tr><td>Off</td><td>On</td><td>Bobbin2 (APP62)</td></tr>
<tr><td>On</td><td>Off</td><td>Bobbin3 (APP63)</td></tr>
<tr><td>On</td><td>On</td><td>Bobbin4 (APP64)</td></tr>
</table>
For example, if there are 4 types of bobbins as in the figure below, enter the calculated values 14.2 [%], 28.5 [%], 35.7 [%], and 50.0 [%] at APP61~64 (Bobbin # Diamtr). Then, enter 14.2 [%], the diameter of Bobbin 1, which is the smallest bobbin, to APP58 (Min Diameter).
Select the currently installed bobbin in combination with the multifunction input "Web Bobbin-L" and "Web Bobbin-H," and then turn On/Off the multifunction input "Web Preset" to initialize.</td></tr>
</table>

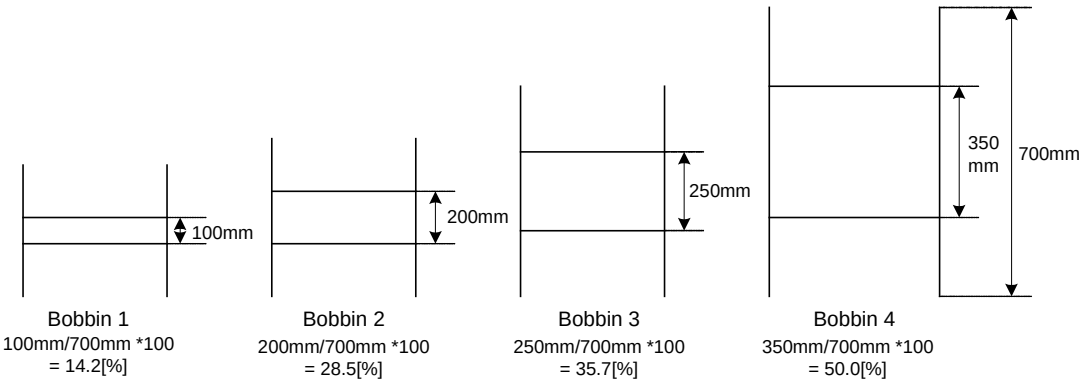

[When there are various sizes of bobbins]

Caution

You must switch the multifunction input "Web Preset" On/Off when replacing the bobbin. Then, the diameter cannot be calculated if the multifunction input "Web Preset" is On.

2.6.2 Diameter calculation feature

Group	Code	Keypad display	Name	Default setting	Range
APP	58	Min Diameter	Minimum bobbin diameter keypad value	10.0 [%]	5.0–100.00 [%]
APP	59	Curr Diameter	Current diameter display	10.0 [%]	APP58–100.0 [%]
APP	65	Diameter LPF	Diameter calculation filter	50.0 [sec]	0.0–300.0 [sec]
APP	08	Max Main Spd	Frequency to the main speed 100%	60.0 [Hz]	0.0–DRV20 [Hz]

Formula 1.6.2 can be reconfigured when converting to the [%] scale.

$$\text{Estimated diameter } [\%] = \frac{\text{Main speed } [\%]}{\dfrac{\text{Current output frequency } [\text{Hz}]}{\text{APP8 (Max Main Spd)}} \times 100 \ [\%]} \times \text{APP58 (Min Diameter)} - \text{Formula (1.6.3)}$$

The explanation of the winder operation principles is as follows.

The main speed reference [%] is always consistent unless a user changes the main speed reference. The actual diameter [m] of winder bobbin increases as time passes. At the same time, the tension applied to the dancer or load cell also increases. Therefore, the output of the Web PID controller becomes a negative (-) value, and the current output frequency [Hz] of the inverter decreases. Therefore, the estimated diameter [%] increases according to formula 1.6.3. The estimated diameter [%] is limited internally to a maximum of 100 [%] and a minimum APP58 (Min Diameter). You can adjust the calculation speed of diameter [%] by setting a time constant of the estimated diameter [%] to APP65 (Diameter LPF).

The estimated diameter [%] is a very important element in deciding the inverter's final speed reference [Hz]. For details, refer to **2.7 Final speed calculation section on page 27**.

Code and feature	Description
APP-58 Min Diameter	Enter the proportion [%] of a bobbin's unfilled diameter to the bobbin's full diameter when the material is fully winded. If the types of bobbins are various as the earlier figure, enter proportion [%] of the smallest diameter of the smallest bobbin per the biggest diameter of the biggest bobbin. In a situation such as shown in the earlier figure, enter 14.2 [%] to APP58 (Min Diameter).
APP-59 Curr Diameter	This displays the diameter [%] of the current bobbin. The diameter [%] of the selected bobbin is displayed after the multifunction input "Web Preset" On/Off and the diameter calculated by the formula 1.6.3 is updated during the operation.
APP-65 Diameter LPF	Set the delay time constant of the diameter [%] calculation. Generally, specify a value around the traverse turnaround time.
APP-08 Max Main Spd	Enter the maximum speed [Hz] of the smallest bobbin's minimum diameter when the main speed reference is 100 [%]. The following is an example. In the earlier figure, the minimum diameter of the smallest bobbin is 0.1 m (=100 mm). Suppose the maximum line speed of this system is 350 [mm] and the four pole motor and the belt rate (motor is faster) are 2.3/1. At this time, the value that is to be entered to APP08 (Max Main Spd) can be calculated as follows. $APP8\,(Max\ Main\ Spd) = \frac{350[mpm]}{0.10[m]\times\pi} \times 2.3(\text{Belt ratio}) \times \frac{4\ (\text{Number of poles})}{120} = 85.46\,[Hz]$

2.6.3 Diameter calculation stop mode

Group	Code	Keypad display	Name	Default setting	Range
In	65–71	Px Define	Multifunction input settings	Web Hod	-
APP	66	Web Hold Freq	Diameter calculation stop frequency	5.00 [Hz]	0.00–30.00 [Hz]
APP	67	Min Main Spd	Minimum main speed	0.0 [%]	0.0–100.00 [%]

The diameter calculation must be stopped when one of the following occurs — multifunction input "Web Hold" is On, jog operation is occurring, Web PID prohibition status, slow speed under APP66 (Web Hold Freq) and APP67 (Min Main Spd), and quick stop section by the multifunction input "Web Quick Stop". Diameter calculation is meaningful only during normal operation.

The diameter calculation is stopped under the following conditions:

- Multifunction input "Web Hold": On
- Main speed reference [%] < APP67 (Min Main Sped)
- Output frequency [Hz] < APP66 (Web Hold Freq)
- Quick stop by the multifunction input "Web Quick Stop": On
- Break sensing status (Web Break) is entered
- Multifunction input "Web Dis PID": On
- APP15 (Web PID En): Yes
- Jog operation

2.6.4 Web feature without diameter calculation

Group	Code	Keypad display	Name	Default setting	Range	
APP	90	Dia Dis Mode	Web feature without diameter selection	0: No	0	No
					1	Yes

Select this to perform a tension control operation without using the diameter value. When APP90 is set to "Yes," the current diameter becomes the minimum diameter (Min Diameter), regardless of the diameter calculation, and the diameter value does not affect the tension control.

For details about the Web feature without diameter calculation, refer to **2.10 Web feature without diameter calculation part on page 37**.

2.7 Final speed calculation section

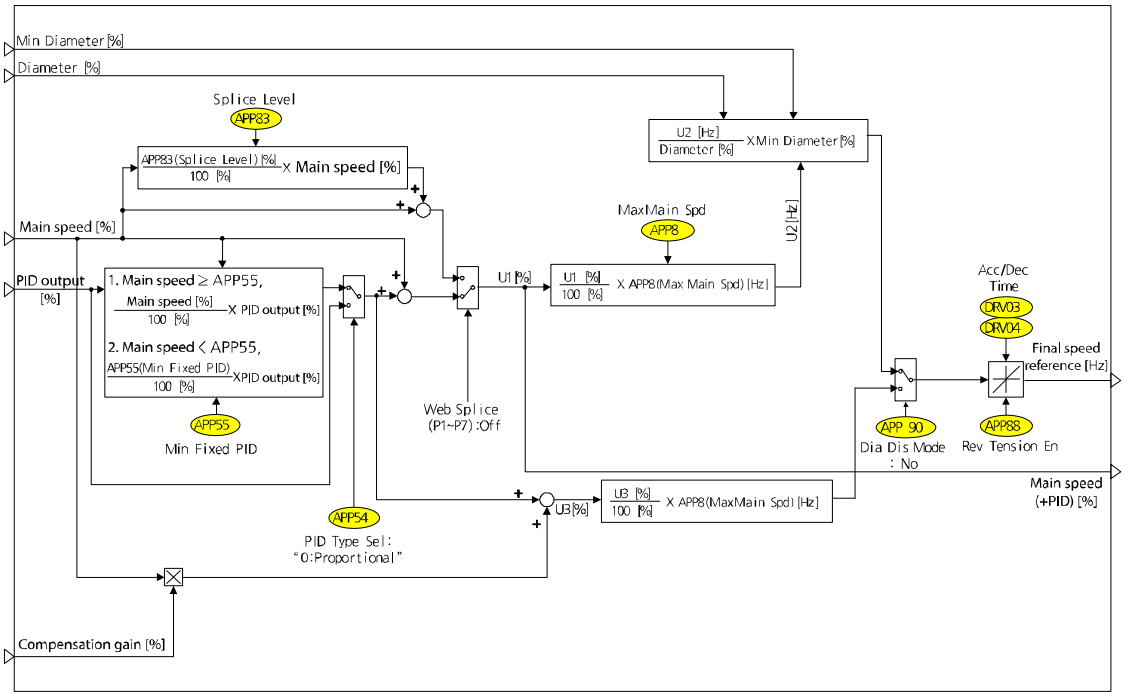

[Final speed calculation section]

The final speed calculation section determines the inverter's final speed reference [Hz] using the main speed [%] calculated in the main speed reference section, the PID output [%]calculated in the Web PID controller section, and the diameter [%]calculated in the diameter calculation section.

2.7.1 PID output method (fixed/unfixed PID controller)

Group	Code	Keypad display	Name	Default setting	Range	
APP	54	PID Type Sel	PID controller type selection	0: Proportional	0	Proportional
					1	Fixed
APP	55*	Min Fixed PID	Minimum value of the fixed PID controller	20.0 [%]	0.0–50.00 [%]	

* The code is displayed when APP54 (PID Type Sel) is set to "Proportional."

When APP54 (PID Type Sel) is set to "Fixed," the PID output [%], the output of the Web PID controller, is always consistent regardless of the main speed [%] as shown in formula 1.7.1.

$$\text{Final PID output [\%]} = \text{PID output [\%]} \quad \text{– Formula (1.7.1)}$$

When APP54 (PID Type Sel) is set to "Proportional" (the default setting), the PID output [%], the output of the Web PID controller, is proportional to the main speed [%] as shown in formula 1.7.2. That is to say, the proportion that the PID output [%] takes in the main speed is constantly maintained. The PID output [%] decreases as the main speed [%] decreases. The PID output [%] increases proportionally as the main speed [%] increases.

$$\text{Final PID output [\%]} = \text{PID output [\%]} \times \frac{\text{Main speed reference [\%]}}{\text{100.0 [\%]}} \quad \text{– Formula (1.7.2)}$$

However, if the low main speed reference under the value set at APP55 (Min Fixed PID) is commanded when APP54 (PID Type Sel) is set to "Proportional," the inverter operates as shown in formula 1.7.3. The controller's small output in the low main speed reference at APP55 (Min Fixed PID) can be prevented by operating as shown in formula 1.7.3.

$$\text{Final PID output [\%]} = \text{PID output [\%]} \times \frac{\text{APP55 (Min Fixed PID) [\%]}}{\text{100.0 [\%]}} \quad \text{– Formula (1.7.3)}$$

The following table shows how the final PID output [%] is determined by APP54 (PID Type Sel) if APP32 (PID Out Scale) is set to "20 [%]" and APP55 (Min Fixed PID) is set to "10 [%]," and if the PID output is currently saturated to 20 [%].

(Note 1), in the following table, is determined by formula 1.7.3 because the main speed is 2% or 8%, which is less than 10 [%] value set at APP55 (Min Fixed PID). (Note 2) is determined by formula 1.7.2 because the main speed is 20% or 80%, which is more than 10 [%] value set at APP55 (Min Fixed PID).

PID output comparison depends on the PID controller type (APP54: PID Type Sel)

Main speed reference [%]	PID output [%] when APP54 (PID Type Sel) is Fixed	PID output [%] when APP54 (PID Type Sel) is Proportional
2.0	20.0	2.0 (Note 1)
8.0	20.0	2.0 (Note 1)
20.0	20.0	4.0 (Note 2)
80.0	20.0	16.0 (Note 2)

2.7.2 Final speed [Hz] calculation

In the earlier diagram, U1 [%] is "main speed [%] + PID output [%]" and can be reconfigured to 1.7.4 when converting to the [Hz] scale.

$$\text{Main speed + PID output [Hz]} = \frac{\text{Main speed + PID output [\%]}}{\text{100.0 [\%]}} \times \text{APP8 (Max Main Spd) [Hz]} \quad \text{– Formula (1.7.4)}$$

Formula 1.7.5 is a modification of formula 1.6.1 in section 6.6. The final speed [Hz] is calculated and output using formula 1.7.5.

$$\text{Line speed [mpm]} = \text{Motor speed [rpm]} \times (\text{Diameter} \times \pi)[\text{m}] = \text{Consistant} \quad \text{– Formula (1.6.1)}$$

$$\text{Main speed [Hz]} = \frac{\text{Line speed [mpm]}}{(\text{Diameter} \times \pi)[\text{m}]} = \frac{\text{Main speed + PID output [Hz]}}{\text{Estimated diameter [\%]}} \times \text{APP58 (Min Diameter) [\%]} \quad \text{– Formula (1.7.5)}$$

2.7.3 Web feature without diameter calculation

Group	Code	Keypad display	Name	Default setting	Range	
APP	90	Dia Dis Mode	Web feature without diameter selection	0: No	0	No
					1	Yes

Select this to calculate the final speed reference without using the diameter value. When APP90 is set to "Yes," the speed reference is calculated using the main speed, compensation gain, and PID output value. See formula 1.7.6 for details.

$$\text{Final speed [\%]} = (\text{Main speed} \times \text{Compensation gain}) + \text{PID Output [\%]} \quad \text{– Formula (1.7.6)}$$

For details about the Web feature without diameter calculation, refer to **2.10 Web feature without diameter calculation part on page 37**.

Caution

The final speed [Hz], which is the final value of formula 1.7.5 that is periodically calculated in the final speed calculation part, accelerates/decelerates frequently. At this time, the acceleration/deceleration time is DRV03 (Acc Time) and DRV04 (Dec Time).

Also, DRV03 (Acc Time) and DRV04 (Dec Time) must be set to a short time shorter than 2.0 [sec] for quick reflection of the final speed when using the Web Control.

2.7.4 Reverse slow speed feature

Group	Code	Keypad display	Name	Default setting	Range	
APP	88	Rev Tension En	Reverse slow speed feature selection	0: No	0	No
					1	Yes

Code and feature	Description
APP-88 Rev Tension En	In the final speed calculation section's figure, consider that U1 [%], main speed reference [%] + PID output [%] is minus (-). In this situation, the inverter operates in forward direction when this function code is selected to "Yes" and the forward operation command is issued. But if this function code is set to "No," the initial setting, and the forward operation command is issued, the inverter does not operate in the reverse direction and the output frequency is limited to 0 [Hz]. When this function is set to "1: Yes," and if the PID output [%] is negative (-} while the main speed reference is 0 [%], the inverter operates in the reverse direction as much as the absolute value of the PID output [%] and the tension of material applied to the closed loop tension control system can be maintained.

2.7.5 Splice feature

Group	Code	Keypad display	Name	Default setting	Range
In	65–71	Px Define	Multifunction input settings	Web Splice	-
APP	83	Splice Level	Splice level	0.0 [%]	0.0–100.00 [%]

The splice system allows you to replace a bobbin during the operation by controlling the two motors using two separated inverters. The replacement of a bobbin must be performed without a line speed change. When the multifunction input set by inverter's "62: Web Splice" is ON, the output of the Web PID controller is blocked and the inverter's final speed reference is determined only by the results of the formulas at 1.7.6 - 1.7.8 that main speed [%] and APP83 (Splice Level) are combined.

The reason that the right hand side of the formula 1.7.6 is as follows. When material is starting to be rolled onto a new bobbin, the load changes sharply and the material may sag. To avoid this, the inverter increases speed to as much as the value set in APP83 (Splice Level) when the material is rolled to a new bobbin. For example, when APP83 (Splice Level) set to 20 [%] and the main speed reference is 50 [%], the main speed reference [%] becomes 60 [%] (= 50 [%] + 50 [%] x 20 [%] / 100 [%]) if the multifunction input that is set by "62: Web Splice" is ON.

$$\text{Main speed reference [\%]} = \text{Main speed [\%]} + \text{Main speed [\%]} \times \frac{\text{APP83(Splice Level) [\%]}}{\text{100 [\%]}} \quad \text{– Formula (1.7.6)}$$

The formula can be reconfigured to 1.7.7 when converting to the [Hz] scale.

$$\text{Main speed reference [Hz]} = \frac{\text{Final main speed reference [\%]}}{\text{100.0 [\%]}} \times \text{APP8 (Max Main Spd) [Hz]} \quad \text{– Formula (1.7.7)}$$

Formula 1.7.7 goes through the formula 1.7.8 and outputs the inverter's final speed reference. The reason that "initial diameter [%]" is in the denominator of the right-hand side, such as in formula 1.7.8, is because diameter of the bobbin is initialized to diameter set among APP 61 to 64 when the multifunction input set at "62: Web Splice" becomes ON.

$$\text{Main speed reference [Hz]} = \frac{\text{Main speed reference [Hz]}}{\text{Initial diameter [\%]}} \times \text{APP58 (Min Diameter) [\%]} \quad \text{– Formula (1.7.8)}$$

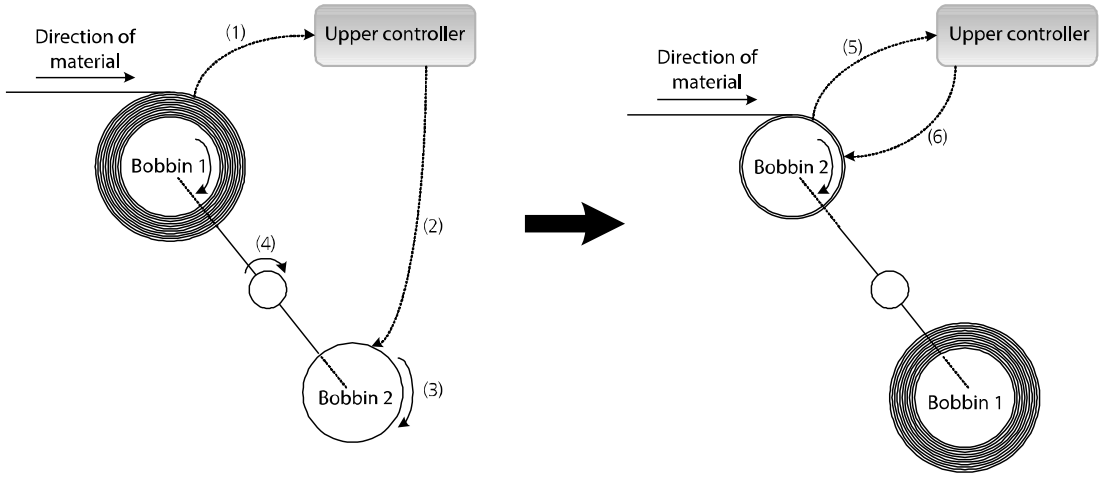

[Main concept of splice]

The general structure of the winder's splice system can be explained in the above figure. The operating sequence is as follows.

Bobbin (1), currently rolling material, sends a signal to the upper controller when the bobbin is almost full. ((1) in the figure)

The upper controller sends an ON signal to the multifunction input that is set by "62: Web Splice" of the inverter that controls Bobbin (2), which is currently empty. ((2) in the figure)

The inverter starts to operate Bobbin 2 in a reference value where only the main speed reference [%] and APP83 (Splice Level) are combined, such as in formula 1.7.6 to 1.7.8, while blocking the output of the Web PID controller. ((3) in the figure)

The spindle that switches bobbins rotates and switches the position of Bobbin 1 and Bobbin 2. ((4) in the figure)

The signal is sent to the upper controller when the bobbin is switched to Bobbin 2. ((5) in the figure)

The upper controller sends an OFF signal to the multifunction input that is set by "62: Web Splice" of the inverter that controls Bobbin 2 to stop the splice operation. The Web PID controller starts operating again and the diameter calculation is restarted. The output frequency of the inverter is determined by the formula 1.7.5. ((6) in the figure)

2.7.6 Calculation function for the frequency to the main speed 100%

Group	Code	Keypad display	Name	Default setting	Range
APP	08	Max Main Spd	Frequency to the main speed 100%	60.0 [Hz]	0.0–DRV20 [Hz]
APP	09	Max Line Spd	Maximum line speed [mpm]	565.2 [mpm]	1–5000.0 [mpm]
APP	10	Gear Ratio	Gear ratio	1.00	0.10–100.00
APP	11	Min Dia [m]	Minimum diameter [m]	0.100 [m]	0.010–5.000 [m]

For tension control, the frequency to the main speed 100%, when the diameter is at the minimum, must be set. To enter the value, the maximum line speed of the tension control system, the minimum diameter of the bobbin in use, and the gear ratio between the motor and winder are needed.

Users may calculate the frequency to the main speed 100% and set the value at APP08 (Max Main Spd), but if you do not know the formula, set APP09 to "11" to automatically calculate and set the value at APP08(Max Main Spd).

The calculation formula is as shown in formula 1.7.9. The number of poles in the motor in BAS11 (Pole Number) is used to convert the formula that converted the [rpm] scale to [Hz] scale formula.

$$\text{Maximum motor speed (APP08)[Hz]} =$$

$$\text{Gear riatio (APP10)} \times \frac{\text{Maximum line speed (APP09)[mpm]}}{\text{Minimum diameter (APP11)[m]} \times \pi} \times \frac{\text{Number of poles (BAS11)}}{120} - \text{Formula (1.7.9)}$$

2.8 Analog output part

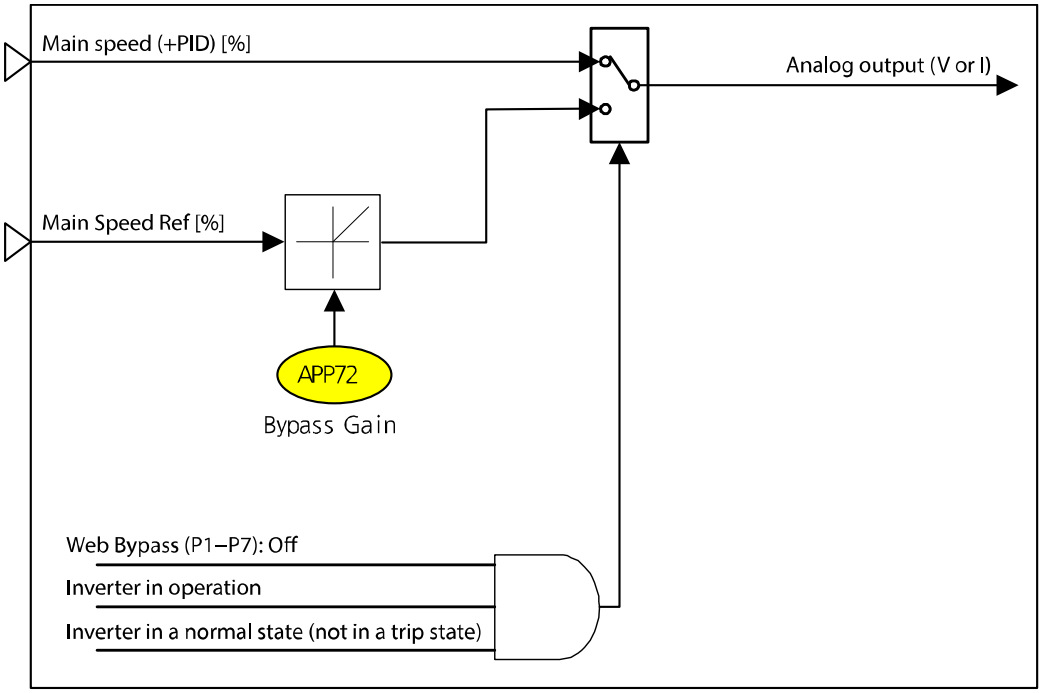

Group	Code	Keypad display	Name	Default setting	Range
In	65–71	Px Define	Multifunction input settings	Web Bypass	-
OUT	01	AO1 Mode	Analog output 1	Web Spd Out	-
APP	72	Bypass Gain	Bypass gain	100.0 [%]	0.0–300.00 [%]

The main speed + PID output [%] can be output via the analog output during normal inverter operation (multifunction input "Web Bypass" is Off, inverter is in operation, and inverter is not in a trip state but in a normal state).

When the inverter is not in a normal operation state (multifunction input is On, inverter is stopped, or inverter is in a trip state), the main speed [%] is multiplied by APP72 (Bypass Gain) and output via the analog output.

2.9 Web break detection section

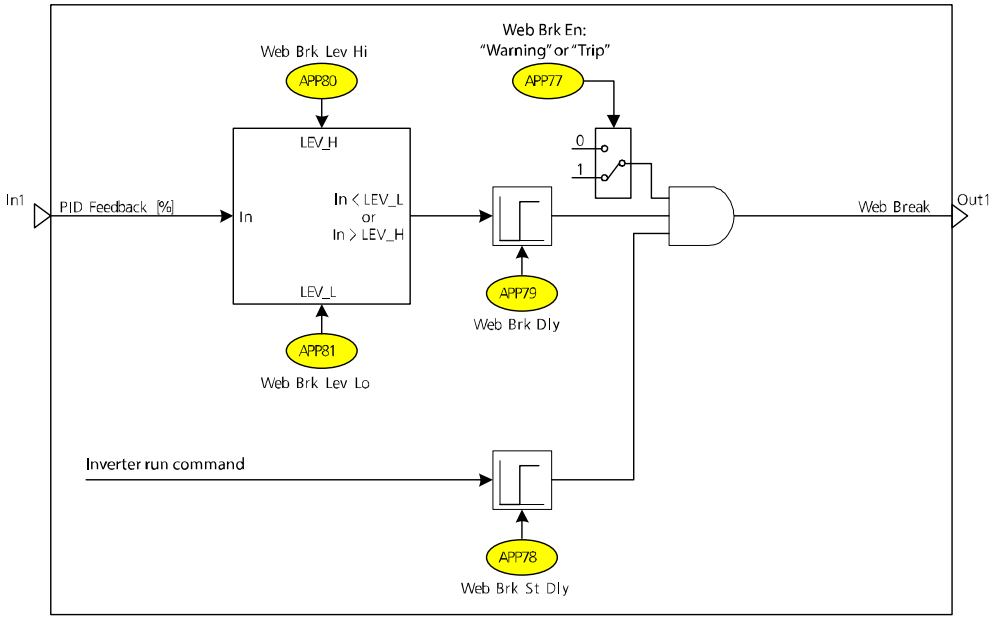

The closed loop tension control system uses a tension detection device such as a dancer or load cell. If the feedback value received by the tension detection device maintains a small or large value for more than the set time, the inverter considers that the web material can rupture and notifies to the upper controller through the multifunction output terminal. Also, the inverter starts a proper protective operation according to the settings.

Group	Code	Keypad display	Name	Default setting	Range
OUT	31–33	Relay 1, 2, Q1	Multifunction output terminal	Web Break	-
APP	77	Web Brk En	Web break detection feature selection	0: None	0 None 1 Warning 2 Free-run
APP	78*	Web Brk St Dly	Web break detection delay time during initial booting	10.0 [sec]	0.0–300.0 [sec]
APP	79*	Web Brk Dly	Web break detection delay time	5.0 [sec]	0.0–300.0 [sec]
APP	80*	Web Brk Lev Hi	Maximum web break detection	80.0 [%]	APP80, 100.0 [%]
APP	81*	Web Brk Lev Lo	Minimum web break detection	20.0 [%]	0.0–APP79 [%]

* The code is displayed when APP77 (Web Brk En) is set to "Warning" or "Free-run."

Code and feature	Description
APP-77 Web Brk En	When "None" is selected, the web break detection feature does not operate. When "Free-run" is selected, the inverter free-run stops when a web break is detected. If the multifunction output terminal is set to "29: Trip," the multifunction output terminal becomes On. When "Warning," the default setting, is selected and a web break is detected, the inverter does not free-run stop and operates normally. The Warning is displayed on the digital screen. If the multifunction output terminal is set to "40: Web Break," only the selected multifunction output terminal becomes On. When the user issues a stop command to the inverter and the inverter decelerates and is completely stopped, the Warning on the digital screen disappears and the multifunction output set to "40: Web Break" becomes Off.
APP-78 Web Brk St Dly	The web break detection feature does not operate from the inverter's initial startup to the time set in this code. Because the position of the dancer or load cell is unstable during the initial startup and web break detection during this period is meaningless.
APP-79 Web Brk Dly	If the amount of analog feedback from the dancer or load cell remains in more than the web break detection level (APP80: Web Brk Lev Hi) or in less than the web break detection level (APP81: Web Brk Lev Lo) for the time specified in this code, the inverter makes a decision about the Web Break status.
APP-80 Web Brk Lev Hi	Web break detection starts when the amount of analog feedback is more than the value specified in this code.
APP-81 Web Brk Lev Lo	Web break detection starts when the amount of analog feedback is less than the value specified in this code.

2.10 Web feature without diameter calculation part

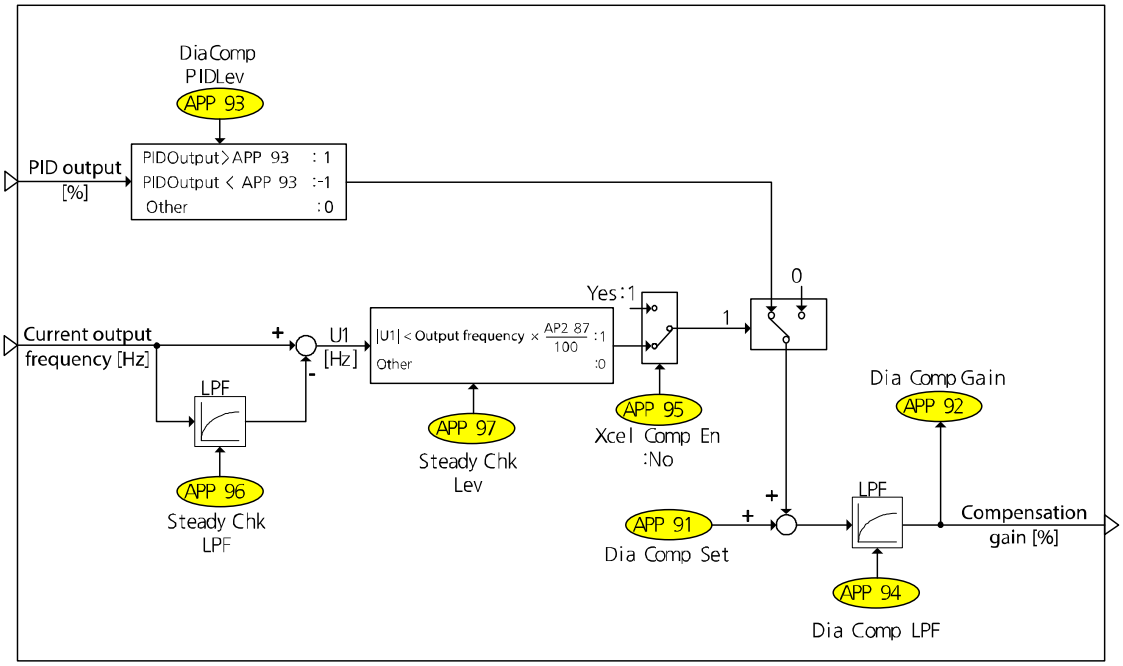

2.10.1 Compensation gain calculation

If information about diameter of the bobbin used in the closed loop tension control system does not exist or if the number of bobbins is more than the configurable value, the inverter can be controlled without compensation using a gain calculation. When APP90 is set to "Yes," the speed reference is calculated using the main speed, compensation gain, and PID output value.

When a user configures the compensation gain APP91 (Dia Comp Set) before the operation and operation starts, the compensation gain [%] is calculated by comparing the PID output value and the reference value at APP93 (DiamComp PIDLev). The calculated gain value appears at APP92 (Dia Comp Gain).

When the inverter is stopped, the APP92 (Dia Comp Gain) value is changed to the default compensation gain at APP91 (Dia Comp Set).

Group	Code	Keypad display	Name	Default setting	Range	
APP	90	Dia Dis Mode	Web without diameter calculation selection	0: No	0	No
					1	Yes
APP	91*	Dia Comp Set	Diameter compensation gain initial value	100.0 [%]	0.0–300.00 [%]	
APP	92*	Dia Comp Gain	Diameter compensation gain monitor	Read Only [%]		
APP	93*	DiaComp PIDLev	Calulation standard PID output value	10.00 [%]	0.00–100.00 [%]	
APP	94*	Dia Comp LPF	Diameter compensation gain filter	50.0 [sec]	0.0–300.0 [sec]	

* The code is displayed when APP90 (Dia Dis Mode) is selected to "1: Yes."

Code and feature	Description
APP-90 Dia Dis Mode	Set this to control the closed loop tension system without the diameter calculation.
APP-91 Dia Comp Set	Set the initial diameter compensation gain value. When using various bobbins, setting the diameter value for the medium size bobbin helps to carry out proper control of every bobbin.
APP-92 Dia Comp Gain	When stopped, the value configured at APP91 is displayed. When operation starts, the compensation gain value calculated by the compensation gain calculation condition is displayed.
APP-93 DiaComp PIDLev	Sets the PID output standard to the calculated diameter compensation gain. If the PID output value is larger than the set value, the compensation gain value increases. On the other hand, if the PID output value is smaller than the negative (-) value of the set value, the compensation gain value decreases.
APP-94 Dia Comp LPF	Sets the time to the calculated diameter compensation gain. Set a small APP94 value for quick control.

2.10.2 Stop gain calculation during acceleration/deceleration feature

If compensation gain is calculated during acceleration/deceleration, the PID output value becomes an unstable transient and proper gain calculation become unavailable. But if compensation gain is not calculated when the acceleration/deceleration time is very long, the PID output value may become saturated. Therefore, an appropriate choice necessary, according to the system.

Group	Code	Keypad display	Name	Default setting	Range	
APP	95*	Xcel Comp En	Diameter compensation gain during acceleration/deceleration selection	0: No	0	No
					1	Yes
APP	96**	Steady Chk LPF	Constant speed judgment speed filter	1.0 [sec]	0.0–100.0 [sec]	
APP	97**	Steady Chk Lev	Constant speed judgment speed difference	1.00 [%]	0.00–50.00 [%]	

* The code is displayed when APP90 (Dia Dis Mode) is selected to "1: Yes."
** The code is displayed when APP95 (Xcel Comp En) is set to "0: No."

Code and feature	Description
APP-95 Xcel Comp En	This selects the diameter compensation gain calculation during acceleration/deceleration. When "No" is selected, the compensation gain calculation is executed only in the constant speed section. When "Yes" is selected, the compensation gain calculation is executed in all acceleration/deceleration sections.
APP-96 Steady Chk LPF	If the diameter compensation gain calculation is executed only in the constant speed section, this code applies a Low Pass Filter to the current output frequency to be compared with the current output frequency to decide the constant speed section.
APP-97 Steady Chk Lev	If the diameter compensation gain calculation is executed only in the constant speed section, this code sets the difference between the current output frequency and the current output frequency after passing through the filter to decide the constant speed section. If the difference is more than the value set at APP97, the inverter judges the section as an acceleration/deceleration section and does not calculate the compensation gain.

3 Capstan operation

3.1 Introductions

A capstan is a device that rolls and pulls heavy objects at a constant speed.

The capstan is located between the unwinder and winder in steel, steel making, and iron making processes, and allows for a continuous process by maintaining tension.

Same as the winder/unwinder feature, the capstan feature of the S100 inverter receives feedback of the analog amount from the tension control detection device, such as a dancer and load cell, and maintains tension by operating the PID controller.

The S100 inverter's closed loop tension control system for web (winding) applications (Web-PID controller) is slightly different from a generic PID controller.

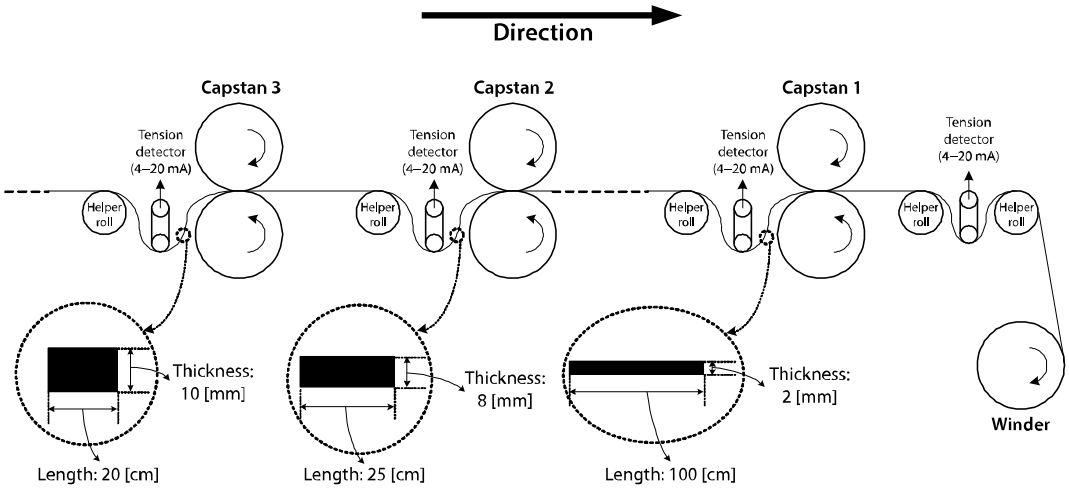

[Principle of capstan operation]

As shown in the above figure, the speed of capstan rotation must become faster as the thickness of web material gets thinner during the continuous process. Materials that have different thicknesses and lengths must be processed at the same time because the material must not lean to one side so that the continuous process is properly processed. The materials for each process are different, there is no material loss in each process and the volume of materials is always the same. Therefore, the length of material that is processed in capstan 1 (100 [cm]) is four times of the length of material processed in capstan 2 (25 [cm]) because the thickness of the material processed in capstan 1 (2 [mm]) is 1/4 of the thickness of material that is processed in capstan 2 (8 [mm]). Therefore, the rotation speed of capstan 1 must be four times faster than the speed of capstan 2 to process materials of different

lengths in the same period of time.

In this principle, formula 2.1.1 is used for capstan operation. The formula is similar to formula 1.1.1 of winder/unwinder.

$$Motor\ speed\ [rpm] = \frac{Line\ speed\ [mpm]}{Diameter \times \pi\ [m]} \quad - Formula\ (1.1.1)$$

$$Motor\ speed\ [rpm] = \frac{Line\ speed\ [mpm]}{Diameter\ of\ caps\ \tan \times \pi\ [m]} \times \frac{S\ \tan dard\ material\ thickness\ [m]}{Current\ material\ thickness\ [m]} - Formula\ (2.1.1)$$

The motor speed, inverter's output frequency, is controlled and the current material thickness is internally calculated by the Web PID controller. The inverter's output frequency is finally decided using the current material thickness calculated using formula 2.1.1.

This method provides a more stable performance than the method that controls the capstan tension using only a generic PID controller. Since the internally calculated material thickness guarantees the inverter's output frequency once more and this makes the Web PID controller to cover a very small proportion of inverter's output frequency. Therefore, the risk that the output of Web PID controller will become saturated disappears and the forced oscillation of I controller output decreases sharply.

Other main features include:

- Removing dancer or load cell transients during the operation (related code: APP50)
- Quick stop while maintaining the tension (related code: APP89)
- Senses imminent rupture of the web material (related code: APP77–81)

To use capstan feature of S100, configure as shown below:

Group	Code	Keypad display	Name	Setting value
APP	01	App Mode	Application selection	5: Web Control
APP	02	Web Mode Sel	Tension control operation mode selection	2: Capstan

3.2 Entire structure

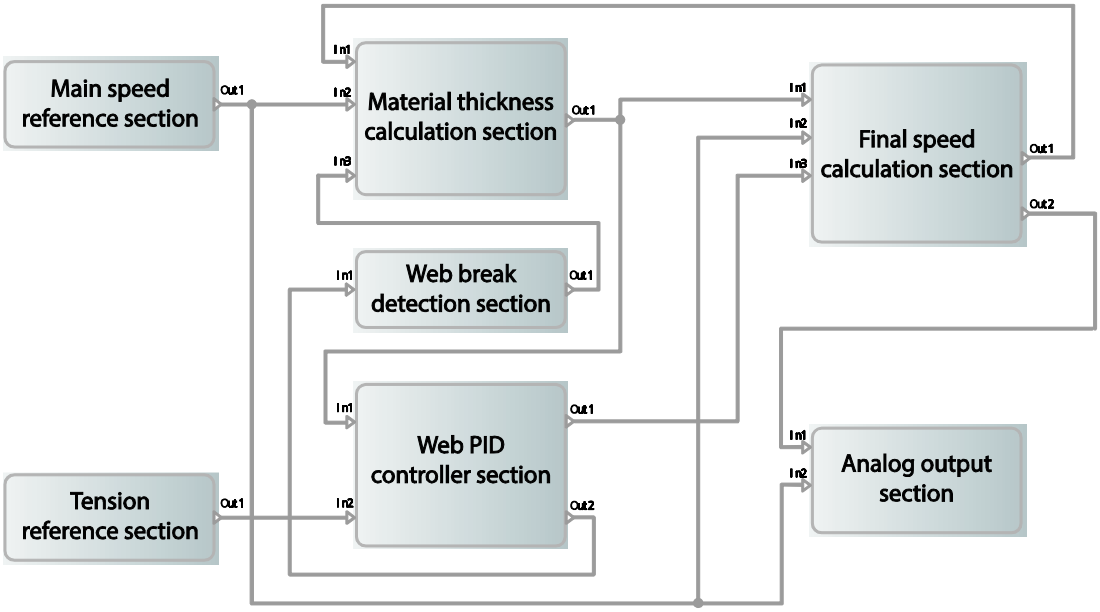

Input and output of each part are as follows:

Part	Input		Output	
Main speed reference section	-		Out1	Main speed [%]
Tension reference section	-		Out1	Tension reference [%]
Web PID controller part	In1	Thickness [%]	Out1	PID output [%]
	In2	Tension reference [%]	Out2	PID Feedback [%]
Material thickness calculation section	In1	Current output frequency [Hz]	Out1	Thickness [%]
	In2	Main speed [%]		
	In3	Web Break occurrence (0/1)		
Final speed calculation section	In1	Thickness [%]	Out1	Final speed reference [Hz]
	In2	Main speed [%]		
	In3	PID output [%]	Out2	Main speed + PID [%]
Analog output section	In1	Main speed + PID [%]	-	
	In2	Main speed [%]		
Web break detection section	In1	PID Feedback [%]	Out1	Web Break occurrence (0/1)

3.3 Main speed reference section

This section is the same as the main speed reference section of the winder/unwinder. Refer to **2.3 Main speed command on page 6**.

3.4 Tension reference section

This section is the same as the tension reference section of the winder/unwinder. Refer to **2.4 Tension reference section on page 9**.

3.5 Web PID controller section

This section is the same as the Web PID controller section of the winder/unwinder. Refer to **2.5 Web PID controller part on page 14**.

3.6 Analog output section

This section is the same as the analog output section of the winder/unwinder. Refer to **2.8 Analog output part on page 34**.

3.7 Web break detection section

This section is the same as the web break detection section of the winder/unwinder. Refer to **2.9 Web break detection section on page 35**.

3.8 Material thickness calculation section

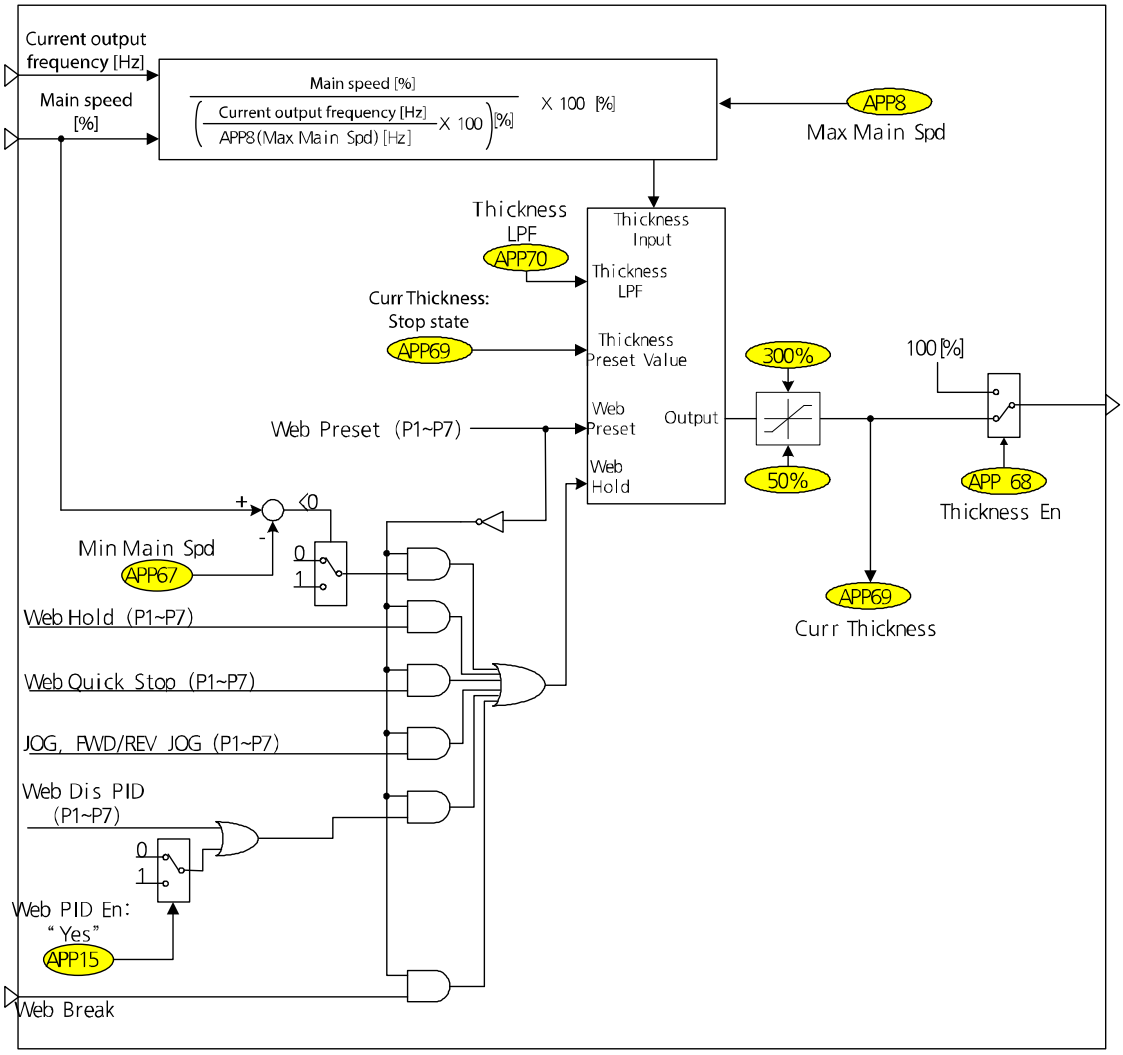

The following figure shows the closed loop tension control system's continuous process. The thickness of the web material decreases as the process progresses. However, the material input volume in each capstan is constant. Therefore, as shown in the figure, the material length of capstan 3, 2, and 1 can be expected to 20 [cm], 25 [cm], and 100 [cm] respectively when considering the material thickness input to capstan 3, 2, and 1 is 10 [mm], 8 [mm], and 2 [mm] respectively. To prevent material from leaning to one side and to ensure normal operation during the continuous process, each capstan's rotation speed must determine the order of capstan 1 > capstan 2 > capstan 3.

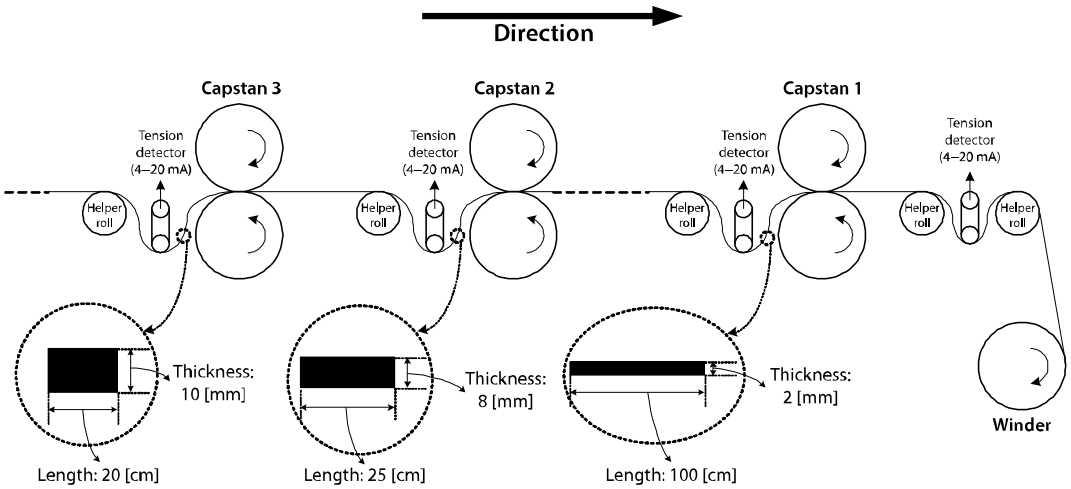

[Principle of capstan operation]

In the tension control system, the line speed of a capstan in a continuous process, motor speed, and thickness of material correlate as explained in formula 2.8.1.

$$\text{Motor speed [rpm]} = \frac{\text{Line speed [mpm]}}{\text{Diameter of capstan} \times \pi \text{ [m]}} \times \frac{\text{Standard material thickness [m]}}{\text{Current material thickness [m]}} \quad \text{– Formula (2.8.1)}$$

As shown in formula 2.8.1, the motor speed [rpm] is determined by the line speed [mpm] and current material thickness [m]. Therefore, the current material thickness must be calculated and estimated during the operation. Formula 2.8.2 is a modification of formula 2.8.1. The material thickness can be estimated using formula 2.8.2.

$$\text{Estimated current material thickness [m]}$$

$$= \frac{\text{Line speed [mpm]}}{\text{Motor speed [rpm]} \times (\text{Diameter of capstan} \times \pi) \text{ [m]}} \times \text{Standard material thickness [m]} \quad \text{– Formula (2.8.2)}$$

3.8.1 Material thickness initialization feature

Group	Code	Keypad display	Name	Default setting	Range	
In	65-71	Px Define	Multifunction input settings	Web Preset	-	
APP	68	Thickness En	Material thickness calculation selection	1: Yes	0	No
					1	Yes
APP	69	Curr Thickness	Initial material thickness setting and currently calculating material thickness display	100.0 [%]	50.0–300.00 [%]	

Code and feature	Description
APP-69 Curr Thickness	Enter the initial material thickness [%] in a stopped state. This cannot be set during operation. The material thickness being calculated is displayed during the operation. The example of setting this code is shown below: In the "Principle of capstan operation" figure, when installing the inverter to capstan 1, capstan 2, and capstan 3, 100.0 [%] is entered at APP69 (Curr Thickness) for each inverter during the stop status. When operation starts, the estimated material thickness values that are calculated in the iS7 are displayed at APP69 (Curr Thickness) of each inverter. If the main speed and gear ratio are accurately considered in each capstan and accurate values are calculated and entered at APP08 (Max Main Spde), the APP69 (Curr Thickness) value of each inverter will change slowly within a range of 100 [%] ± 5 [%]. If the displayed APP69 (Curr Thickness) value is less than 80 [%] (Approx.), that means the value entered at APP08 (Max Main Spd) is too small. Also, if the displayed APP69 (Curr Thickness) value is more than 120 [%] (Approx.), that means the value entered at APP08 (Max Main Spd) is too large. If the entered APP08 (Max Main Spd) value is not accurate, confirm the inverter's output frequency when a main speed value of 100 [%] is entered, and enter the value at APP08 (Max Main Spd). Or, substitute the line speed with a measurement provided by a portable tachometer, gear ratio (or belt ratio), and diameter of capstan to the formula 2.8.4, and enter the calculated value at APP08 (Max Main Sped).

Caution

Make sure the multifunction input "Web Preset" is Off. Then material thickness cannot be calculated if the multifunction input "Web Preset" is On.

3.8.2 Material thickness calculation feature

Group	Code	Keypad display	Name	Default setting	Range	
APP	68	Thickness En	Material thickness calculation selection	1: Yes	0	No
					1	Yes
APP	69	Curr Thickness	Initial thickness settings (stop status) or current thickness display (in operation)	100.0 [%]	50.0–300.00 [%]	
APP	70	Thickness LPF	Material thickness calculation filter	30.0 [sec]	0.0–300.0 [sec]	
APP	08	Max Main Spd	Frequency to the main speed 100%	60.0 [Hz]	DRV19–DRV20 [Hz]	

Formula 2.8.2 can be reconfigured like formula 2.8.3 when converting to the [%] scale.

$$\text{Estimated current material thickness [\%]} = \frac{\text{Main speed input [\%]}}{\dfrac{\text{Current output frequency [Hz]}}{\text{APP08 (Max Main Freq)}} \times 100\text{[\%]}} \times 100\text{[\%]} \quad \text{– Formula (2.8.3)}$$

100 [%], that is multiplied to the right hand side of formula 2.8.3, is the standard thickness of material. This estimated material thickness [%] is limited to a maximum of 300 [%] and a minimum of 50 [%]. You can adjust the calculation time constant of the material thickness [%] by adjusting the time constant of the estimated material thickness [%] at APP70 (Diameter LPF).

The following explains how the material thickness [%] is estimated during the inverter operation using formula 2.8.3.

In the "Principle of capstan operation" figure, consider if APP69 (Curr Thickness) of capstan 2 is changed from 100 [%], the default setting, to 150 [%]. The inverter of capstan 2 now recognizes the material thickness as 150 [%]. This means the inverter of capstan 2 internally recognizes the material thickness as 8 x 1.5 = 12 [mm] while the actual material thickness in capstan 2 is 8 [mm]. The amount of tension applied to the dancer or load cell decreases because the capstan is operated 1-1.5 times slower than when the material thickness is 100 [%]. Therefore, the output of the Web PID controller becomes a negative (-) value and the current output frequency [Hz] of formula 2.8.3 increases. The estimated material thickness [%] in formula 2.8.3 decreases and converges to 100 [%] (approx.) of the actual material thickness processed in capstan 2, because the estimated material thickness [%] is inversely proportional to the current output frequency [Hz].

The estimated material thickness [%] is a very important element in deciding the inverter's final speed reference [Hz]. The details are covered in section 2.9 "Final speed calculation section."

Code and feature	Description
APP-68 Thickness En	Select whether or not to use the material thickness calculation feature. When "No" is selected, the thickness of material is not calculated.
APP-69 Curr Thickness	Enter the initial material thickness [%] in a stopped state. This cannot be set during operation. The material thickness being calculated is displayed during the operation.
APP-70 Thickness LPF	Set the delay time constant of the material thickness [%] calculation.
APP-08 Max Main Spd	Enter the inverter output frequency when the main speed reference is 100 [%]. If you know the machine information, such as line speed, diameter of capstan, and belt ratio, you can calculate APP08 (Max Main Spd) using formula 2.8.4. The following is an example. In the "Principle of capstan operation" figure, if the diameter of capstan 1 is 0.4 [m], the maximum line speed of this system is 900 [mm] and the four pole motor and the belt rate (motor is faster) are 3.2/1. At this time, the value that is to be entered to APP08 (Max Main Spd) can be calculated as follows. $APP08\,(Max\ Main\ Spd) = \frac{900\,[mpm]}{0.40\,[m] \times \pi} \times 3.2\,(Belt\ ratio) \times \frac{4\,(Number\ of\ pole)}{120} = 76.43\,[Hz]$

3.8.3 Material thickness calculation stop feature

Group	Code	Keypad display	Name	Default setting	Range
In	65–71	Px Define	Multifunction input settings	Web Hod	-
APP	67	Min Main Spd	Minimum main speed	0.0 [%]	0.0–100.00 [%]

The material thickness calculation must be stopped when one of the followings occurs — multifunction input "Web Hold" is On, jog operation, Web PID prohibition status, slow speed under APP67 (Min Main Spd), and quick stop section by the multifunction input "Web Quick Stop". The material thickness calculation is meaningful only during normal operation.

The thickness calculation is stopped under the following conditions:

- Multifunction input "Web Hold": On
- Main speed reference [%] < APP67 (Min Main Sped)
- Quick stop by the multifunction input "Web Quick Stop": On
- Break sensing status (Web Break)
- Multifunction input "Web Dis PID": On
- APP15 (Web PID En): Yes
- Jog operation is entered

3.9 Final speed calculation section

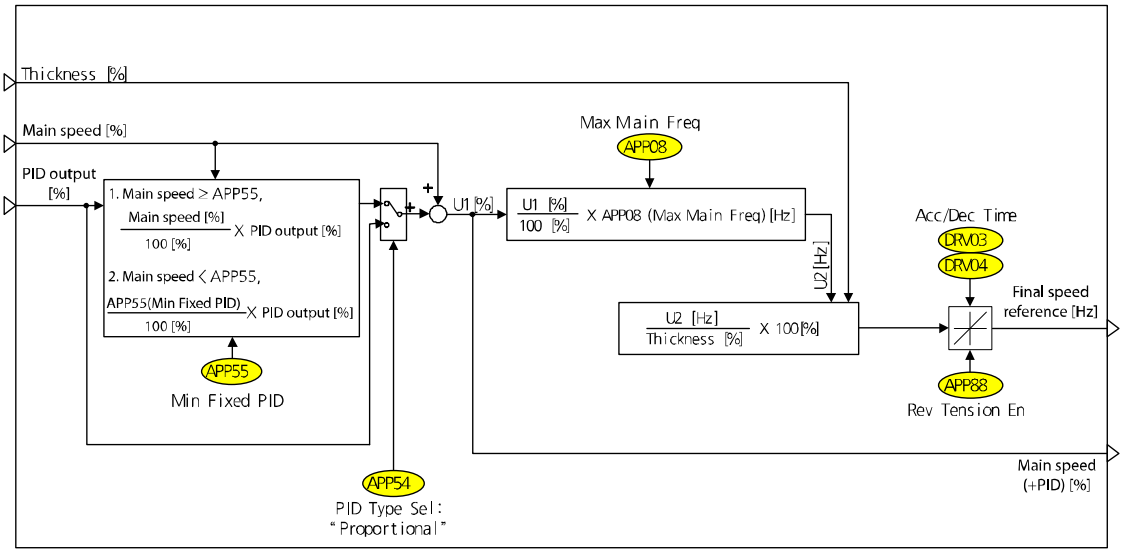

[Final speed calculation section (capstan)]

The final speed calculation section determines the inverter's final output frequency [Hz] using the main speed (In3: main speed [%]) calculated in the main speed reference section, PID output (In4: PID output [%]) and error change compensation frequency (In1) calculated in the Web PID controller section, and the diameter (In2: Thickness [%]) calculated in the material thickness calculation section.

3.9.1 PID output method (fixed/unfixed PID controller)

The details of this feature are the same as 2 **Winder/Unwinder operation**. Refer to **2.7.1 PID output method (fixed/unfixed PID controller) on page 27**.

Final speed [Hz] calculation

In the earlier diagram, U1 [%] is "main speed [%] + PID output [%]" and can be reconfigured like 2.9.1 when converting to the [Hz] scale.

$$Main\ speed + PID\ output\ [Hz] = \frac{Main\ speed + PID\ output\ [\%]}{100.0\ [\%]} \times APP08\ (Max\ Main\ Spd)\ [Hz] - Formula\ (2.9.1)$$

Formula 2.9.2 is a modification of formula 2.8.1 in **3.8 Material thickness calculation section**. 100 [%], that is multiplied on the right-hand side of formula 2.9.2, is the standard thickness of material. This value is the fixed value.

The final speed [Hz] is calculated and output using formula 2.9.2.

$$Motor\ speed\ [rpm] = \frac{Line\ speed\ [mpm]}{Diameter\ of\ caps\ \tan \times \pi\ [m]} \times \frac{S\tan dard\ material\ thickness\ [m]}{Current\ material\ thickness\ [m]} - Formula\ (2.8.1)$$

$$Main\ speed\ [Hz] = \frac{Main\ speed + PID\ output\ [\%]}{Estimated\ material\ thickness\ [\%]} \times 100\ [\%] \quad - Formula\ (2.9.2)$$

Caution

The final speed [Hz] of formula 2.9.2, which is periodically calculated in the final speed calculation section, accelerates/decelerates frequently. At this time, the acceleration/deceleration time is DRV03 (Acc Time) and DRV04 (Dec Time).
DRV03 (Acc Time) and DRV04 (Dec Time) can be set separately, but must be set to a time shorter than 2.0 [sec] for quick reflection of the final speed.

3.9.2 Reverse slow speed feature

The details of this feature are the same as 2 **Winder/Unwinder operation**. Refer to **2.7.4 Reverse slow speed feature on page 30**.

3.9.3 Splice feature

The splice feature is not supported in capstan operation mode.

4 Advanced feature group (PAR → APP)

The codes highlighted in gray are displayed only when the related codes are selected.
SL: Sensorless vector control feature (dr.09)
***O**/**X**: Writable/unwritable during operation, **7/L/A**: Keypad/LCD loader/common

Code	Comm. Address	Name	Keypad Display	Setting Range		Initial Value	Property*	V/F	SL	Ref.
00	-	Jump code	Jump Code	1–99		9	O/A	O	O	
01	0h1801	Advanced feature selection	App Mode	0	None	0: None	X/A	O	O	
				2	Proc PID					
				5	Web Control					
02[1]	0h1802	Web control mode selection	Web Mode Sel	0	Winder	0: Winder	X/A	O	O	
				1	Unwinder					
				2	Capstan					
03[1]	0h1803	Web hide function display selection	WebFunc Shown	0	No	0: No	O/A	O	O	
				1	Yes					
04[1]	0h1804	Web PID hide function display selection	WebPID Shown	0	No	0: No	O/A	O	O	
				1	Yes					
05[1]	0h1805	Main speed display	Main Spd Disp	0–100.00 [%]		-	-/A	O	O	
06[1]	0h1806	Main speed command method	Main Spd Src	0	Keypad	0: Keypad	X/A	O	O	
				1	V1					
				3	V2					
				4	I2					
				5	Int 485					
				7	FieldBus					
				11	Pulse					
				12	V3					
				14	V4					
				15	I4					
07[2]	0h1807	Main speed command (keypad)	Main Spd Set	0–100.00 [%]		0.00	O/A	O	O	

[1] The code is displayed only when AP.01 is set to 5 (Web Control).

[2] The code is displayed only when AP.06 is set to 0 (Keypad).

Code	Comm. Address	Name	Keypad Display	Setting Range		Initial Value	Property*	V/F	SL	Ref.
08[1]	0h1808	Frequency to the main speed reference 100%	Max Main Spd	Starting frequency - maximum frequency [Hz]		60.00	O/A	O	O	
09[3]	0h1809	Maximum line speed [mpm]	Max Line Spd	1-5000.0 [mpm]		565.2	X/A	O	O	
10[3]	0h180A	Gear ratio	Gear Ratio	0.1-100.00		1.00	X/A	O	O	
11[3]	0h180B	Minimum diameter [m]	Min Dia [m]	0.01–5.000 [m]		0.100	X/A	O	O	
12[1]	0h180C	Main speed acceleration/ deceleration selection	Main XcelT En	0	No	0: No	O/A	O	O	
				1	Yes					
13[4]	0h180D	Main speed acceleration time	Main Spd AccT	0.0–300.0 [sec]		10.0	O/A	O	O	
14[4]	0h180E	Main speed deceleration time	Main Spd DecT	0.0–300.0 [sec]		20.0	O/A	O	O	
15[1]	0h180F	Web PID control selection	Web PID En	0	No	1: Yes	O/A	O	O	
				1	Yes					
16[5]	0h1810	PID output monitor	PID Output	[%]		-	-/A	O	O	
17[5]	0h1811	PID reference monitor	PID Ref Value	[%]		-	-/A	O	O	
18[5]	0h1812	PID feedback monitor	PID Fdb Value	[%]		-	-/A	O	O	
19[5]	0h1813	PID reference source selection	PID Ref Source	0	Keypad	0: Keypad	X/A	O	O	
				1	V1					
				3	V2					
				4	I2					
				5	Int 485					

[3] The code is displayed only when AP.03 is set to 1 (Yes).

[4] The code is displayed only when AP.12 is set to 1 (Yes).

[5] The code is displayed only when AP.01 is set to 2 (Proc PID) or 5 (Web Control).

Code	Comm. Address	Name	Keypad Display	Setting Range		Initial Value	Property*	V/F	SL	Ref.
				7	FieldBus					
				11	Pulse					
				12	V3					
				14	V4					
				15	I4					
20[6]	0h1814	PID reference source settings	PID Ref Set	-100.00–100.00 [%]		50.00	O/A	O	O	
21[5]	0h1815	PID feedback source selection	PID Fdb Source	0	V1	0: V1	X/A	O	O	
				2	V2					
				3	I2					
				4	Int 485					
				6	FieldBus					
				10	Pulse					
				11	V3					
				13	V4					
				14	I4					
22[5]	0h1816	PID controller proportional gain	PID P-Gain	0-1000.0 [%]		50.0	O/A	O	O	
23[5]	0h1817	PID controller integral time	PID I-Time	0-200.0 [sec]		10.0	O/A	O	O	
24[7]	0h1818	PID controller derivative time	PID D-Time	0 - 1000 [msec]		0	O/A	O	O	
25[8]	0h1819	PID controller conversion compensation gain	PID F-Gain	0-1000.0 [%]		0.0	O/A	O	O	
26[8]	0h181A	Proportional gain scale	P Gain Scale	0-100.0 [%]		100.0	X/A	O	O	

[6] The code is displayed only when AP.19 is set to 0 (Keypad).

[7] The code is displayed only when AP.01 is set to 2 (Proc PID) or AP.04 is set to 1 (Yes).

[8] The code is displayed only when AP.01 is set to 2 (Proc PID).

Code	Comm. Address	Name	Keypad Display	Setting Range		Initial Value	Property*	V/F	SL	Ref.
27[7]	0h181B	PID output filter	PID Out LPF	0-10000 [msec]		0	O/A	O	O	
28[8]	0h181C	PID mode	PID Mode	0	Process PID	0: Process PID	X/A	O	O	
				1	Normal PID					
29[8]	0h181D	Maximum PID frequency	PID Limit Hi	Minimum PID frequency-300.00 [Hz]		60.00	O/A	O	O	
30[8]	0h181E	Minimum PID frequency	PID Limit Hi	-300.00-Maximum PID frequency [Hz]		-60.00	O/A	O	O	
31[5]	0h181F	PID output reverse	PID Out Inv	0	No	0: No	O/A	O	O	
				1	Yes					
32[5]	0h1820	PID output scale	PID Out Scale	0.1 - 1000.0 [%]		30.0	O/A	O	O	
34[8]	0h1822	PID controller operation frequency	Pre-PID Freq	0-Maximum frequency [Hz]		0	X/A	O	O	
35[8]	0h1823	PID controller operation level	Pre-PID Exit	0-100.0 [%]		0.0	X/A	O	O	
36[8]	0h1824	PID controller operation delay time	Pre-PID Delay	0-9999 [sec]		600	O/A	O	O	
37[8]	0h1825	PID sleep mode delay time	PID Sleep DT	0-999.9 [sec]		60.0	O/A	O	O	
38[8]	0h1826	PID sleep mode frequency	PID Sleep Freq	0-Maximum frequency [Hz]		0	O/A	O	O	
39[8]	0h1827	PID wake up level	PID WakeUp Lev	0-100 [%]		35	O/A	O	O	
40[8]	0h1828	PID wake up mode	PID WakeUp	0	Below Level	0: Below Level	O/A	O	O	

Code	Comm. Address	Name	Keypad Display	Setting Range		Initial Value	Property*	V/F	SL	Ref.
		settings	Mod	1	Above Level					
				2	Beyond Level					
42[7]	0h182A	PID controller unit selection	PID Unit Sel	0: % 1: Bar 2: mBar 3: Pa 4: kPa 5: Hz 6: rpm 7: V 8: I 9: kW 10: HP 11: ℃ 12: ℉		0: %	O/A	O	O	
43[7]	0h182B	PID unit gain	PID Unit Gain	0-300.00 [%]		100.00	O/A	O	O	
44[7]	0h182C	PID unit scale	PID Unit Scale	0	x 100	2: x1	O/A	O	O	
				1	x 10					
				2	x 1					
				3	x 0.1					
				4	x 0.01					
45[7]	0h182D	PID second proportional gain	PID P-Gain 2	0-1000.0 [%]		100.0	X/A	O	O	
46[9]	0h182E	PID second integral gain	PID I-Time 2	0-1000.0 [sec]		100.0	X/A	O	O	
48[9]	0h1830	Tension reference ramp time	PID Ref RampT	0-300.0 [sec]		0.0	O/A	O	O	
49[9]	0h1831	Proportional /integral gain switch time	PI Gain Ramp	0-300.0 [sec]		30.0	O/A	O	O	
50[1]	0h1832	PID output ramp time at initial booting	PID Out RampT	0-300.0 [sec]		5.0	O/A	O	O	

[9] The code is displayed only when AP.04 is set to 1 (Yes).

Code	Comm. Address	Name	Keypad Display	Setting Range		Initial Value	Property*	V/F	SL	Ref.
51[9]	0h1833	Maximum PID output [%]	PID Hi Lmt	Minimum PID output-100.0 [%]		100.0	O/A	O	O	
52[9]	0h1834	Minimum PID output [%]	PID Lo Lmt	-100.0-Maximum PID output [%]		-100.0	O/A	O	O	
53[9]	0h1835	PID I controller limit	PID I Limit	0-100.0 [%]		100.0	O/A	O	O	
54[1]	0h1836	PID controller type selection	PID Type Sel	0	Propor-tional	0: Propor-tional	O/A	O	O	
				1	Fixed					
55[10]	0h1837	Minimum value of the fixed PID controller	Min Fixed PID	0-50.0 [%]		20.0	O/A	O	O	
56[9]	0h1838	Proportional gain profiler selection	Profile P Mode	0	None	0: None	O/A	O	O	
				1	Linear					
				2	Square					
57[9]	0h1839	Profile gain	Profile P Gain	0.01 - 10.00 [%]		1.00	O/A	O	O	
58[1]	0h183A	Minimum bobbin diameter [%]	Min Diameter	5.0-100.0 [%]		10.0	X/A	O	O	
59[1]	0h183B	Current diameter display [%]	Curr Diameter	Minimum bobbin diameter-100.0 [%]		10.0	X/A	O	O	
60[1]	0h183C	Current bobbin display	Curr Bobbin	1-4		1	-/A	O	O	
61[1]	0h183D	Bobbin 1 diameter [%]	Bobbin1 Diamtr	Minimum bobbin diameter-100.0 [%]		10.0	O/A	O	O	
62[3]	0h183E	Bobbin 2 diameter [%]	Bobbin2 Diamtr	Minimum bobbin		15.0	O/A	O	O	

[10] The code is displayed only when AP.54 is set to 0 (Proportional).

Code	Comm. Address	Name	Keypad Display	Setting Range		Initial Value	Property*	V/F	SL	Ref.
				diameter-100.0 [%]						
63[3]	0h183F	Bobbin 3 diameter [%]	Bobbin3 Diamtr	Minimum bobbin diameter-100.0 [%]		20.0	O/A	O	O	
64[3]	0h1840	Bobbin 4 diameter [%]	Bobbin4 Diamtr	Minimum bobbin diameter-100.0 [%]		25.0	O/A	O	O	
65[1]	0h1841	Diameter calculation filter	Diameter LPF	0-300.0 [sec]		50.0	O/A	O	O	
66[3]	0h1842	Diameter calculation stop frequency	Web Hod Freq	0-30.00 [Hz]		5.00	O/A	O	O	
67[3]	0h1843	Minimum main speed	Min Main Spd	0-50.0 [%]		0.0	O/A	O	O	
68[11]	0h1844	Material thickness calculation selection	Thickness En	0	No	1: Yes	X/A	O	O	
				1	Yes					
69[12]	0h1845	Current thickness display [%]	Curr Thickness	50.0 - 300.0 [%]		100.0	X/A	O	O	
70[12]	0h1846	Material thickness calculation filter	Thickness LPF	0-300.0 [sec]		30.0	O/A	O	O	
72[3]	0h1848	Bypass gain	Bypass Gain	0-300.0 [%]		100.0	O/A	O	O	
73[3]	0h1849	Inertia compensati	Taper Sel	0	None	0: None	X/A	O	O	
				1	Linear					

[11] The code is displayed only when AP.02 is set to 2 (Capstan).

[12] The code is displayed only when AP.68 is set to 1 (Yes).

Code	Comm. Address	Name	Keypad Display	Setting Range		Initial Value	Property*	V/F	SL	Ref.
		on feature selection		2	Hyperbolic					
74[3]	0h184A	Inertia compensation setting value monitor	Taper Spt Val	-100.00-100.00 [%]		-	-/A	O	O	
75[3]	0h184B	Inertia compensation setting selection	Taper Source	0	Keypad	0: Keypad	X/A	O	O	
				1	V1					
				3	V2					
				4	I2					
76[13]	0h184C	Inertia compensation setting value (keypad)	Taper SetPt	-100.00-100.00 [%]		0.00	O/A	O	O	
77[1]	0h184D	Web break detection feature selection	Web Brk En	0	None	0: None	O/A	O	O	
				1	Warning					
				2	Free-Run					
78[14]	0h184E	Web break detection delay time at initial booting	Web Brk St Dly	0-300.0 [sec]		10.0	O/A	O	O	
79[14]	0h184F	Web break detection delay time	Web Brk Dly	0-300.0 [sec]		5.0	O/A	O	O	
80[14]	0h1850	Maximum web break detection	Web Brk Lev Hi	0-100.0 [%]		80.0	O/A	O	O	
81[14]	0h1851	Minimum web break detection	Web Brk Lev Lo	0-100.0 [%]		20.0	O/A	O	O	

[13] The code is displayed only when AP.75 is set to 0 (Keypad).

[14] The code is displayed only when AP.77 is set to 1 (Warning) or 2 (Free-Run).

Code	Comm. Address	Name	Keypad Display	Setting Range		Initial Value	Property*	V/F	SL	Ref.
83[3]	0h1853	Splice level	Splice Level	0-100.0 [%]		0.0	O/A	O	O	
84[3]	0h1854	Tension boost settings	Tns Boost In	0-50.00		0.00	O/A	O	O	
85[3]	0h1855	Tension boost type selection	Tns Boost Type	0	Fixed	0: Fixed	X/A	O	O	
				1	Propor-tional					
86[3]	0h1856	Tension down settings	Tns Down In	0-50.00		0.00	O/A	O	O	
87[3]	0h1857	Tension down type selection	Tns Down Type	0	Fixed	0: Fixed	X/A	O	O	
				1	Propor-tional					
88[1]	0h1858	Reverse slow speed feature selection	Rev Tension En	0	No	0: No	X/A	O	O	
				1	Yes					
89[1]	0h1859	Quick stop deceleration time	Q Stop Dec T	0.1-300.0 [sec]		3.0	O/A	O	O	
90[3]	0h185A	Web feature without diameter calculation selection	Dia Dis Mode	0	No	0: No	X/A	O	O	
				1	Yes					
91[15]	0h185B	Diameter compensati on gain initial value	Dia Comp Set	0.1-300.0 [%]		100.0	O/A	O	O	
92[15]	0h185C	Diameter compensati on gain monitor	Dia Comp Gain	0-300.0 [%]		-	-/A	O	O	

[15] The code is displayed only when AP.90 is set to 1 (Yes).

Code	Comm. Address	Name	Keypad Display	Setting Range		Initial Value	Property*	V/F	SL	Ref.
93[15]	0h185D	PID output value of the compensation gain calculation standard	DiaComp PIDLev	0-100.00 [%]		10.00	O/A	O	O	
94[15]	0h185E	Diameter compensation gain calculation filter	Dia Comp LPF	0-300.0 [sec]		50.0	O/A	O	O	
95[15]	0h185F	Diameter compensation gain calculation selection during acceleration/deceleration	Xcel Comp En	0	No	0: No	O/A	O	O	
				1	Yes					
96[16]	0h1860	Constant speed judgment speed filter	Steady Chk LPF	0-100.0 [sec]		1.0	O/A	O	O	
97[16]	0h1861	Constant speed judgment speed difference settings	Steady Chk Lev	0-50.00 [%]		1.00	O/A	O	O	
98[9]	0h1862	Web PID calculation cycle	PID Sample T	2–10 [msec]		2	X/A	O	O	
99[1]	0h1863	Dedicated software version	Web SW Ver	-		-	-/A	O	O	

[16] The code is displayed only when AP.96 is set to 0 (No).