Right choice for ultimate yield

LSIS strives to maximize customers' profit in gratitude of choosing us for your partner.

Human Machine Interface

XGT Panel Communication

XGT Panel Series

User's Manual

XP30-BTA
XP30-TTE
XP30-TTA
XP30-BTE
XP50-TTA
XP70-TTA
XP80-TTA
XP90-TTA

Safety Instructions

- Read this manual carefully before installing, wiring, operating, servicing or inspecting this equipment.
- Keep this manual within easy reach for quick reference.

LS Industrial Systems

http://eng.lsis.biz

Safety Instruction

Before using the product …

For your safety and effective operation, please read the safety instructions thoroughly before using the product.

- Safety Instructions should always be observed in order to prevent accident or risk with the safe and proper use the product.

- Instructions are separated into “Warning” and “Caution”, and the meaning of the terms is as follows;

⚠ **Warning**	This symbol indicates the possibility of serious injury or death if some applicable instruction is violated
⚠ **Caution**	This symbol indicates the possibility of slight injury or damage to products if some applicable instruction is violated

- The marks displayed on the product and in the user’s manual have the following meanings.

  ⚠ Be careful! Danger may be expected.

  ⚠ Be careful! Electric shock may occur.

- The user’s manual even after read shall be kept available and accessible to any user of the product.

Safety Instruction

Safety Instructions when designing

⚠ Warning

- **Please, install protection circuit on the exterior of PLC to protect the whole control system from any error in external power or PLC module.** Any abnormal output or operation may cause serious problem in safety of the whole system.
  - Install applicable protection unit on the exterior of PLC to protect the system from physical damage such as emergent stop switch, protection circuit, the upper/lowest limit switch, forward/reverse operation interlock circuit, etc.
  - If any system error (watch-dog timer error, module installation error, etc.) is detected during CPU operation in PLC, the whole output is designed to be turned off and stopped for system safety. However, in case CPU error if caused on output device itself such as relay or TR can not be detected, the output may be kept on, which may cause serious problems. Thus, you are recommended to install an addition circuit to monitor the output status.

- **Never connect the overload than rated to the output module nor allow the output circuit to have a short circuit**, which may cause a fire.

- **Never let the external power of the output circuit be designed to be On earlier than PLC power**, which may cause abnormal output or operation.

- **In case of data exchange between computer or other external equipment and PLC through communication or any operation of PLC (e.g. operation mode change), please install interlock in the sequence program to protect the system from any error**. If not, it may cause abnormal output or operation.

Safety Instruction

Safety Instructions when designing

⚠ Caution

- **I/O signal or communication line shall be wired at least 100mm away from a high-voltage cable or power line.** If not, it may cause abnormal output or operation.

Safety Instructions when designing

⚠ Caution

- **Use PLC only in the environment specified in PLC manual or general standard of data sheet.** If not, electric shock, fire, abnormal operation of the product or flames may be caused.

- **Before installing the module, be sure PLC power is off.** If not, electric shock or damage on the product may be caused.

- **Be sure that each module of PLC is correctly secured.** If the product is installed loosely or incorrectly, abnormal operation, error or dropping may be caused.

- **Be sure that I/O or extension connecter is correctly secured.** If not, electric shock, fire or abnormal operation may be caused.

- **If lots of vibration is expected in the installation environment, don't let PLC directly vibrated.** Electric shock, fire or abnormal operation may be caused.

- **Don't let any metallic foreign materials inside the product**, which may cause electric shock, fire or abnormal operation..

Safety Instruction

Safety Instructions when wiring

⚠ Warning

- **Prior to wiring, be sure that power of PLC and external power is turned off.** If not, electric shock or damage on the product may be caused.

- **Before PLC system is powered on, be sure that all the covers of the terminal are securely closed.** If not, electric shock may be caused

⚠ Caution

- **Let the wiring installed correctly after checking the voltage rated of each product and the arrangement of terminals.** If not, fire, electric shock or abnormal operation may be caused.

- **Secure the screws of terminals tightly with specified torque when wiring.** If the screws of terminals get loose, short circuit, fire or abnormal operation may be caused.

*

- **Surely use the ground wire of Class 3 for FG terminals, which is exclusively used for PLC**. If the terminals not grounded correctly, abnormal operation may be caused.

- **Don't let any foreign materials such as wiring waste inside the module while wiring,** which may cause fire, damage on the product or abnormal operation.

Safety Instruction

Safety Instructions for test-operation or repair

⚠ Warning

- **Don't touch the terminal when powered**. Electric shock or abnormal operation may occur.
- **Prior to cleaning or tightening the terminal screws, let all the external power off including PLC power.** If not, electric shock or abnormal operation may occur.
- **Don't let the battery recharged, disassembled, heated, short or soldered**. Heat, explosion or ignition may cause injuries or fire.

⚠ Caution

- **Don't remove PCB from the module case nor remodel the module.** Fire, electric shock or abnormal operation may occur.
- **Prior to installing or disassembling the module, let all the external power off including PLC power.** If not, electric shock or abnormal operation may occur.
- **Keep any wireless installations or cell phone at least 30cm away from PLC**. If not, abnormal operation may be caused.

Safety Instructions for waste disposal

⚠ Caution

- **Product or battery waste shall be processed as industrial waste.** The waste may discharge toxic materials or explode itself.

Revision History

Version	Date	Contents	Revised page
V 1.0	’07.4	First Edition	-
V 2.1	’10. 7	Communication driver added	CH10~CH31
		Error fixed	-
V 2.2	’12.10	1) DELTA DVP series driver added	CH32
		2) Fuji: MICREX-SX driver added	CH33
		3) AB DF-1 driver added	CH34
		4) HANYONG NUX Temperature Controller driver added	CH35
		5) RS Automation: N/Nx-CCU driver added	CH36
		6) XGT Servo driver added	CH37
		7) HIGEN Servo driver added	CH38
		8) KDT Systems CIMON PLC LOADER driver added	CH39

※ The number of User’s manual is indicated right part of the back cover.

ⓒ LS Industrial Systems Co., Ltd 2007 All Rights Reserved.

Thank you for purchasing the HMI of LS Industrial Systems Co., LTD.

For right use of the product, read carefully the manual to understand the functions, performance, installation and programming of the product you have purchased before use it and make sure that this manual is delivered to the final user and person in charge of maintenance.

The following manual deals with use of the product.

When necessary, read the following manuals and place an order.

Otherwise you can download PDF files by signing in our company's home page http://eng.lsis.biz/.

Related Manuals

Title	Contents	Serial Number
XGT Panel Communication User's Manual	This manual describes the line diagrams and communication settings necessary for connecting the XGT Panel products to control devices such as the PLC or inverter.	10310000758
XP-Builder User's Manual	This is the XGT Panel software manual describing the functions such as the display data, communication and environment setting, logging/recipe data backup, simulator and printing to use the XGT Panel products.	10310000759
XGT Panel User's Manual	This manual explains the specifications, features and system composition of the XGT Panel series.	10310000757
XP-Manager User's Manual	XP-Manager is software supporting diverse functions of XGT Panel. And communication between XGT Panels is available through XP Link.	10310001111

Chapter 1 Introduction ..... 1-1 ~ 1-1

1.1 Guide to Use This Manual 1-1

Chapter 2 Communication Introduction and Configuration ..... 2-1 ~ 2-9

2.1 Communication Introduction 2-1
2.2 Communication Connector Configuration 2-1
2.2.1 RS-232C connector configuration 2-1
2.2.2 RS-422/485 connector configuration 2-2
2.2.3 Ethernet connector configuration 2-2
2.3 Communication Specification 2-3
2.3.1 RS-232C specification 2-2
2.3.2 RS-422/485 specification 2-3
2.3.3 Ethernet specification 2-4
2.4 Communication Cable 2-4
2.4.1 RS-232C cable 2-4
2.4.2 RS-422/485 cable 2-5
2.4.3 Ethernet cable 2-5
2.5 Wiring Method 2-5
2.5.1 RS-232C cable 2-5
2.5.2 RS-422/485 cable 2-6
2.5.3 Ethernet cable 2-8

Chapter 3 LSIS: MASTER-K PLC ..... 3-1 ~ 3-10

3.1 PLC List 3-1
3.2 Wiring Diagram 3-2
3.2.1 CPU module direct connection method 3-2
3.2.2 Link method: Built-in Cnet 3-2
3.2.3 Link method: Cnet 3-3
3.2.4 Link method: FEnet 3-4
3.3 Communication Setting 3-5
3.3.1 CPU module direct connection method 3-5
3.3.2 Link method: Built-in Cnet 3-5
3.3.3 Link method: Cnet 3-7
3.3.4 Link method: FEnet 3-9
3.4 Available Device 3-10

Chapter 4 LSIS: GLOFA-GM PLC ..... 4-1 ~ 4-10

4.1 PLC List 4-1
4.2 Wiring Diagram 4-2

4.2.1 CPU module direct connection method 4-2
4.2.2 Link method: Built-in Cnet 4-3
4.2.3 Link method: Cnet....4-3
4.2.4 Link method: FEnet....4-4
4.3 Communication Setting....4-5
4.3.1 CPU module direct connection method 4-5
4.3.2 Link method: Built-in Cnet 4-5
4.3.3 Link method: Cnet....4-7
4.3.4 Link method: FEnet....4-9
4.4 Available Device....4-10

Chapter 5 LSIS: XGK PLC ....5-1 ~ 5-6

5.1 PLC List....5-1
5.2 Wiring Diagram 5-1
5.2.1 CPU module direct connection method 5-1
5.2.2 Link method: Cnet....5-2
5.2.3 Link method: FEnet....5-3
5.3 Communication Setting 5-3
5.3.1 CPU module direct connection method 5-3
5.3.2 Link method: Cnet....5-4
5.3.3 Link method: FEnet....5-5
5.4 Available Device....5-6

Chapter 6 LSIS: XGB PLC ....6-1 ~ 6-6

6.1 PLC List....6-1
6.2 Wiring Diagram 6-1
6.2.1 CPU module direct connection method 6-1
6.2.2 Link method: Built-in Cnet 6-2
6.2.3 Link method: Cnet....6-3
6.3 Communication Setting 6-4
6.3.1 CPU module direct connection method 6-4
6.3.2 Link method: Built-in Cnet 6-4
6.3.3 Link method: Cnet....6-5
6.4 Available Device....6-6

Chapter7 LSIS: XGI PLC ....7-1 ~ 7-6

7.1 PLC List....7-1
7.2 Wiring Diagram 7-1
7.2.1 CPU module direct connection method 7-1
7.2.2 Link method: Cnet....7-2
7.2.3 Link method: FEnet....7-3
7.3 Communication Setting 7-3

7.3.1 CPU module direct connection method 7-3
7.3.2 Link method: Cnet 7-4
7.3.3 Link method: FEnet 7-5
7.4 Available Device 7-6

Chapter 8 MITSUBISHI: MELSEC-Q PLC ..... 8-1 ~ 8-12

8.1 PLC List 8-1
8.2 Wiring Diagram 8-2
8.2.1 CPU direct connection method 8-2
8.2.2 Link method: Cnet 8-3
8.2.3 Link method: FEnet 8-4
8.3 Communication Setting 8-5
8.3.1 Link method: Cnet 8-5
8.3.2 Link method: FEnet 8-6
8.4 Available Device 8-12

Chapter 9 SYMBOL: Bar Code Scanner ..... 9-1~9-4

9.1 Bar Code Scanner List 9-1
9.2 Wiring Diagram 9-1
9.3 Communication Setting 9-2

Chapter 10 LS Industrial Systems : Inverter(MODBUS) ..... 10-1~10-7

10.1 Inverter List 10-1
10.2 Wiring Diagram 10-2
10.2.1RS-485 Communication Type 10-2
10.3 Communication Setting 10-3
10.4 Available Device 10-6

Chapter 11 LS Industrial Systems: Inverter(LS BUS) ..... 11-1~11-6

11.1 Inverter List 11-1
11.2 Wiring Diagram 11-2
11.2.1RS-485 Communication Type 11-2
11.3 Communication Setting 11-3
11.4 Available Device 11-6

Chapter 12 MODBUS RTU Protocol (Master) ..... 12-1~12-7

12.1 MODBUS Protocol Outline 12-1

12.1.1 Frame Structure 12-1
12.1.2 Displaying Data and Address 12-2
12.2 Wiring Diagram 12-2
12.2.1 RS-232C 12-2
12.2.2 RS-422 12-3
12.2.3 RS-485 12-3

12.3 Communication Setting 12-4
12.3.1 The example of setting PLC(XGK) 12-4
12.3.2 The example of setting XGT Panel 12-6
12.4 Available Device 12-7

Chapter 13 MODBUS TCP/IP Protocol (Master) ..... 13-1~13-6

13.1 PLC allowed to be connected 13-1
13.2 Wiring Diagram 13-1
13.3 Communication Setting 13-3
13.3.1 The example to set PLC(XGK) 13-3
13.3.2 The example to set XGT Panel 13-5
13.4 Available Device 13-6

Chapter 14 MITSUBISHI: MELSEC-A PLC ..... 14-1~14-10

14.1PLC List 14-1
14.2 Wiring Diagram 14-2
14.2.1Link type: Cnet 14-2
14.3 Communication Setting 14-4
14.3.1Link type: Cnet 14-4
14.4 Available Device 14-9

Chapter 15 OMRON: CS/CJ PLC ..... 15-1~15-13

15.1PLC List 15-1
15.2 Wiring Diagram 15-2
15.2.1 CPU Mode 15-2
15.2.2 Link mode: Cnet 15-3
15.2.3Link Mode: FEnet 15-5
15.3 Communication Setting 15-6
15.3.1 CPU Mode 15-6
15.3.2Link Mode: Cnet 15-7
15.3.3Link Mode: FEnet 15-10
15.4 Available Device 15-13

Chapter 16 OEMax Controls : Nx-CCU+ .....16-1~16-6

16.1 Available PLC.....16-1
16.2 Wiring Diagram.....16-1
16.2.1 RS-232C Connection 16-1
16.2.2 RS-485 Connection 16-2
16.3 Communication Setting.....16-3
16.3.1 PLC(OEMax) Setting.....16-3
16.3.2 XGT Panel Setting 16-5
16.4 Available Device 16-6

Chapter 17 AB: EtherNet/IP.....17-1~17-8

17.1 Available PLC.....17-1
17.2 Control/CompactLogix Series (EtherNet/IP).....17-1
17.2.1 Connection 17-1
17.2.2 Communication Setting 17-3
17.3 MicroLogix Series (EtherNet/IP) 17-4
17.3.1 Connection 17-4
17.3.2 Communication Setting 17-5
17.3.3 Device Nomenclature 17-6
17.4 Available Device 17-7

Chapter 18 MODBUS RTU PROTOCOL(Slave).....18-1~18-9

18.1 Communication Setting.....18-1
18.1.1 The example of PLC(XGT) setting 18-1
18.1.2 XGT Panel Setting 18-4
18.2 Available Device.....18-6
18.2.1Device Area.....18-6
18.2.2 HS Device 18-6

Chapter 19 MODBUS TCP/IP Protocol (Slave) .....19-1~19-10

19.1 Communication Setting.....19-1
19.1.1 The example of PLC(XGT) setting 19-1
19.1.2 XGT Panel Setting 19-4
19.2 Available Device.....19-6
19.2.1 Device Area.....19-6
19.2.2 HS Device 19-6

Chapter 20 YASKAWA MEMOBUS RTU(Master).....20-1~20-6

20.1 PLC List.....20-1
20.1.1 Available Device List.....20-1
20.1.2 Description on Protocol.....20-1
20.2 Wiring Diagram.....20-2
20.2.1 Link Mode.....20-2
20.3 Communication Setting.....20-3
20.3.1 Link Mode.....20-3
20.4 Available Device.....20-6

Chapter 21 KDT PLC.....21-1~21-5

21.1 PLC List.....21-1
21.2 Wiring Diagram.....21-1
21.2.1 Link Mode.....21-1
21.3 Communication Setting.....21-3
21.3.1 Link Mode.....21-3
21.4 Available Device.....21-5

Chapter 22 MITSUBISHI: MELSEC-FX PLC.....22-1~22-6

22.1 PLC List.....22-1
22.2 Wiring Diagram.....22-2
22.2.1 Link Mode.....22-2
22.3 Communication Setting.....22-4
22.3.1 Link Mode.....22-4
22.4 Available Device.....22-6

Chapter 23 Parker: Hi-Driver.....23-1~23-11

23.1Inverter List.....23-1
23.2 Wiring Diagram.....23-2
23.2.1 RS-485 Communication Mode.....23-2
23.2.2 RS-422 Communication Mode.....23-3
23.3 Communication Setting.....23-5
23.4 Available Device.....23-8
23.4.1 Basic Parameters.....23-8

23.4.2 Basic Commands 23-11

Chapter 24 Siemens: S7 200 PPI Direct .....24-1~24-7

24.1 PLC List.....24-1
24.2 Wiring Diagram.....24-2
24.2.1 RS-485 Communication.....24-2
24.3 Communication Setting.....24-3
24.3.1 Setting S7 200 PPI Direct.....25-3
24.4 Available Device 24-6

Chapter 25 Siemens: S7 300/400 MPI Driver .....25-1~25-9

25.1 PLC List.....25-1
25.2 Wiring Diagram.....25-2
25.2.1 RS-232C communication.....25-2
25.3 Communication Setting.....25-7
25.3.1 Setting S7 300/400 PC Adapter.....25-7
25.4 Available Device 25-8

Chapter 26 Siemens: S7 3964(R)/RK512 Driver .....26-1~26-11

26.1 PLC List.....26-1
26.2 Wiring Diagram.....26-2
26.2.1 RS-232C communication.....26-2
26.2.2 RS-422/485(4wire) Communication.....26-2
26.3 Communication Setting..... 26-10
26.3.1 Setting S7 300/400 3964(R)/RK512..... 26-10
26.4 Available Device 26-11

Chapter 27 MITSUBISHI: MELSEC-FX CPU Driver .....27-1~27-9

27.1 PLC List.....27-1
27.2 Wiring Diagram.....27-2
27.2.1 RS-232C communication method.....27-2
27.2.2 RS-422 (4wire) communication method 27-2
27.3 Communication Setting.....27-4
27.3.1 MITSUBISHI MELSEC-FX CPU configuration 27-4
27.4 Available Device 27-5
27.4.1 Devices available for FX CPU 27-5

Chapter 28 LS Mecapion .....28-1~28-3

28.1 List of devices available to connect 28-1
28.2 Wiring Diagram 28-1
28.2.1 Direct connection type 28-1
28.3 Communication Setting 28-2
28.3.1 Direct connection type 28-2
28.4 Available Device 28-3

Chapter 29 Modbus ASCII Master .....29-1~29-7

29.1 Modbus Protocol Overview 29-1
29.1.1 Frame structure 29-1
29.1.2 Data and address 29-2
29.2 Wiring Diagram 29-2
29.2.1 RS-232C 29-2
29.2.2 RS-422 29-3
29.2.3 RS-485 29-3
29.3 Communication Setting 29-4
29.3.1 Example of PLC(XGK) configuration 29-4
29.3.2 Example configuration of XGT Panel 29-6
29.4 Available Device 29-7

Chapter 30 Modbus ASCII slave .....30-1~30-9

30.1 Communication Setting 30-1
30.1.1 Example of PLC(XGK) configuration 30-1
30.1.2 XGT Panel configuration 30-3
30.2 Available Device 30-5
30.2.1 Device area 30-5
30.2.2 HS devices 30-5

Chapter 31 User-defined Protocol .....31-1~31-16

31.1 Communication Setting 31-1
31.1.1 Configuration of PLC 31-1
31.1.2 Configuration of XGT Panel 31-1
31.2 Available Device 31-3

31.2.1 Devices area 31-3
31.3 Usage of script 31-4
31.3.1 Script function – Communication script function 31-4
31.3.2 Transmit data when switch is pushed 31-7
31.3.3 Regular monitoring for devices 31-10
31.3.4 Read data received only from the controller 31-13

Chapter 32 DELTA DVP series .....32-1~32-5

32.1 PLC List 32-1
32.2 Wiring Diagram 32-2
32.2.1 RS-232C communication method 32-2
32.3 Communication Setting 32-3
32.3.1 DELTA DVP configuration 32-3
32.4 Transmit data when switch is pushed…….32-4
32.4.1 Devices available for DELTA DVP EH 32-5

Chapter 33 Fuji: MICREX-SX Series SIO .....33-1~33-7

33.1 PLC List 33-1
33.2 Wiring Diagram 33-2
33.2.1 RS-232C communication method 33-2
33.2.2 RS-422 communication method 33-4
33.3 Communication Setting……33-5
33.3.1 FUJI MICREX-SX Link configuration 33-5
33.4 Available devices 33-6
33.4.1 Transmit data when switch is pushed……..33-6

Chapter 34 AB: PLC DF-1 .....34-1~34-13

34.1 PLC List 34-1
34.2 Wiring Diagram 34-2
34.2.1 Control/CompactLogix Series RS-232C communication 34-2
34.2.2 MicroLogix Series RS-232C communication 34-3
34.3 Communication Setting 34-4
34.3.1 AB Control/CompactLogix and MicroLogix setting 34-4
34.4 Available Device 34-8
34.4.1 The devices available in the CompactLogix 34-8
34.4.2 The device available in the MicroLogix……...34-10
34.4.3 Control/CompactLogix device naming rule……34-12
34.4.4 MicroLogix device naming rule ……34-13

Chapter 35 HANYOUNG NUX: Temperature Controller .....35-1~35-6

35.1 PLC List.....35-1
35.2 Wiring Diagram.....35-2
35.2.1 RS-485 communication method.....35-2
35.2.2 RS-422 communication method.....35-4
35.3 Communication Setting.....35-5
35.4 Available devices.....35-4
32.4.1 Devices available for Fuji MICREX-SX.....35-6

Chapter 36 RS Automation: N/NX-CCU.....36-1~36-8

36.1 PLC List.....36-1
36.2 RS-232C connection.....36-3
36.3 Communication Setting.....36-5
36.3.1 Available devices.....36-5
36.3.2 XGT Panel configuration.....36-6
36.4 Available Devices.....36-8

Chapter 37 LSIS: XGT Servo.....37-1~37-5

37.1 Servo List.....37-1
37.2 Wiring Diagram.....37-2
37.2.1 RS-232C connection.....37-2
37.2.2 RS-485 connection.....37-2
37.3 Communication Setting.....37-3
37.3.1 Servo Configuration.....37-3
37.3.2 Servo Configuration.....37-3
37.4 Available devices.....37-5

Chapter 38 HIGEN: Servo.....38-1~38-6

38.1 Servo List.....38-1
38.2 Wiring Diagram.....38-2
38.2.1 RS-232C connection.....38-2
38.2.2 RS-485 connection.....38-3
38.3 Communication Setting.....38-4
38.3.1 Servo Configuration.....38-4
38.3.2 XGT Panel Configuration.....38-4
38.4 Available devices.....38-6

Chapter 39 KDT Systems: CIMON PLC LOADER .....39-1~39-5

39.1 PLC List.....39-1
39.2 RS-232C connection.....39-2
39.3 Communication Setting.....39-3
39.3.1 CIMON PLC LOADER configuration 39-3
39.4 Available Devices.....39-4
39.4.1 BP Series.....39-4
39.4.1 CP Series 39-4

Appendix 1 Warranty and Environmental Policy App1-1

Chapter 1 Introduction

1.1 Guide to Use This Manual

This manual includes system configuration, wiring diagram, available device and setting between controllers such as PLC, inverter and the XGT Panel.

It is divided into chapters as follows.

No.	Title	Contents
Chapter1	Introduction	Describes configuration of this manual, unit's features and terminology.
Chapter2	Communication Introduction and Configuration	Describes communication, port provided by XGT Panel.
Chapter3	LSIS: MASTER-K PLC	Describes communication connection with LSIS MASTER-K PLC.
Chapter4	LSIS: GLOFA-GM PLC	Describes communication connection with LSIS GLOFA-GM PLC.
Chapter5	LSIS: XGK PLC	Describes communication connection with LSIS XGK PLC.
Chapter6	LSIS: XGB PLC	Describes communication connection with LSIS XGB PLC.
Chapter7	LSIS: XGI PLC	Describes communication connection with LSIS XGI PLC.
Chapter8	MITSUBISHI MELSEC-Q PLC	Describes communication connection with MITSUBISHI MELSEC-Q PLC.
Chapter9	SYMBOL: Bar Code Scanner	Describes communication connection with SYMBOL's Bar Code Scanner.
Chapter10	LSIS: Inverter (MODBUS)	Describes communication connection with LSIS: Inverter (MODBUS)
Chapter11	LSIS: Inverter (LS BUS)	Describes communication connection with LSIS: Inverter (LS BUS)
Chapter12	Modbus RTU(Master)	Describes communication connection with Modbus RTU(Master)
Chapter13	Modbus TCP/IP(Master)	Describes communication connection with Modbus TCP/IP(Master)
Chapter14	MITSUBISHI MELSEC-A PLC	Describes communication connection with MITSUBISHI MELSEC-A PLC
Chapter15	OMRON CS/CJ PLC	Describes communication connection with OMRON CS/CJ PLC
Chapter16	OEMax Controls: Nx-CCU+	Describes communication connection with OEMax Controls: Nx-CCU+
Chapter17	AB EtherNet/IP	Describes communication connection with AB EtherNet/IP
Chapter18	Modbus RTU (Slave)	Describes communication connection with Modbus RTU (Slave)
Chapter19	Modbus TCP/IP (Slave)	Describes communication connection with Modbus TCP/IP (Slave)
Chapter20	YASKAWA MEMOBUS RTU (Master)	Describes communication connection with YASKAWA MEMOBUS RTU (Master)
Chapter21	KDT PLC	Describes communication connection with KDT PLC
Chapter22	MITSUBISHI: MELSEC-FX PLC	Describes communication connection with MITSUBISHI: MELSEC-FX PLC
Chapter23	Parker: Hi-Drive	Describes communication connection with Parker: Hi-Drive
Chapter24	Siemens: S7 200 PPI Direct	Describes communication connection with Siemens: S7 200 PPI Direct

No.	Title	Contents
Chapter25	Siemens: S7 MPI	Describes communication connection with Siemens: S7 MPI
Chapter26	Siemens: S7 3964(R)/RK512	Describes communication connection with Siemens: S7 3964(R)/RK512
Appendix1	Warranty and Environmental Policy	

NOTE

(1) This manual does not describe each item's using method, XP-Builder.
For their description, refer to related instruction manuals.
(2) Modification and addition can be made to this manual without prior notice.
(3) In case contents in the manual differ from actual usage, please check updated information or controller's instruction manual.

Chapter 2 Communication Introduction and Configuration

XGT Panel provides RS-232C, RS-422/485 and Ethernet communication. This chapter introduces each communication and describes the system configuration.

2.1 Communication Introduction

The basic communication method between the XGT Panel and controller is by requesting device information that's on the XGT Panel screen and the controller responding to that request.

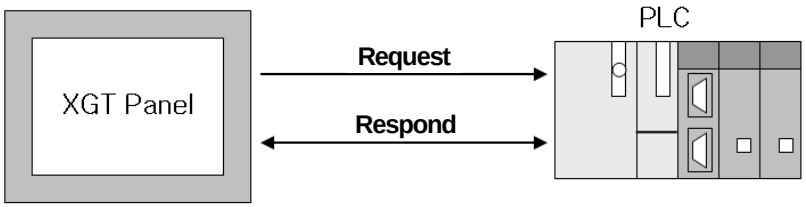

Communication uses protocol that the controller provides and it provides fast communication and picture switch.

2.2 Communication Connector Configuration

XGT Panel basically provides RS-232C, RS-422/485 and Ethernet communication. The figure below is the configuration of each communication connector and pin.

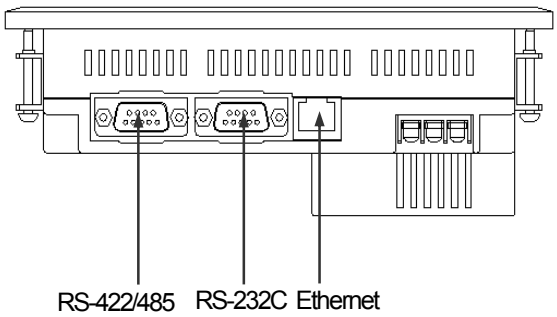

XP30-BTE

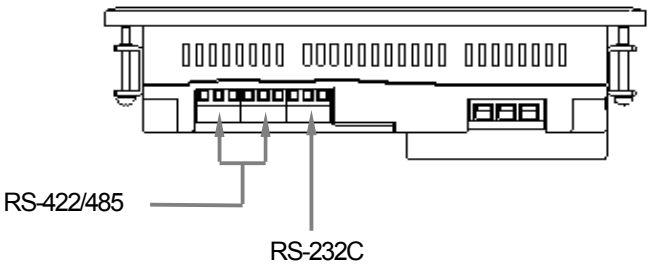

2.2.1 RS-232C connector configuration

RS-232C connector is configured as follows.

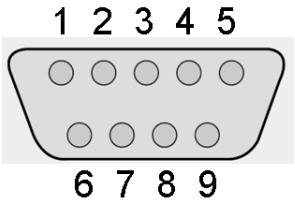

※ Connector type: D-SUB 9P, Male

Pin No.	Name	Function
1	N.C	No connection
2	RD	Receive data
3	SD	Send data
4	N.C	No connection
5	SG	Signal Ground
6	N.C	No connection
7	N.C	No connection
8	N.C	No connection
9	N.C	No connection

NOTE

(1) Notice
► XGT Panel does not provide flow control.

2.2.2 RS-422/485 connector configuration

RS-422/485 connector is configured as follows.

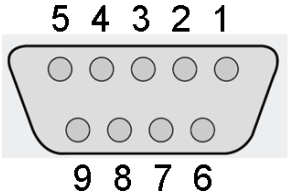

※ Connector type: D-Sub 9P, Female

Pin No.	Name	Function
1	N.C	No connection
2	N.C	No connection
3	SG	Signal Ground
4	TX+	Transmit+
5	TX-	Transmit-
6	SG	Signal Ground
7	N.C	No connection
8	RX+	Receive+
9	RX-	Receive-

2.2.3 XP30-BTE connector configuration

RS-232C, RS-422/485 is configured as follows

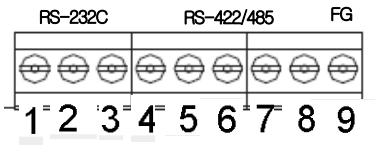

※ Connector type: terminal block type

Pin No.	Name	Function
1	TX	Transmission
2	RX	Reception
3	SG	Signal Ground
4	TX+	Transmission +
5	TX-	Transmission -
6	RX+	Reception +
7	RX-	Reception -
8	SG	Signal Ground
9	FG	Frame Ground

Note

(1) Notice
► Communication port of XP30-BTE is terminal block type. Pin no. 1~3 is for RS-232C and 4~9 is for RS-422/485.

2.2.4 Ethernet connector configuration

Ethernet connector is configured as follows.

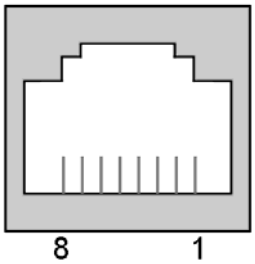

Pin No.	Name	Function
1	TX+	Transmit+
2	TX-	Transmit-
3	RX+	Receive+
4	N.C	No connection
5	N.C	No connection
6	RX-	Receive-
7	N.C	No connection
8	N.C	No connection

NOTE

(1) Notice
- ► Do not use N.C pin indiscreetly, for it is used at XGT Panel.
- ► XP30-BTE doesn't support Ethernet.

2.3 Communication Specification

2.3.1 RS-232C specification

XGT Panel meets the RS-232C standard specification (EIA-232-C).

Item	Contents	
Communication method	Half-duplex method	
Synchronous method	Asynchronous method	
Max transmission distance	Up to 15[m]	
Connection mode	1:1 connection method	
Transmission speed	9600, 19200, 38400, 57600, 115200 [bps]	
Data type	Data length	7, 8[bit]
	Parity Setting	None, Odd, Even
	Stop bit	1, 2[bit]
Channel setting	Up to 32 channels (0-31)	

NOTE

(1) Communication method
- ► Long distance communication available by connecting to the external modem, through public telephone lines.

RS-232C only gets connected 1:1 as below figure.

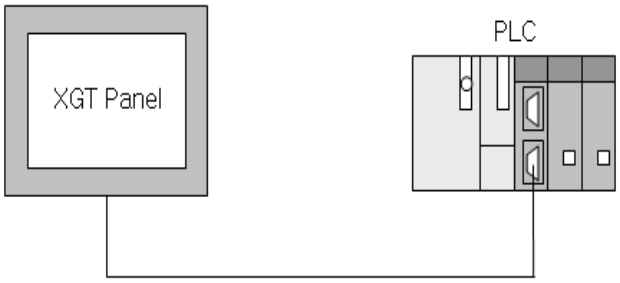

< 1:1 Configuration >

2.3.2 RS-422/485 specification

XGT Panel meets the RS-422/485 standard specification (EIA-422/485).

Item	Contents	
Communication method	Half-duplex method	
Synchronous method	Asynchronous method	
Max transmission distance	Up to 500[m]	
Connection mode	1:1, 1:N connection method	
Transmission speed	9600, 19200, 38400, 57600, 115200 [bps]	
Data type	Data length	7, 8[bit]
	Parity Setting	None, Odd, Even
	Stop bit	1, 2[bit]
Channel setting	Up to 32 channels (0-31)	

RS-422 communication method can be 1:1 or 1:N configured as below figure.

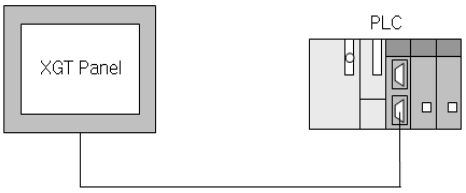

< 1:1 Configuration >

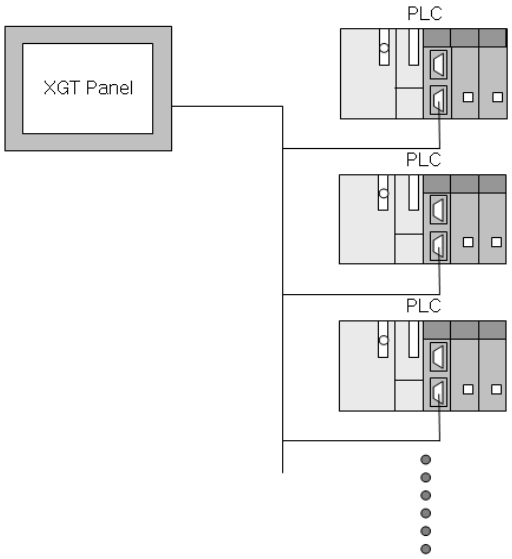

<1:N Configuration >

2.3.3 Ethernet specification

XGT Panel meets the Ethernet IEEE 802.3 standard specification.

Item	Contents
Transmission speed	10/100[Mbps]
Transmission method	Base band
Max extension length between nodes	100[m] (node-hub)
Max protocol size	1,500[Byte]
Token-passing access method	CSMA/CD

Ethernet can be connected in 2 ways as below figure.

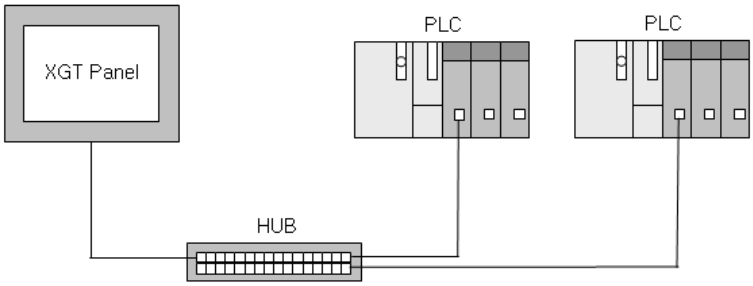

< Hub-node connection >

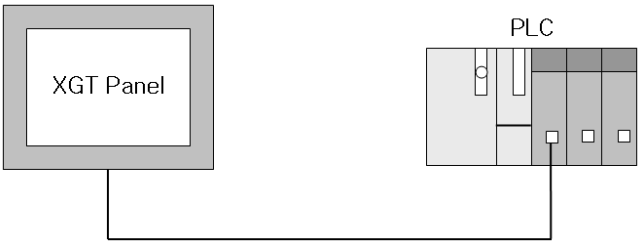

< 1:1 connection >

NOTE

(1) Ethernet connection method
► When connecting hub-node, direct cable has to be used and cross cable has to be used when connecting 1:1.

2.4 Communication Cable

It is advised to follow the below cable specifications for stable communication between the XGT Panel and controller.

2.4.1 RS-232C cable

Advised cable specification is as follows.

Item	Contents
Cable type	(UL) Style 2464
Specification	AWG24
Shield	advisory

2.4.2 RS-422/485 cable

Considering the communication distance and speed, it is advised to use RS-422 twisted pair cable.

Item	Contents
Cable type	(UL) Style 2464
Specification	AWG22
No. of core wire	pair
Shield	advisory

2.4.3 Ethernet cable

Advisory cable specification is as follows.

Item	Contents
Cable type	Select from UTP / FTP / STP
specification	Select from CAT.5 / Enhanced CAT.5 / CAT.6

2.5 Wiring Method

2.5.1 RS-232C cable

Wire the RS-232C cable as follows.

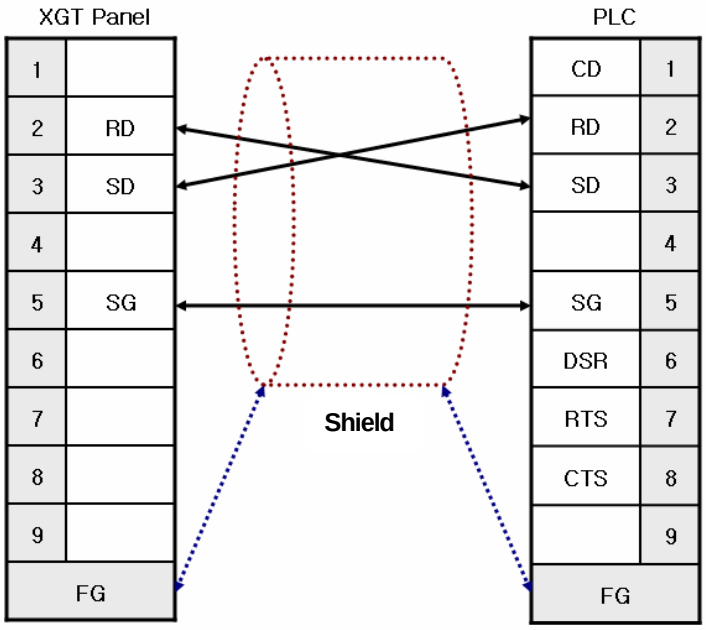

The above wiring diagram is a figure of common wiring and wiring diagrams may differ according to the controller. Refer to each chapter for specific information. Connect the FG of the shield cable to the controller or XGT Panel according to the installing environment.

NOTE

(1) Notice

- ► Please perform 3 class grounding to FG terminals of XGT Panel and controllers. Performance of communication cannot be guaranteed when connecting the FG terminal to the shield cable with poor grounding.
- ► Keep the length of cable within 15[m]. Performance of communication cannot be guaranteed with a longer cable than specified.
- ► Please use D-SUB 9P, Female for the connector.
- ► Please be careful not to get burned when soldering the connector and cable.

2.5.2 RS-422/485 cable

Wire the RS-422 cable as follows.

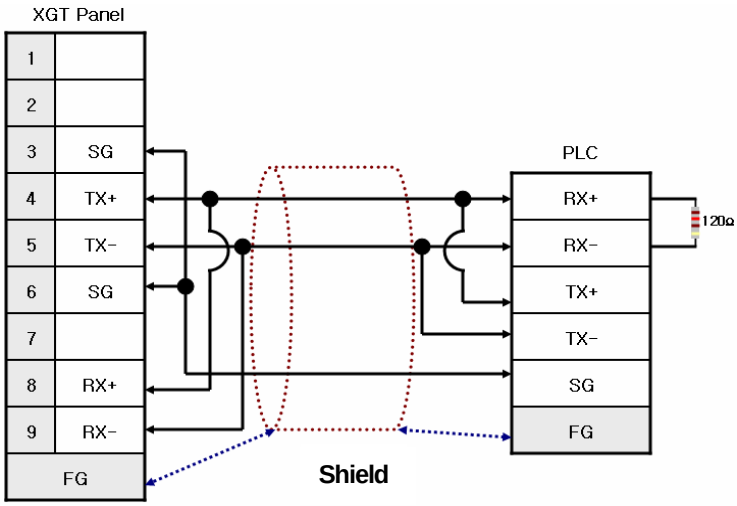

Please connect the FG of the shield cable to the controller or XGT Panel according to the installing environment.
Please insert a 120Ω resistor to both ends of the receiver (RX+, RX-) of the controller.
For the terminal setting of the XGT Panel, please use the setting switch as below figure.

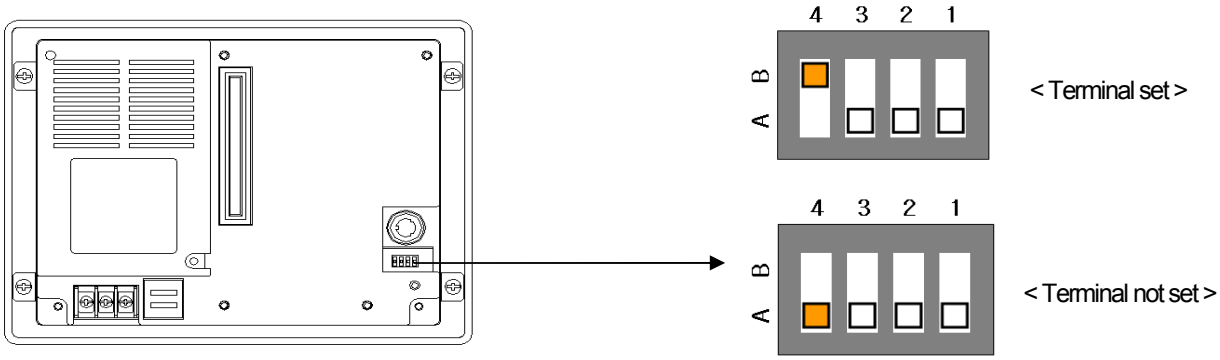

Rear Elevation

Wire the RS-485 cable as follows.

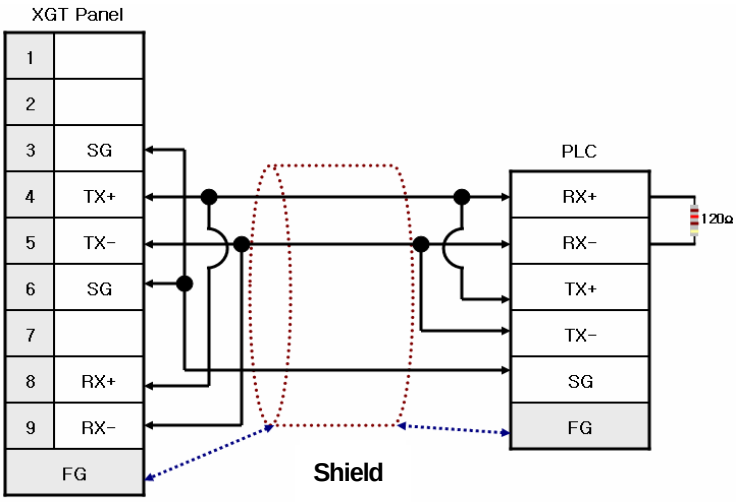

As the RS-422 wiring, please insert a 120Ω resistor to both ends of the receiver (RX+, RX-) of the controller.
For the terminal setting of the XGT Panel, please set with the setting switch as above.

NOTE

(1) Notice

- ► Please perform 3 class grounding to FG terminals of XGT Panel and controllers. Performance of communication cannot be guaranteed when connecting the FG terminal to the shield cable with poor grounding.
- ► Keep the length of cable within 500[m]. Performance of communication cannot be guaranteed with a longer cable than specified.
- ► Please use D-SUB 9P, Male for the connector.
- ► Please be careful not to get burned when soldering the connector and cable.
- ► Performance of communication cannot be guaranteed, if terminal is not set.

RS-422/485 supports 1:N communication. When connecting, wire as follows.

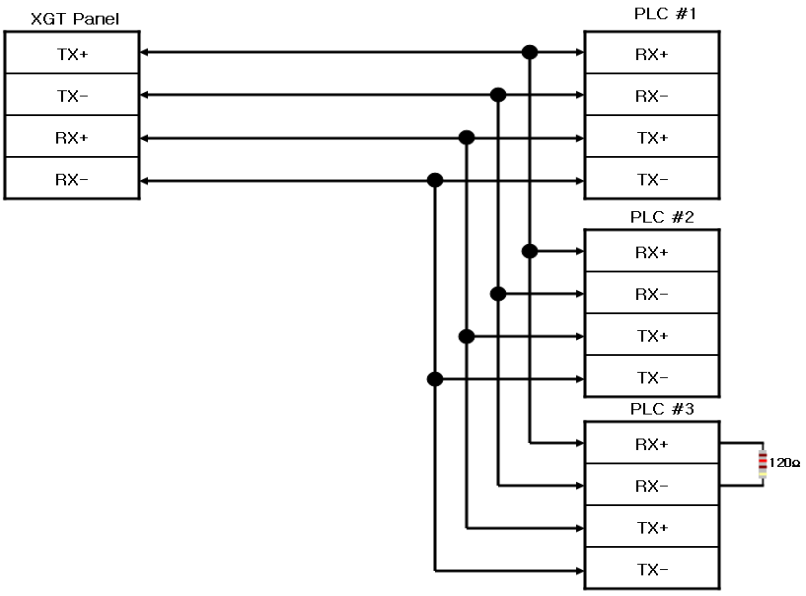

Please insert the terminal resistor in the last connected controller.

2.5.3 Ethernet cable

Ethernet cable gets specified into 2 cables according to its type.
When communicating through LAN, connected to network equipment like a hub, direct cable is used. (in case of hub-node connection)
Direct connection is available among equipments and in this case, cross cable is used.

Method for wiring a direct cable is as follows.

1	White-oragne	↔	White-oragne	1
2	Orange	↔	Orange	2
3	White-green	↔	White-green	3
4	Blue	↔	Blue	4
5	White-blue	↔	White-blue	5
6	Green	↔	Green	6
7	White-brown	↔	White-brown	7
8	Brown	↔	Brown	8

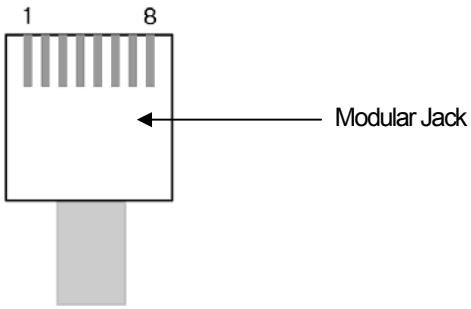

'White-yellow', 'White-green', 'White-blue', 'White-brown' from above figure is indicated on the coating of the cable.
For example, 'white-blue' has blue stripes on white coating.

Method for wiring of cross cable is as follows.

1	White-orange	↔	White-green	1
2	Orange	↔	Green	2
3	White-green	↔	White-orange	3
4	Blue	↔	Blue	4
5	White-blue	↔	White-blue	5
6	Green	↔	Orange	6
7	White-brown	↔	White-brown	7
8	Brown	↔	Brown	8

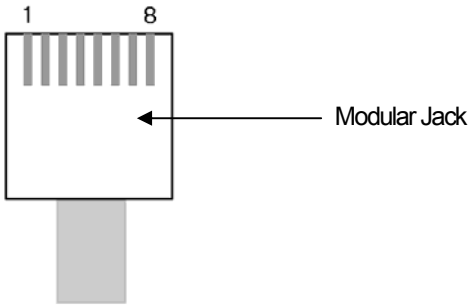

NOTE

(1) Notice
- ► Use according to the connection method.
- ► Wire the cable by using a modular tool. Bad connection may occur.
- ► If the lock part of the modular jack gets damaged, it may not get fixed to the RJ45 connector (Ethernet connector) and bad connection may occur.
- ► The UTP cable is made out of solid wire material. Therefore, it may break when heavily bent or shaken.
- ► It is advisory to use a plug cover when wiring cables.

Chapter 3 LSIS: MASTER-K PLC

3.1 PLC List

XGT Panel is available to connect to MASTER-K PLC as follows.

PLC	CPU module	Connection method	Comm. method	Connection module	Remarks
MASTER-K	1000S	CPU module direct connection method	RS-232C	CPU module	-
		Link	RS-232C	G3L-CUEA	Cnet
		Link	RS-422/485	G3L-CUEA	Cnet
		Link	Ethernet	G3L-EUTB	Open type FEnet
	300S	CPU module direct connection method	RS-232C	CPU module	-
		Link	RS-232C	G4L-CUEA	Cnet
		Link	RS-422/485	G4L-CUEA	Cnet
		Link	Ethernet	G4L-EUTB	Open type FEnet
	200S	CPU module direct connection method	RS-232C	CPU module	-
		Link	RS-232C	CPU module	Built-in Cnet
		Link	RS-232C	G6L-CUEB	Cnet
		Link	RS-422/485	G6L-CUEC	Cnet
		Link	Ethernet	G6L-EUTB	Open type FEnet
	120S	CPU module direct connection method	RS-232C	CPU module	-
		Link	RS-232C	CPU module	Built-in Cnet
		Link	RS-485	CPU module	Built-in Cnet
		Link	RS-232C	G7L-CUEB	Cnet
		Link	RS-422/485	G7L-CUEC	Cnet
	80S	CPU module direct connection method	RS-232C	CPU module	-
		Link	RS-232C	CPU module	Built-in Cnet
		Link	RS-485	CPU module	Built-in Cnet
		Link	RS-232C	G7L-CUEB	Cnet
		Link	RS-422/485	G7L-CUEC	Cnet

NOTE

(1) PLC
- ► K10S1 not supported.
- ► Ethernet (GxL-EUTC, ERTC) module not supported.

(2) Terminology
- ► CPU module direct connection: executes serial communication through the loader port of the CPU module.
- ► Link: executing serial communication with the communication module of the PLC.

3.2 Wiring Diagram

3.2.1 CPU module direct connection method

Connecting XGT Panel and MASTER-K PLC with CPU module direct connection method (RS-232C) is as follows.

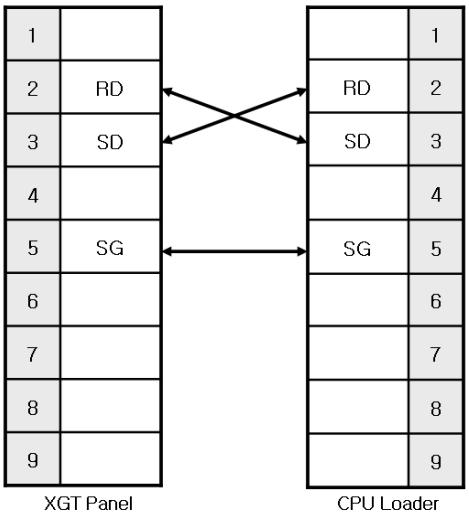

NOTE

(1) Cautions when wiring cable
- ► In the CPU module loader port is a CPU module that provides built-in Cnet. Be careful not to connect to other pins when wiring.
- ► CPU module loader port is D-SUB 9P, Female. Use a Male connector when wiring the cable.

3.2.2 Link method: Built-in Cnet

Among the MASTER-K PLC series, K80S, K120S, K200S (RS-232C only) provide built-in Cnet.
Below is the wiring of RS-232C built-in Cnet.

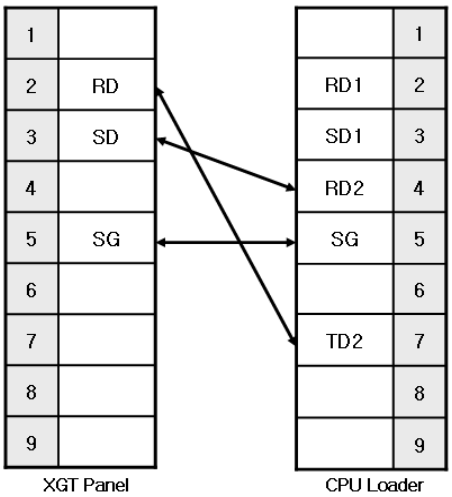

NOTE

(1) Notice
- ► In the CPU module loader port is a CPU module that provides built-in Cnet. Be careful not to connect to other pins when wiring.
- ► CPU module loader port is D-SUB 9P, Female. Use a Male connector when wiring the cable.
- ► Refer to chapter 2 for shield wiring.

Below is the wiring diagram of built-in RS-485 Cnet. (K80S, K120S only)

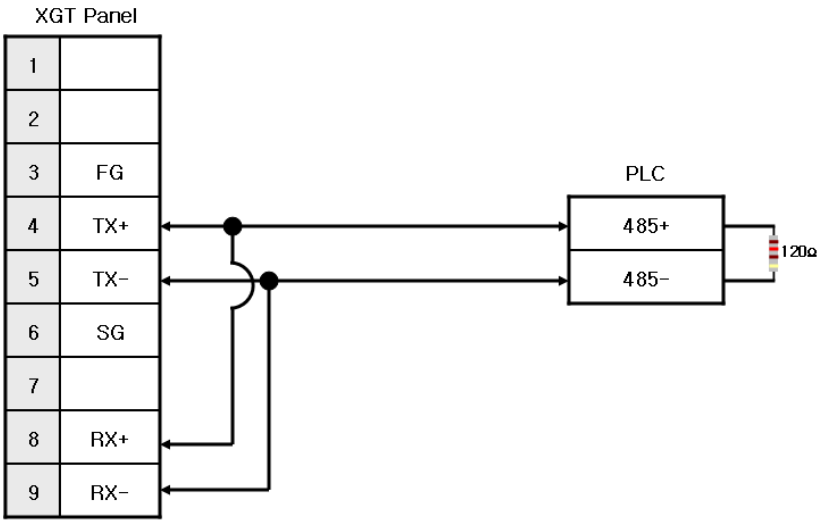

NOTE

(1) Notice
- ► Set terminal switch of the XGT Panel.
- ► RS-485 port of the PLC does not need an extra connector since it's consisted as a terminal block.
- ► Refer to chapter 2 for shield wiring.

3.2.3 Link method: Cnet

Cnet is specified into RS-232C and RS-422/485 type.
Below is the wiring of RS-232C Cnet.

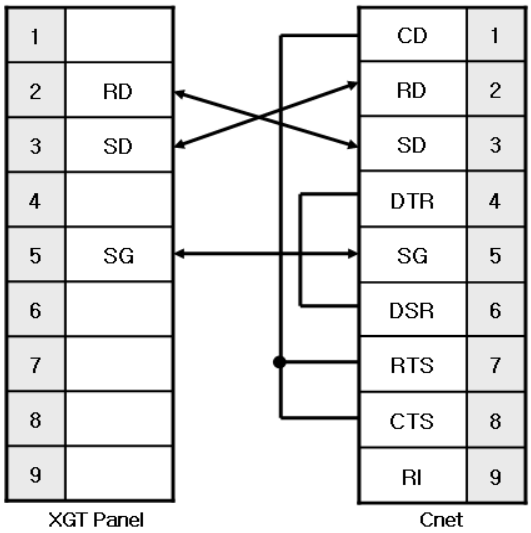

NOTE

(1) Notice
- ► Since MASTER-K Cnet (RS-232C) uses flow control, it will not communicate if it is not wired as above.
- ► Refer to chapter 2 for shield wiring.

RS-422 wiring is as below.

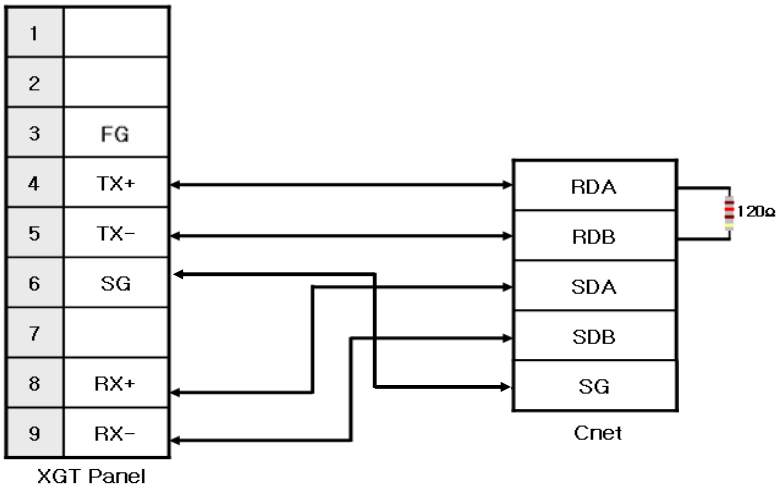

RS-485 wiring is as below.

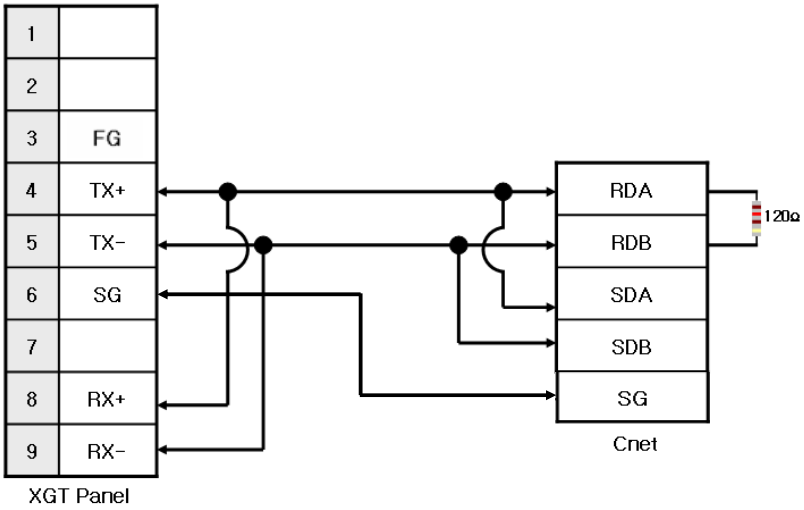

NOTE

(1) Notice
- ► Set terminal switch of the XGT Panel.
- ► RS-422/485 port of the PLC does not need an extra connector since it's consisted as a terminal block.
- ► Refer to chapter 2 for shield wiring.

3.2.4 Link method: FEnet

When connecting MASTER-K and Ethernet, the wiring differs according to its configuration. Refer to chapter 2 for configuration and wiring method.

3.3 Communication Setting

3.3.1 CPU module direct connection method

Communication parameter of the XGT Panel gets set through XP-Builder. (Refer to XP-Builder instruction manual)
XP-Builder provides communication parameter for the CPU module loader as basics.

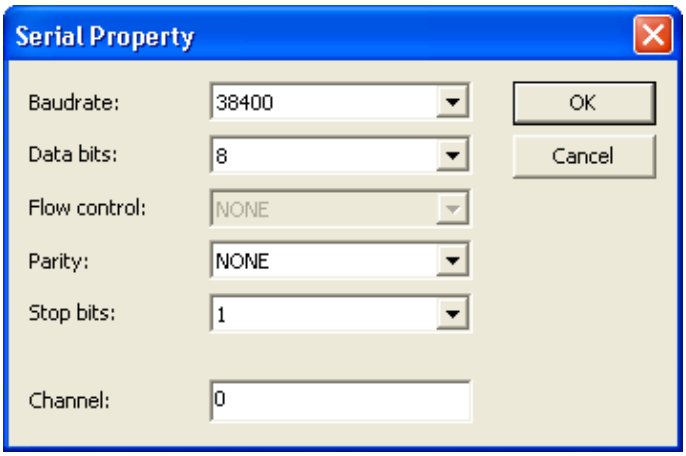

NOTE

(1) Communication state check
► When it is unable to check the communication state with the MASTER-K CPU module, check it by using the XGT Panel Diagnostics and PLC Information function. (Refer to XGT Panel instruction manual)

(2) Cautions when setting XP-Builder
► When creating project and setting communication, set as below.

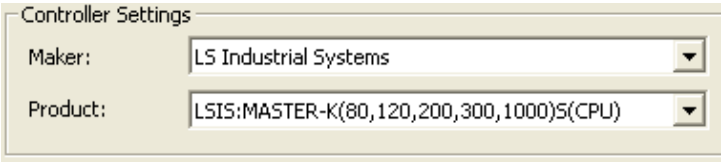

3.3.2 Link method: Built-in Cnet

To use built-in Cnet (RS-232C, RS-422/485), set the 'BUILT_IN_CNET' switch to 'ON' from K80S/K120S. (except K200S)

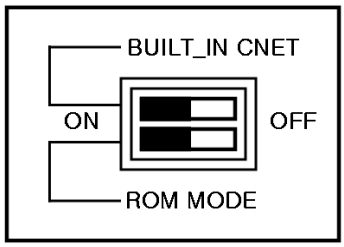

Set PLC's built-in Cnet (RS-232C) communication parameter from KGL-WIN. (Refer to KGL-WIN instruction manual)

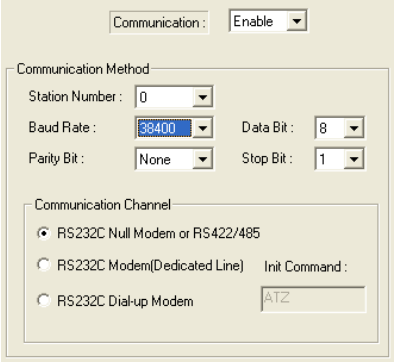

K80S/K120S parameter setting

K200S parameter setting

From the XGT Panel's communication parameter, set Baudrate, Data bits, Parity, Stop bit s and Channel as below.

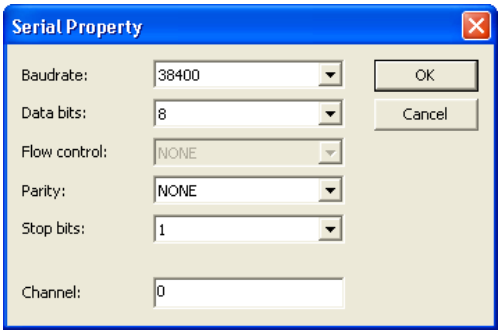

NOTE

(1) Communication state check

► It will not communicate when MASTER-K PLC's communication parameter and XGT Panel communication parameter differ.

(2) Cautions when setting XP-Builder

► When creating project and setting communication, set as below.

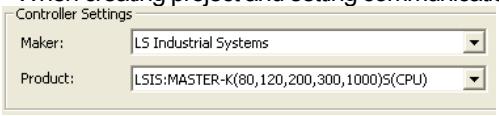

► Set connection property as below.

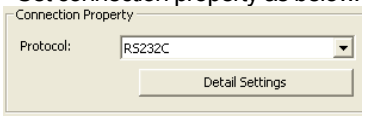

Set parameter (RS-485) at KGL-WIN as below.

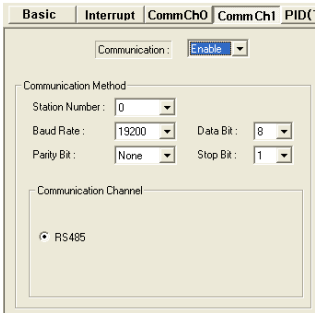

K120S parameter setting

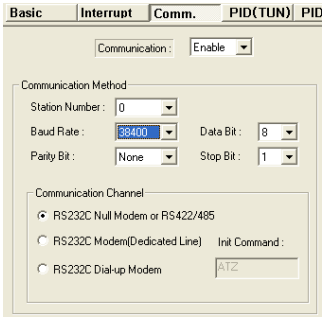

K80S parameter setting

NOTE

(1) Communication state check

► It will not communicate when MASTER-K PLC's communication parameter and XGT Panel communication parameter differ.

(2) Cautions when setting XP-Builder

► When creating project and setting communication, set as below.

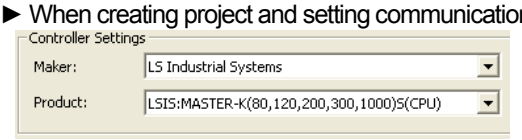

► Set Connection Property as below.

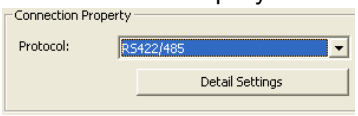

► When configuring 1:N, set Elapse time.

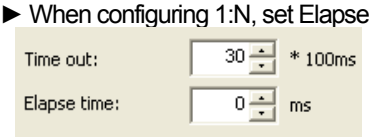

3.3.3 Link method: Cnet

Set Cnet communication parameter of the PLC (except K80S/K120S) through frame editor. (Refer to Cnet I/F Module instruction manual) Set Cnet as below.

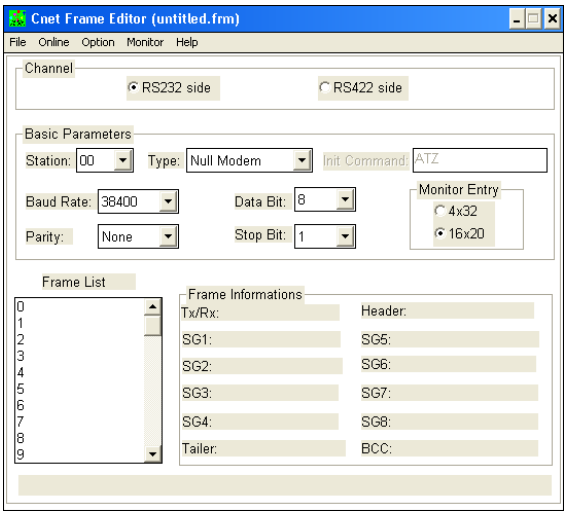

Set communication channel to 'RS232 side' and set communication parameter. When setting RS-422/485, set 'RS422 side'. Be sure to select '16 x 20' for monitor registration size.

In order to set parameter value to the PLC, select slot number in which the Cnet module is installed as below.

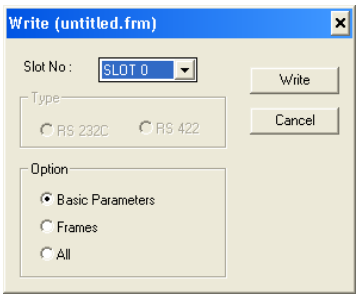

When write is done, start operation as below.

Set XGT Panel's communication parameter as shown in 3.3.2.

Be sure to set operation mode from the Cnet module.
Because operation mode setting differs according to each Cnet, refer to Cnet I/F Module instruction manual.

NOTE

(1) Communication state check
- ► Frame editor has a monitoring function. Communication data may be checked using this function.
- ► There are RX, TX LEDs on the Cnet module. These LEDs blink rapidly when communicating normally.

(2) Cautions when setting PLC
- ► Be sure to reset the PLC after setting the communication parameter of the frame editor. (Refer to instruction manual for specific details)
- ► This manual only explains briefly. Be sure to refer to the Cnet I/F Module instruction manual when setting.

(3) Cautions when setting XP-Builder
- ► When configuring RS-422/485 1:N, set transmission stand-by time.

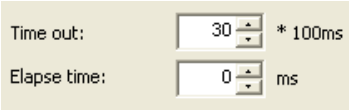

To use Cnet to K80S/K120S, set the 'BUILT_IN CNET' switch to 'OFF" as below.

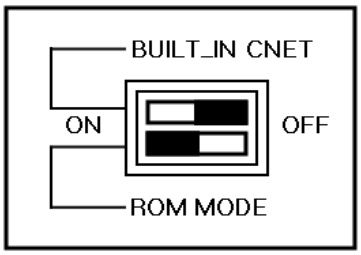

Set communication parameter from KGL-WIN.

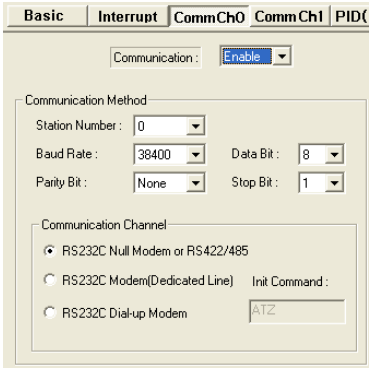

K80S/K120S parameter setting

NOTE

(1) Cautions when setting PLC
► This manual only explains briefly. Be sure to refer to the KGL-WIN instruction manual when setting.
(2) Cautions when setting XP-Builder
► When configuring RS-422/485 1:N, set transmission stand-by time.

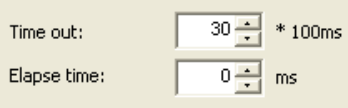

3.3.4 Link method: FEnet

XGT Panel only supports open type FEnet. (Exclusive FEnet module not supported)
Set FEnet communication parameter from high-speed Ethernet frame editor. (Refer to FEnet I/F Module instruction manual)
After running the software, select 'FENET' as below.

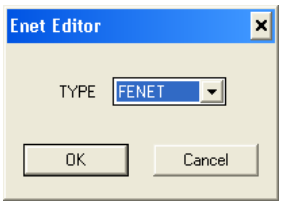

Set communication parameter such as IP address and gateway.

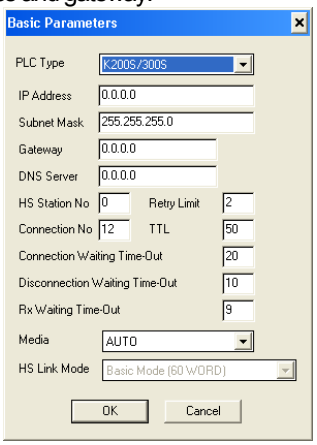

In order to set parameter value to the PLC, select slot number in which the Cnet module is installed as below.

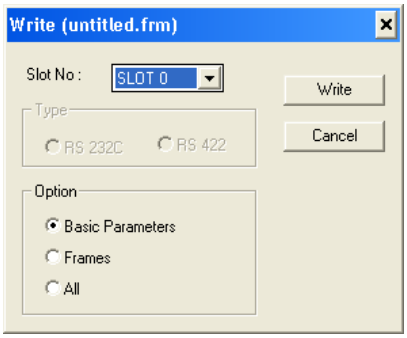

When write is done and PLC is reset, setting is done.

XGT Panel's communication parameter is as below. Select target IP and protocol type.

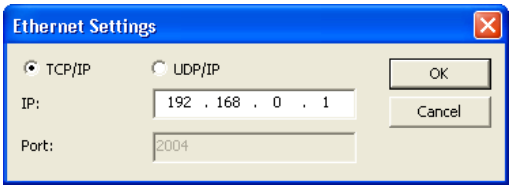

NOTE

(1) Communication state check
► There are RX, TX LEDs on the Cnet module. These LEDs blink rapidly when communicating normally.
(2) Cautions when setting XP-Builder
► When creating project and setting communication, set as below.

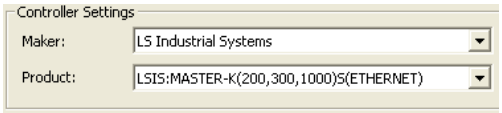

3.4 Available Device

Available devices of the XGT Panel are as follows.

Device Type	Size	Bit Contact point	Word Data	Remarks
P	1024 point	P0000 ~ P063F	P000 ~ P063	
M	3072 point	M0000 ~ M191F	M000 ~ M191	
L	1024 point	L0000 ~ L063F	L000 ~ L063	
K	512 point	K0000 ~ K031F	K000 ~ K031	
F	512 point	F0000 ~ F031F	F000 ~ F031	
T	256 point	T000 ~ T255	T000 ~ T255	
C	256 point	C000 ~ C255	C000 ~ C255	
S	100*100	S00.00 ~ S99.99	WORD N/A	
D	10000 word	Contact point N/A	D0000 ~ D9999	

NOTE

(1) Notice
► For instructions on using devices and specific information, please refer to the XP-Builder instruction manual.
► Please make sure to use the device within the range.
► Device range may differ according to the CPU module. Refer to each CPU module's instruction manual.

Chapter 4 LSIS: GLOFA-GM PLC

4.1 PLC List

XGT Panel is able to connect to GLOFA-GM PLC.

PLC	CPU module	Connection method	Comm. method	Connection Module	Remarks
GLOFA-GM	GMR/GM1/2/3	CPU module direct connection method	RS-232C	CPU module	-
		Link	RS-232C	G3L-CUEA	Cnet
		Link	RS-422/485	G3L-CUEA	Cnet
		Link	Ethernet	G3L-EUTB	Open type FEnet
	GM4	CPU module direct connection method	RS-232C	CPU module	-
		Link	RS-232C	G4L-CUEA	Cnet
		Link	RS-422/485	G4L-CUEA	Cnet
		Link	Ethernet	G4L-EUTB	Open type FEnet
	GM6	CPU module direct connection method	RS-232C	CPU module	-
		Link	RS-232C	CPU module	Built-in Cnet
		Link	RS-232C	G6L-CUEB	Cnet
		Link	RS-422/485	G6L-CUEC	Cnet
		Link	Ethernet	G6L-EUTB	Open type FEnet
	GM7U	CPU module direct connection method	RS-232C	CPU module	-
		Link	RS-232C	CPU module	Built-in Cnet
		Link	RS-485	CPU module	Built-in Cnet
		Link	RS-232C	G7L-CUEB	Cnet
		Link	RS-422/485	G7L-CUEC	Cnet
	GM7	CPU module direct connection method	RS-232C	CPU module	-
		Link	RS-232C	CPU module	Built-in Cnet
		Link	RS-485	CPU module	Built-in Cnet
		Link	RS-232C	G7L-CUEB	Cnet
		Link	RS-422/485	G7L-CUEC	Cnet

NOTE

(1) Notice

► Dedicated Ethernet module (GxL-EUTC, ERTC) is not supported.

(2) Terminology

► CPU module direct connection: executes serial communication through the loader port of the CPU module.

► Link: executing serial communication with the communication module of the PLC.

4.2 Wiring Diagram

4.2.1 CPU module direct connection method

Connecting XGT Panel and GLOFA-GM PLC with CPU module direct connection method (RS-232C) is as follows.

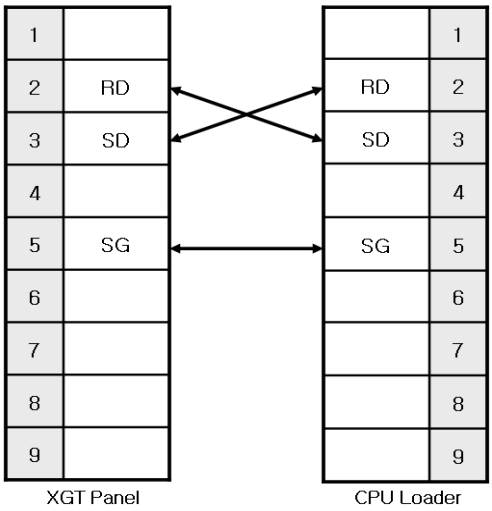

NOTE

(1) Cautions when wiring cable

► In the CPU module loader port is a CPU module that provides built-in Cnet. Be careful not to connect to other pins when wiring.

► CPU module loader port is D-SUB 9P, Female. Use a Male connector when wiring the cable.

4.2.2 Link method: Built-in Cnet

Among the GLOFA-GM PLC series, GM7, GM7U, and GM6 (only RS-232C) provide built-in Cnet.
Below is the wiring of RS-232C built-in Cnet.

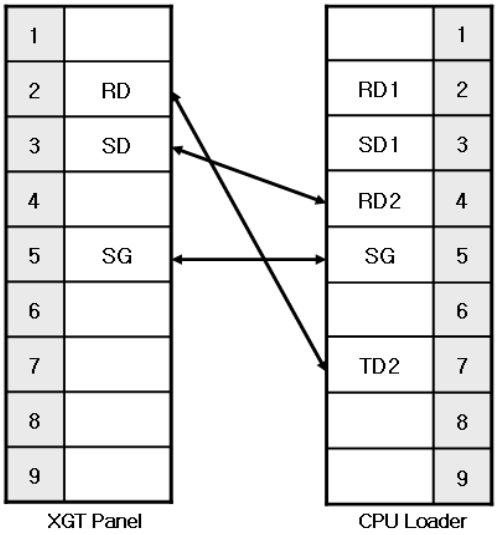

NOTE

(1) Notice

► In the CPU module loader port is a CPU module that provides built-in Cnet. Be careful not to connect to other pins when wiring.

► CPU module loader port is D-SUB 9P, Female. Use a Male connector when wiring the cable.

► Refer to chapter 2 for shield wiring.

Below is the wiring diagram of built-in RS-485 Cnet. (GM7, GM7U only)

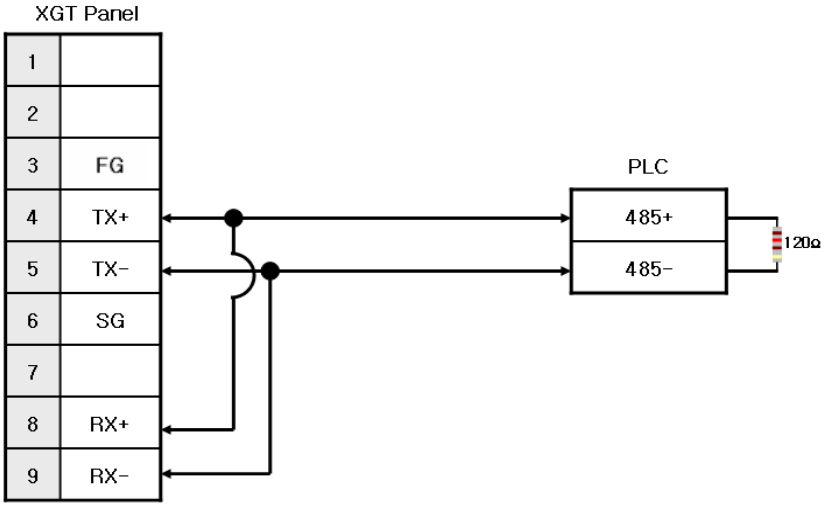

NOTE

(1) Notice

► Set terminal switch of the XGT Panel.

► RS-485 port of the PLC does not need an extra connector since it's consisted as a terminal block.

► Refer to chapter 2 for shield wiring.

4.2.3 Link method: Cnet

Cnet is specified into RS-232C and RS-422/485 type.
Below is the wiring of RS-232C Cnet.

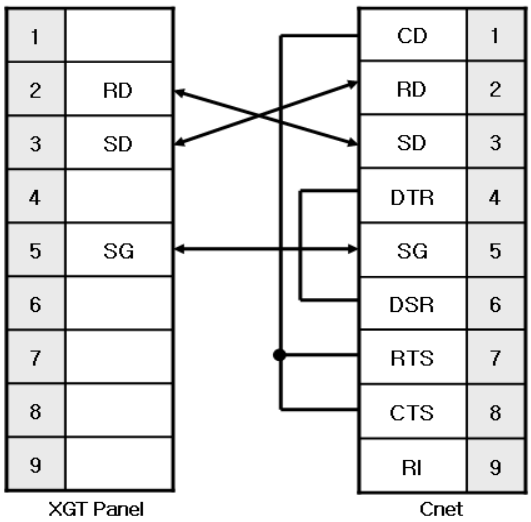

NOTE

(1) Notice
► Since GLOFA-GM Cnet(RS-232C) uses flow control, it will not communicate if it is not wired as above.
► Refer to chapter 2 for shield wiring.

RS-422 wiring is as below.

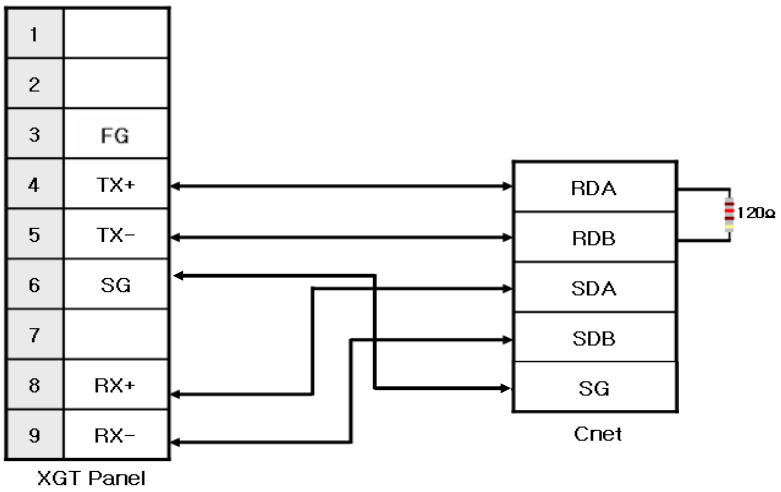

RS-485 wiring is as below.

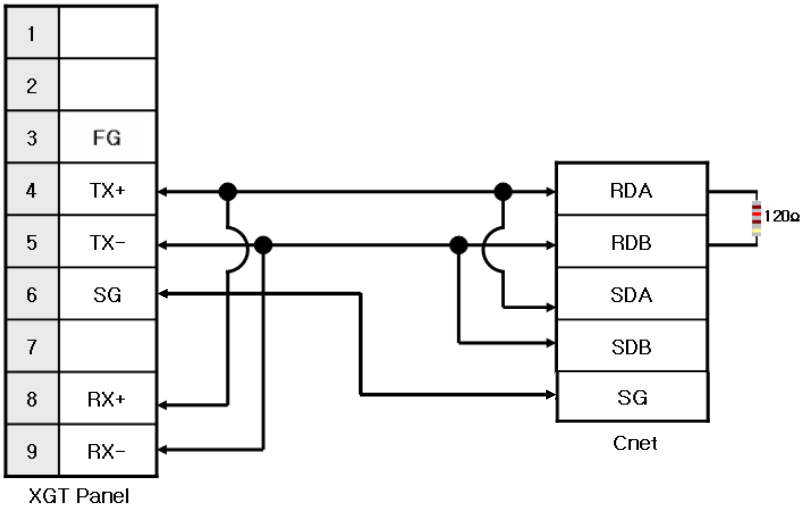

NOTE

(1) Notice
► Set terminal switch of the XGT Panel.
► RS-422/485 port of the PLC does not need an extra connector since it's consisted as a terminal block.
► Refer to chapter 2 for shield wiring.

4.2.4 Link method: FEnet

When connecting GLOFA-GM and Ethernet, the wiring differs according to its configuration. Refer to chapter 2 for configuration and wiring method.

4.3 Communication Setting

4.3.1 CPU module direct connection method

Communication parameter of the XGT Panel gets set through XP-Builder. (Refer to XP-Builder instruction manual)
XP-Builder provides communication parameter for the CPU module loader as basics.

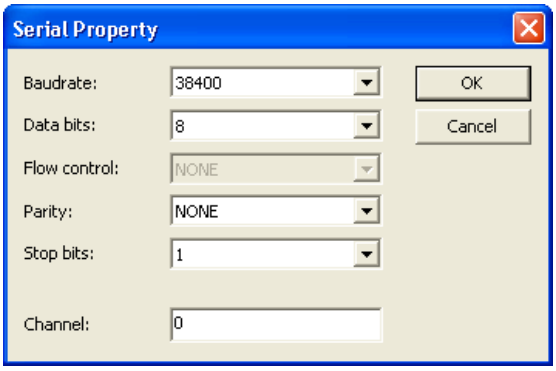

NOTE

(1) Communication state check

► When it is unable to check the communication state with the GLOFA-GM CPU module, check it by using the XGT Panel Diagnostics and PLC Information function. (Refer to XGT Panel instruction manual)

(2) Cautions when setting XP-Builder

► When creating project and setting communication, set as below.

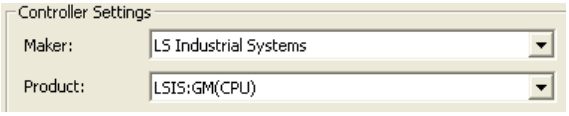

4.3.2 Link method: Built-in Cnet

To use built-in Cnet(RS-232C, RS-422/485), set the 'BUILT_IN_CNET' switch to 'ON' from GM7/GM7U. (except GM6)

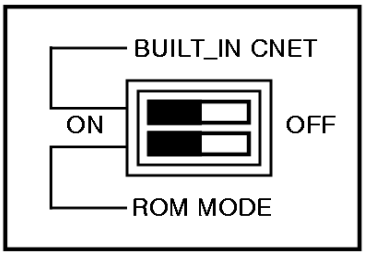

Set PLC's built-in Cnet (RS-232C) communication parameter from GMWIN. (Refer to GMWIN instruction manual)

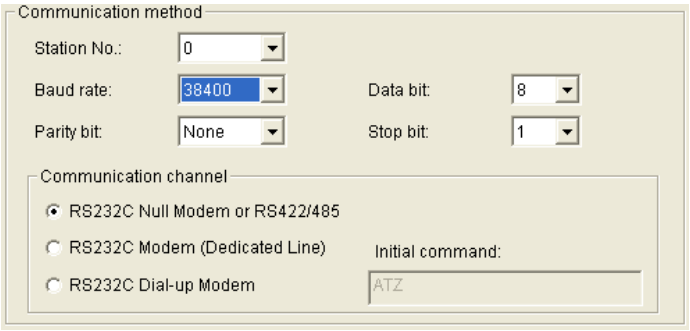

GM7/GM7U parameter setting

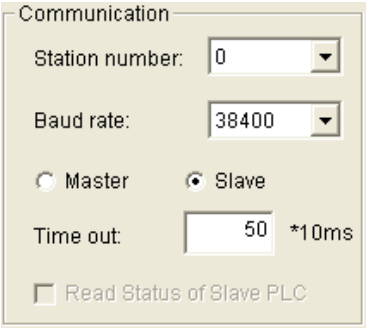

GM6 parameter setting

From the XGT Panel's communication parameter, set transmitting speed, data bit, parity, stop bit and channel as below.

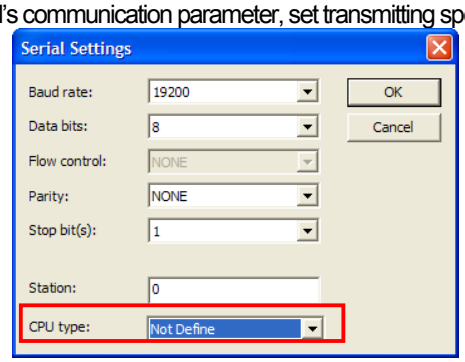

CPU type setting function (GMR/GM7/GM7U)

NOTE

(1) Communication state check

► It will not communicate when GLOFA-GM PLC's communication parameter and XGT Panel communication parameter differ.

(2) Cautions when setting XP-Builder

► When creating project and setting communication, set as below.

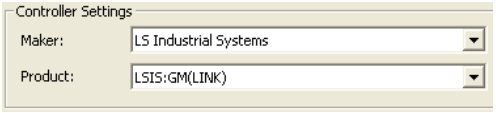

► Set connection property as below.

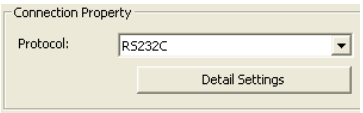

Set parameter (RS-485) at GMWIN as below.

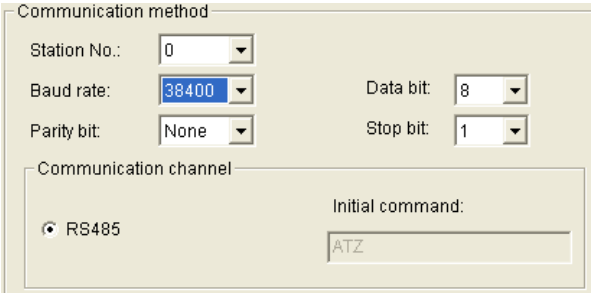

GM7U parameter setting

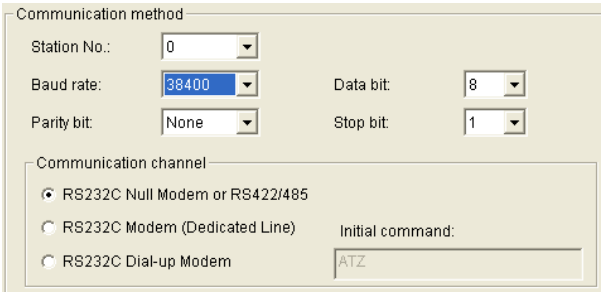

GM7 parameter setting

NOTE

(1) Communication state check

► It will not communicate when GLOFA-GM PLC's communication parameter and XGT Panel communication parameter differ.

(2) Cautions when setting XP-Builder

► When creating project and setting communication, set as below.

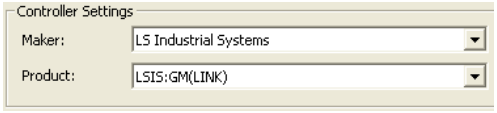

► Set connection property as below.

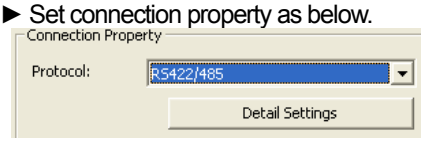

► When configuring 1:N, set transmission stand-by time.

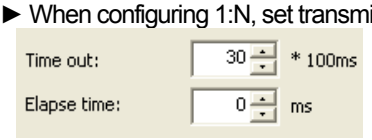

4.3.3 Link method: Cnet

Set Cnet communication parameter of the PLC(except GM7/GM7U) through frame editor. (Refer to Cnet I/F Module instruction manual) Set Cnet as below.

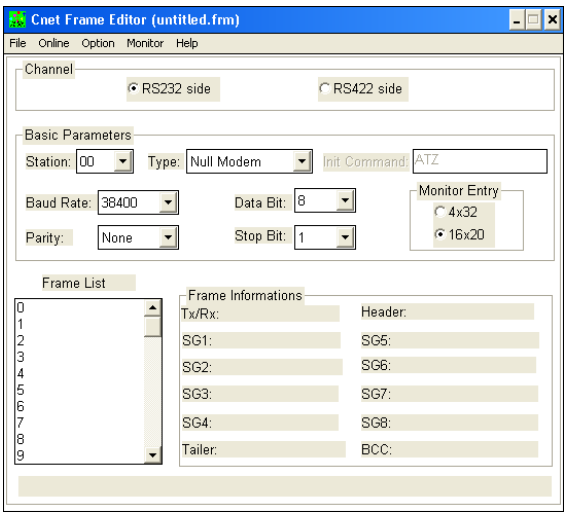

Set communication channel to 'RS232 side' and set communication parameter. When setting RS-422/485, set 'RS422 side'. Be sure to select '16 x 20' for monitor registration size.

In order to set parameter value to the PLC, select slot number in which the Cnet module is installed as below.

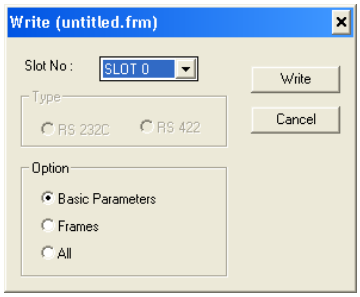

When write is done, start operation as below.

Set XGT Panel's communication parameter as shown in 4.3.2.

Be sure to set operation mode from the Cnet module.
Because operation mode setting differs according to each Cnet, refer to Cnet I/F Module instruction manual.

NOTE

(1) Communication state check
- ► Frame editor has a monitoring function. Communication data may be checked using this function.
- ► There are RX, TX LEDs on the Cnet module. These LEDs blink rapidly when communicating normally.

(2) Cautions when setting PLC
- ► Be sure to reset the PLC after setting the communication parameter of the frame editor. (Refer to instruction manual for specific details)
- ► This manual only explains briefly. Be sure to refer to the Cnet I/F Module instruction manual when setting.

(3) Cautions when setting XP-Builder
- ► When configuring RS-422/485 1:N, set transmission stand-by time.

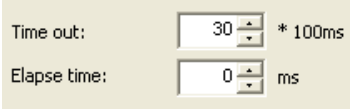

To use built-in Cnet, set the 'BUILT_IN_CNET' switch to 'ON' from GM7/GM7U.

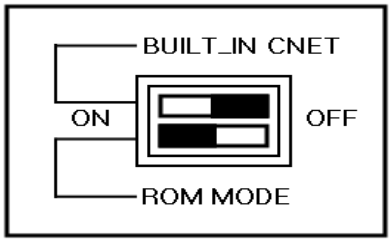

Set communication parameter from GMWIN.

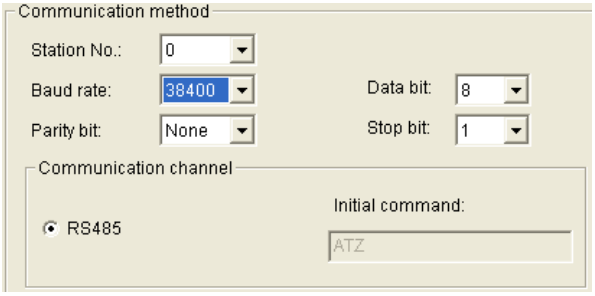

K80S/K120S parameter setting

NOTE

(1) Cautions when setting PLC
► This manual only explains briefly. Be sure to refer to the GMWIN instruction manual when setting.
(2) Cautions when setting XP-Builder
► When configuring RS-422/485 1:N, set transmission stand-by time.

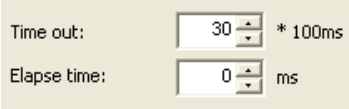

4.3.4 Link method: FEnet

XGT Panel only supports open type FEnet. (Exclusive FEnet module not supported)
Set FEnet communication parameter from high-speed Ethernet frame editor. (Refer to FEnet I/F Module instruction manual)
After running the software, select 'FENET' as below.

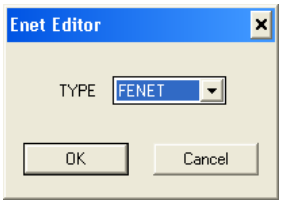

Set communication parameter such as IP address and gateway.

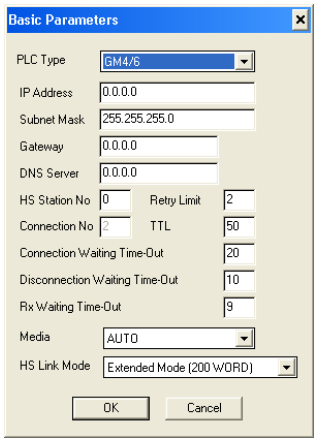

In order to set parameter value to the PLC, select slot number in which the Cnet module is installed as below.

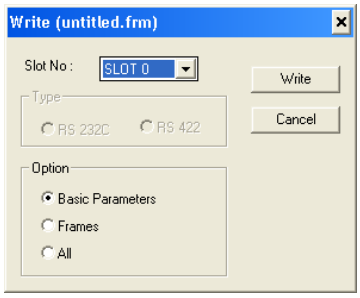

When write is done and PLC is reset, setting is done.

XGT Panel's communication parameter is as below. Select target IP and protocol type.

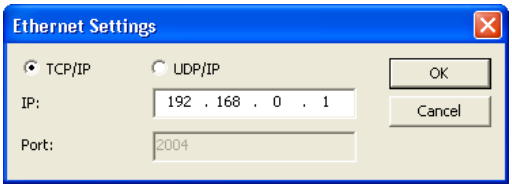

NOTE

(1) Communication state check

► There are RX, TX LEDs on the Cnet module. These LEDs blink rapidly when communicating normally.

(2) Cautions when setting XP-Builder

► When creating project and setting communication, set as below.

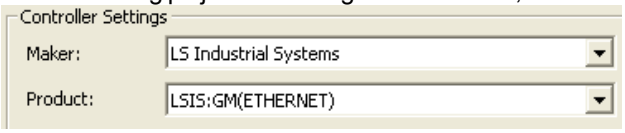

4.4 Available Device

Available devices of the XGT Panel are as follows.

Device Type	Size	Bit Contact point	Word Data	Remarks
%IX	32768 point	%IX0.0.0 ~ %IX63.7.63	WORD N/A	
%QX	32768 point	%QX0.0.0 ~ %QX63.7.63	WORD N/A	
%MX	959984 point	%MX00000 ~ %MX95983	WORD N/A	
%IW	2047 word	Contact point N/A	%IW0.0.0 ~ %IW63.7.3	
%QW	2047 word	Contact point N/A	%QW0.0.0 ~ %QW63.7.3	
%MW	59999 word	%MW00000.0 ~ %MW59999.15	%MW0000 ~ %MW59999	

NOTE

(1) Notice

► For instructions on using devices and specific information, please refer to the XP-Builder instruction manual.

► Please make sure to use the device within the range.

► Device range may differ according to the CPU module. Refer to each CPU module's instruction manual.

Chapter 5 LSIS: XGK PLC

5.1 PLC List

XGT Panel is able to connect to XGK PLC.

PLC	CPU module	Connection method	Comm. method	Connection Module	Remarks
XGK	CPUH / CPUA / CPUS /CPUE	CPU direct connection	RS-232C	CPU Module	-
		Link	RS-232C	XGL-C22A XGL-CH2A	Cnet
		Link	RS-422/485	XGL-C42A XGL-CH2A	Cnet
		Link	Ethernet	XGL-EFMT	-

NOTE

(1) Notice
► Fiber-optic Ethernet module (XGL-EFMF) is not supported.

(2) Terminology
► CPU module direct connection: executes serial communication through the loader port of the CPU module.
► Link: executing serial communication with the communication module of the PLC.

5.2 Wiring Diagram

5.2.1 CPU module direct connection method

Connecting XGT Panel and XGK PLC with CPU module direct connection method (RS-232C) is as follows.

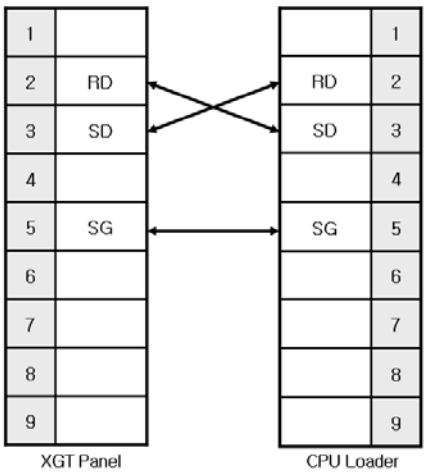

NOTE

(1) Cautions when wiring cable
► In the CPU module loader port is a CPU module that provides built-in Cnet. Be careful not to connect to other pins when wiring.
► CPU module loader port is D-SUB 9P, Female. Use a Male connector when wiring the cable.

5.2.2 Link method: Cnet

Cnet is specified into RS-232C and RS-422/485 type.
Below is the wiring of RS-232C Cnet.

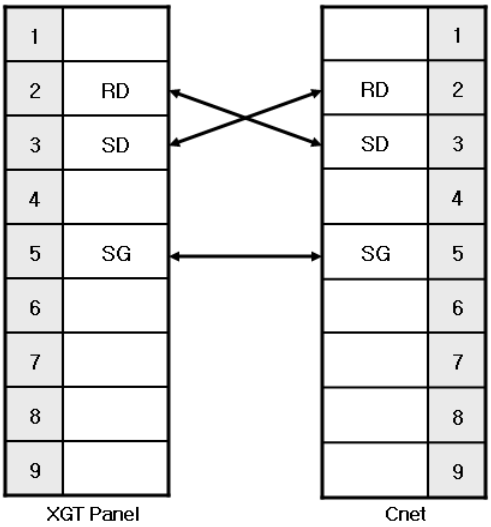

NOTE
(1) Notice ► Refer to chapter 2 for shield wiring.

RS-422 wiring is as below.

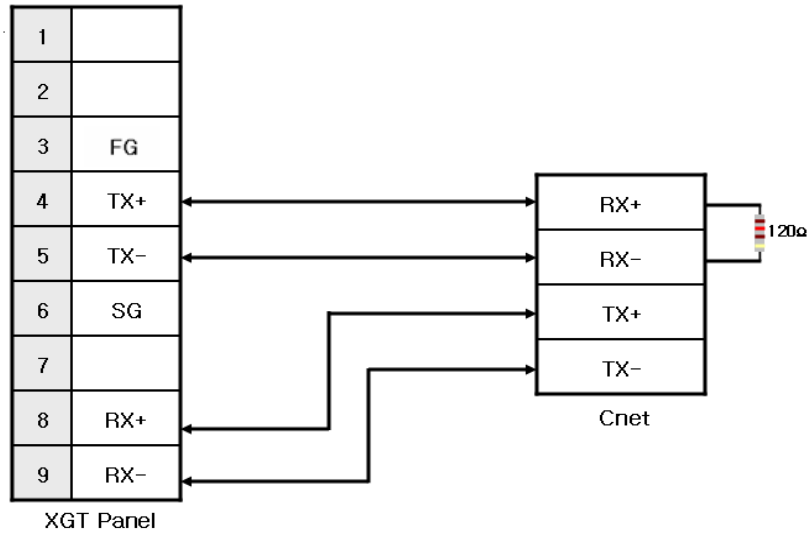

RS-485 wiring is as below.

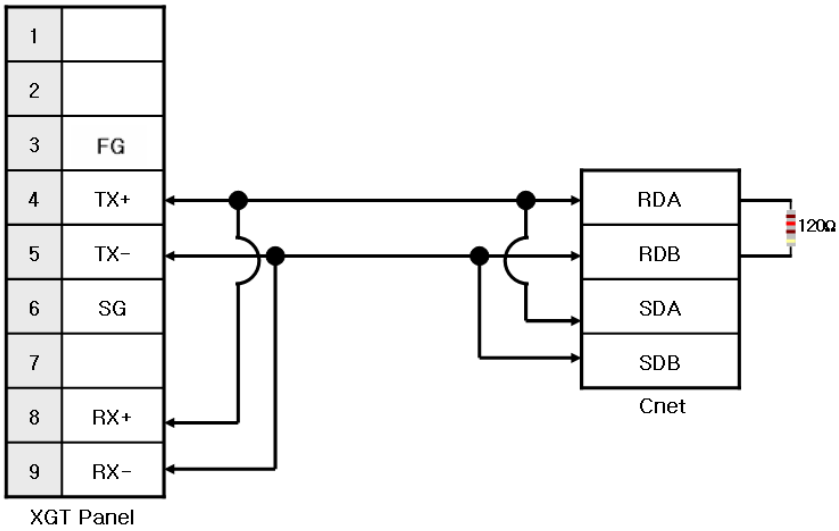

NOTE
(1) Notice ► Set terminal switch of the XGT Panel. ► RS-422/485 port of the PLC does not need an extra connector since it's consisted as a terminal block. ► Refer to chapter 2 for shield wiring.

5.2.3 Link method: FEnet

When connecting XGK and Ethernet, the wiring differs according to its configuration. Refer to chapter 2 for configuration and wiring method.

5.3 Communication Setting

5.3.1 CPU module direct connection method

Communication parameter of the XGT Panel gets set through XP-Builder. (Refer to XP-Builder instruction manual)
XP-Builder provides communication parameter for the CPU module loader as basics.

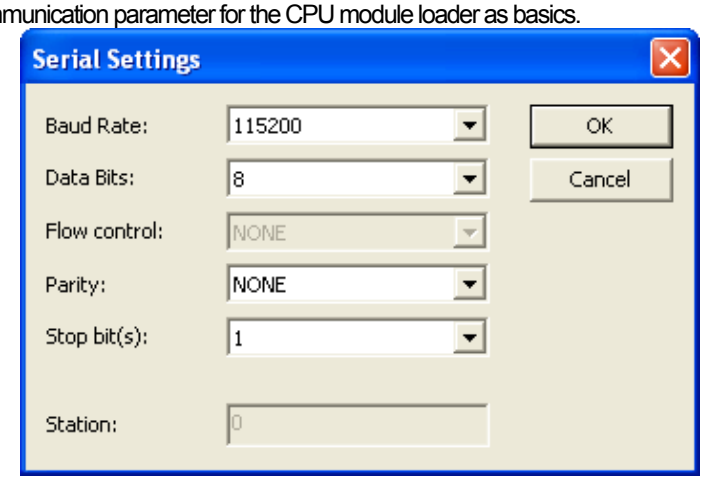

NOTE

(1) Communication state check

► When it is unable to check the communication state with the XGK CPU module, check it by using the XGT Panel Diagnostics and PLC Information function. (Refer to XGT Panel instruction manual)

(2) Cautions when setting XP-Builder

► When creating project and setting communication, set as below.

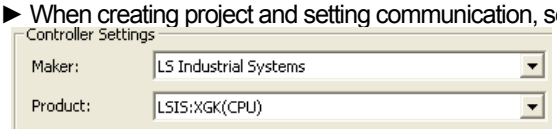

5.3.2 Link method: Cnet

Set Cnet communication parameter of the PLC through XG-PD. (Refer to XGT Cnet instruction manual)
Set Cnet as below.

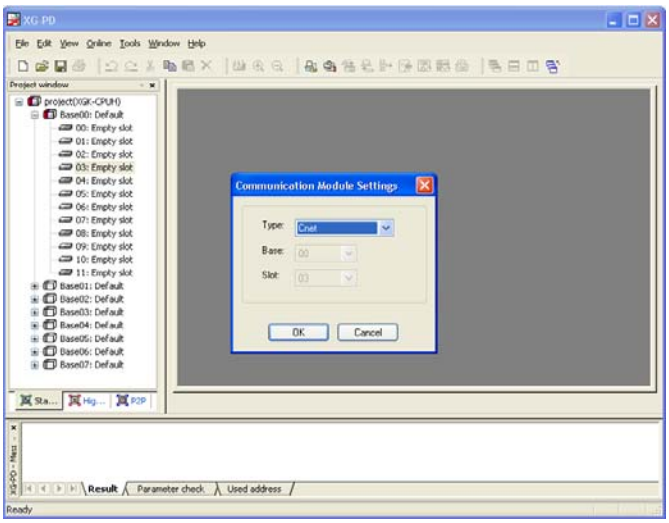

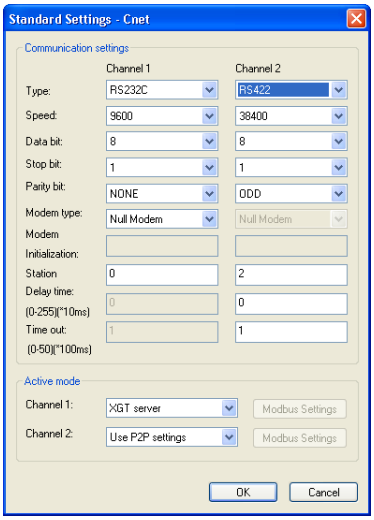

Set up communication parameters to the channel for the use of the communication. Select XGT server at the operation mode.

When write is done and PLC is reset, setting is done.

NOTE

(1) Communication state check

► XG-PD has a monitoring function. Communication data may be checked using this function.

► There are RX, TX LEDs on the Cnet module. These LEDs blink rapidly when communicating normally.

(2) Cautions when setting PLC

► Be sure to reset the PLC after setting the communication parameter.

► This manual explains in brief. Please refer to XGT Cnet operating manual.

► Even if you use only one channel, you should set up parameters of the other channel.

(3) Cautions when setting XP-Builder

► When creating project and setting communication, set as below.

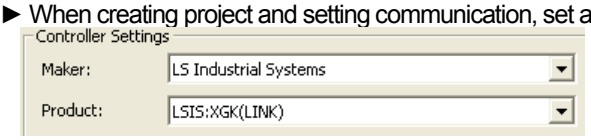

► When configuring 1:N, set transmission stand-by time.

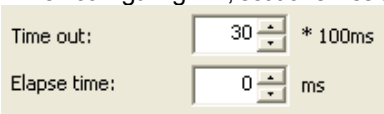

5.3.3 Link method: FEnet

Set up FEnet communication parameters on the XG-PD. (Refer to XGT FEnet operating manual.)

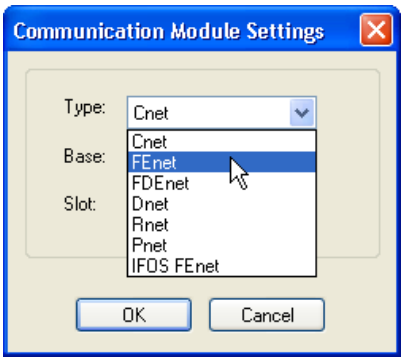

Set up as FEnet for the communication module.

Write communication parameters such as an IP address and a gateway. Select XGT server at the driver setting.

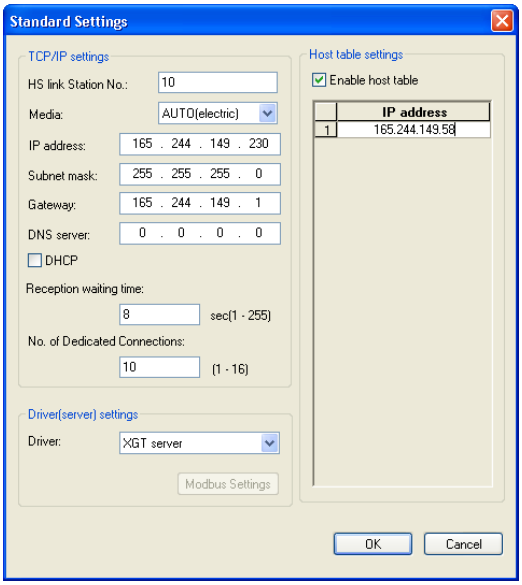

When write is done and PLC is reset, setting is done.

XGT Panel's communication parameter is as below. Select target IP and protocol type.

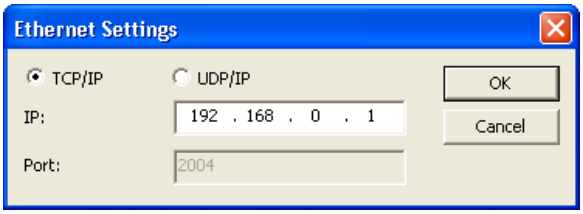

NOTE

(1) Communication state check

► There are RX, TX LEDs on the Cnet module. These LEDs blink rapidly when communicating normally.

(2) Cautions when setting XP-Builder

► When creating project and setting communication, set as below.

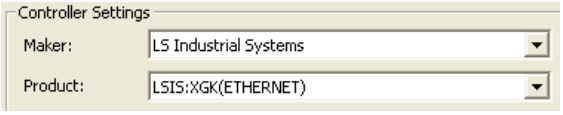

5.4 Available Device

Available devices of the XGT Panel are as below:

Area	Size	Bit points	Word data	Remark
P	32768 point	P00000 ~ P2047F	P0000 ~ P2047	
M	32768 point	M00000 ~ M2047F	M0000 ~ M2047	
K	32768 point	K00000 ~ K2047F	K0000 ~ K2047	
F	32768 point	F00000 ~ F2047F	F0000 ~ F2047	
T	2048 point	T0000 ~ T2047	T0000 ~ T2047	
C	2048 point	C0000 ~ C2047	C0000 ~ C2047	
U	3072 word	U00.00.0 ~ U7F.31.F	U00.00 ~ U7F.31	
S	128 word	S00.00 ~ S127.99	WORD N/A	
L	180224 point	L000000 ~ L11263F	L00000 ~ L11263	
N	21K word	Contact point N/A	N00000 ~ N21503	
D	32K word	D00000.0 ~ D32767.F	D00000 ~ D32767	
ZR	32K word	Contact point N/A	ZR00000 ~ ZR65535	

NOTE

(1) Notice

► For instructions on using devices and specific information, please refer to the XP-Builder instruction manual.

► Please make sure to use the device within the range.

► Device range may differ according to the CPU module. Refer to each CPU module's instruction manual.

Chapter 6 LSIS: XGB PLC

6.1 PLC List

XGT Panel is able to connect to XGB PLC.

PLC	CPU module	Connection method	Comm. method	Connection Module	Remarks
XGB	XBM-DR16S XBM-DN16S XBM-DN32S	CPU direct connection	RS-232C	CPU Module	-
		Link	RS-232C	CPU Module	Internal Cnet
		Link	RS-485	CPU Module	Internal Cnet
		Link	RS-422/485	XBL-C41A	Cnet

NOTE

(1) Terminology
- ► CPU module direct connection: executes serial communication through the loader port of the CPU module.
- ► Link: executing serial communication with the communication module of the PLC.

6.2 Wiring Diagram

6.2.1 CPU module direct connection method

This figure is a way to connect XGT Panel to XGK PLC with the CPU module direct connection method.

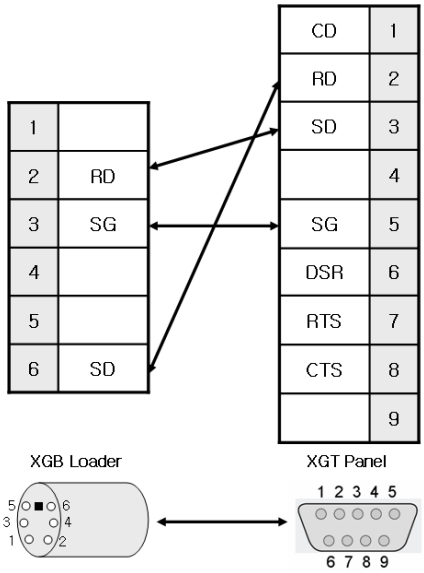

NOTE

(1) Cautions when wiring cable
- ► In the CPU module loader port is a CPU module that provides built-in Cnet. Be careful not to connect to other pins when wiring.
- ► For your convenience, purchase a loader cable of the CPU module.

6.2.2 Link method: Built-in Cnet

Cnet is specified into RS-232C and RS-422/485 type.

Below is the wiring of RS-232C Cnet.

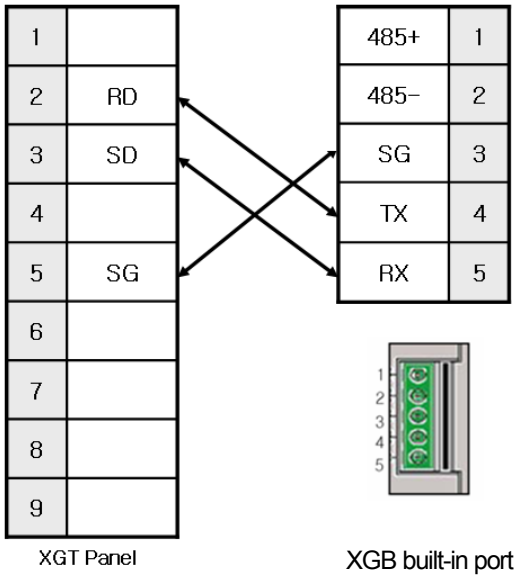

RS-485 wiring is as below.

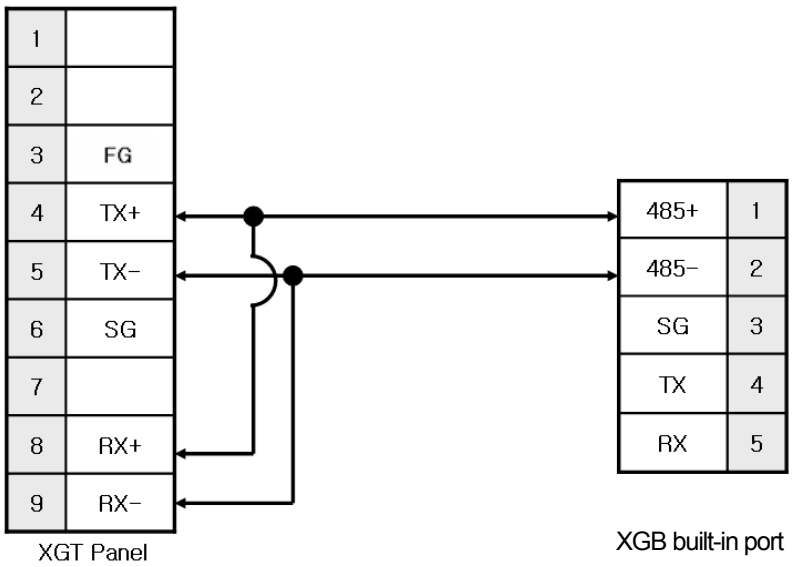

NOTE

(1) Notice

- ► Refer to chapter 2 for shield wiring.
- ► Set terminal switch of the XGT Panel to wire as RS-485.
- ► RS-422/485 port of the PLC does not need an extra connector since it's consisted as a terminal block.

6.2.3 Link method: Cnet

Now XGB provides Cnet only for RS-422/485.

RS-422 wiring is as below.

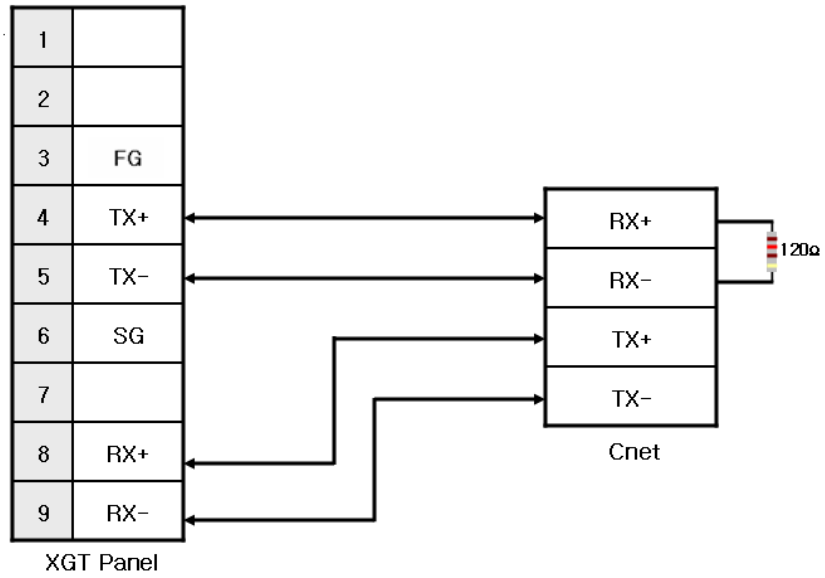

RS-485 wiring is as below.

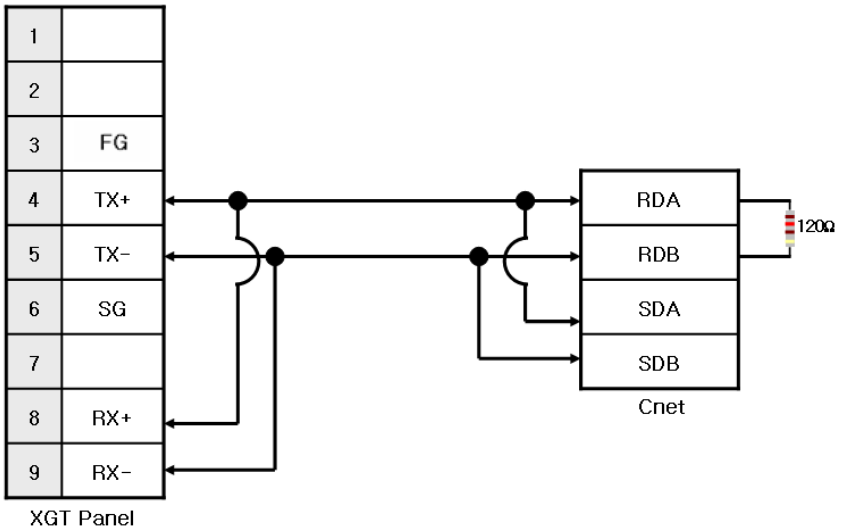

NOTE
(1) Notice ► Set terminal switch of the XGT Panel. ► RS-422/485 port of the PLC does not need an extra connector since it's consisted as a terminal block. ► Refer to chapter 2 for shield wiring.

6.3 Communication Setting

6.3.1 CPU module direct connection method

Communication parameter of the XGT Panel gets set through XP-Builder. (Refer to XP-Builder instruction manual)
XP-Builder provides communication parameter for the CPU module loader as basics.

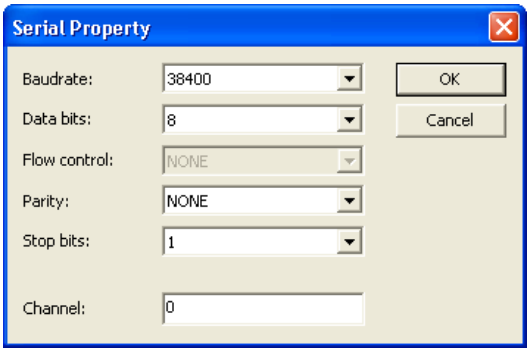

NOTE

(1) Communication state check
► When it is unable to check the communication state with the XGK CPU module, check it by using the XGT Panel Diagnostics and PLC Information function. (Refer to XGT Panel instruction manual)

(2) Cautions when setting XP-Builder
► When creating project and setting communication, set as below.

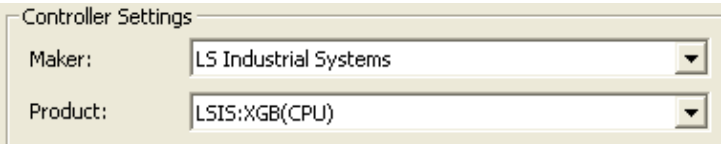

6.3.2 Link method: Built-in Cnet

Set Cnet communication parameter of the PLC through XG-PD. (Refer to XGB Cnet instruction manual)
This is the figure of Cnet configuration. Select an internal Cnet in the basic parameter setting.

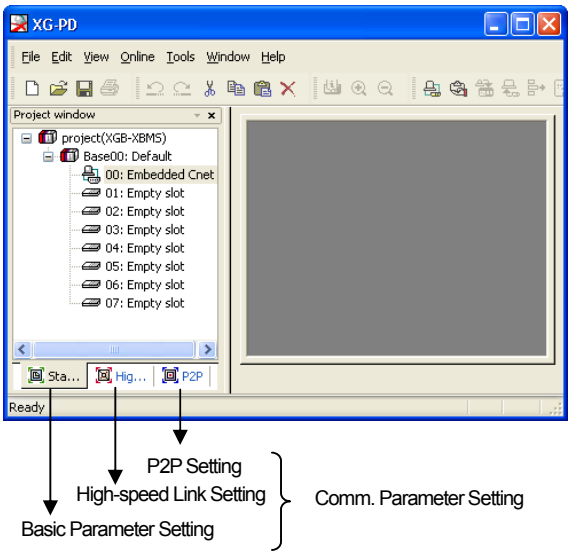

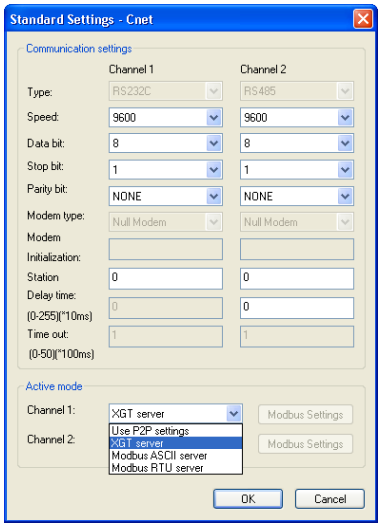

Channel 1 is for RS-232C and channel 2 is for RS-485. Set up communication parameters in each channel.
Select XGT server at the operation mode.

When write is done and PLC is reset, setting is done.

NOTE

(1) Communication state check
► XG-PD has a monitoring function. Communication data may be checked using this function.
(2) Cautions when setting PLC
► Be sure to reset the PLC after setting the communication parameter.
► This manual explains in brief. Please refer to XGB Cnet operating manual.
(3) Cautions when setting XP-Builder
► When creating project and setting communication, set as below.

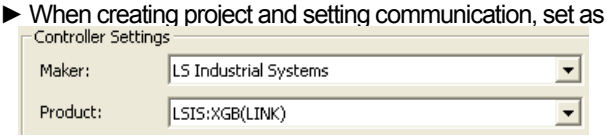

► When configuring 1:N, set transmission Elapse time.

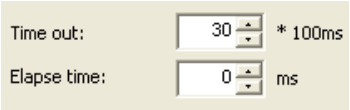

6.3.3 Link method: Cnet

Set up Cnet communication parameters on the XG-PD. (Refer to XGT Cnet operating manual.)
This figure is about Cnet setting.

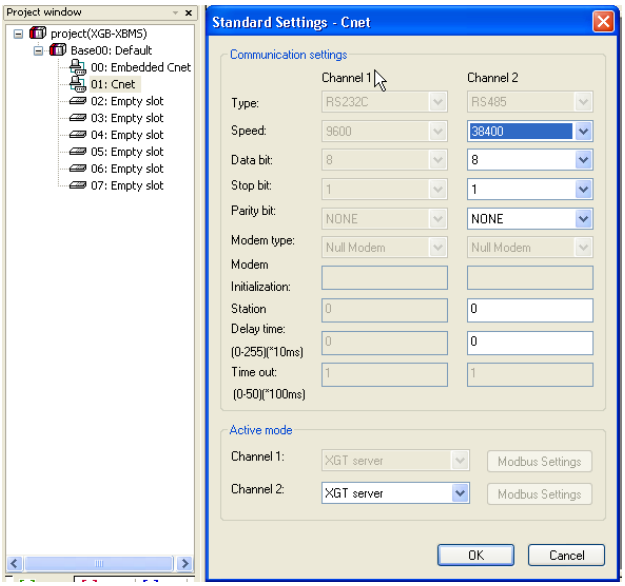

When write is done and PLC is reset, setting is done.

After completion of "Write," then reset the PLC.

NOTE

(1) Communication state check
- ► XG-PD has a monitoring function. Communication data may be checked using this function.
- ► There are RX, TX LEDs on the Cnet module. These LEDs blink rapidly when communicating normally.

(2) Cautions when setting PLC
- ► Be sure to reset the PLC after setting the communication parameter.

(3) Cautions when setting XP-Builder
- ► When creating project and setting communication, set as below.

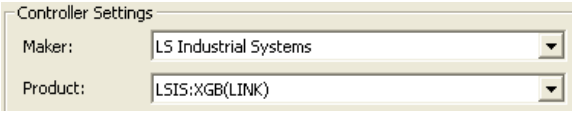

- ► When configuring 1:N, set transmission Elapse time.

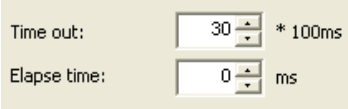

6.4 Available Device

Available devices of the XGT Panel are as below:

Area	Size	Bit points	Word data
P	2048 point	P0000 ~ P127F	P000 ~ P127
M	4096 point	M0000 ~ M255F	M000 ~ M255
K	40960 point	K00000 ~ K2559F	K0000 ~ K2559
F	4096 point	F0000 ~ F255F	F000 ~ F255
T	256 point	T000 ~ T255	T000 ~ T255
C	256 point	C000 ~ C255	C000 ~ C255
U	256 word	U00.00.0 ~ U7F.31.F	U00.00 ~ U7F.31
S	128 word	S00.00 ~ S127.99	WORD N/A
L	20480 point	L00000 ~ L1279F	L0000 ~ L1279
N	3936 word	Contact point N/A	N0000 ~ N3935
D	5120 word	D0000.0 ~ D5119.F	D0000 ~ D5119
Z	128 word	Contact point N/A	Z000 ~ Z127

NOTE

(1) Notice
- ► For instructions on using devices and specific information, please refer to the XP-Builder instruction manual.
- ► Please make sure to use the device within the range.
- ► Device range may differ according to the CPU module. Refer to each CPU module's instruction manual.

Chapter 7 LSIS: XGI PLC

7.1 PLC List

XGT Panel is able to connect to XGI PLC.

PLC	CPU module	Connection method	Comm. method	Connection Module	Remarks
XGI	CPUU	CPU direct connection	RS-232C	CPU Module	-
		Link	RS-232C	XGL-C22A XGL-CH2A	Cnet
		Link	RS-422/485	XGL-C42A XGL-CH2A	Cnet
		Link	Ethernet	XGL-EFMT	-

NOTE

(1) Notice
► Fiber-optic Ethernet module (XGL-EFMF) is not supported.

(2) Terminology
► CPU module direct connection: executes serial communication through the loader port of the CPU module.
► Link: executing serial communication with the communication module of the PLC.

7.2 Wiring Diagram

7.2.1 CPU module direct connection method

Connecting XGT Panel and XGI PLC with CPU module direct connection method (RS-232C) is as follows.

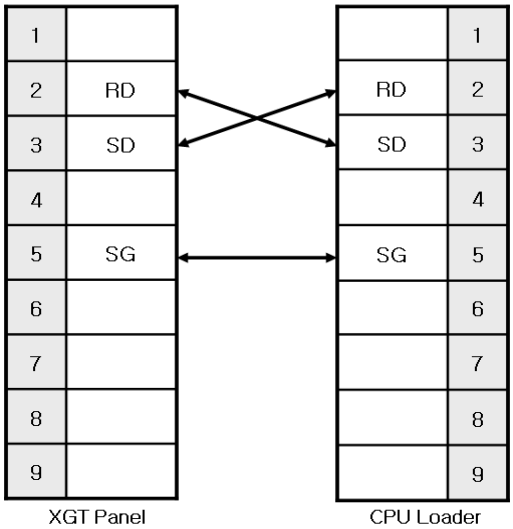

NOTE

(1) Cautions when wiring cable
- ► In the CPU module loader port is a CPU module that provides built-in Cnet. Be careful not to connect to other pins when wiring.
- ► CPU module loader port is D-SUB 9P, Female. Use a Male connector when wiring the cable.

7.2.2 Link method: Cnet

Cnet is specified into RS-232C and RS-422/485 type.
Below is the wiring of RS-232C Cnet.

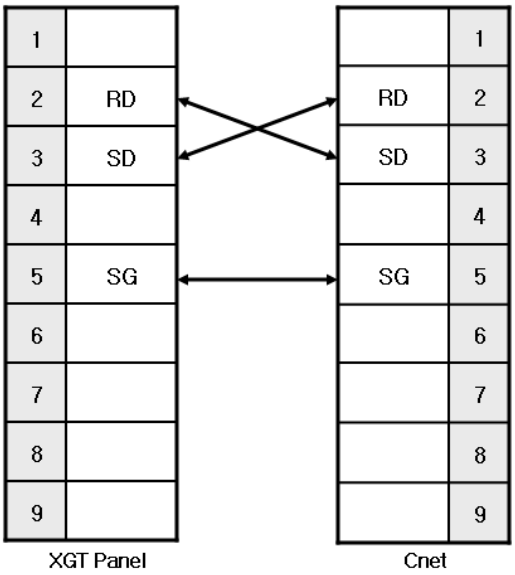

NOTE

(1) Notice
- ► Refer to chapter 2 for shield wiring.

RS-422 Cnet wiring is as below.

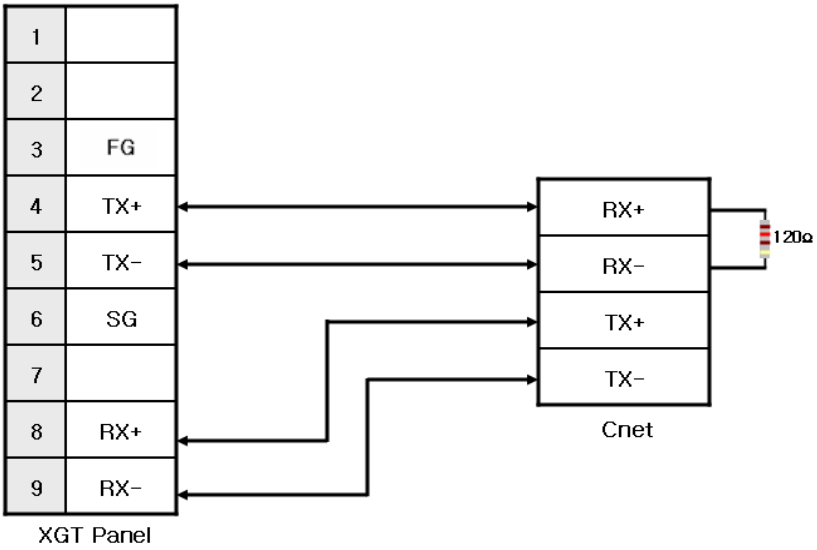

RS-485 Cnet wiring is as below.

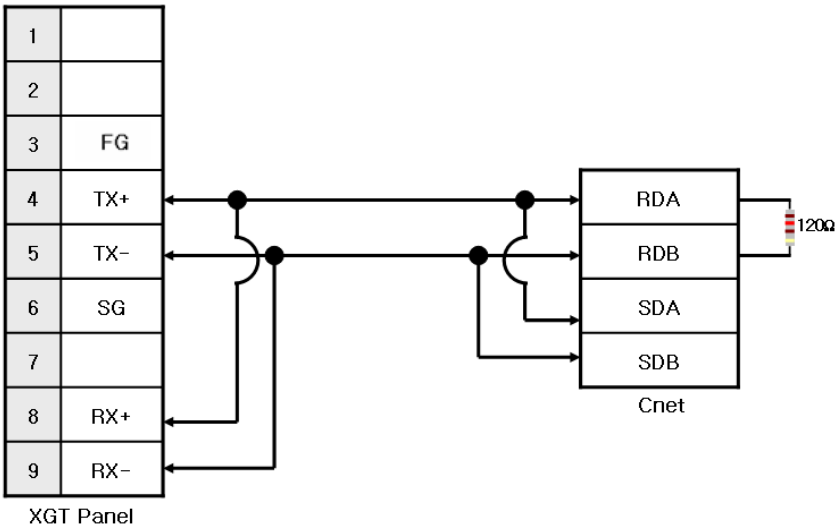

NOTE
(1) Notice ► Set terminal switch of the XGT Panel. ► RS-422/485 port of the PLC does not need an extra connector since it's consisted as a terminal block. ► Refer to chapter 2 for shield wiring.

7.2.3 Link method: FEnet

When connecting XGI and Ethernet, the wiring differs according to its configuration. Refer to chapter 2 for configuration and wiring method.

7.3 Communication Setting

7.3.1 CPU module direct connection method

Communication parameter of the XGT Panel gets set through XP-Builder. (Refer to XP-Builder instruction manual)
XP-Builder provides communication parameter for the CPU module loader as basics.

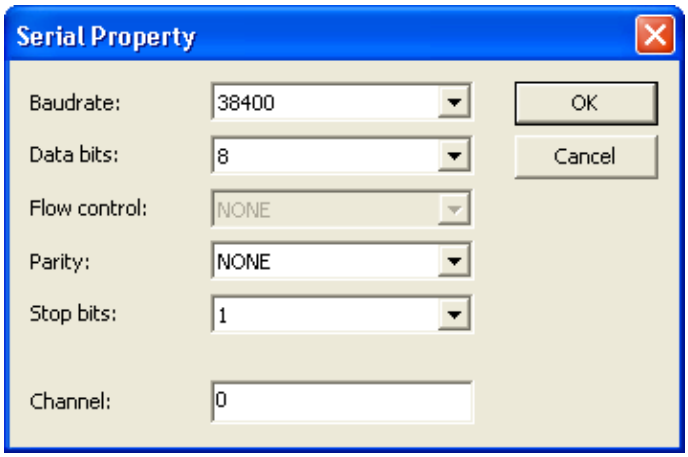

NOTE

(1) Communication state check

► When it is unable to check the communication state with the XGK CPU module, check it by using the XGT Panel Diagnostics and PLC Information function. (Refer to XGT Panel instruction manual)

(2) Cautions when setting XP-Builder

► When creating project and setting communication, set as below.

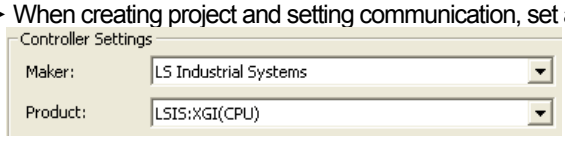

7.3.2 Link method: Cnet

Set Cnet communication parameter of the PLC through XG-PD. (Refer to XGT Cnet instruction manual)
Set Cnet as below.

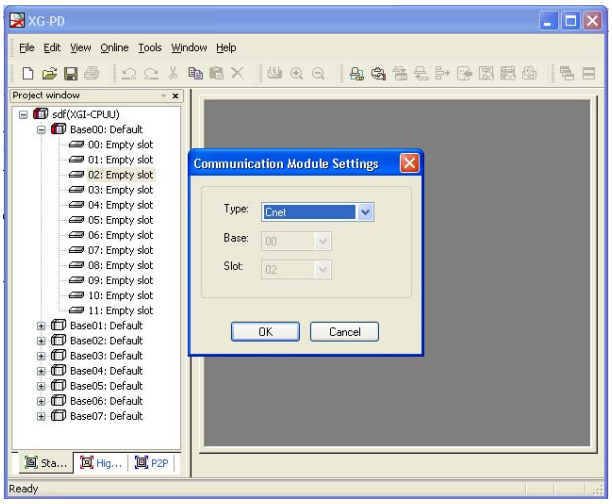

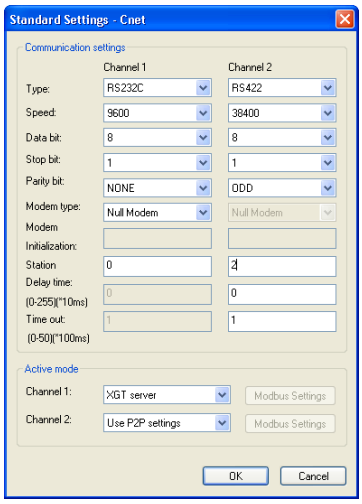

Set up communication parameters to the channel for the use of the communication. Select XGT server at the operation mode.

When write is done and PLC is reset, setting is done.

NOTE

(1) Communication state check

► XG-PD has a monitoring function. Communication data may be checked using this function.

► There are RX, TX LEDs on the Cnet module. These LEDs blink rapidly when communicating normally.

(2) Cautions when setting PLC

► Be sure to reset the PLC after setting the communication parameter.

► This manual explains in brief. Please refer to XGT Cnet operating manual.

► Even if you use only one channel, you should set up parameters of the other channel.

(3) Cautions when setting XP-Builder

► When creating project and setting communication, set as below.

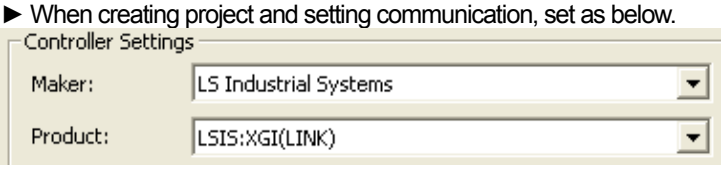

► When configuring 1:N, set transmission Elapse time.

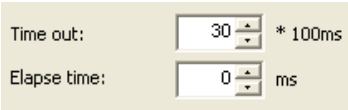

7.3.3 Link method: FEnet

Set up FEnet communication parameters on the XG-PD. (Refer to XGT FEnet operating manual.)

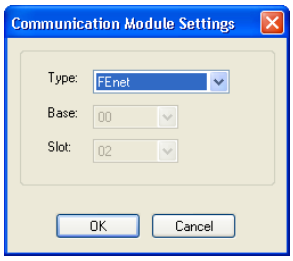

Set up as FEnet for the communication module.

Write communication parameters such as an IP address and a gateway. Select XGT server at the driver setting.

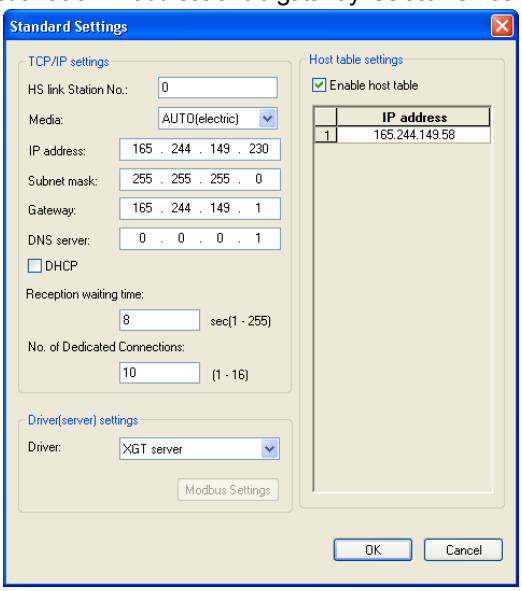

When write is done and PLC is reset, setting is done.

XGT Panel's communication parameter is as below. Select target IP and protocol type.

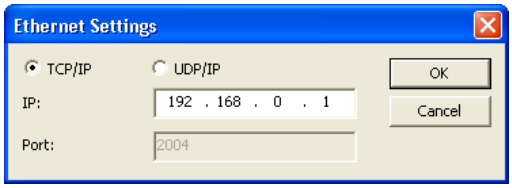

NOTE

(1) Communication state check

► There are RX, TX LEDs on the Cnet module. These LEDs blink rapidly when communicating normally.

(2) Cautions when setting XP-Builder

► When creating project and setting communication, set as below.

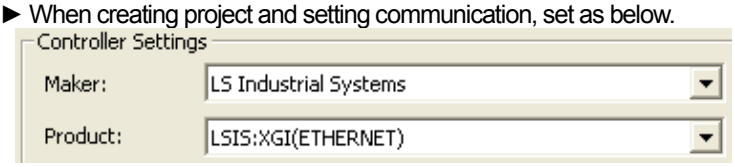

7.4 Available Device

Available devices of the XGT Panel are as below:

Area	Size	Bit points	Word data
%IX	32768 point	%IX0.0.0 ~ %IX63.7.63	WORD N/A
%QX	32768 point	%QX0.0.0 ~ %QX63.7.63	WORD N/A
%MX	131072 point	%MX000000 ~ %MX131071	WORD N/A
%WX	65536 point	%WX00000 ~ %WX65535	WORD N/A
%IW	2047 word	Contact point N/A	%IW0.0.0 ~ %IW63.7.3
%QW	2047 word	Contact point N/A	%QW0.0.0 ~ %QW63.7.3
%MW	59999 word	%MW00000.0 ~ %MW131071.15	%MW00000 ~ %MW65535
%WW	65536 word	%WW00000.0 ~ %WW65535.15	%WW00000 ~ %WW65535

NOTE

(1) Notice

► For instructions on using devices and specific information, please refer to the XP-Builder instruction manual.

► Please make sure to use the device within the range.

► Device range may differ according to the CPU module. Refer to each CPU module's instruction manual.

Chapter 8 MITSUBISHI: MELSEC-Q PLC

8.1 PLC List

XGT Panel is able to connect to MELSEC-Q PLC.

PLC	CPU Module	Connection method	Comm. method	Connection Module	Remarks
MELSEC-Q	Q00J, Q00, Q01, Q02, Q02H, Q06H, Q12H, Q25H, Q12PH, 25PH	Link	RS-232C	QJ71C24N QJ71C24N-R2	Cnet
		Link	RS-422/485	QJ71C24N QJ71C24N-R4	Cnet
		Link	Ethernet	QJ71E71-100	FEnet

NOTE

(1) Notice
► CPU module direct connection (loader) is not supported.

(2) Terminology
► Link: executing serial communication with the communication module of the PLC.

8.2 Wiring Diagram

8.2.1 CPU direct connection method

Connects with MITSUBISHI Q CPU via RS-232C
Wiring of CPU direct connection is as follows.

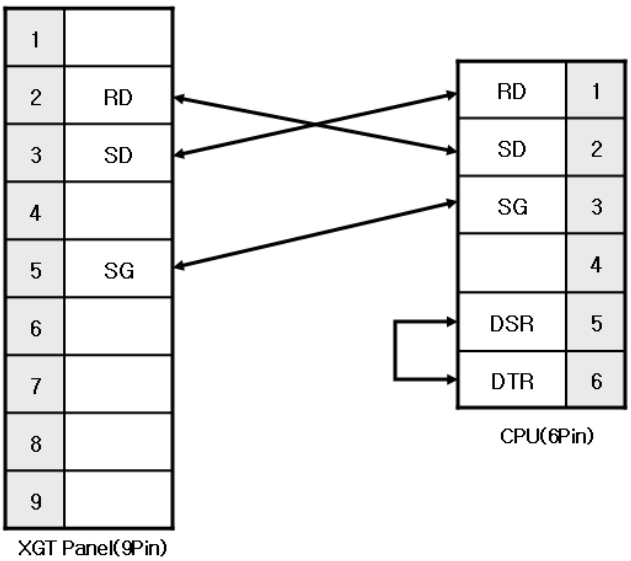

In order to connect with MITSUBISHI Q CPU, make 6-pin connector

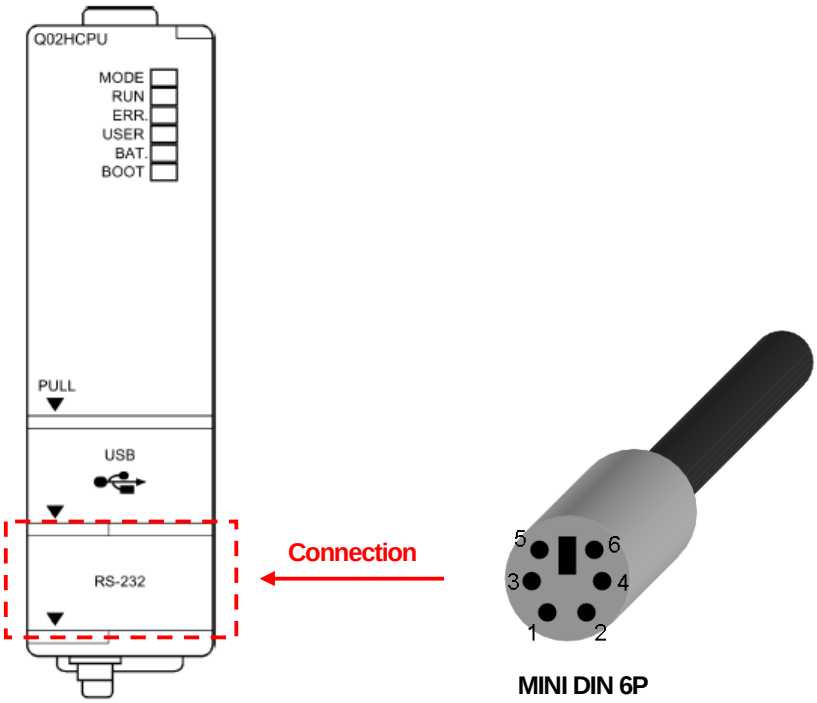

Note

1) Notice
► MESEC-Q loader cable (QC3OR) of MITSUBISHI and PMC-310S cable of LSIS are not available.

8.2.2 Link method: Cnet

Cnet is specified into RS-232C and RS-422/485 type.
Below is the wiring of RS-232C.

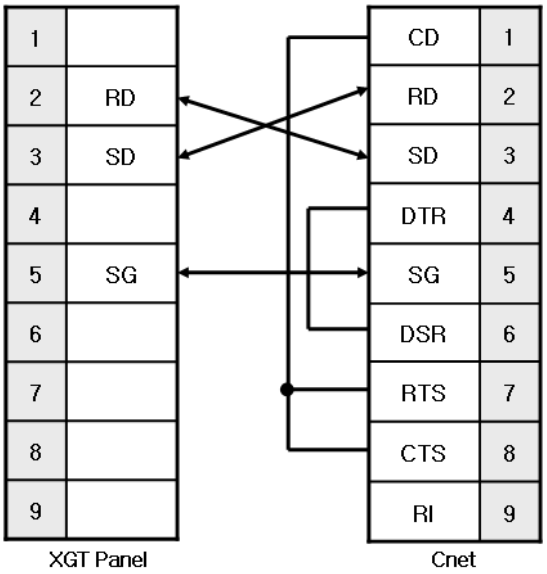

NOTE

1) Notice
► MELSEC-Q Cnet (RS-232C) uses flow control, so it communicates only with the wiring as above.
► Refer to chapter 2 for shield wiring.

QJ71C24N (RS-422) wiring is as below.

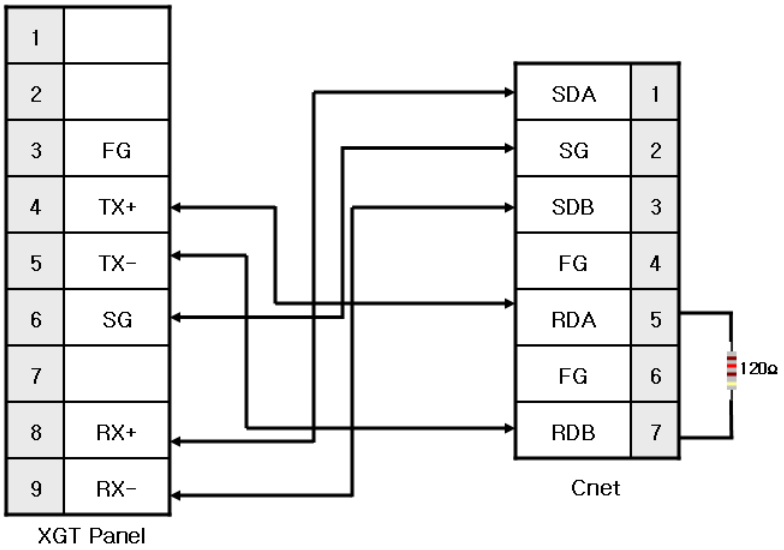

QJ71C24N-4R(RS-422) wiring is as below.

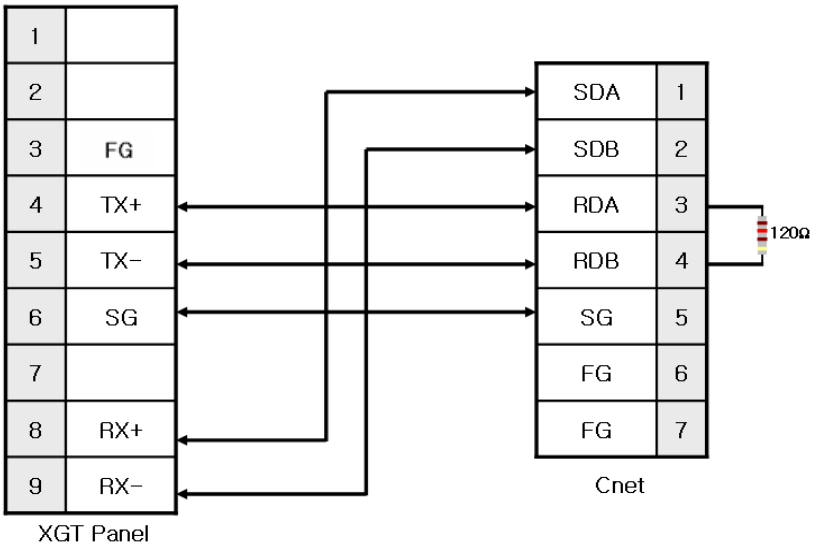

NOTE
(1) Notice ► Set terminal switch of the XGT Panel. ► RS-422/485 port of the PLC does not need an extra connector since it's consisted as a terminal block. ► For safe communication, shielded wiring is recommended. Refer to chapter 2 for shield wiring.

8.2.3 Link method: FEnet

When connecting XGI and Ethernet, the wiring differs according to its configuration. Refer to chapter 2 for configuration and wiring method.

8.3 Communication Setting

8.3.1 CPU direct connection method

When using CPU direct connection method, special setting for PLC is not needed.
MELSEC-Q PLC configures communication setting automatically. For setting of XP-Builder, refer to the following.

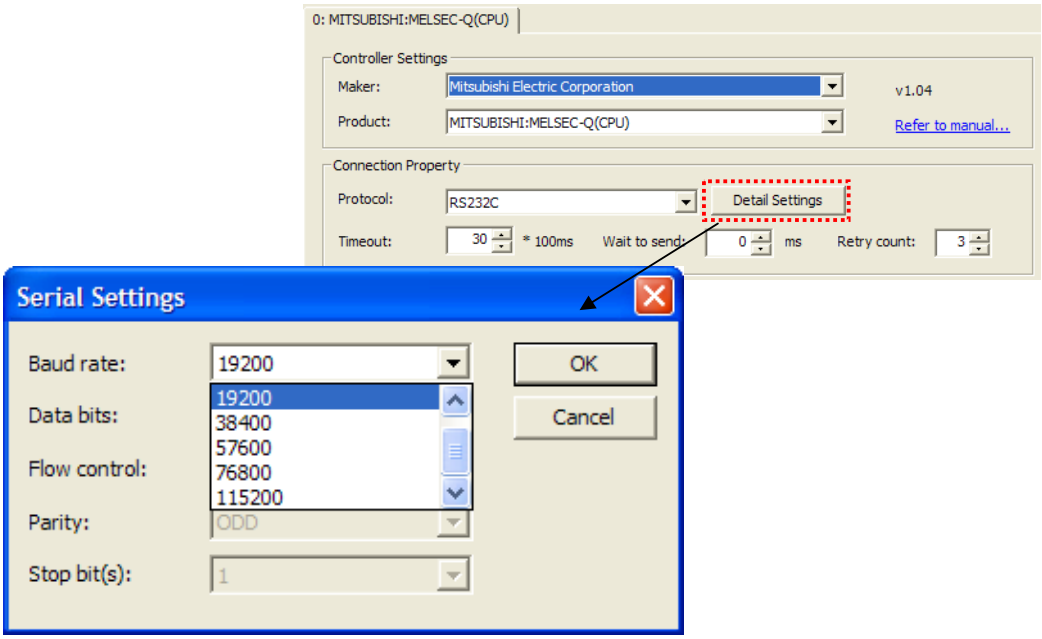

Notice

(1) Notice in communication

- ► When you try the communication with MELSEC-Q CPU initially, delay may occurs because of automatic communication setting of CPU. This case is normal status, not error.
- ► While MELSEC-Q CPU communicates with XGT Panel, if you try to change the PLC program and settings via USB port of CPU, error message occurs. In the case, cancel the XGT Panel connection and change the PLC program and setting, then establish the XGT Panel connection again.

8.3.2 Link method: Cnet

Cnet communication parameter of PLC can be specified at GX Developer. For more detail, refer to MITSUBISHI user manual.

(1) Select 'Parameter → PLC parameter → I/O allocation' at the GX Developer.

(2) Setting screen appears. And then allocate I/O.

Item	Setting
Type	Select 'Intelligent'
Name	Select module name currently being installed For example, if currently installed module is QJ71C24N, select 'QJ71C24N'
Point	Select 32-point.
Head XY	Specify the head I/O address of module.

* Intelligent: name of Q series PLC modules operating by command of PLC CPU.

(3) Specify the switch by selecting the switch setting button.

Switch No.	Contents
SW1	Communication setting of CH1
SW2	Protocol setting of CH1
SW3	Communication setting of CH2
SW4	Protocol setting of CH2
SW5	Station number setting

<Configuration of SW1, 3>

B15	B14	B13	B12	B11	B10	B9	B8	B7	B6	B5	B4	B3	B2	B1	B0

Comm. speed

Comm. parameter

Baud rate (bps)	Upper byte (B15 ~ B8)
9,600	05H
19,200	07H
38,400	09H
57,600	0AH
115,200	0BH

Bit	Contents	0	1	Reference
B7	Modifying settings	Disable	Enable	Set as Enable(1)
B6	Online editing	Disable	Enable	Set as Enable(1)
B5	SUM check code	None	Presence	Set as Presence(1)
B4	Stop bit	1	2	-
B3	Parity type	Odd	Even	-
B2	Parity	None	Presence	-
B1	Data bit	7	8	-
B0	Writing setting	Individual	Interlock	In case of using only one communication channel, set as Individual

<Configuration of SW2, SW4>

SW2 and SW4 are items to set a communication protocol. Set as **'4'.**

NOTE

(1) Communication state check

► There are RX, TX LEDs on the Cnet module. These LEDs are blink rapidly when communicating normally.

(2) Cautions when setting PLC

► Refer to operating manual of MITSUBISHI when setting up a PLC.

(3) Cautions when setting XP-Builder

► When creating project and setting communication, set as below.

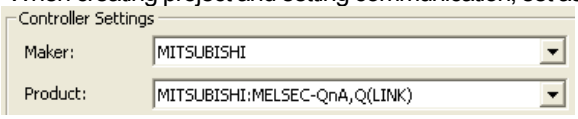

► When configuring RS-422/485 1:N, set transmission stand-by time.

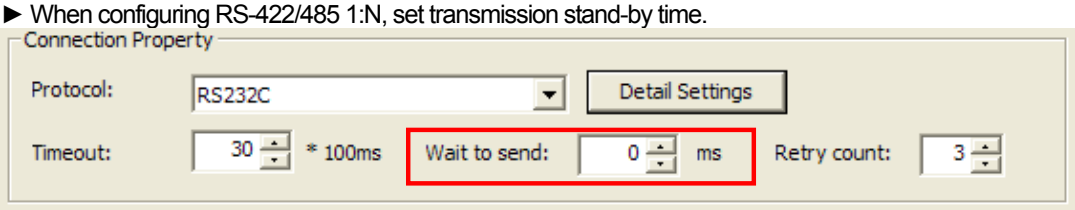

8.3.3 Link method: FEnet

Set up FEnet communication parameters of PLC on the GX Developer. Please refer to operating manual of MITSUBISHI, for more detail

(1) Select 'Parameter → PLC parameter → I/O allocation' at the GX Developer.

(2) Setting screen appears as above, then allocate I/O.

Item	Setting
Type	Select 'Intelligent'
Name	Select module name currently being installed For example, if currently installed module is QJ71E71, select 'QJ71E71'
Point	Select 32-point.
Head XY	Specify the head I/O address of module.

* Intelligent: name of Q series PLC modules operating by command of PLC CPU.

(3) Select 'Parameter → Network parameter → MELSECNET/Ethernet' at the GX Developer.

(4) Ethernet network parameter appears. Set the parameter

Item	Setting
Network type	Set as Ethernet.
Head I/O No.	Set head I/O address of module
Network No.	Doesn't affect the communication. Any value is ok.
Total No. of station	Doesn't affect the communication. Any value is ok
Group No.	Doesn't affect the communication. Any value is ok
Station No.	Doesn't affect the communication. Any value is ok
Mode	Set as online.

(5) Select the operating settings and set IP address, then set other items.

(6) Select the Open settings and set.

<In case of UDP/IP>

Item	Settings
Protocol	Set as 'UDP'
Fixed buffer	Set as 'Transmission'
Fixed buffer communication procedure	Set as 'Presence of procedure'
Pairing open	Set as 'doesn't pair'
Check survival	Set as 'doesn't check'
Self station port number	Set the port number with hexadecimal in hexadecimal
Target IP address	Input the IP address of XGT Panel.
Target station port number	Set the port number of XGT Panel in hexadecimal.

<In case of TCP/IP>

Item	Settings
Protocol	Set as 'TCP'
Open method	Set as 'Full passive'
Fixed buffer	Set as 'reception'
Fixed buffer communication procedure	Set as 'Presence of procedure'
Pairing open	Set as 'Pair'. Transmission protocol is generated automatically.
Check survival	'Set as 'doesn't check'
Self station port number	Set the port number with hexadecimal in hexadecimal
Target IP address	Input the IP address of XGT Panel.
Target station port number	Set the port number of XGT Panel in hexadecimal.

<Notice in setting the port>
For MELSEC-Q, 5000~5002 are used as automatic open type.
We recommend you to use 5003 (138B in hexadecimal) or more.
And for XGT Panel, we recommend you to use 1025 (0401B in hexadecimal) or more.

Next figure is communication parameters of XGT Panel. Set up target IP, protocol, and port number on the XP-Builder. A port number differs according to UDP/IP or TCP/IP. Please set up as below.

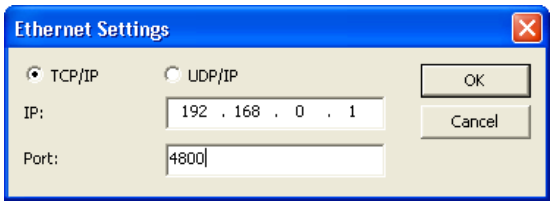

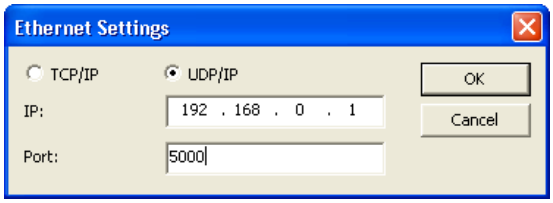

New functions added at XP Builder V1.04, not used in case of MELSEC-Q Ethernet communication. You can enter any value.
TCP: port: 4800 (local: 12345)
UDP: port: 5000 (local: 12345)

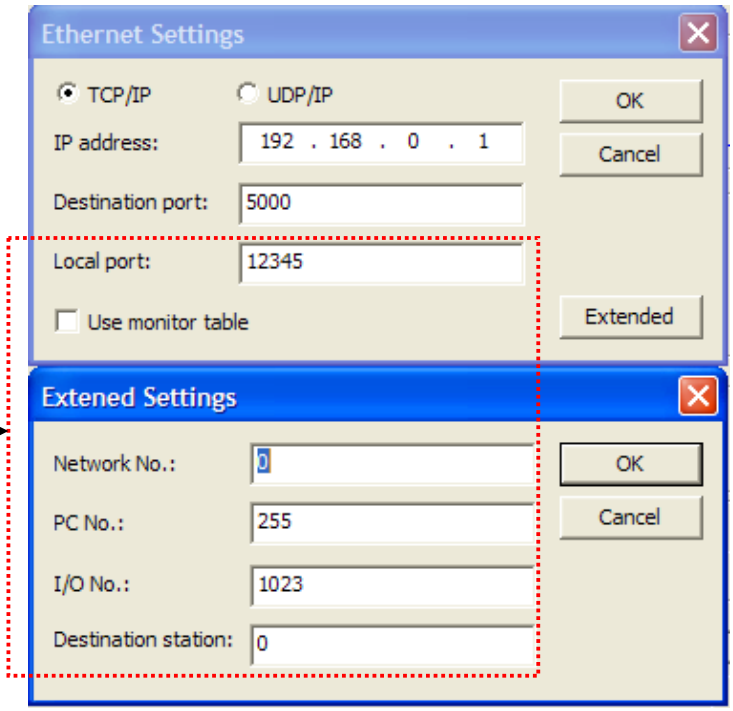

NOTE

(1) Communication state check
► There are RX, TX LEDs on the FEnet module. These LEDs are blink rapidly when communicating normally.

(2) Cautions when setting XP-Builder
► When creating project and setting communication, set as below.

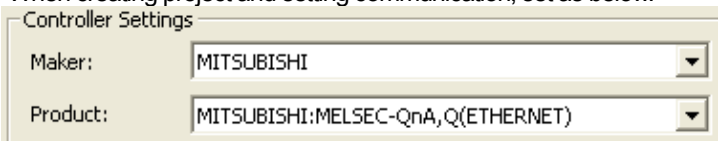

8.4 Available Device

Available devices of the XGT Panel are as below:

Area	Size	Bit points	Word data	Remark
X	8192 point	X0000 ~ X1FFF	X0000 ~ X1FF0	Hexadecimal
Y	8192 point	Y0000 ~ Y1FFF	Y0000 ~ Y1FF0	Hexadecimal
M	32768 point	M00000 ~ M32767	M00000 ~ M32752	Decimal
L	32768 point	L00000 ~ L32767	L00000 ~ L32752	Decimal
F	32768 point	F00000 ~ F32767	F00000 ~ F32752	Decimal
B	32768 point	B0000 ~ B7FFF	B0000 ~ B7FF0	Hexadecimal
TS(TT)	32768 point	TS00000 ~ TS32767	WORD N/A	Decimal
TC	32768 point	TC00000 ~ TC32767	WORD N/A	Decimal
CT	32768 point	CT00000 ~ CT32767	WORD N/A	Decimal
CC	32768 point	CC00000 ~ CC32767	WORD N/A	Decimal
SM	2048 point	SM0000 ~ SM2047	SM0000 ~ SM2032	Decimal
SS	32768 point	SS00000 ~ SS32767	WORD N/A	Decimal
SC	32768 point	SC00000 ~ SC32767	WORD N/A	Decimal
SD	2047 word	SD0000.0 ~ SD2047.F	SD0000 ~ SD2047	Decimal
SB	2048 point	SB000 ~ SB7FF	SB000 ~ SB7F0	Hexadecimal
V	2048 point	V0000 ~ V2047	V0000 ~ V2032	Decimal
D	32768 word	D00000.0 ~ D32767.F	D00000 ~ D32767	Decimal
SN	32768 word	SN00000.0 ~ SN32767.F	SN00000 ~ SN32767	Decimal
W	32768 word	W0000.0 ~ W7FFF.F	W0000 ~ W7FFF	Hexadecimal
TN	32768 word	TN00000.0 ~ TN32767.F	TN00000 ~ TN32767	Decimal
CN	2048 word	CN00000.0 ~ CN32767.F	CN00000 ~ CN32767	Decimal
SW	2048 word	SW000.0 ~ SW7FF.F	SW000 ~ SW7FF	Hexadecimal
S	32768 point	S00000 ~ S32767	S00000 ~ S32752	Decimal
R	32768 word	D00000.0 ~ D32767.F	D00000 ~ D32767	Decimal
ZR	1042432 word	-	-	-

NOTE

(1) Notice

► For instructions on using devices and specific information, please refer to the XP-Builder instruction manual.

► Please make sure to use the device within the range.

► Device range may differ according to the CPU module. Refer to each CPU module's instruction manual.

Chapter 9 SYMBOL: Bar Code Scanner

9.1 Bar Code Scanner List

XGT Panel is able to connect to bar code scanner of SYMBOL as below:

Bar code series	Communication method
LS 2208AP	RS-232C

NOTE

(1) Notice
► XGT Panel supports RS-232C interface excluding USB interface.

9.2 Wiring Diagram

Bar code scanner of SYMBOL offers a RS-232C cable.
Connect the cable to RS-232C port of the XGT Panel.

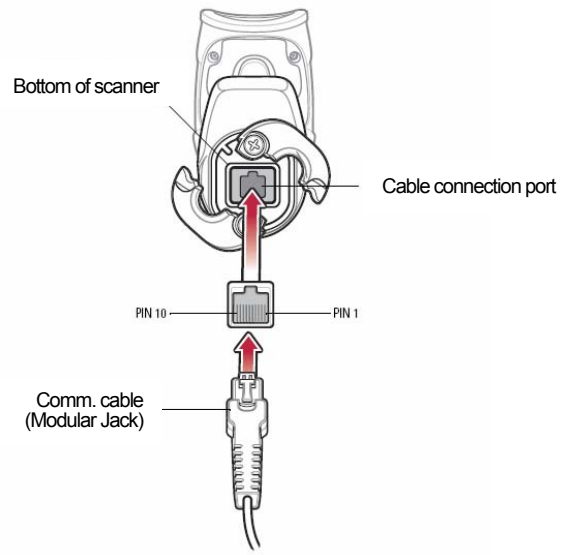

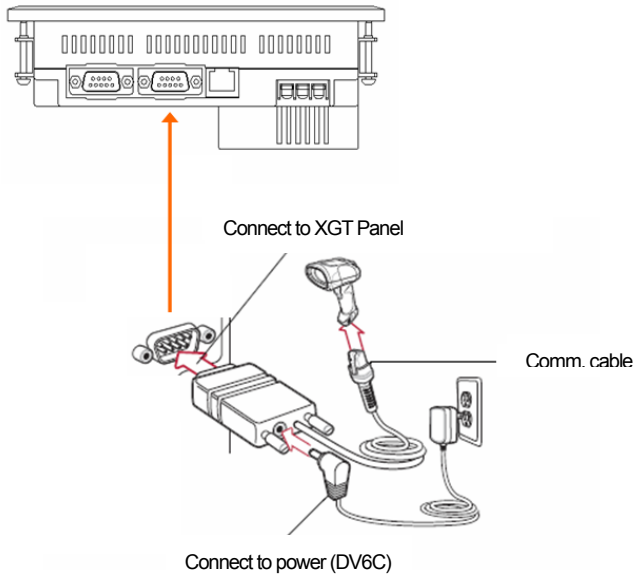

NOTE

(1) Notice
► You should connect power for the bar code.
► Refer to manual of scanner for matters that require attention.

9.3 Communication Setting

Set up communication setting of the scanner as shown below.
Scan below bar codes to set up.

Set up as Standard RS-232 type.

*Standard RS-232

Set up a baud rate.

*Baud Rate 9600

Baud Rate 19,200

Baud Rate 38,400

Set up a parity bit.

*None

Odd

Even

Set up a stop bit.

*1 Stop Bit

2 Stop Bits

Set up a data bit.

7-Bit

*8-Bit

Set up the communication of XGT Panel through XP-Builder. (Refer to operating manual of XP-Builder)
Select 'Use bar code' at the project property of the XP-Builder.

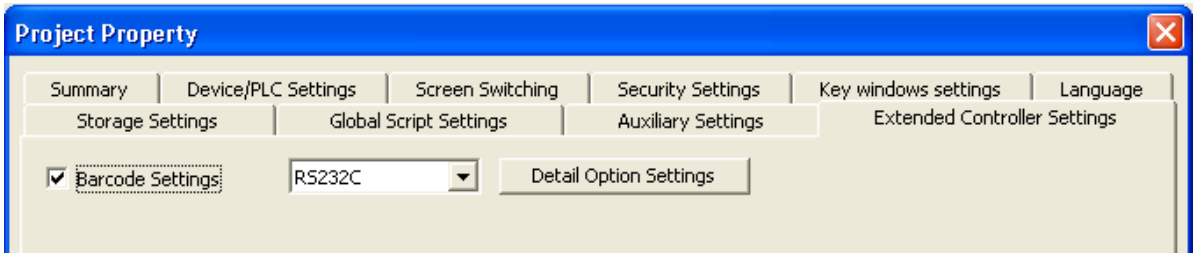

You can set up communication parameters as below through the Barcode Option setting of detail connection.
Set up communication parameters as like as the scanner.

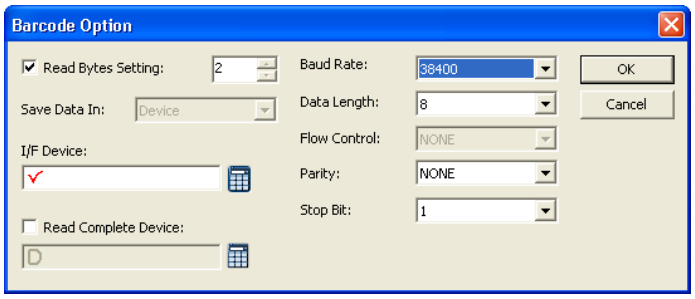

You can communicate with the bar code scanner by transmitting an image file which is drawn with this setting to the XGT Panel.

NOTE

(1) Notice
- ► There is no need to set up a communication setting every time. Set up once and operate it.
- ► Details are written in the operating manual of the scanner.
- ► If communication parameters of scanner and XGT Panel are different, it can't operate normally.

Chap.10 LS Industrial Systems : Inverter(MODBUS)

MODBUS RTU Driver of LS Industrial Systems is available since V1.02 so if you use the previous version, please apply XP-Builder and XGT Panel software that are beyond V1.02 from our web-site.
MODBUS is based on Open Protocol. To communicate with the LS Industrial Systems' inverter, MODBUS-RTU protocol is used and at this time XGT Panel becomes a master.
It is impossible to explain all kinds of LS Industrial Systems' inverters because of limited space so the description on how to set wiring and communication for main kinds of devices will be provided.

10.1 Inverter List

XGT Panel can be connected to an inverter as below.

Kinds of machines	Communication type	Protocol	Remarks
SV-iG	RS-485	MODBUS-RTU	External communication type option
SV-iS3			External communication type option
SV-iV			External communication type option
SV-iH			External communication type option
SV-iS5			External communication type option
SV-iG5			Embedded communication
SV-iV5			External communication type option
SV-iC5			External communication type option
SV-iP5A			Embedded communication
SV-iG5A			Embedded communication

Notice

(1) The maximum number of connected devices is 31EA.
(2) The total length of communication line is extended to 1,200[m], however for stable communication, it should be within 500[m].
(3) An inverter has different communication setting and wiring depending on the kinds of machines so refer to the inverter manual for installation.

10.2 Wiring Diagram

10.2.1 RS-485 Communication Type

The wiring diagram for RS-485 communication is as below. (In the case of SV-iG5A)

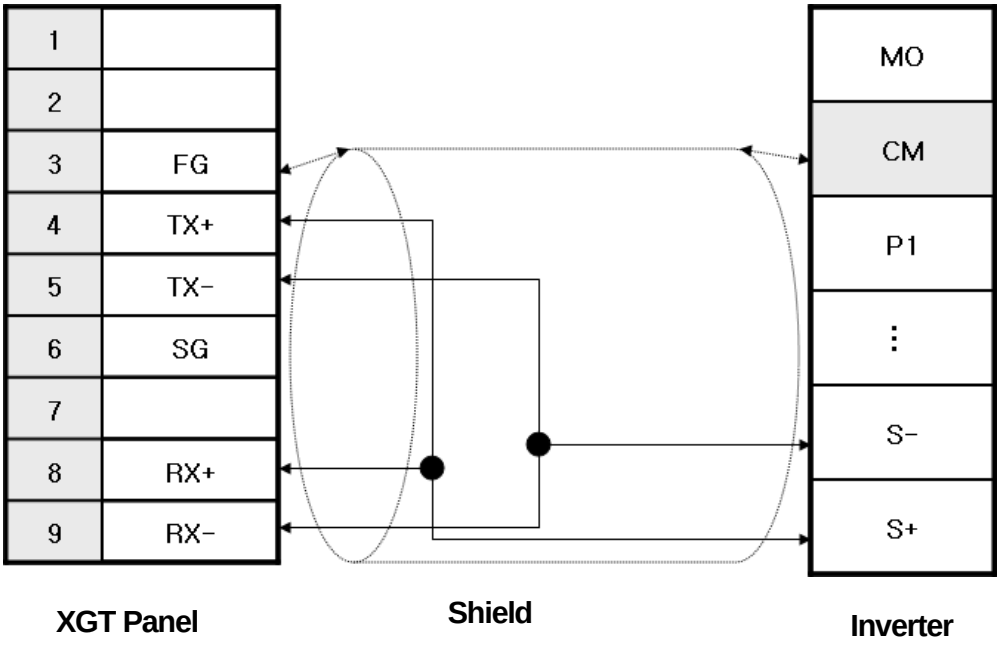

RS-485 wiring for external communication option is as below.

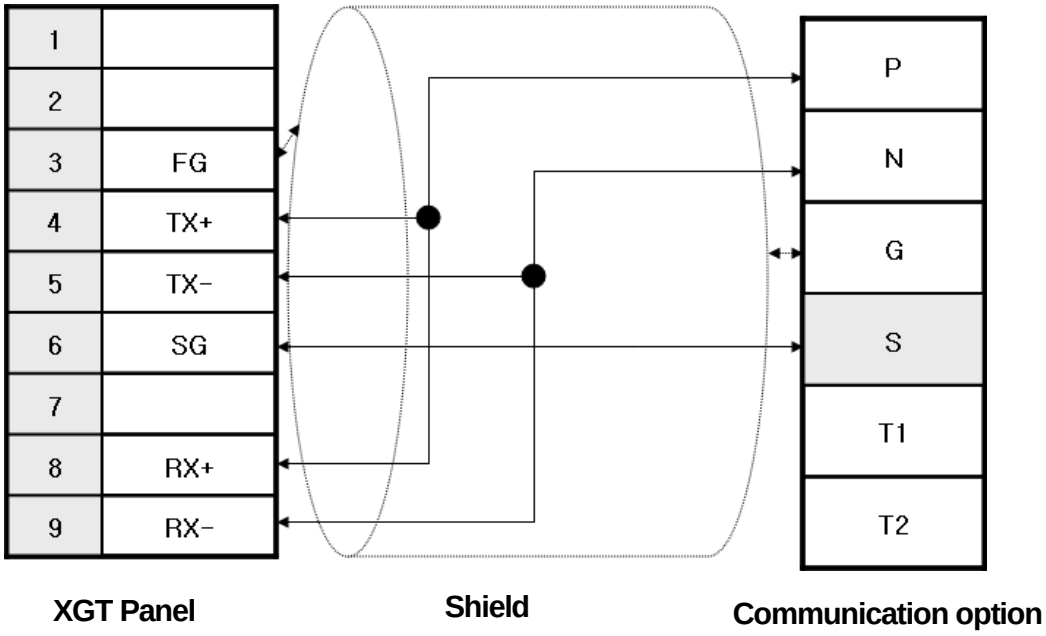

Notice

(1) Suggestions

► The array of connector and pin may be different depending on the inverter type. (Embedded communication type, external communication type)

► Check the end switch of XGT Panel. It is basically set as terminator type.

► The above wiring diagram is for 1:1 connection and for 1:N connection, refer to the Chap.2.
(In the case of 1:N mode, connect a terminate resistor to the last inverter.)

► **A shielded wire is recommended for stable communication.** For shield wiring, refer to the Chap.2.

► If noise generated from an inverter or the motor connected to an inverter flows into the cable, communication may be interrupted intermittently. In this case, connect one side to FG or remove FG to normalize communication.

10.3 Communication Setting

The communication parameter of an inverter (SV-iG5A) can be set with 4 –way switch for editing function code. Setting methods are different depending on the device type so for details, refer to the inverter communication manual.

The description on how to set RS-485 for embedded communication type(SV-iG5A) will be provided hereupon.

(1) SV-IG5A(Embedded communication type)
The outward appearance of module is as below.

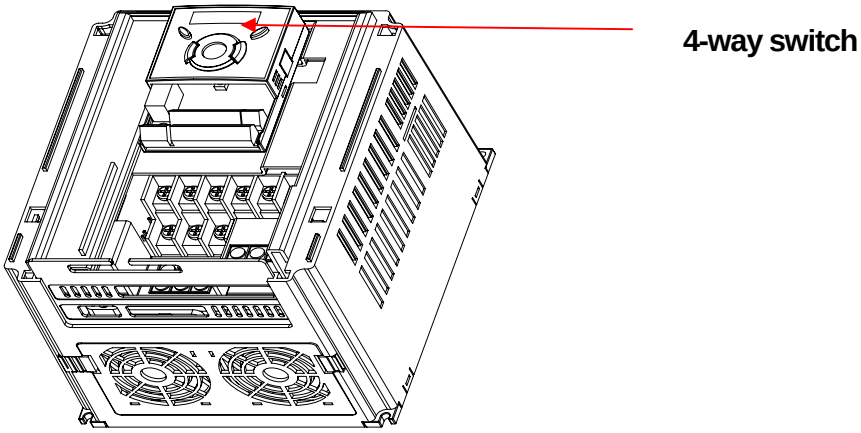

To set the communication parameter of an inverter, select each function code with 4-way switch and apply the communication setting for your own working circumstances.
For inverter communication of iG5A, if you set operation command type 3(communication operation), frequency setting method 7(communication operation), it will be communication operation mode. The below is detailed setting items.

(a) Set communication protocol as 'MODBUS RTU'.

Code	Function	Setting range	Description	
I59	Setting communication protocol	0~1	Setting communication protocol	
			0	MODBUS RTU
			1	LS BUS

(b) Set the inverter No.

Code	Function	Setting range	Description
I60	Inverter No.	1~32	In the case of 1:N connection, set different No. from other inverters.

(c) Set the communication speed.

Code	Function	Setting range	Description	
I61	Communication speed	0~4	XGT Panel does not provide the speed of less tan 9,600[bps] (0~2)	
			3	9,600[bps]
			4	19,200[bps]

(d) Set parity/stop bit.

Code	Function	Setting range	Description	
I65	Parity/Stop bit	0~3	Setting communication transmission format.	
			0	Parity : None, Stop Bit : 1
			1	Parity : None, Stop Bit : 2
			2	Parity : Even, Stop Bit : 1
			3	Parity : Odd, Stop Bit : 1

Notice

(1) Suggestions s

► When connecting several inverters, make sure to avoid overlapped No.

► XGT Panel allows communication transmission speed of 9,600, 19,200, 38,400, 57,600, 115,200 so the speed of less than 9,600 is not available.

You can set the communication parameter of XGT Panel at XP-Builder(Refer to XP-Builder manual). XP-Builder provides basically communication parameters as below.

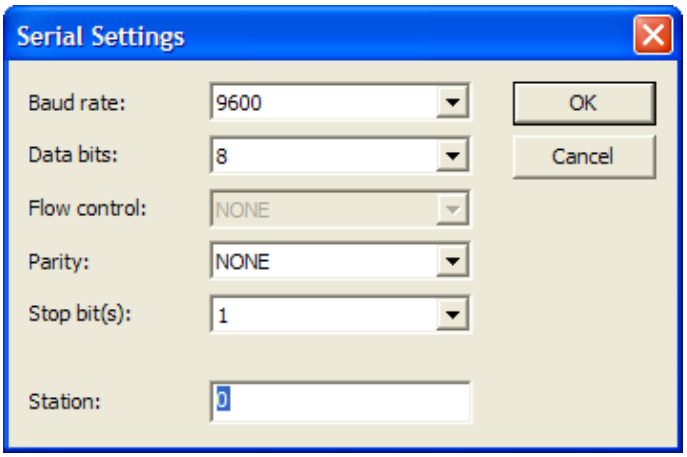

Notice

(1) Suggestions to set inverter

► For installation, make sure to refer to LS Industrial Systems' inverter manual.

► Especially, mind that setting methods are different depending on the kinds of machines.

(2) Suggestions to set XP-Builder

► When creating project or setting communication, refer to the below.

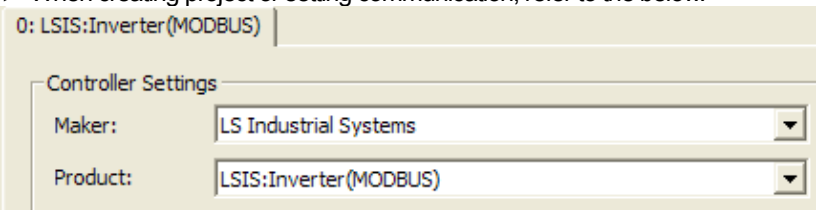

► When making RS-485 as 1:N, set transmission waiting time flexibly depending on communication composition. (Recommended : 50~100ms)

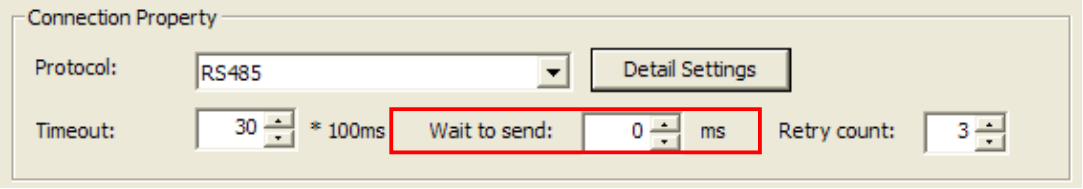

10.4 Available Device

The available devices for XGT Panel are as below and refer to the following table for address area for each machine.

Type	Address	Parameter	Remarks
Common Area	0000 - 04FF	Common area for all inverters	Displaying Hexadecimal number
	0500 - 09FF	Vector area	Displaying Hexadecimal number
Area by the kinds of machines	1000 - 1FFF	SV-IG parameter	Displaying Hexadecimal number
	2000 - 2FFF	SV-IS3 parameter	Displaying Hexadecimal number
	3000 - 3FFF	SV-IV parameter	Displaying Hexadecimal number
	4000 - 4FFF	SV-IH parameter	Displaying Hexadecimal number
	5000 - 5FFF	SV-IS5 parameter	Displaying Hexadecimal number
	6000 - 6FFF	SV-IG5 parameter	Displaying Hexadecimal number
	7000 - 7FFF	SV-IV5 parameter	Displaying Hexadecimal number
	8000 - 8FFF	SV-IC5 parameter	Displaying Hexadecimal number
	9000 - 9FFF	SV-IP5A parameter	Displaying Hexadecimal number
	A000 - AFFF	SV-IG5A parameter	Displaying Hexadecimal number

(1) LS SV-IG5A

Classification	Address area	Remarks
DRV	A100 - A1FF	Displaying Hexadecimal number
FU1	A200 – A2FF	Displaying Hexadecimal number
FU2	A300 – A3FF	Displaying Hexadecimal number
I/O	A400 - A4FF	Displaying Hexadecimal number

(2) LS SV-IP5

Classification	Address area	Remarks
MAK	9000 - 90FF	Displaying Hexadecimal number
DRV	9100 - 91FF	Displaying Hexadecimal number
FU1	9200 - 92FF	Displaying Hexadecimal number
FU2	9300 - 93FF	Displaying Hexadecimal number
I/O	9400 - 94FF	Displaying Hexadecimal number
EXT	9500 - 95FF	Displaying Hexadecimal number
COM	9600 - 96FF	Displaying Hexadecimal number
APP	9700 - 97FF	Displaying Hexadecimal number

(3) LS SV-IV5

Classification	Address area	Remarks
MAK	7000 - 70FF	Displaying Hexadecimal number
DIS	7100 - 71FF	Displaying Hexadecimal number
I/O	7200 - 72FF	Displaying Hexadecimal number
PAR	7300 - 73FF	Displaying Hexadecimal number
FUN	7400 - 74FF	Displaying Hexadecimal number
CON	7500 - 75FF	Displaying Hexadecimal number
EXT	7600 - 76FF	Displaying Hexadecimal number
USR	7700 - 77FF	Displaying Hexadecimal number
2nd	7800 - 78FF	Displaying Hexadecimal number
E/L	7900 - 79FF	Displaying Hexadecimal number

Notice

(1) Suggestions

► For the method to use device with details, refer to inverter manual.

► Use it within device area.

► Device range may be different depending on an inverter so refer to each inverter manual.

Chap.11 LS Industrial Systems: Inverter(LS BUS)

LSBUS RTU Driver of LS Industrial Systems is available since V1.02 so if you use the previous version, please apply XP-Builder and XGT Panel software that are beyond V1.02 from our web-site.

This manual does not cover all kinds of LS Industrial Systems' inverters because of limited space so the description on how to set wiring and communication for main kinds of devices will be provided hereupon.

11.1 Inverter List

XGT Panel can be connected to an inverter as below.

Kinds of machines	Communication type	Protocol	Remarks
SV-iG	RS-485	MODBUS-RTU	External communication type option
SV-iS3			External communication type option
SV-iV			External communication type option
SV-iH			External communication type option
SV-iS5			External communication type option
SV-iG5			Embedded communication
SV-iV5			External communication type option
SV-iC5			External communication type option
SV-iP5A			Embedded communication
SV-iG5A			Embedded communication

Notice

(1) The maximum number of connected devices is 31EA.
(2)The total length of communication line is extended to 1,200[m], however, for stable communication, it should be within 500[m].
(3)An inverter has different communication setting and wiring depending on the kinds of machines so refer to the inverter manual for installation.

11.2 Wiring Diagram

11.2.1 RS-485 Communication Type

The wiring diagram for RS-485 communication is as below. (In the case of SV-iG5A)

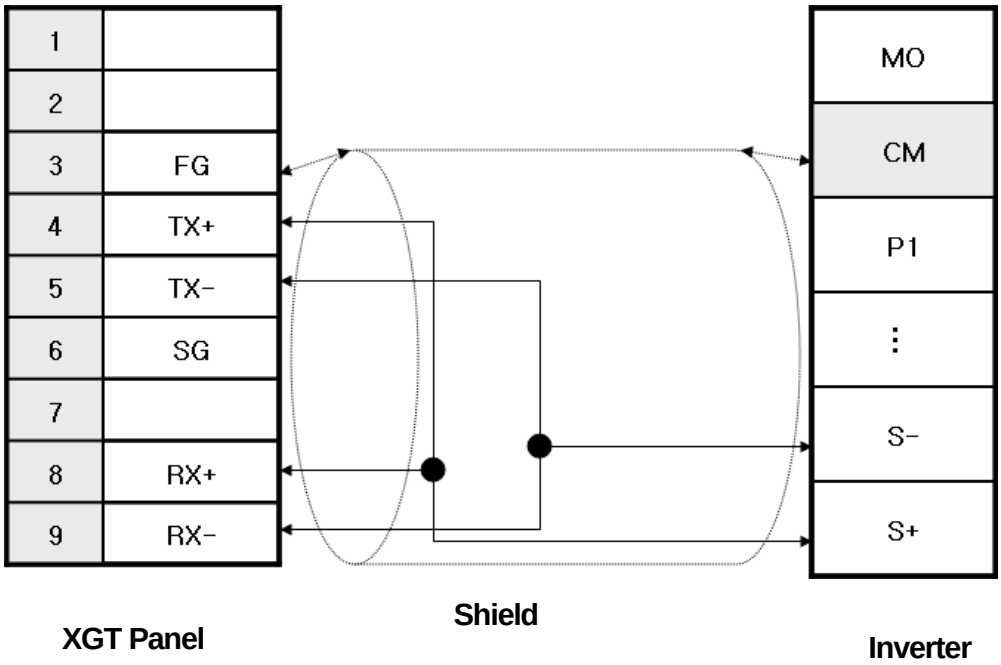

RS-485 wiring for external communication option is as below.

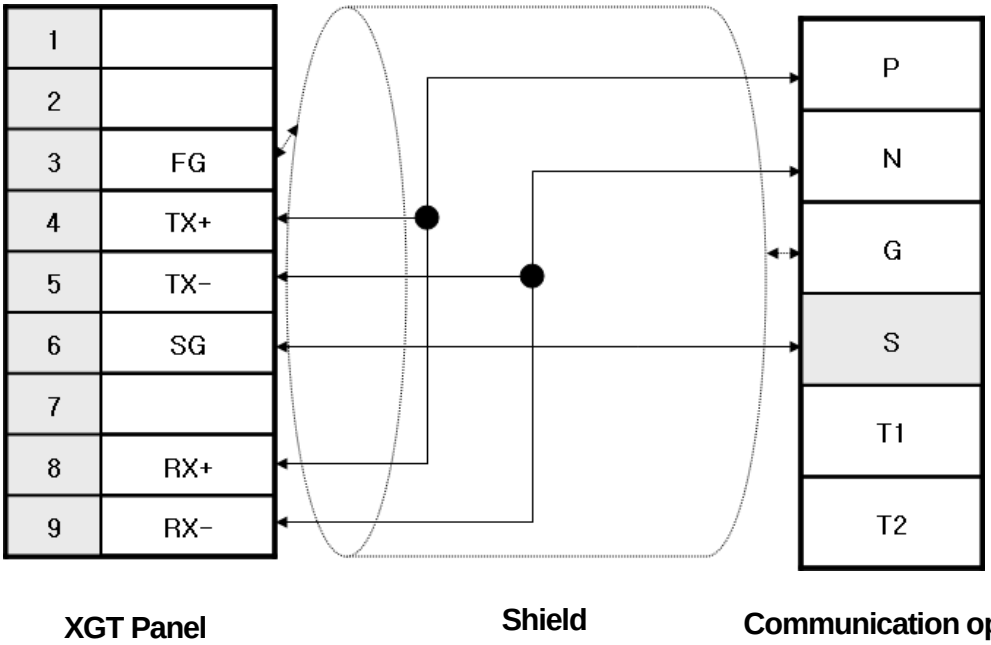

Notice

(1) Suggestions

- ► The array of connector and pin may be different depending on the inverter type. (Embedded communication type, external communication type)
- ► Check the end switch of XGT Panel. It is basically set as terminator type.
- ► The above wiring diagram is for 1:1 connection and for 1:N connection, refer to the Chap.2.
  (In the case of 1:N mode, connect a terminate resistor to the last inverter.)
- ► **A shielded wire is recommended for stable communication.** For shield wiring, refer to the Chap.2. .
- ► If noise generated from an inverter or the motor connected to an inverter flows into the cable, communication may be interrupted intermittently. In this case, connect one side to FG or remove FG to normalize communication.

11.3 Communication Setting

The communication parameter of an inverter (SV-iG5A) can be set with 4 –way switch for editing function code. Setting methods are different depending on the device type so for details, refer to the inverter communication manual.

The description on how to set RS-485 for embedded communication type(SV-iG5A) will be provided hereupon.

(1) SV-IG5A(Embedded communication type)
The outward appearance of module is as below.

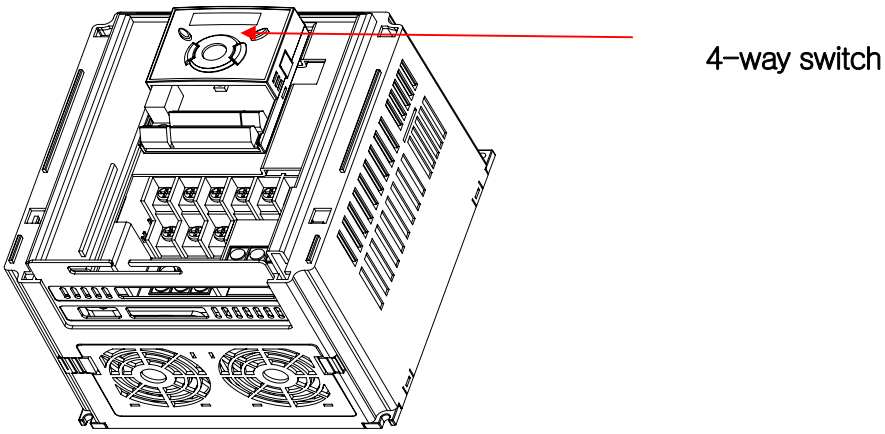

To set the communication parameter of an inverter, select each function code with 4-way switch and apply the communication setting for your own working circumstances.
For inverter communication of iG5A, if you set operation command type 3(communication operation), frequency setting method 7(communication operation), it will be communication operation mode. The below is detailed setting items.

(a) Set communication protocol as LS BUS.

Code	Function	Setting range	Description	
I59	Setting communication protocol	0~1	Setting communication protocol	
			0	MODBUS RTU
			1	LS BUS

(b) Set the inverter No.

Code	Function	Setting range	Description
I60	Inverter No.	1~32	In the case of 1:N connection, set different No. from other inverters.

(c) Set the communication speed.

Code	Function	Setting range	Description	
I61	Communication speed	0~4	XGT Panel does not provide the speed of less tan 9,600[bps] (0~2) (0~2)	
			3	9,600[bps]
			4	19,200[bps]

(d) Set parity/stop bit.

Code	Function	Setting range	Description	
I65	Parity/Stop bit	0~3	Setting communication transmission format.	
			0	Parity : None, Stop Bit : 1
			1	Parity : None, Stop Bit : 2
			2	Parity : Even, Stop Bit : 1
			3	Parity : Odd, Stop Bit : 1

Notice

(1) Suggestions s

- ► When connecting several inverters, make sure to avoid overlapped No.
- ► XGT Panel allows communication transmission speed of 9,600, 19,200, 38,400, 57,600, 115,200 so the speed of less than 9,600 is not available.

You can set the communication parameter of XGT Panel at XP-Builder(Refer to XP-Builder manual). XP-Builder provides basically communication parameters as below.

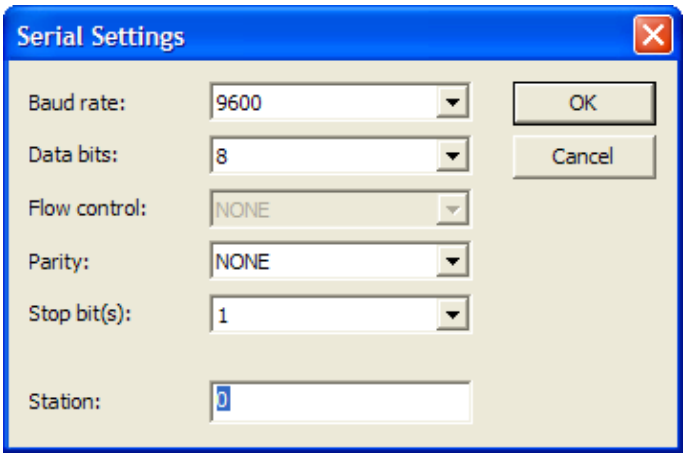

Notice

(1) Suggestions to set inverter

► For installation, make sure to refer to LS Industrial Systems' inverter manual.

► Especially, mind that setting methods are different depending on the kinds of machines.

(2) Suggestions to set XP-Builder

► When creating project or setting communication, refer to the below.

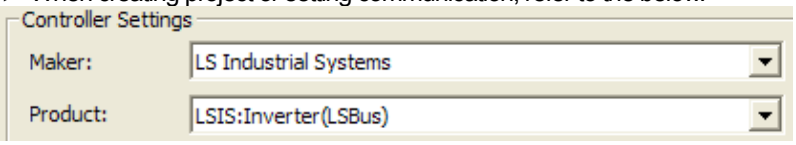

► When making RS-485 as 1:N, set transmission waiting time flexibly depending on communication composition. (Recommended : 50~100ms)

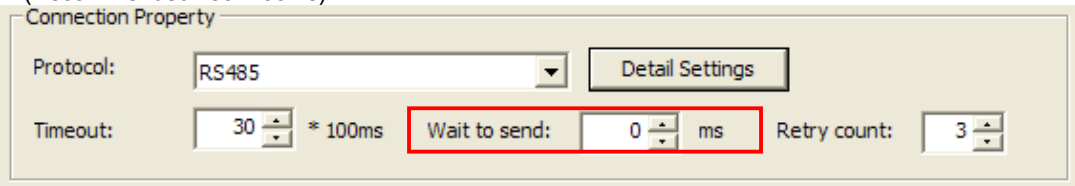

11.4 Available Device

The available devices for XGT Panel are as below and refer to the following table for address area for each machine.

Type	Address	Parameter	Remarks
Common Area	0000 - 04FF	Common area for all inverters	Displaying Hexadecimal number
	0500 - 09FF	Vector area	Displaying Hexadecimal number
Area by the kinds of machines	1000 - 1FFF	SV-IG parameter	Displaying Hexadecimal number
	2000 - 2FFF	SV-IS3 parameter	Displaying Hexadecimal number
	3000 - 3FFF	SV-IV parameter	Displaying Hexadecimal number
	4000 - 4FFF	SV-IH parameter	Displaying Hexadecimal number
	5000 - 5FFF	SV-IS5 parameter	Displaying Hexadecimal number
	6000 - 6FFF	SV-IG5 parameter	Displaying Hexadecimal number
	7000 - 7FFF	SV-IV5 parameter	Displaying Hexadecimal number
	8000 - 8FFF	SV-IC5 parameter	Displaying Hexadecimal number
	9000 - 9FFF	SV-IP5A parameter	Displaying Hexadecimal number
	A000 - AFFF	SV-IG5A parameter	Displaying Hexadecimal number

(1) LS SV-IG5A

Classification	Address area	Remarks
DRV	A100 - A1FF	Displaying Hexadecimal number
FU1	A200 – A2FF	Displaying Hexadecimal number
FU2	A300 – A3FF	Displaying Hexadecimal number
I/O	A400 - A4FF	Displaying Hexadecimal number

(2) LS SV-IP5

Classification	Address area	Remarks
MAK	9000 - 90FF	Displaying Hexadecimal number
DRV	9100 - 91FF	Displaying Hexadecimal number
FU1	9200 - 92FF	Displaying Hexadecimal number
FU2	9300 - 93FF	Displaying Hexadecimal number
I/O	9400 - 94FF	Displaying Hexadecimal number
EXT	9500 - 95FF	Displaying Hexadecimal number
COM	9600 - 96FF	Displaying Hexadecimal number
APP	9700 - 97FF	Displaying Hexadecimal number

(3) LS SV-IV5

Classification	Address area	Remarks
MAK	7000 - 70FF	Displaying Hexadecimal number
DIS	7100 - 71FF	Displaying Hexadecimal number
I/O	7200 - 72FF	Displaying Hexadecimal number
PAR	7300 - 73FF	Displaying Hexadecimal number
FUN	7400 - 74FF	Displaying Hexadecimal number
CON	7500 - 75FF	Displaying Hexadecimal number
EXT	7600 - 76FF	Displaying Hexadecimal number
USR	7700 - 77FF	Displaying Hexadecimal number
2nd	7800 - 78FF	Displaying Hexadecimal number
E/L	7900 - 79FF	Displaying Hexadecimal number

Notice

(1) Suggestions

► For the method to use device with details, refer to inverter manual.

► Use it within device area.

► Device range may be different depending on an inverter so refer to each inverter manual.

Chap.12 MODBUS RTU Protocol (Master)

MODBUS RTU Driver of LS Industrial Systems is available since V1.02 so if you use the previous version, please apply XP-Builder and XGT Panel software that are beyond V1.02 from our web-site.

12.1 MODBUS Protocol Outline

MODBUS protocol that is the specified open protocol used for server-client is operated by data reading/writing base don function code. The communication that adopts MODBUS protocol applies server-client function dealt with only one client.

Characteristics		RTU Mode
Signal system		8 bit binary code
The number of data per 1 character	Starting bit	1
	Data bit	8
	Parity bit	Even, Odd, None
	Stop bit	1 or 2
Error check		CRC (Cyclical Redundancy Check)
Start of frame		3.5 Characters no response time

12.1.1 Frame Structure

The frame structure of MODBUS RTU mode is as below.

Classification	Start	Station No.	Function code	Data	Error check	End
Size(byte)	Idle time	1	1	N	2	Idle time

(1) Characteristics of RTU mode
(a) It adopts hexadecimal number for communication.
(b) Starting character indicates unit No. and the end of frame indicates CRC error check for identifying the frame.
(c) It identifies start and end of the frame by adding idle time of 1 bit.
(d) It has at least 3.5 character time of interval between frames and when passing 1.5 character time, it is regarded as independent frame.

(2) Address Area
(a) It is composed of 1 byte.
(b) When using XGT Cnet I/F module, 0~31 can be applied for the unit No.
(c) 0 is used for client local number.
(d) Server includes its address to the response frame to show a client's response.

(3) Data Area
(a) It transmits data through hexadecimal number(Hex.) and data structure changes depending on each function code.
(b) It replies with response data when receiving normal frame.
(c) It replies with error code when receiving abnormal frame.

(4) Error Check Area
Through CRC checking method of 2 byte, it judges whether the frame is normal or not

(5) MODBUS Address Regulations
The address of data starts from 0 and it is equal to the value obtained by subtracting 1 from MODBUS memory. Namely, MODBUS address 2 is the same as address 1 of data.

12.1.2 Displaying Data and Address

In terms of displaying data and address of MODBUS protocol, the main characteristics are as below.

(1) It basically adopts hexadecimal number(Hex.).
(2) The meaning of each function code is as below.

Code(Hex)	Used for	Using area	Address	Max. Response data
01	Reading individual/continuous bit	Bit output	0XXXX	2000Bit
02	Reading individual/continuous bit	Bit input	1XXXX	2000Bit
03	Reading individual/continuous word	Word output	4XXXX	125Word
04	Reading individual/continuous word	Word Input	3XXXX	125Word
05	Writing individual bit	Bit output	0XXXX	1Bit
06	Writing individual word	Word output	4XXXX	1Word
0F	Writing continuous bit	Bit output	0XXXX	1968Bit
10	Writing continuous word	Word output	4XXXX	120Word

12.2 Wiring Diagram

The wiring method of XGT Panel and PLC connected through MODBUS communication may be different depending on the manufacturer. For proper wiring, refer to each PLC's manual.
The description on wiring of LS Industrial Systems' XGT PLC will be provided hereupon.

12.2.1 RS-232C

When connecting MODBUS communication through RS-232C mode, the wiring method is the same as general wiring method for RS-232C.

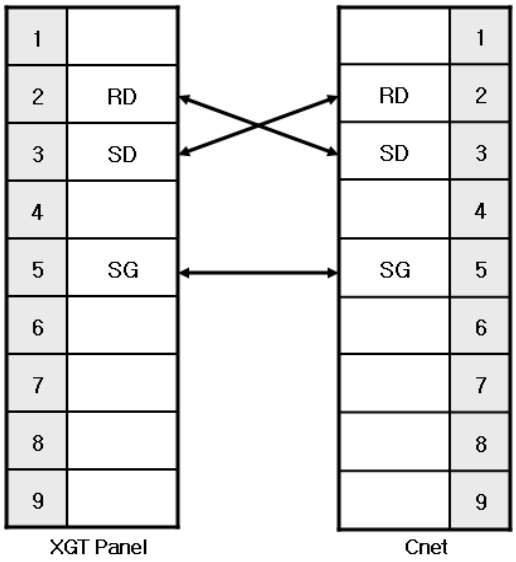

12.2.2 RS-422

When connecting MODBUS communication through RS-422 mode, the wiring method is the same as general wiring method for RS-422.

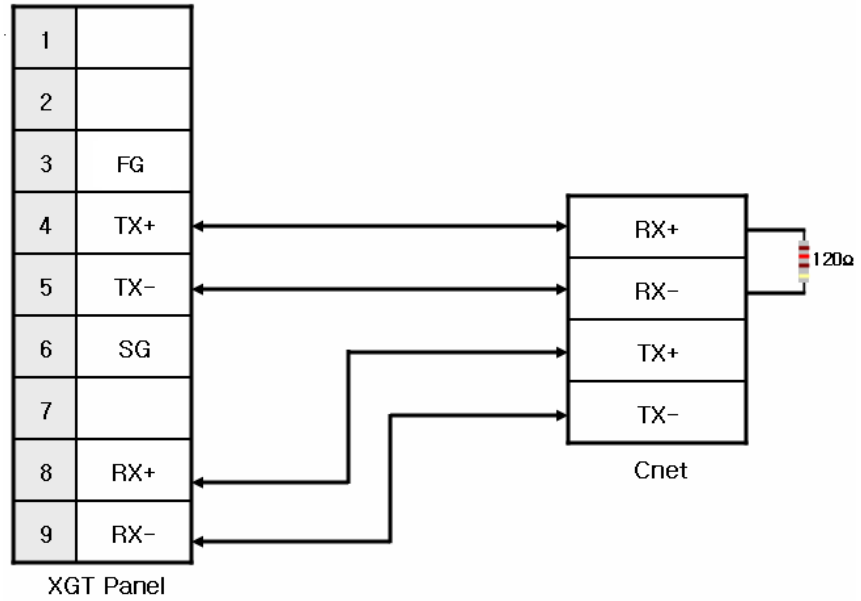

12.2.3 RS-485

When connecting MODBUS communication through RS-485 mode, the wiring method is the same as general wiring method for RS-485.

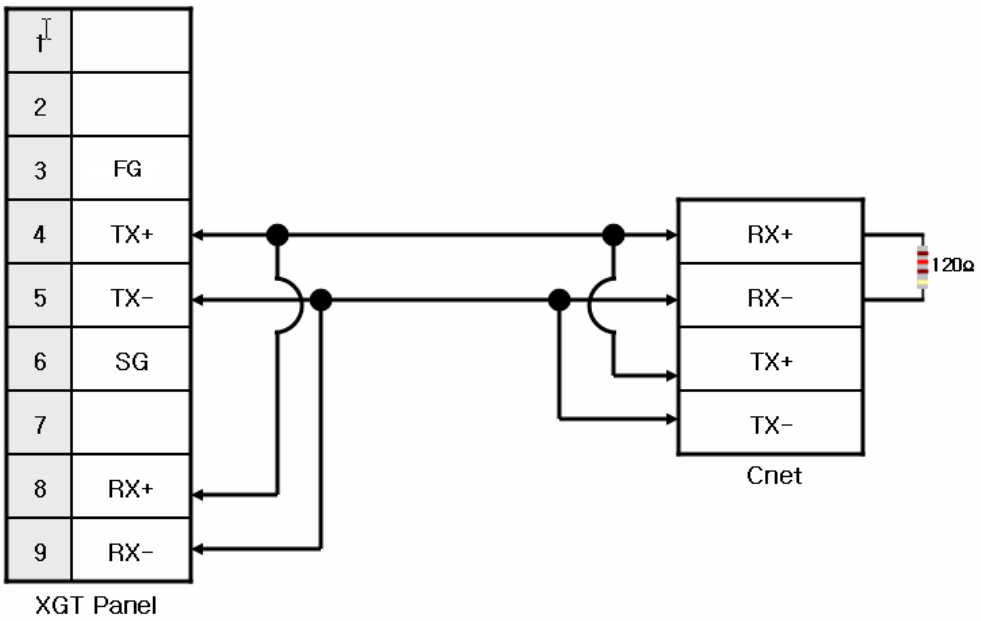

Notice

(1) Suggestions
► The array of connector and pin may be different depending on the PLC type.
► Check the end switch of XGT Panel. It is basically set as terminator type.
► **A shielded wire is recommended for stable communication.** For shield wiring, refer to the Chap.2.

12.3 Communication Setting

XGT Panel can be connected through various kinds of devices that adopt MODBUS(RTU) communication with RS-232C, RS-422/485 mode. Setting methods are different depending on the manufacturer so for more details, refer to each device manual.
For example, description on XGK PLC will provided hereupon.

12.3.1 The example of setting PLC(XGK)

The communication for PLC(XGK) is set at XG-PD.

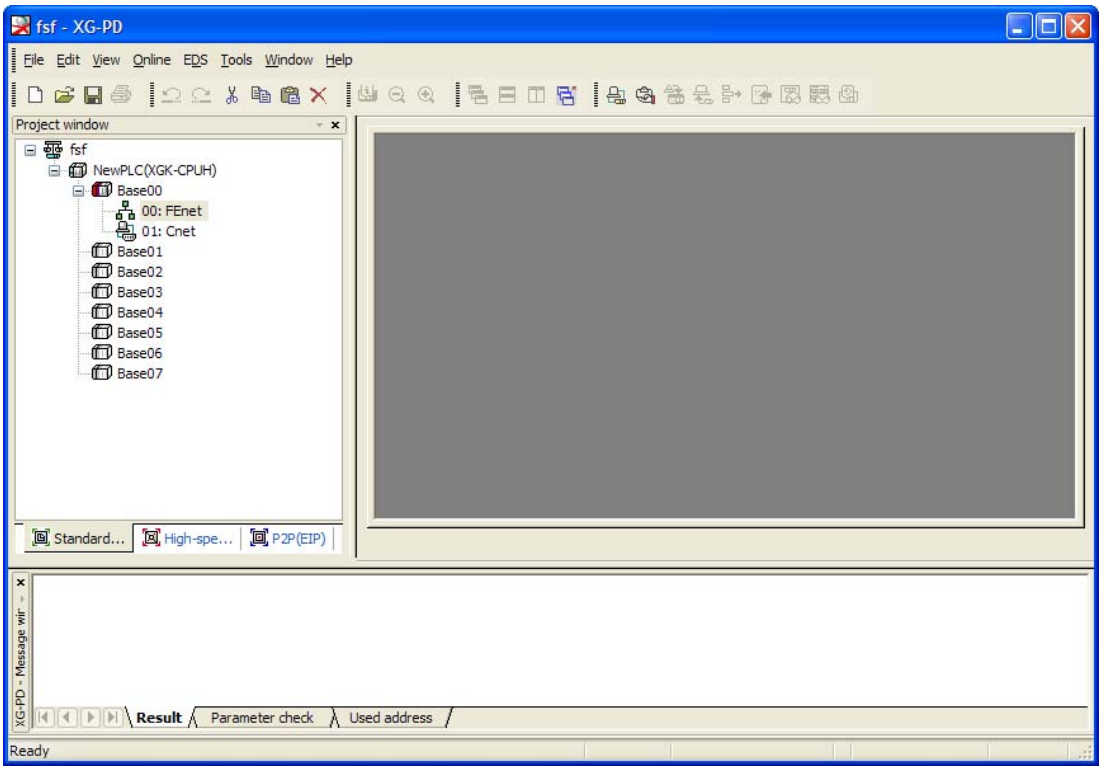

(1) Connection Setting
Select Online->Connection Setting.
After setting connection options for user environment, click Connection.
(2) Reading I/O Data
Select Online->Reading I/O Data to interpret the information of module embedded in the current base.

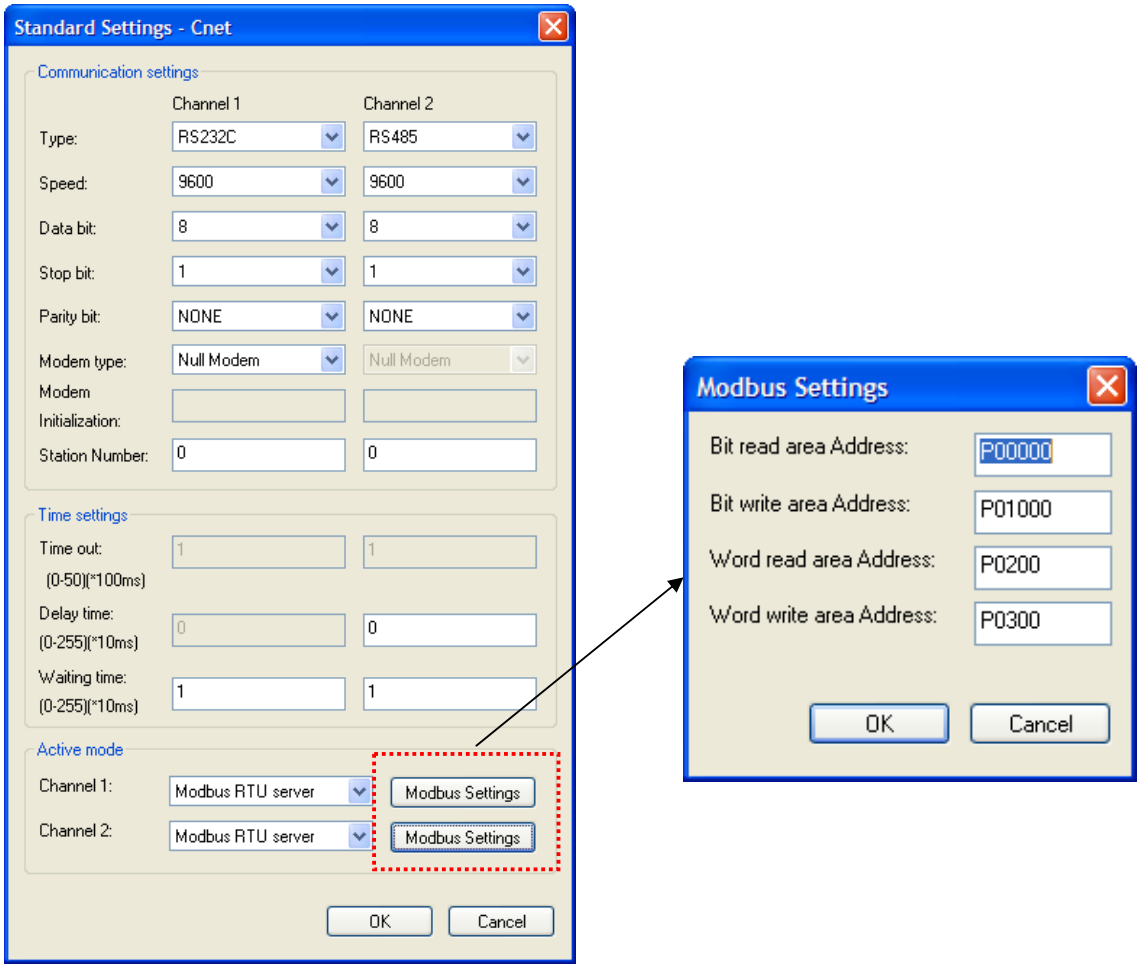

(3) Double-click the related Cnet I/F module to execute basic setting screen and establish communication mode, communication speed, modem type, data bit, stop bit, unit No. of connection setting menu.

(4) Select RTU server for operation mode.

(a) If you select MODBUS RTU server for operation mode, executing MODBUS is active.

(5) Setting MODBUS

(a) Starting address of bit reading area : Indicates the starting address of bit reading area with 5 digits.
The former 4 digits indicate word value and the remaining 1 digit means bit value.
Ex.) In the case of M00000 : The 0th bit of 0th word of M device is set as starting address of bit reading area.

(b) Starting address of bit writing area : Indicates the starting address of bit writing area with 5 digits.
The former 4 digits indicate word value and the remaining 1 digit means bit value.
Ex.) In the case of M00100: The 0th bit of 10th word of M device area is set as starting address of bit reading area.

(c) Starting address of word reading area: Indicates the starting address of word reading area with 4 digits.
Ex.) In the case of M00200: The 200th word of M device area is set as starting address of word reading area.

(d) Starting address of word writing area: Indicates the starting address of word writing area with 4 digits.
Ex.) In the case of M00300: The 300th word of M device area is set as starting address of word writing area.

(6) Writing Parameter

(a)Click Online-Writing parameter.

(b)After clicking the module whose basic setting is completed at basic setting, click OK button.

(c)After clicking OK button, complete Parameter Writing and reset the module individually.

(7) Checking operation

(a) Click Online-System Diagnosis

(b) After clicking the related module, press the right mouse button for frame monitoring and status by services to check whether communication is normal or not.

12.3.2 The example of setting XGT Panel

You can set the communication for XGT Panel through XP-Builder.

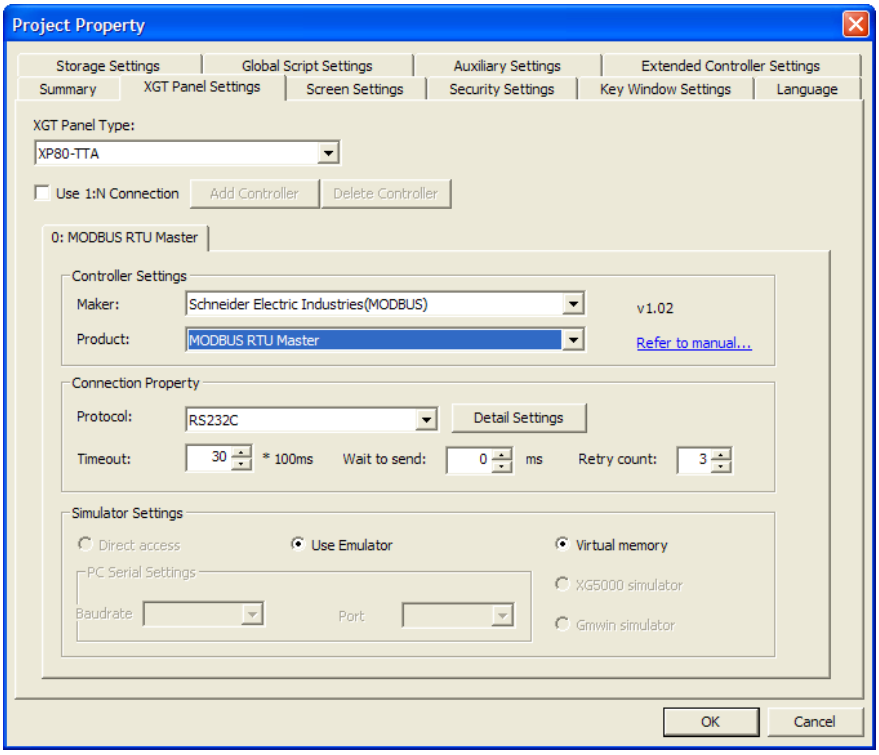

(1) Setting controller

Select Schneider Electric Industry for the manufacturer and for the item, select MODBUS RTU Master.

(2) Connection Property

Select the proper connection type for your own working environment.

(3) Setting detailed connection option

Select the proper transmission speed, data bit, parity, stop bit for your own working environment.

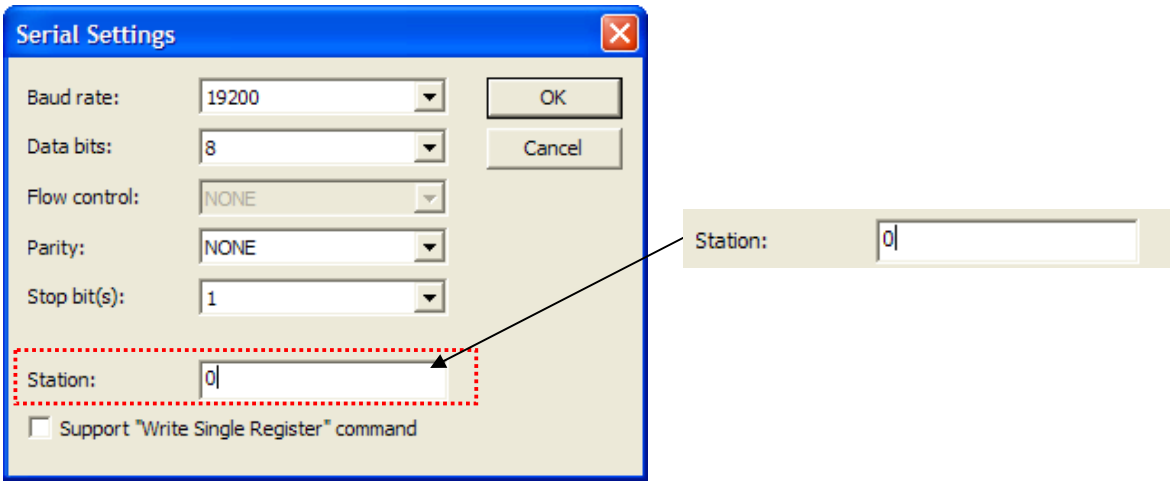

The unit No. is the opposite device's No. that is under MODBUS communication. If you have wrong unit No., time out will be displayed at the upper place of XGT Panel screen. Check the unit No. again.
If there is no menu to set unit No. at PLC or PLC communication module, set the unit No. as '0' at XP-Builder.

(4) Download established communication details to XGT Panel.

Notice

(1) Suggestions
► In the case of communication error, check if the parameters including transmission speed and data bit are correct.
► If time out is shown at the upper place of a screen, check the unit No.

12.4 Available Device

The available device for XGT Panel is as below.

Device	Area allowed for connection			Remarks
	Available range	Reading(function code)	Writing(function code)	
Output contacts	0 - 65535	Available (01)	Available (05)	-
Input contacts	0 - 65535	Available (02)	Available (05)	-
Output register	0 - 65535	Available (03)	Available (06,16)	-
Input register	0 - 65535	Available (04)	Available (06,16)	-

Notice

(1) Suggestions
► For the details on device, refer to MODBUS Protocol manual of Schneider.
► Use it within device area.
► The maximum device value may be different depending on PLC so refer to the PLC manual to be connected.

Chap.13 MODBUS TCP/IP Protocol (Master)

MODBUS RTU Series PLC Driver of LS Industrial Systems is available since V1.04 so if you use the previous version, please apply XP-Builder and XGT Panel software that are beyond V1.04 from our web-site.

13.1 PLC allowed to be connected

XGT Panel can be communicated with the device that adopts MODBUS TCP/IP protocol. MODBUS protocol that is the specified open protocol used for server-client is operated by data reading/writing base don function code. The communication that adopts MODBUS protocol applies server-client function dealt with only one client.

13.2 Wiring Diagram

Ethernet cables can be divided into 2 types depending on connection mode. For RAN communication connected network device such as hub, a direct cable is applied (hub-node connection). For connecting devices without RAN, a cross cable is used.
For more details, refer to Chap.2 Communication Outline and Composition.

A direct cable can be arranged as below.

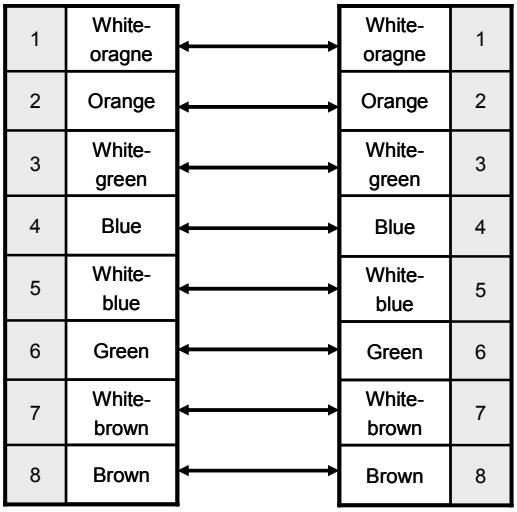

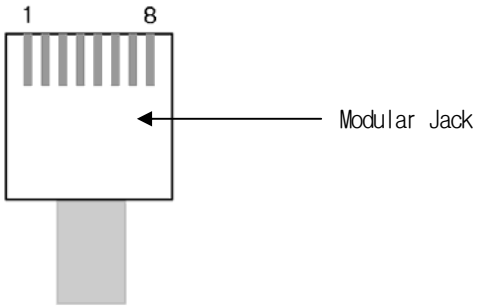

White-yellow', 'White-green', 'White-blue', 'White-brown' from above figure is indicated on the coating of the cable.
For example, 'white-blue' has blue stripes on white coating.

A cross cable can be arranged as below.

1	White-orange	↔	White-green	1
2	Orange	↔	Green	2
3	White-green	↔	White-orange	3
4	Blue	↔	Blue	4
5	White-blue	↔	White-blue	5
6	Green	↔	Orange	6
7	White-brown	↔	White-brown	7
8	Brown	↔	Brown	8

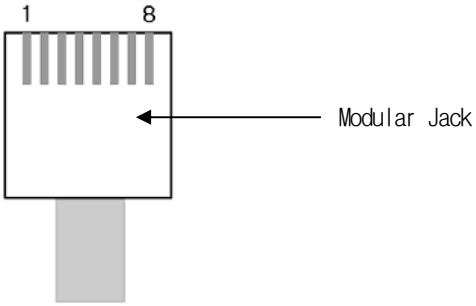

Notice

(1) Suggestions
- ► Apply the proper connection type.
- ► Make cables with the exclusive module tool to avoid bad connection.
- ► If the lock of modular jack is broken or damaged, it is not fixed to RJ45 connector(Ethernet connector) so bad connection may be caused.
- ► UTP cable has a single line so if you fold or shake it excessively, its properties may be worsened.
- ► When arranging cables, using a plug cover is recommended.

13.3 Communication Setting

XGT Panel can be connected through various kinds of devices that adopt MODBUS(TCP/IP) communication MODBUS protocol. Setting methods are different depending on the manufacturer so for more details, refer to each device manual.
For example, description on XGK PLC will provided hereupon.

13.3.1 The example to set PLC(XGK)

The communication parameter of PLC(XGK) is set at XG-PD.

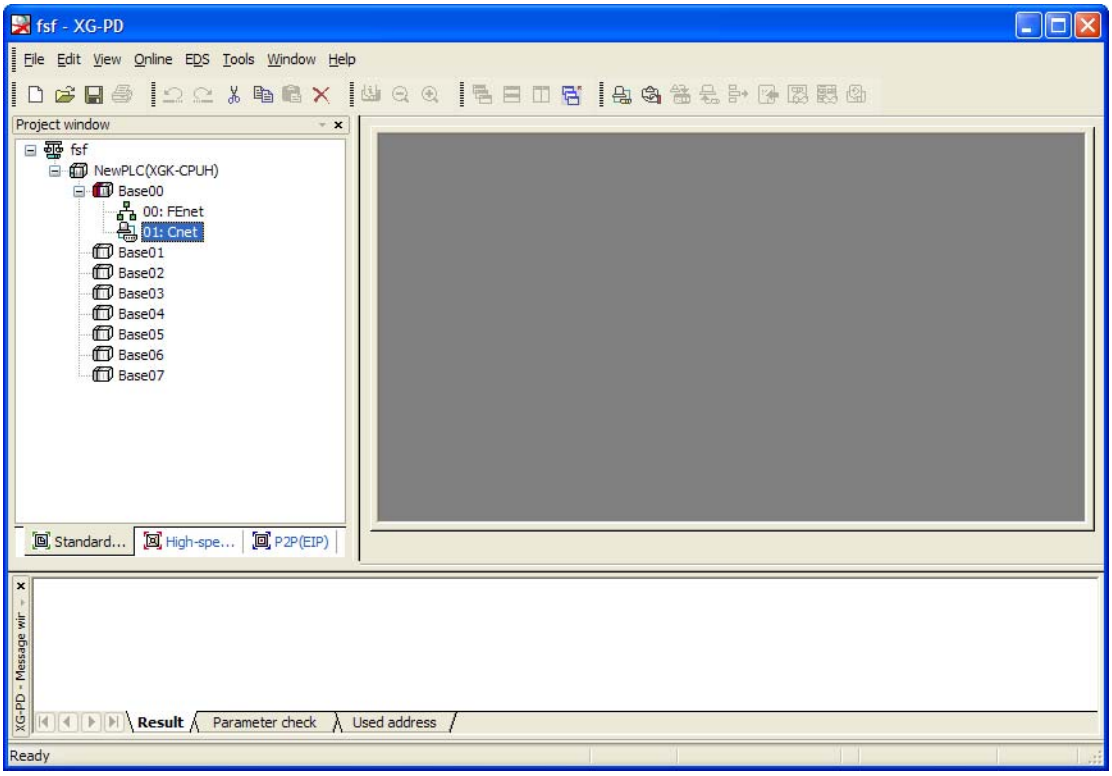

(1) Connection Setting
Select Online->Connection Setting.
After setting connection options for user environment, click Connection.

(2)Reading I/O Data
Select Online->Reading I/O Data to read the information of module embedded in the current base.

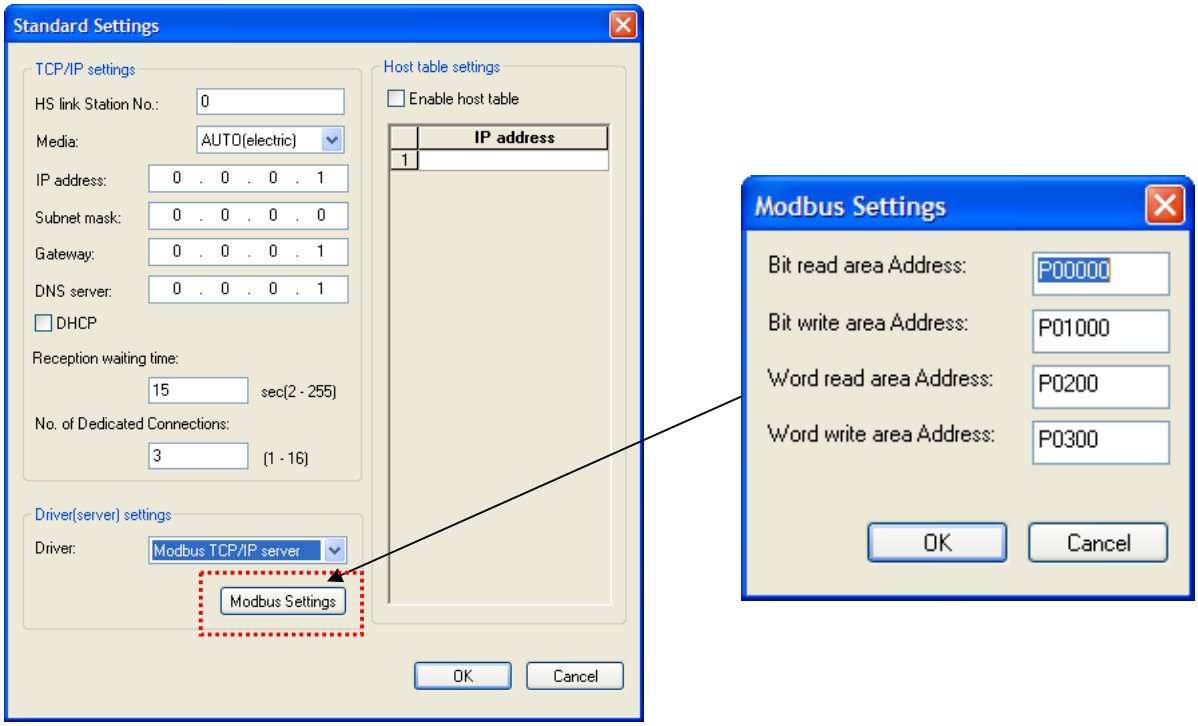

(3) -click the related FEnet I/F module to execute basic setting screen and establish IP address, subnet mask, gateway, DNS Server at connection setting menu and select TCP/IP Server for operation mode.

(a) If MODBUS TCP/IP Server is selected for operation mode, MODBUS setting is active.

(4) MODBUS Setting

(a) Starting address of bit reading area : Indicates the starting address of bit reading area with 5 digits.
The former 4 digits indicate word value and the remaining 1 digit means bit value.
Ex.) In the case of M00000 : The 0th bit of 0th word of M device is set as starting address of bit reading area.

(b) Starting address of bit writing area : Indicates the starting address of bit writing area with 5 digits.
The former 4 digits indicate word value and the remaining 1 digit means bit value.
Ex.) In the case of M00100: The 0th bit of 10th word of M device area is set as starting address of bit reading area.

(c) Starting address of word reading area: Indicates the starting address of word reading area with 4 digits.
Ex.) In the case of M00200: The 200th word of M device area is set as starting address of word reading area.

(d) Starting address of word writing area: Indicates the starting address of word writing area with 4 digits.
Ex.) In the case of M00300: The 300th word of M device area is set as starting address of word writing area.

(5) Writing Parameter

(a)Click Online-Writing parameter.

(b)After clicking the module whose basic setting is completed at basic setting, click OK button.

(c)After clicking OK button, complete Parameter Writing and reset the module individually.

(6) Checking operation

(a) Click Online-System Diagnosis

(b) After clicking the related module, press the right mouse button for frame monitoring and status by services to check whether communication is normal or not.

13.3.2 The example to set XGT Panel

You can set the communication for XGT Panel through XP-Builder.

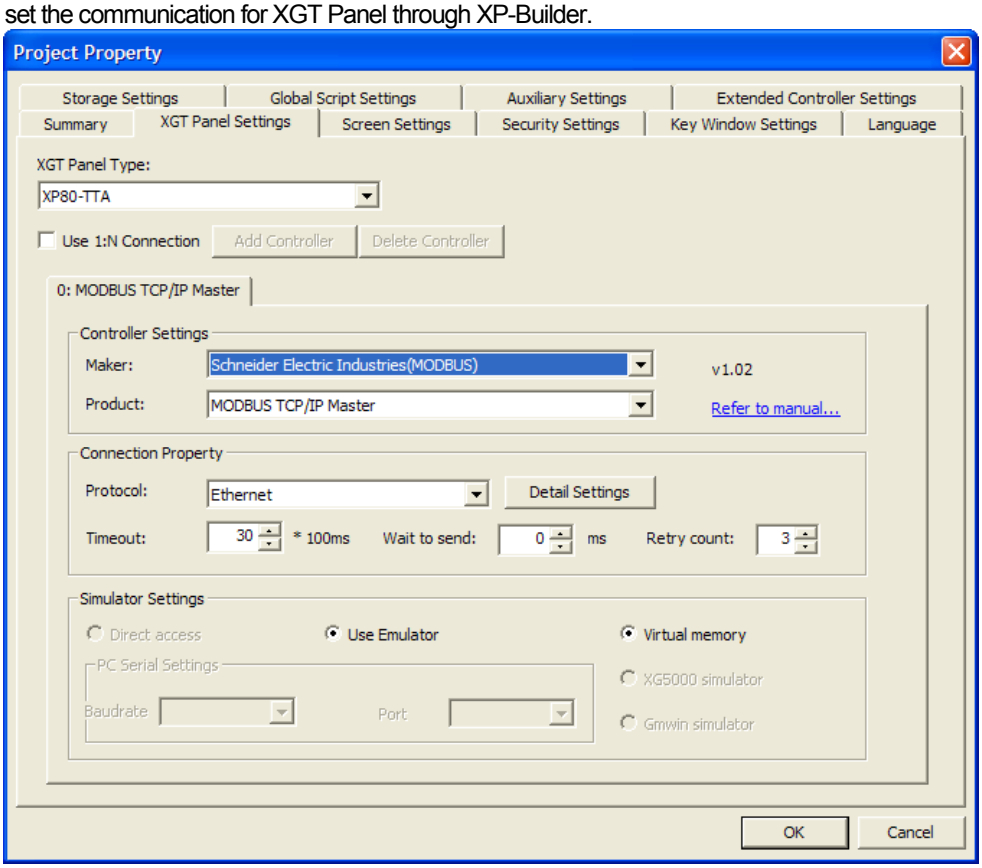

(1) Setting controller

Select Schneider Electric Industry for the manufacturer and for the item, select MODBUS TCP/IP Master.

(2) Connection Property

Select Ethernet for connection mode.

(3) Setting detailed connection option

Select the proper IP and port to be connected for your own working environment.

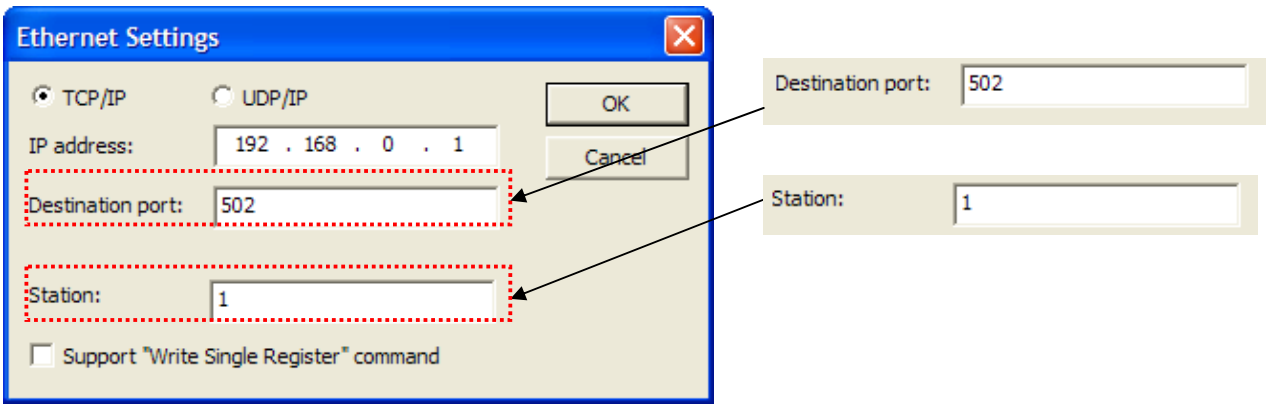

The basic No. of the port for MODBUS TCP/IP Master is 502. The unit No. is the opposite device's No. that is under MODBUS communication. If you have wrong unit No., time out will be displayed at the upper place of XGT Panel screen. Check the unit No. again.

(4) Download established communication details to XGT Panel.

Notice

(1) Suggestions
- ► In the case of communication error, check if the parameters including transmission speed and data bit are correct.
- ► If time out is shown at the upper place of a screen, check the unit No.

13.4 Available Device

The available device for XGT Panel is as below.

Device	Area allowed for connection			Remarks
	Available range	Reading(function code)	Writing(function code)	
Output contacts	0 – 1~65536	Available (01)	Available (05)	-
Input contacts	0 – 1~65536	Available (02)	Available (05)	-
Output register	4 – 1~65536	Available (03)	Available (06,16)	-
Input register	4 – 1~65536	Available (04)	Available (06,16)	-

Notice

(1) Suggestions
- ► For the details on device, refer to MODBUS Protocol manual of Schneider.
- ► Use it within device area.
- ► The maximum device value may be different depending on PLC so refer to the PLC manual to be connected.

Chap. 14 MITSUBISHI: MELSEC-A PLC

MELSEC-A Series PLC Driver of Mitsubishi is available since V1.02 so if you use the previous version, please apply XP-Builder and XGT Panel software that are beyond V1.02 from our web-site.

14.1 PLC List

XGT Panel can be connected to MELSEC-A PLC as below.

PLC Type	CPU Module	Connection	Communication	Connection module	Remarks
MELSEC-AnA	A2ACPU A2ACPU-S1 A3ACPU A2UCPU A2UCPU-S1 A3UCPU A4UCPU	Link type	RS-232C	AJ71C24-S6 AJ71C24-S8 AJ71UC24	Cnet
		Link type	RS-422/485	AJ71C24-S6 AJ71C24-S8 AJ71UC24	Cnet
	A2USCPU A2USHCPU-S1	Link type	RS-232C	A1SJ71C24-R2 A1SJ71UC24-R2	Cnet
		Link type	RS-422/485	A1SJ71C24-R4 A1SJ71UC24-R4	Cnet
MELSEC-AnN	A1NCPU A2NCPU A2NCPU-S1 A3NCPU	Link type	RS-232C	AJ71C24 AJ71C24-S3 AJ71C24-S6 AJ71C24-S8 AJ71U24	Cnet
		Link type	RS-422/485	AJ71C24 AJ71C24-S3 AJ71C24-S6 AJ71C24-S8 AJ71U24	Cnet
	A1SCPU A1SJCPU A1SJHCPU A1SHCPU A2SHCPU	Link type	RS-232C	A1SJ71C24-R2 A1SJ71UC24-R2 A1SJ71C24-R4 A1SJ71UC24-R4	Cnet
		Link type	RS-422/485	A1SJ71C24-R2 A1SJ71UC24-R2 A1SJ71C24-R4 A1SJ71UC24-R4	Cnet
	A0J2CPU A0J2HCPU	Link type	RS-422/485	A0J2-C214-S1	Cnet

Notice

(1) Non-available PLC
► CPU module direct connection(loader) is not available.
(2) Term description
► Link: Indicates the communication with PLC module.

14.2 Wiring Diagram

14.2.1 Link type: Cnet

Cnet can be divided into for RS-232C and RS-422/485.

The Cnet module of Mitsubishi MELSEC-A series that provides RS-232C has two types of connectors.
First, the wiring method for 9 pins connector is as below.

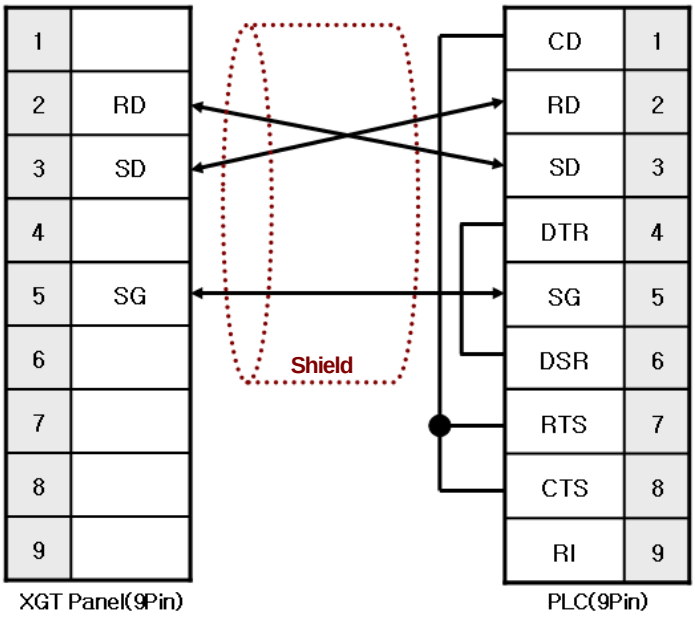

Second, the wiring method for 20 Pins connector is as below.

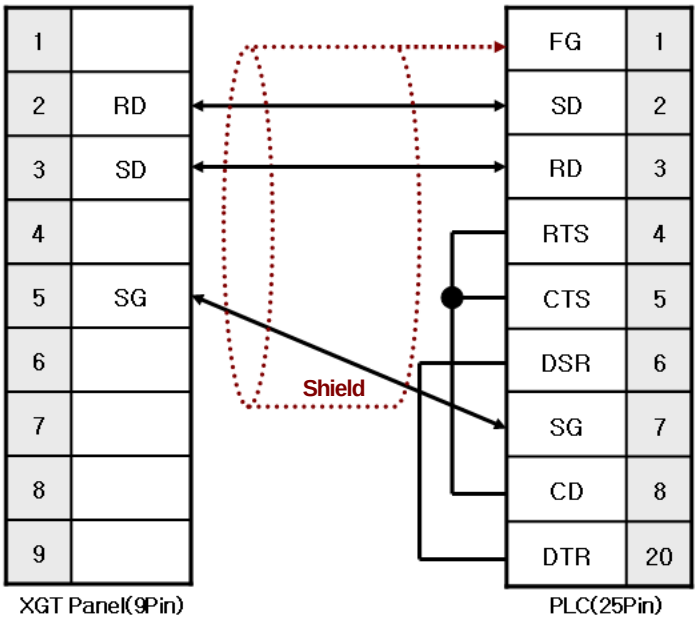

Notice

(1) Suggestions
- ► MELSEC-A Cnet(RS-232C) adopts flow control so if the above wiring is not done, communication is not available.
- ► **A shielded wire is recommended for stable communication.** For shield wiring, refer to the Chap.2.

The wiring method for RS-422/485 is as below.
The following is wiring for RS-422 and Mitsubishi MELSEC-A is composed of 7 pins terminal blocks.

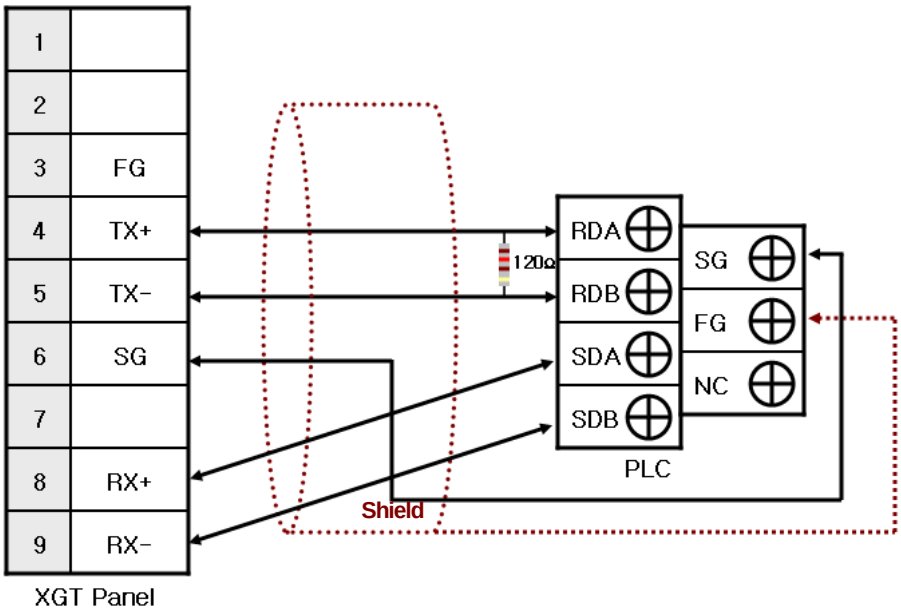

The wiring for RS-485 is as below.

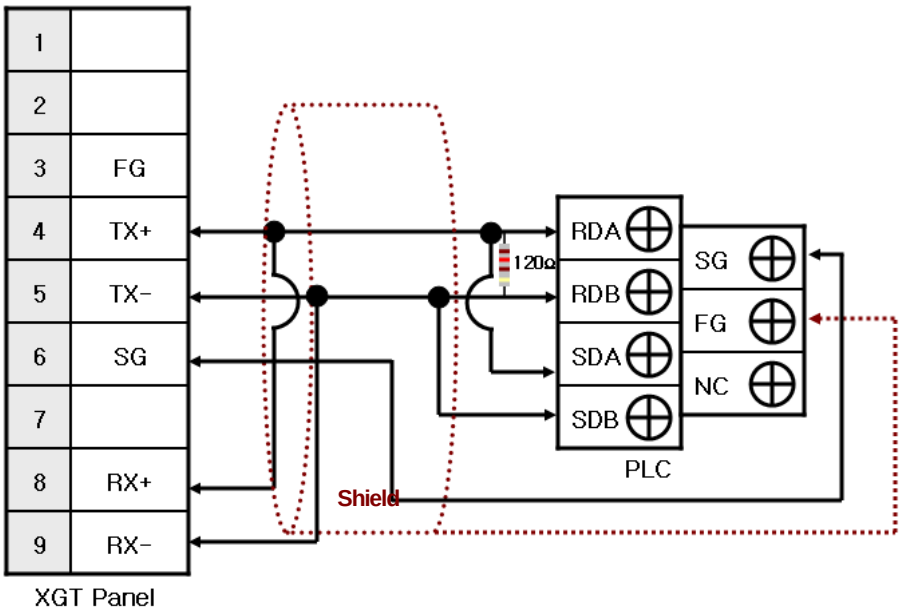

Notice

(1) Suggestions

- ► The array of connector and pin may be different depending on the PLC type.
- ► Check the end switch of XGT Panel. It is basically set as terminator type.
- ► XGT Panel has two SG pins so you can use either one.
- ► **A shielded wire is recommended for stable communication.** For shield wiring, refer to the Chap.2.

14.3 Communication Setting

14.3.1 Link type: Cnet

Cnet communication parameter of PLC is set with the switch of Cnet module. Setting methods are different depending on the type of device, for more details, refer to MITSUBISHI's communication manual.
The description on setting for typical kinds of devices(Cnet module) is provided hereupon.

(1) AJ71UC24
The outline of module is as below.

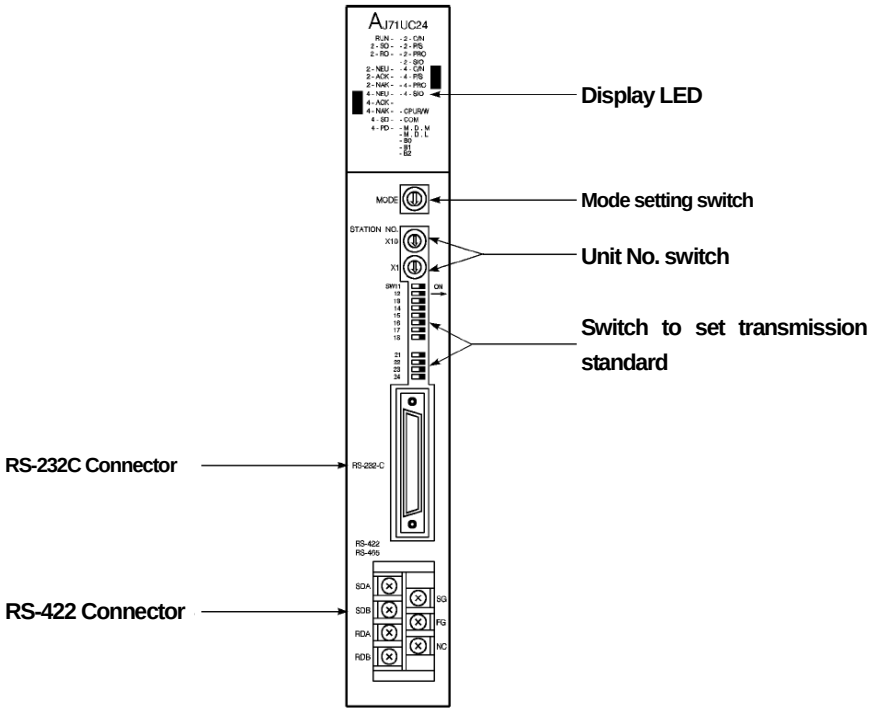

First of all, arrange mode setting switch.

RS-232C	RS-422/485
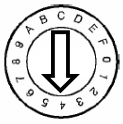 Setting as Exclusive communication mode 4 <u>**with No. 4 switch**</u>	Setting as Exclusive communication mode 4 <u>**with No. 4 switch**</u>

Set communication No. with a unit number switch.

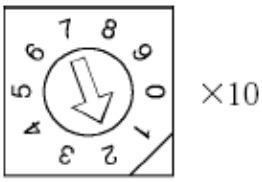

Switch to set tens(10) digit number
(Ex.) As shown at the picture, the arrow points to 2, tens(10) digit of a unit number is 20

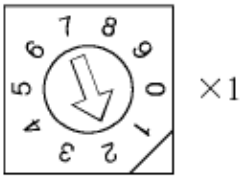

Switch to set ones(1) digit number
(Ex.) As shown at the picture, the arrow points to 2, ones(1) digit of a unit number is 2.

Then, the unit number set by the two switches is 22.

There is communication setting switch to fix transmission standard such as communication type, communication speed.

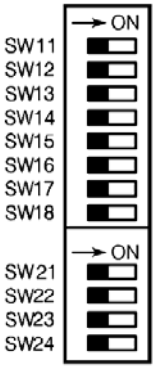

Switch No.	Setting items	Setting descriptions	
		On	Off
SW11	Communication type	RS-422/485	RS-232C
SW12	Data bit	8bit	7bit
SW13~SW15	Communication speed(bps)	*Procedure: SW13, SW14, SW15 19200: Off, On, On 9600: On, Off, On (XGT Panel does not allow the communication speed of less than 9600bps.)	
SW16	Whether using parity bit or not	Used	Not used
SW17	Parity bit	Even Number	Odd Number
SW18	Stop bit	2bit	1bit
SW21	Setting checksum	Used	Not used
SW22	Revision during run	Available	N/A
SW23	Selecting Computer link/Multi drop link	Computer link	Multi-drop
SW24	Setting Master/local	Master	Local

To communication with XGT Panel normally, you need to set the below switches among the above.

Switch No.	Setting items	Setting descriptions	Setting descriptions
SW21	Setting checksum	Used	On
SW23	Selecting Computer link/Multi drop link	Computer link	On
SW24	Setting Master/local	Local	Off

If you do not set the above, communication does not work properly so time out or error code may be shown at the upper place of XGT Panel. Error code is transmitted from MITSUBISHI PLC and may be different depending on communication muddle type.

In the meanwhile, when you set RS-422 or RS-485 communication, establish the PC No. as 255 at XP-Builder.
(XP-Builder menu->Common->Project Property->Device Setting)

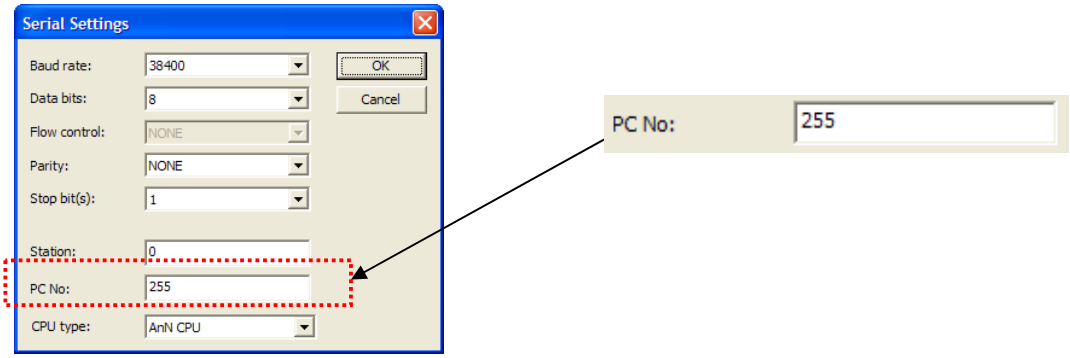

If you have wrong PC No., error code(0x0010) will be shown at the upper place of a screen. Error code is transmitted from MITSUBISHI PLC and may be different depending on communication muddle type.

(2) A1SJ71UC24-R2, A1SJ71C24-R2

The module provides RS-232C only and it has no switch to set a unit number.
You can set the mode switch as below.

RS-232C
Setting as Exclusive communication mode 4 **with No. 4 switch**

There is communication setting switch to fix transmission standard such as communication type, communication speed.

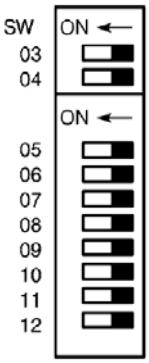

Switch No.	Setting items	Setting descriptions	
		On	Off
SW03	Not used	-	
SW04	Revision during run	Available	N/A
SW05~SW07	Communication speed(bps)	*Procedure: SW05, SW06, SW07 19200: Off, On, On 9600: On, Off, On (XGT Panel does not allow the communication speed of less than 9600bps.)	
SW08	Data bit	8 Bit	7 Bit
SW09	Whether using parity bit or not	Used	Not used
SW10	Parity bit	Even Number	Odd Number
SW11	Stop bit	2 Bit	1 Bit
SW12	Setting checksum	Used	Not used

To communication with XGT Panel normally, you need to set the below switches among the above.

Switch No.	Setting items	Setting descriptions	Setting descriptions
SW12	Setting checksum	Used	On

If you do not set the above, communication does not work properly so time out or error code may be shown at the upper place of XGT Panel. Error code is transmitted from MITSUBISHI PLC and may be different depending on communication muddle type.

(3) A1SJ71UC24-R4, A1SJ71C24-R4

The module provides RS-422/485 only and it has no switch to set a unit number.
You can set the mode switch as below.

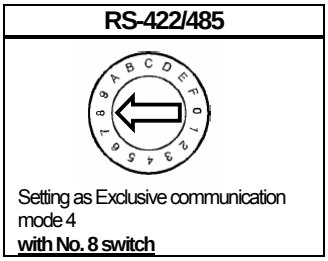

Set communication No. with a unit number switch.

Switch to set tens(10) digit number
(Ex.) As shown at the picture, the arrow points to 2, tens(10) digit of a unit number is 20

Switch to set ones(1) digit number
(Ex.) As shown at the picture, the arrow points to 2, ones(1) digit of a unit number is 2.
Then, the unit number set by the two switches is 22.

There is communication setting switch to fix transmission standard such as communication type, communication speed.

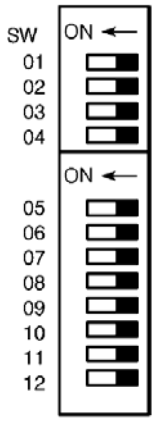

Switch No.	Setting items	Setting descriptions	
		On	Off
SW01	Setting Master/Local	Master	Local
SW02	Selecting computer link/multi-drop link	Computer link	Multi-drop link
SW03	Not used	-	
SW04	Revision during run	Available	N/A
SW05~SW07	Communication speed(bps)	*Procedure: SW05, SW06, SW07 19200: Off, On, On 9600: On, Off, On (XGT Panel does not allow the communication speed of less than 9600bps.)	
SW08	Data bit	8 Bit	7 Bit
SW09	Whether using parity bit or not	Used	Not used
SW10	Parity bit	Even Number	Odd Number
SW11	Stop bit	2 Bit	1 Bit
SW12	Setting checksum	Used	Not used

To communication with XGT Panel normally, you need to set the below switches among the above.

Switch No.	Setting items	Setting descriptions	Setting descriptions
SW01	Setting Master/local	Local	Off
SW02	Selecting Computer link/Multi drop link	Computer link	On
SW12	Setting checksum	Used	On

If you do not set the above, communication does not work properly so time out or error code may be shown at the upper place of XGT Panel. Error code is transmitted from MITSUBISHI PLC and may be different depending on communication muddle type.

In the meanwhile, when you set RS-422 or RS-485 communication, establish the PC No. as 255 at XP-Builder.
(XP-Builder menu->Common->Project Property->Device Setting)

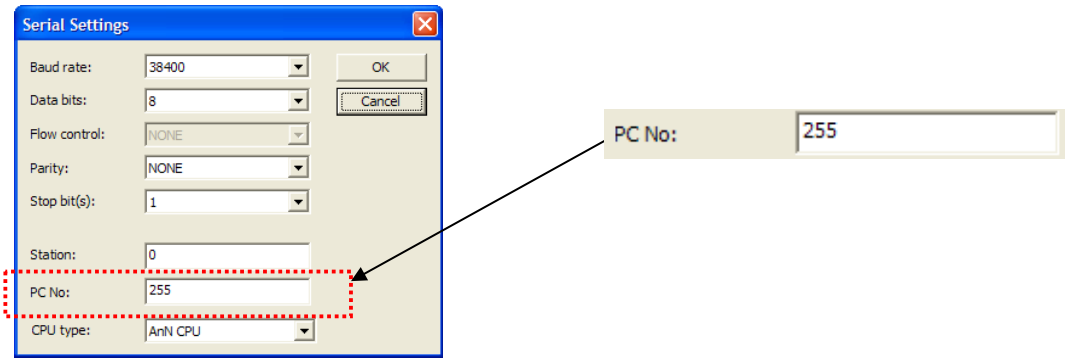

If you have wrong PC No., error code(0x0010) will be shown at the upper place of a screen. Error code is transmitted from MITSUBISHI PLC and may be different depending on communication muddle type.

Notice

(1) Checking communication status
- ► There are SD, RD LED for Cnet module. If you have a normal communication, you can see that LED flashes fast.

(2) Suggestions to set PLC
- ► For installation, make sure to refer to MITSUBISHI manual.
- ► Especially, be noted that setting methods are different depending on the device type.

(3) Suggestions to set XP-Builder
- ► When creating project or setting communication, you need to refer to the below.

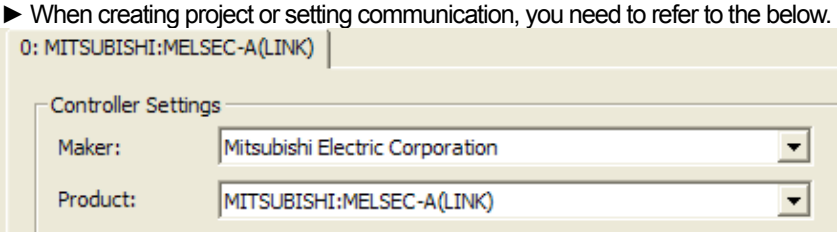

- ► When using RS-422/485 as 1:N, set transmission waiting time flexibly depending on communication structure(Recommended : 50~100ms)

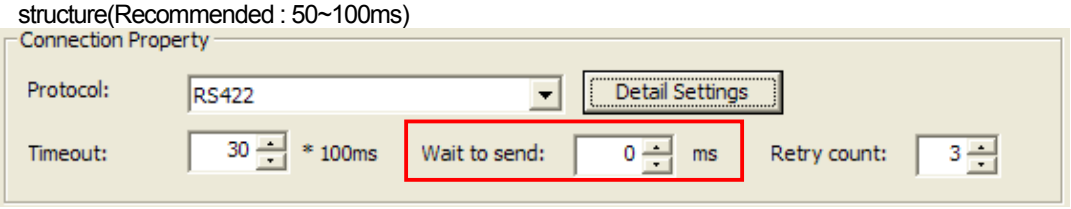

14.4 Available Device

The available devices for XGT Panel are as below.

(1) MELSEC-AnA Series

Area	Size	Bit Contacts	Word data	Remarks
X	8192contacts	X0000 ~ X1FFF	X0000 ~ X1FF0	Hexadecimal Number
Y	8192contacts	Y0000 ~ Y1FFF	Y0000 ~ Y1FF0	Hexadecimal Number
M	8192contacts	M0000 ~ M8191	M0000 ~ M8176	Decimal Number
	256contacts	M9000 ~ M9255	M9000 ~ M9240	Decimal Number
L	8192contacts	L0000 ~ L8191	L0000 ~ L8196	Decimal Number
F	2048contacts	F0000 ~ F2047	F0000 ~ F2032	Decimal Number
B	8192contacts	B0000 ~ B1FFF	B0000 ~ B1FF0	Hexadecimal Number
TC	2048contacts	TC00000 ~ TC2047	Word is not available	Decimal Number
TS	2048contacts	TC00000 ~ TC2047	Word is not available	Decimal Number
CS	1024contacts	CS0000 ~ CS1023	Word is not available	Decimal Number
CC	1024contacts	CC0000 ~ CC1023	Word is not available	Decimal Number
S	8192contacts	S0000 ~ S8191	S0000 ~ S8176	Decimal Number
D	8192words	-	D0000 ~ D8191	Decimal Number
	256words	-	D9000 ~ D9255	Decimal Number
W	8192words	-	W0000 ~ W1FFF	Hexadecimal Number
TN	2048words	-	TN0000 ~ TN2047	Decimal Number
CN	1024words	-	CN0000 ~ CN1023	Decimal Number
R	8192words	-	R0000 ~ R8191	Decimal Number

(2) MELSEC-AnN Series

Area	Size	Bit Contacts	Word data	Remarks
X	2048contacts	X000 ~ X7FF	X0000 ~ X7F0	Hexadecimal Number
Y	2048contacts	Y000 ~ Y7FF	Y0000 ~ Y7F0	Hexadecimal Number
M	2048contacts	M0000 ~ M2047	M0000 ~ M2032	Decimal Number
	256contacts	M9000 ~ M9255	M9000 ~ M9240	Decimal Number
L	2048contacts	L0000 ~ L2047	L0000 ~ L2032	Decimal Number
F	255contacts	F000 ~ F255	F000 ~ F240	Decimal Number
B	1024contacts	B000 ~ B3FF	B000 ~ B3F0	Hexadecimal Number
TC	256contacts	TC000 ~ TC255	Word is not available	Decimal Number
TS	256contacts	TC000 ~ TC255	Word is not available	Decimal Number
CS	256contacts	CS000 ~ CS255	Word is not available	Decimal Number
CC	256contacts	CC000 ~ CC255	Word is not available	Decimal Number
S	2048contacts	S0000 ~ S2047	S0000 ~ S2032	Decimal Number
D	1024words	-	D0000 ~ D1023	Decimal Number
	256words	-	D9000 ~ D9255	Decimal Number
W	1024words	-	W000 ~ W3FF	Hexadecimal Number
TN	256words	-	TN000 ~ TN256	Decimal Number
CN	256words	-	CN000 ~ CN256	Decimal Number
R	8192words	-	R0000 ~ R8191	Decimal Number

Notice

(1) Suggestions

► For the details on device, refer to XP-Builder manual.

► Use it within device area.

► The range of device may be different depending on CPU module so refer to each CPU module manual.

► When a wrong blank area set at between M and D device address, PLC sends NAK signal so be attentive to use M and D device areas.

► Among M and D devices, more than 9000 belongs to system area so be attentive to writing mode.
For example, when M9002 bit is written as 1, link communication may stop.

► Using input/output device can affect communication module.
For example, when using Y32 word after installing module at No.0 link slot, link communication may stop.

Chap.15 OMRON: CS/CJ PLC

15.1 PLC List

XGT Panel can be connected to OMRON's CS/CJ PLC.

PLC Type	CPU Module	Connection mode	Communication mode	Connection Module	Remarks
CS1	CS1H-CPU67/66/65/64/63 CS1G-CPU45/44/43/42 CS1G-CPU45H/44H/43H/42H CS1H-CPU67H/66H/65H/64H/63H CS1D- CPU67H/65H/67S/65S/44S/42S	CPU mode	RS-232C	-	Direct connection
		Link mode	RS-232C	CS1W-SCB21-V1 CS1W-SCB41-V1 CS1W-SCU21-V1	Cnet
			RS-422/485	CS1W-SCB41-V1 CS1W-SCU31-V1	Cnet
		Link mode	Ehternet	CS1W-ETN21	FEnet
CJ1	CJ1G-CPU45/44 CJ1M-CPU23/22/21/13/12/11 CJ1G-CPU45H/44H/43H/42H CJ1H-CPU66H/65H	CPU mode	RS-232C	-	Direct connection
		Link mode	RS-232C	CJ1W-SCU21-V1 CJ1W-SCU41-V1	Cnet
			RS-422/485	CJ1W-SCU31-V1 CJ1W-SCU41-V1	Cnet
		Link mode	Ethernet	CS1W-ETN21	FEnet

Notice

(1) Not available PLC
► CPU Module direct connection(Loader) is not available.

(2) Term description
► Link: Indicates the communication with PLC module.

15.2 Wiring Diagram

15.2.1 CPU Mode

CS and CJ CPU provide RS-232C port.

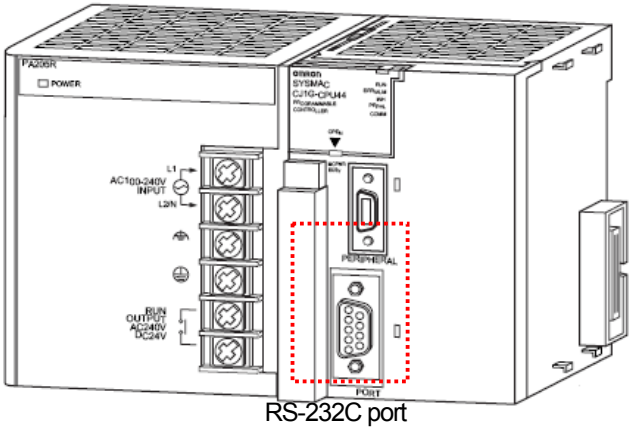

RS-232C port

The wiring for RS-232C is as below.

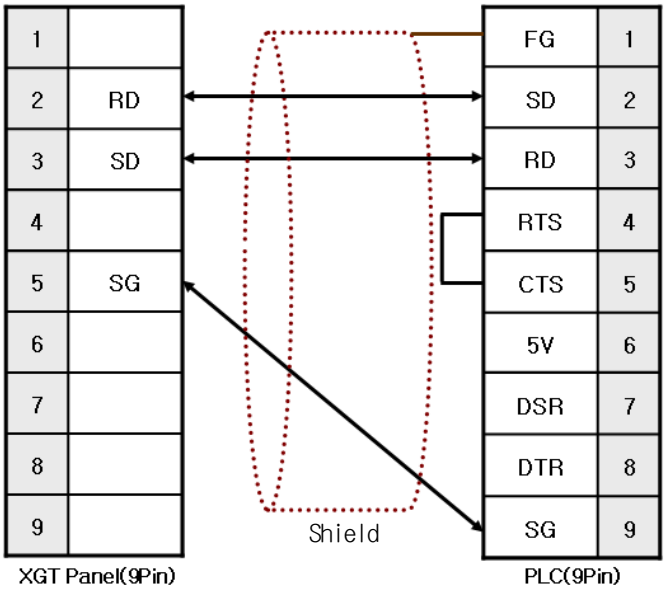

Notice

(1) Suggestions

► It has different wiring method from normal one so be attentive to wiring.

► A shielded wire is recommended for stable communication. (For detailed wiring, refer to the OMRON Communication manual.)

15.2.2 Link mode: Cnet

The wiring for RS-232C is the same as the above 15.2.1

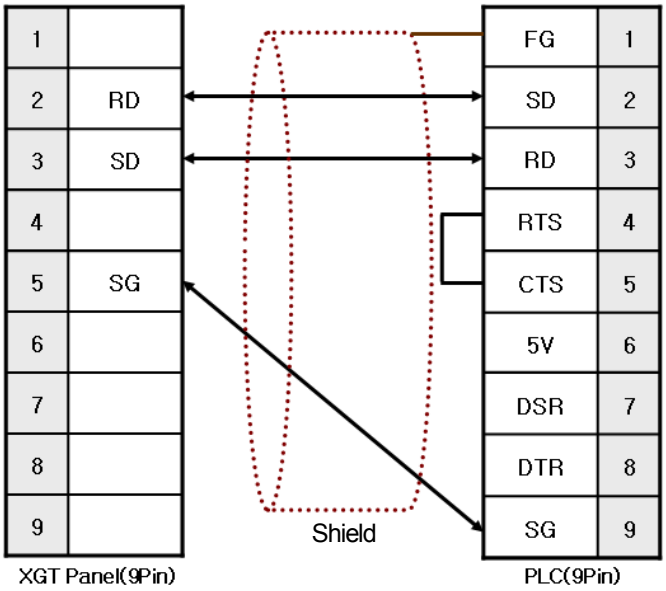

The wiring for RS-422/485 is as below.

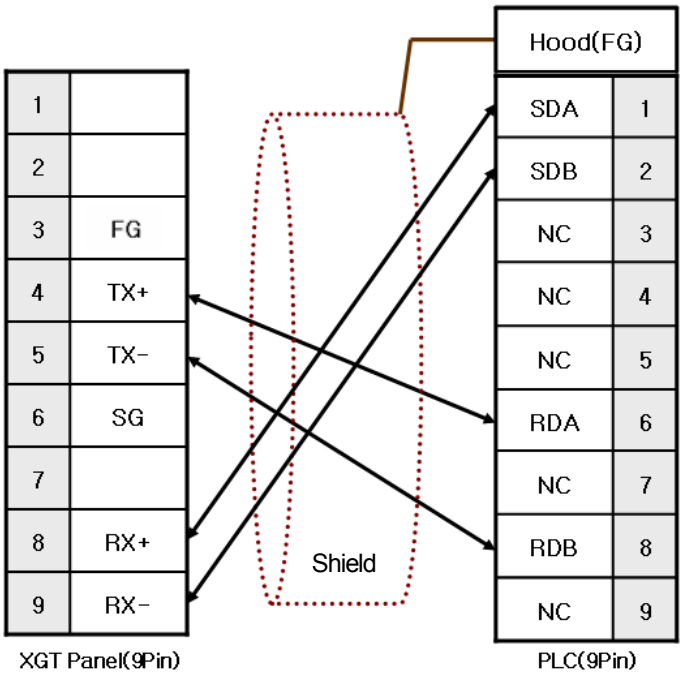

OMRON's Host Link protocol provides 4 lines wiring method only not 2 lines.
Put the switch at '4' position as shown at below picture.
A terminator resistor is embedded so make the switch to set terminate resistor 'ON'.

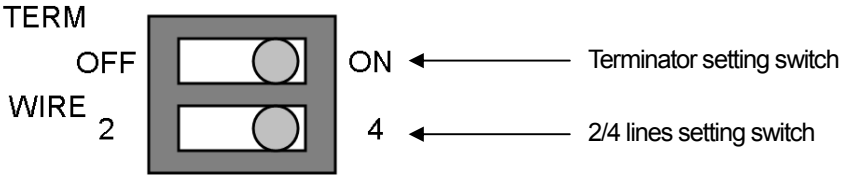

Setting switcher are different depending on communication module so for setting, refer to the below pictures.

CS1W-SCB41-V1

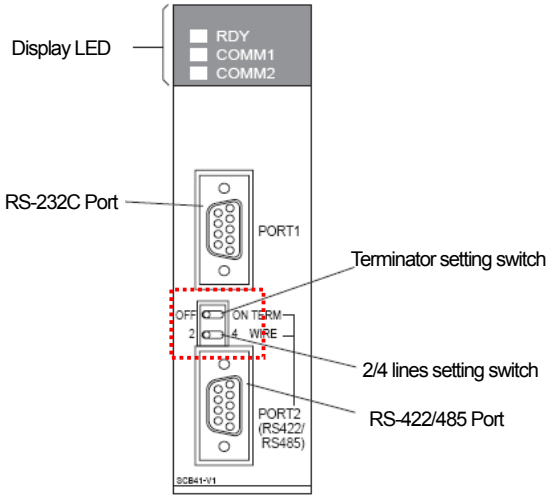

CS1W-SCU31-V1

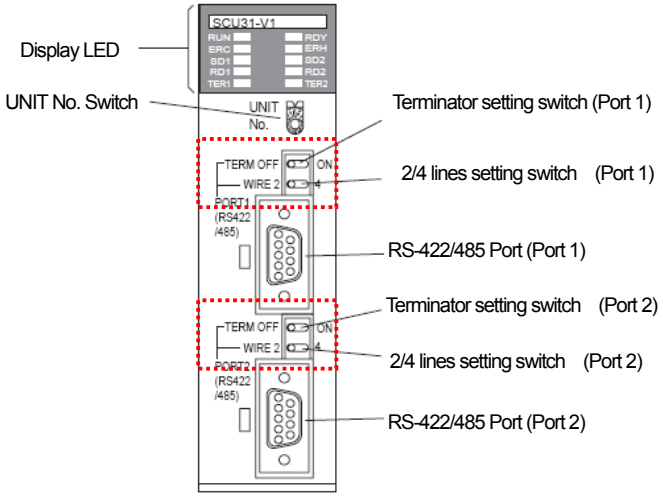

CJ1W-SCU41-V1

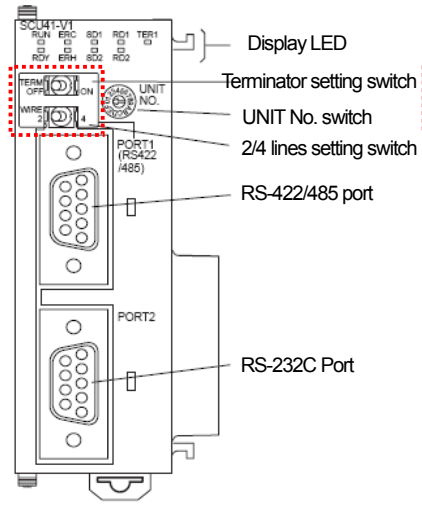

CJ1W-SCU31-V1

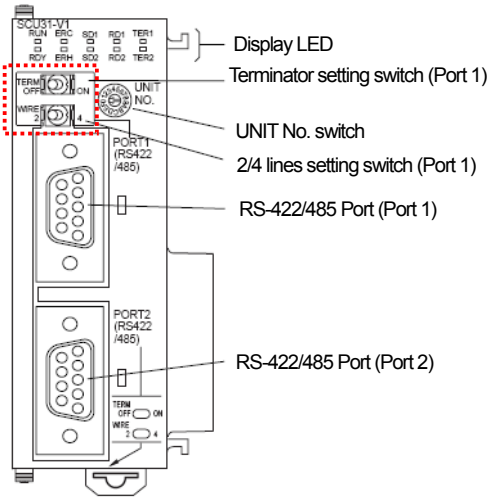

CJ1W-SCU31-V1
(Bottom surface)

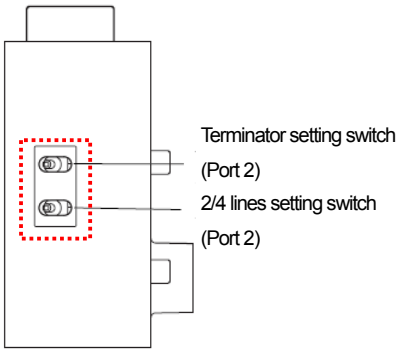

Notice

(1) Suggestions

► Set the terminate switch of XGT Panel.

► A shielded wire is recommended for stable communication. (For detailed wiring, refer to the OMRON Communication manual.)

► When applying 1:N connection through RS-422/485 communication mode, set(ON) the terminator switch for the last communication module only.

(2) Term Description

► Host Link indicates connection between host PC and OMRON PLC and XGT Panel communicates with OMRON PLC with this way.

15.2.3 Link Mode: FEnet

Wiring method to OMRON Ethernet module is the same as normal Ethernet cable wiring method. For more details, refer to the Chap.2.

15.3 Communication Setting

15.3.1 CPU Mode

You can set the communication parameter for PLC at CX-Programmer and for more details, refer to OMRON Communication manual. The simple description on communication setting will be provided hereupon.

(1) Select 'Settings' at a project screen.

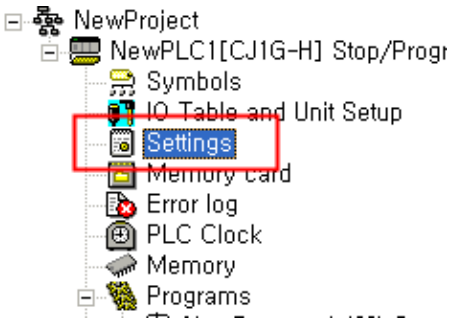

(2) a setting screen is displayed , select 'Host Link Port' tab and set it as below.

(a) Select 'Host Link' for the mode.

(b) Select the unit number as '0'.

(c) Set communication speed, data type.

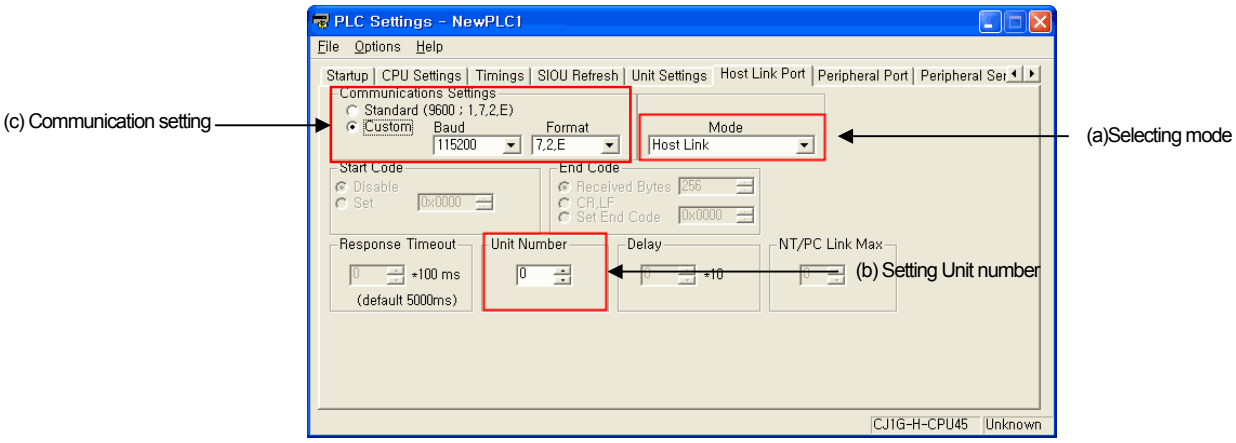

(3) If setting PLC is completed, set the same value at XP-Builder as the communication parameter for PLC.

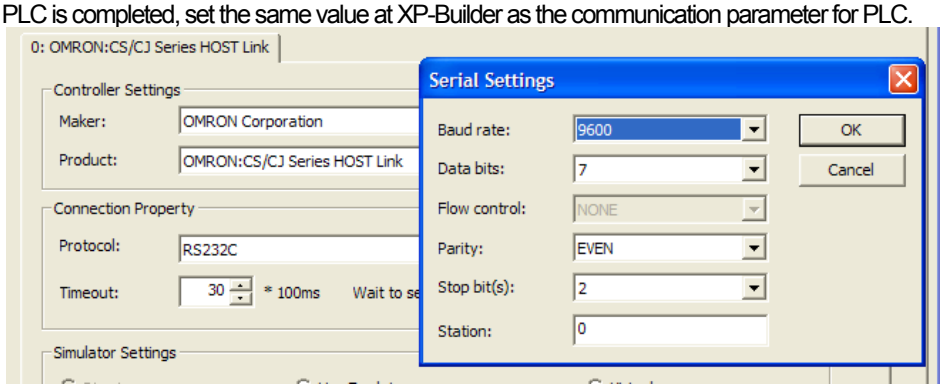

Notice

(1) Suggestions to set PLC
►This manual covers the simple description on setting so for setting communication, make sure to refer to OMRON manual.
►The details on setting OMRON PLC can be chanted without a previous notice, before setting communication, make sure to check OMRON Communication manual.
(2) Suggestions to set XP-Builder
► When creating project or setting communication, you need to refer to the below.

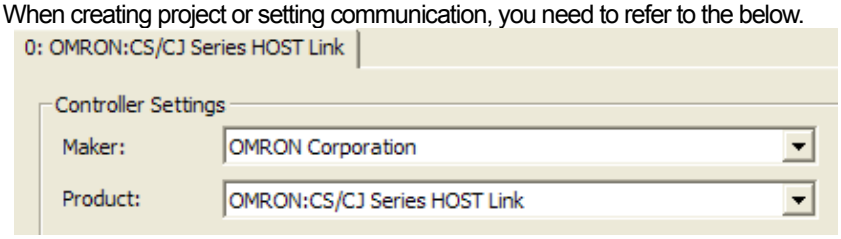

15.3.2 Link Mode: Cnet

You can set the communication parameter for PLC at CX-Programmer and for more details, refer to OMRON Communication manual. The simple description on communication setting will be provided hereupon.

(1) Select 'IO Table and Unit Setup' at a project screen.

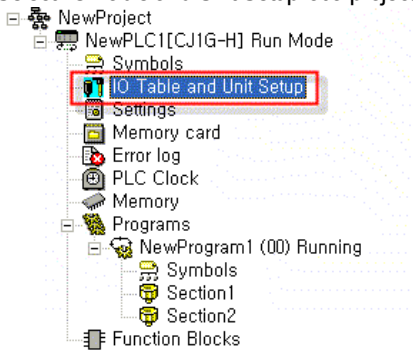

(2) If IO setting screen is displayed, select the communication module installed to PLC as below.

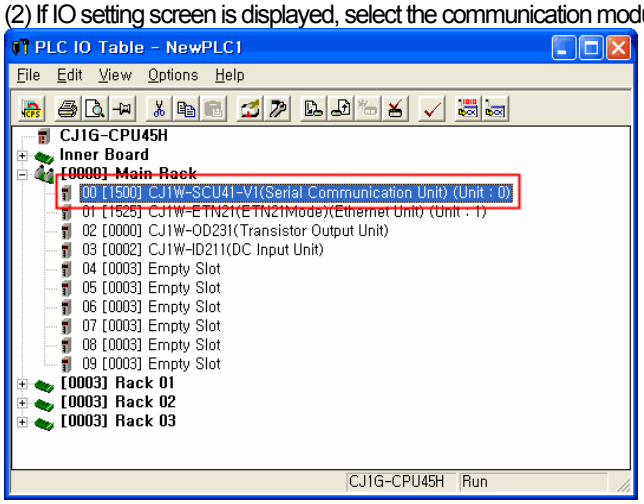

(3) If the communication setting screen is displayed as below, set communication parameters.
(a) Select 'Host Link' for the mode (Serial communications mode).
(b) Select 'Mode C' for Host Link mode(Host Link compatible device mode).

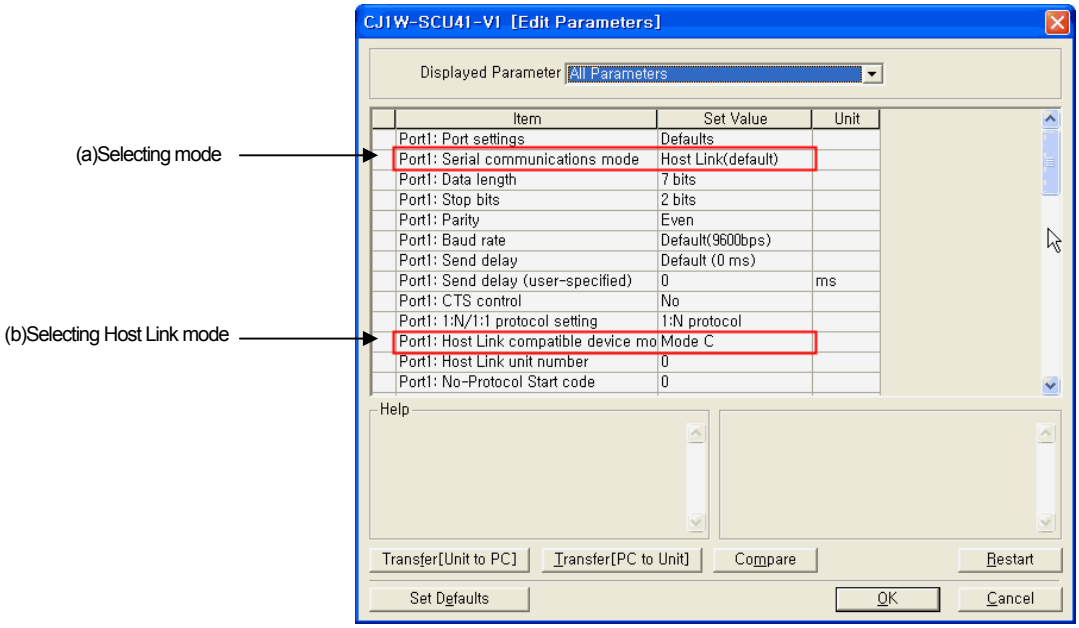

(c) The basic settings are as above but if you need to change communication settings at your discretion, change the Port Settings from 'Defaults' into 'User settings' as the following picture.

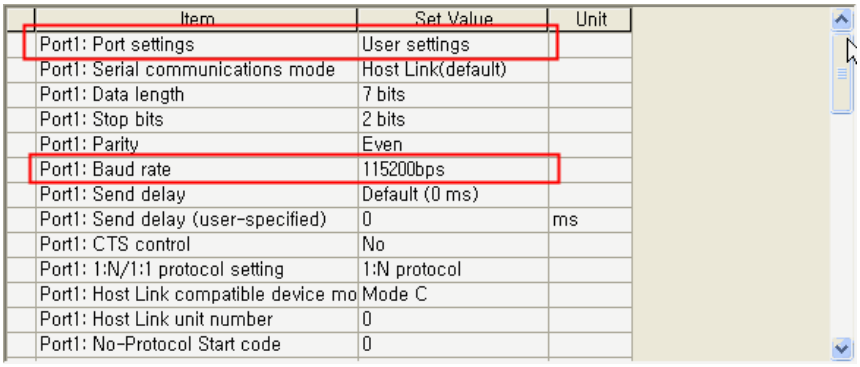

(4) Select 'Unit No.' at communication module. At this time, 'Unit No.' should be input when adding a new communication module at (1) process or you can select it at IO Setting screen as below.

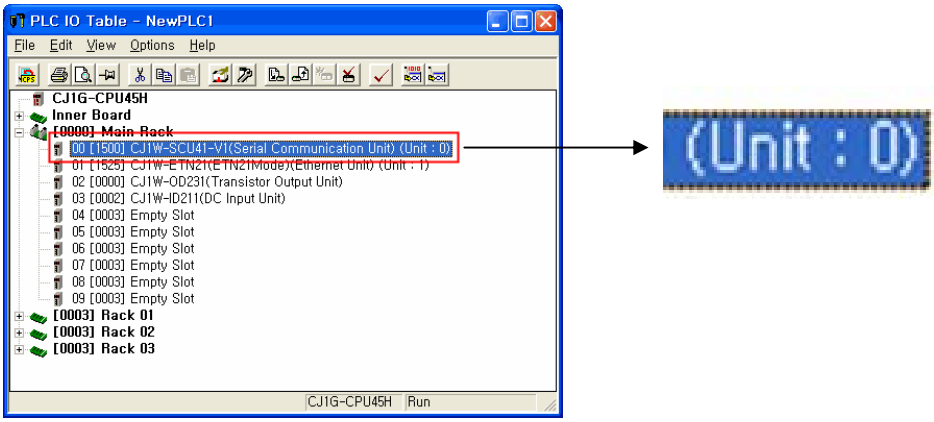

(5) The setting descriptions for XP-Builder are as below.

(a) Input the same value as the 'Unit No.' set at (4).

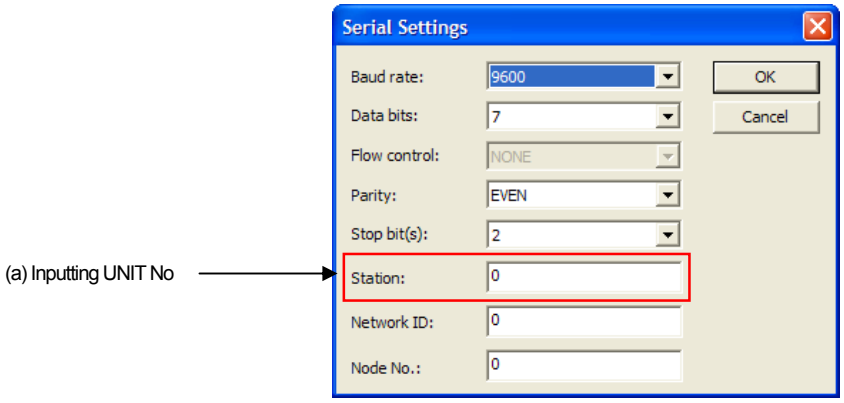

(b) Set the network No. and node No. as '0'. If you establish the network No. at CX-Net Network Configuration among OMRON PLC programs, apply the value. The communication module of OMORN has no switch to set node, input node No. as '0'. For more details, refer to OMRON Communication manual.

(c) Apply the same parameter for basic communication settings as process (3).

Notice

(1) Suggestions to set PLC

►This manual covers the simple description on setting so for setting communication, make sure to refer to OMRON manual.

►The details on setting OMRON PLC can be chanted without a previous notice, before setting communication, make sure to check OMRON Communication manual.

(2) Suggestions to set XP-Builder

► When creating project or setting communication, you need to refer to the below.

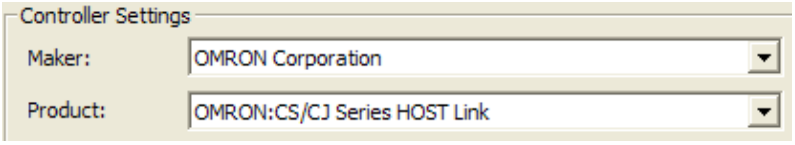

(3) Checking communication status.

►There are SD, RD LED for Cnet module. If you have a normal communication, you can see that LED flashes fast.

15.3.3 Link Mode: FEnet

You can set the communication parameter of PLC at CX-Programmer and for more details, refer to OMRON Communication manual.

(1) Select 'IO Table and Unit Setup' a project screen.

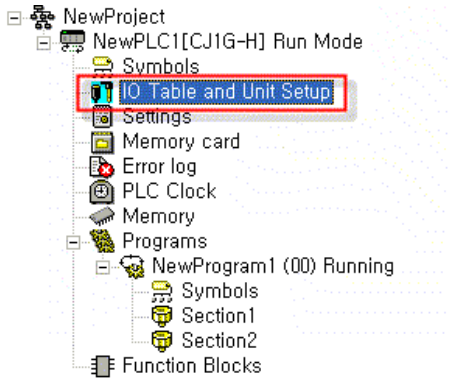

(2) If IO setting screen is displayed, select Ethernet communication module installed to PLC.

(3) You can set the Ether module with two communication protocol module types.
First, you can see how to set UTP/IP.
(a) Select 'Auto(dynamic)' mode at the below setting screen.

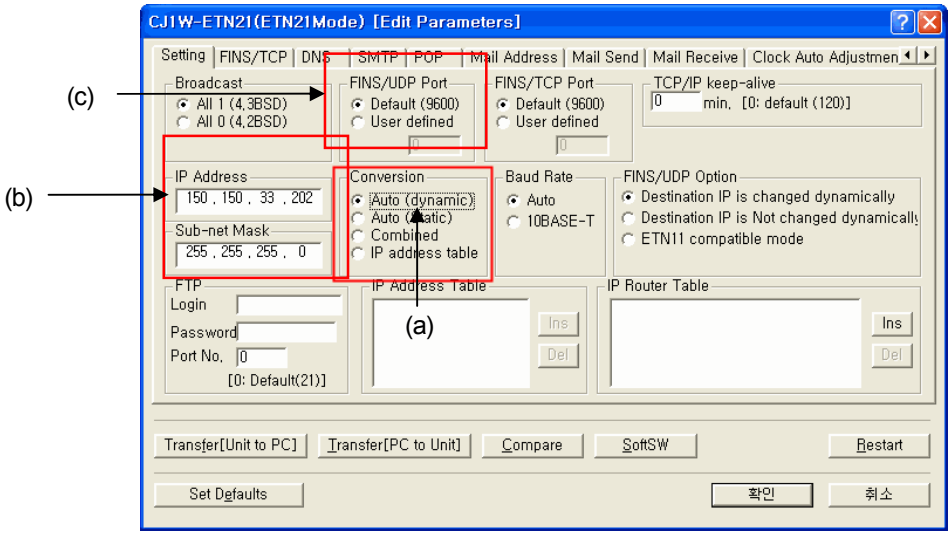

(b) Set IP address and Sub-net Mask. Set Sub-net Mask as '255.255.255.0' like the picture and IP address should have the same 3 digits(XXX.XXX.XXX.~) as XGT Panel(namely, it should be connected to the same network.)

(c) Select the port as 'Default(9600)'.

(d) Setting description for XP-Builder is as below.

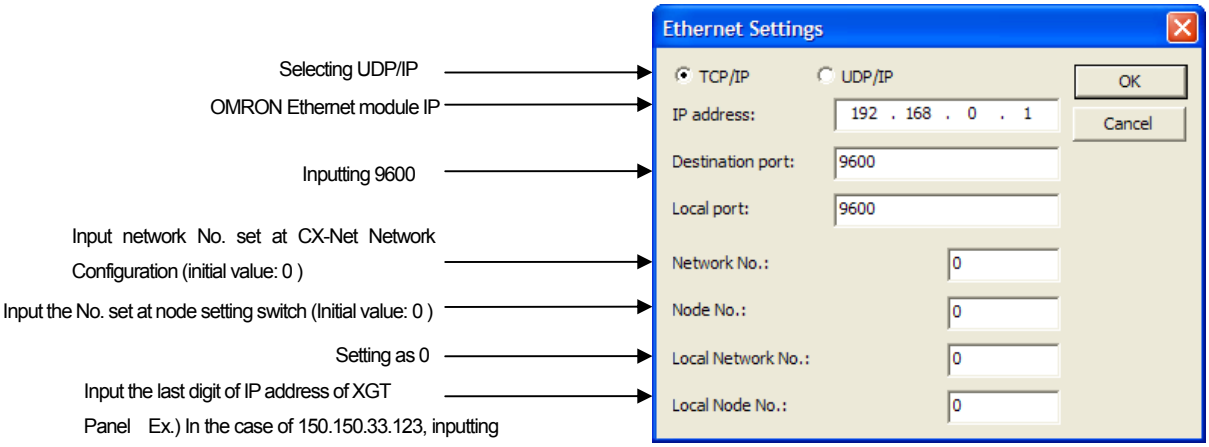

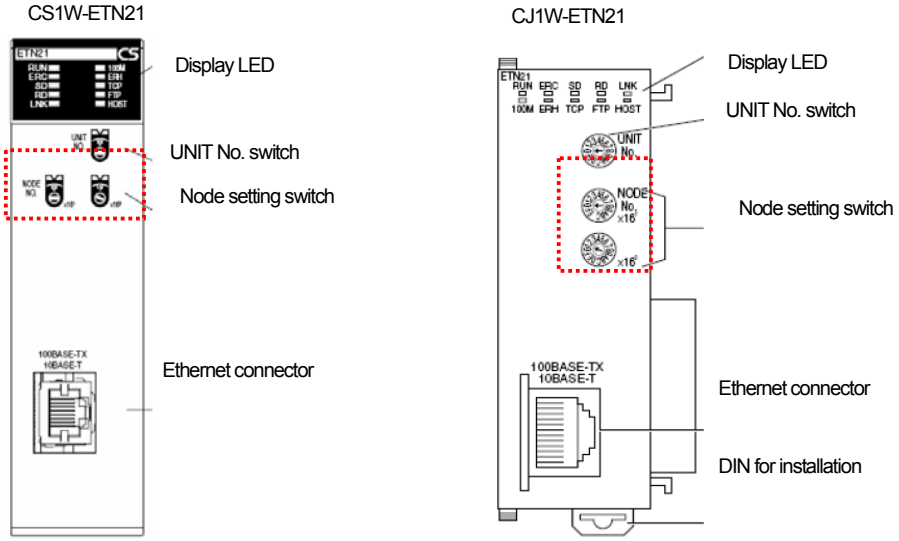

(4) Now, you can see how to set TCP/IP.

(a) Select 'Auto(dynamic)' mode at the below display screen.

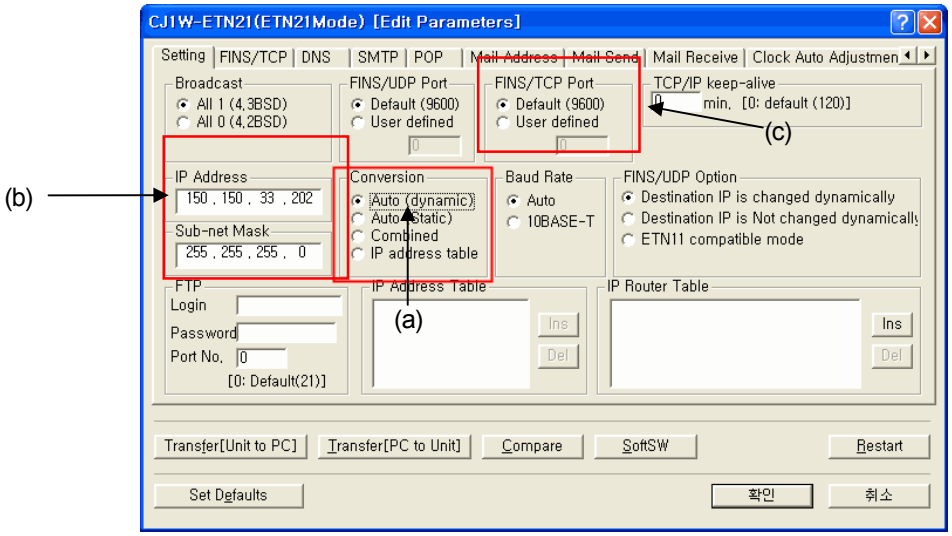

(b) Set IP address and Sub-net Mask. Set Sub-net Mask as '255.255.255.0' like the picture and IP address should have the same 3 digits(XXX.XXX.XXX.~) as XGT Panel(namely, it should be connected to the same network.)

(c) Set the port as 'Default(9600)'.

(d) Set FINS/TCP Server as below, which is basically set so check it.

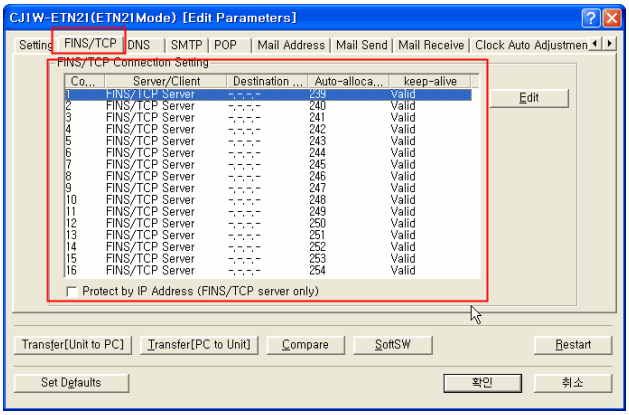

(e) Setting description for XP-Builder is as below.

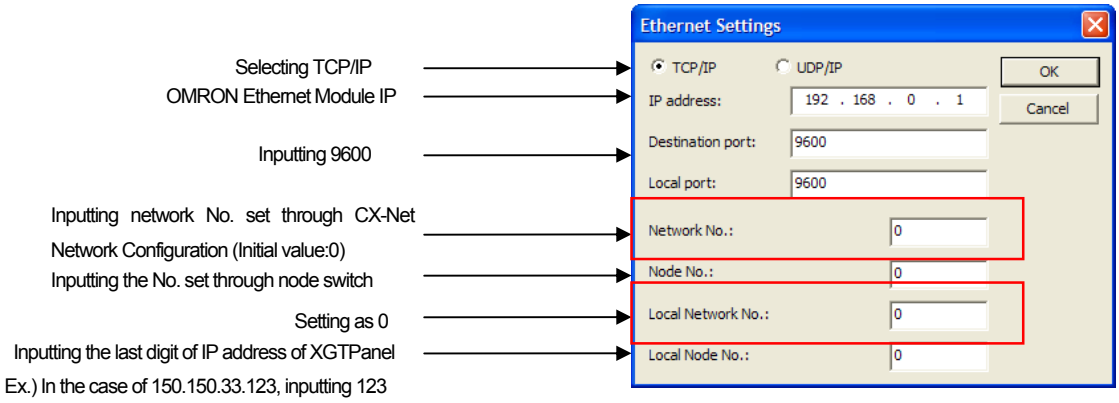

* **Make sure that the targeted node No. should be different from local node No.**
If you have the same No., communication does not work normally.

Notice

(1) Checking communication status.
►There are SD, RD LED for Cnet module. If you have a normal communication, you can see that LED flashes fast.

(2) Suggestions to set PLC
►This manual covers the simple description on setting so for setting communication, make sure to refer to OMRON manual.
►The details on setting OMRON PLC can be chanted without a previous notice, before setting communication, make sure to check OMRON Communication manual.

(3) Suggestions to set XP-Builder
► When creating project or setting communication, you need to refer to the below.

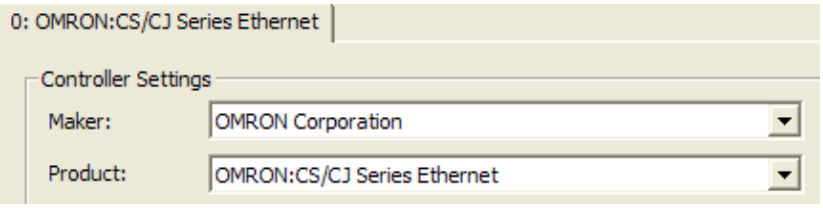

15.4 Available Device

The available devices for XGP Panel are as below.

Area	Size	Bit Contacts	Word Data	Remarks
Channel I/O	98304contacts	0000.00 ~ 6143.15	0000 ~ 6143	Decimal Number
W	8192contacts	W000.00 ~ W511.15	W000 ~ W511	Decimal Number
A	15360contacts	A000.00 ~ A959.15	A000 ~ A959	Decimal Number
H	8192contacts	H000.00 ~ H511.15	H000 ~ H511	Decimal Number
T(Flag)	4096contacts	T0000 ~ T4095	Word is not available	Decimal Number
C(Flag)	4096contacts	C0000 ~ C4096	Word is not available	Decimal Number
T(Value)	4096words	Bit is not available	T0000 ~ T4095	Decimal Number
C(Value)	4096words	Bit is not available	C0000 ~ C4096	Decimal Number
D	524288contacts	D00000.00 ~ D32767.15	D00000 ~ D32767	Decimal Number
E	Different from CPU (E0 ~ EC)			Decimal Number
EM	32768words	Bit is not available	EM00000 ~ EM32767	Decimal Number
TKB	32contacts	TKB00 ~ TKB31	Word is not available	Decimal Number
TK	256contacts	TK00.00 ~ TK31.07	TK00 ~ TK30	Decimal Number
IR	16words	Bit is not available	IR00 ~ IR15	Decimal Number
DR	16words	Bit is not available	DR00 ~ DR15	Decimal Number

Notice

(1) Suggestions

- ► For details and how to use device, refer to XP-Builder manual.
- ► Use it within device area.
- ► The range of device may be different depending on CPU module(especially, E device area) so refer to each CPU module manual.
- ► Reading/Writing is not allowed for T2048 ~ T4095, C2048 ~ 4095 areas.
- ► Reading/Writing is not allowed for D10000 ~ D32767 areas.
- ► Reading/Writing is not allowed for E10000 ~ E32767.
- ► Writing process for A device is available at A448 ~ A959 only.

Chap.16 : OEMax Controls : Nx-CCU+

Nx-CCU+ PLC Driver of OEMax Controls is available since V1.04 so if you use the previous version, please apply XP-Builder and XGT Panel software that are beyond V1.04 from our web-site.

16.1 Available PLC

XGT Panel can be connected the below devices.

PLC Type	CPU Module	Connection mode	Communication mode	Connection module	Remarks
NX700	CPU700P	Direct connection	RS-232C RS-485	CPU700P	

16.2 Wiring Diagram

XGT Panel can be connected to OEMax NX-CCU+ through RS-232C, RS485.

16.2.1 RS-232C Connection

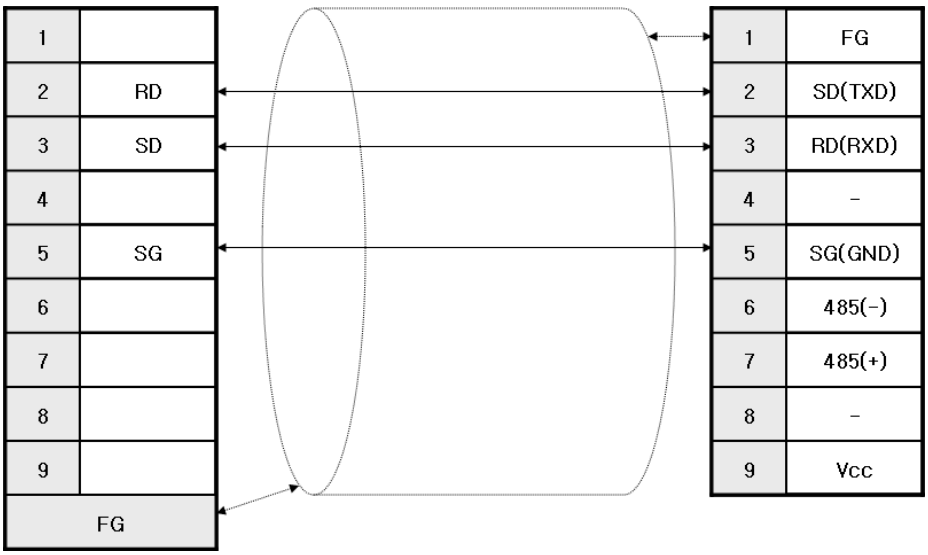

16.2.2 RS-485 Connection

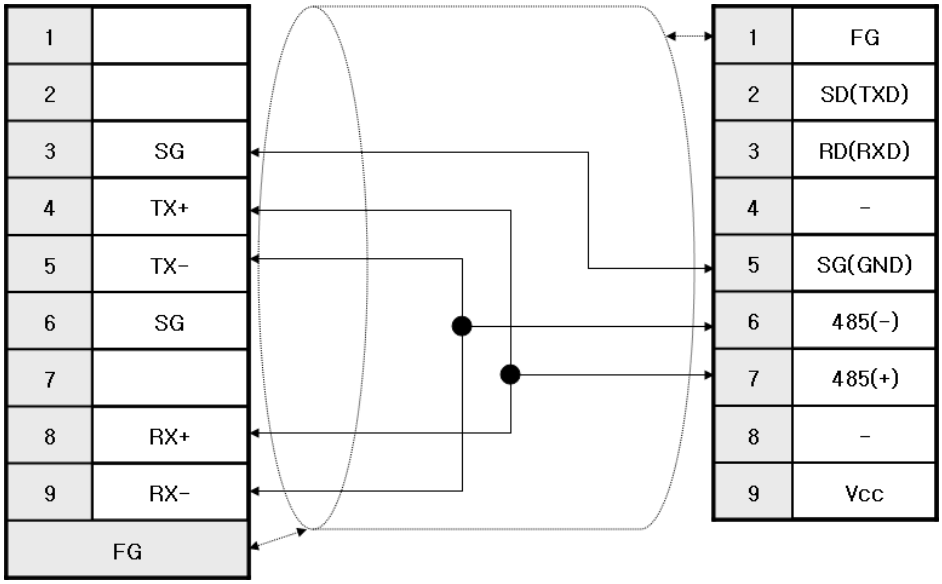

Notice

1) Suggestions
   ► Set the terminator switch of XGT Panel.
   ► For shielded wiring, refer to the Chap.2.

16.3 Communication Setting

XGT Panel can be connected to OEMax Nx-CCU+ through RS-232C, RS485.

16.3.1 PLC(OEMax) Setting

The outline of the PLC(OEMax Nx-CCU+) is as below.

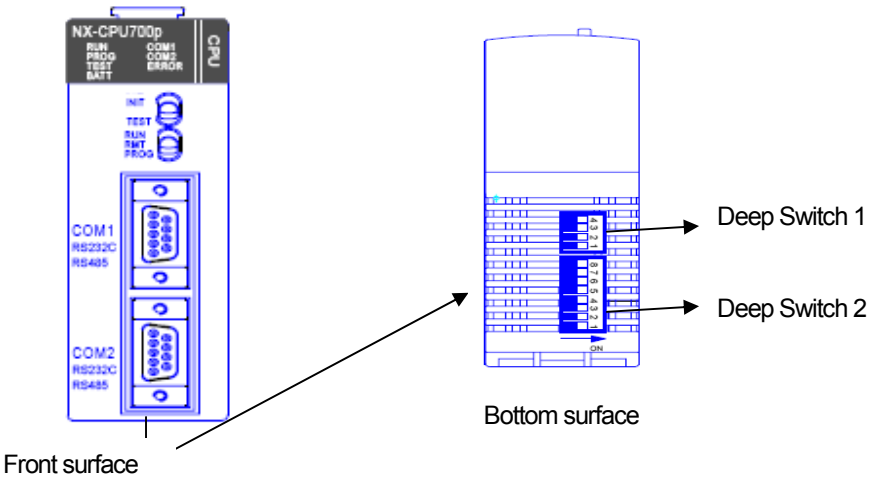

You can set the communication for PLC(OEMax Nx-CCU+) with deep switch 2 of bottom surface.

(1) Pin No. 5,6,7,8 indicates the switch to set transmission speed. For more detailed setting, refer to the below.
(2) Pin No. 4 indicates the switch to select the communication mode of COM1.
(3) Pin No. 3 indicates the switch to select the communication mode of COM2.
(4) Pin No. 2 is for system setting and set it as OFF when connecting communication.
(5) Pin No.1 is for program booting and set it as OFF when connecting communication.

PIN No.		Switch		Function	Outline of Deep Switch 2
8	7	OFF	OFF	COM2 terminal : Setting 9600 bps	
		ON	OFF	COM2 terminal : Setting 19200 bps	
		OFF	ON	COM2 terminal : Setting 38400 bps	
6	5	OFF	OFF	COM2 terminal : Setting 9600 bps	
		ON	OFF	COM2 terminal : Setting 19200 bps	
		OFF	ON	COM2 terminal : Setting 38400 bps	
4		ON		COM1 : Selecting RS-485 mode	
		OFF		COM1 : Selecting RS-232C mode	
3		ON		COM2 : Selecting RS-485 mode	
		OFF		COM2 : Selecting RS-232C mode	
2		OFF		Fixing as OFF all the time	
1		OFF		Fixing as OFF all the time	

(6) Setting Unit No.

You can select the unit No. as below by selecting [Online]->[System information] at WIN GPC or selecting [System information] from a project screen.

(7) You can set the terminator resistor of PLC under RS-485 communication with deep switch 1 as below.

PIN No.		Switch		Function	Deep Switch 1
4	3	ON	ON	Sets terminator resistor at COM1 terminal	
		OFF	OFF	Does not set terminator resistor at COM1 terminal	
2	1	ON	ON	Sets terminator resistor at COM2 terminal	
		OFF	OFF	Does not set terminator resistor at COM2 terminal	

Notice

1) Suggestions to set PLC
   ►For installation, make sure to refer to the device's manual.
   ►Especially, be noted that setting methods are different depending on device type.

16.3.2 XGT Panel Setting

You can set the communication of XGT Panel through XP-Builder.

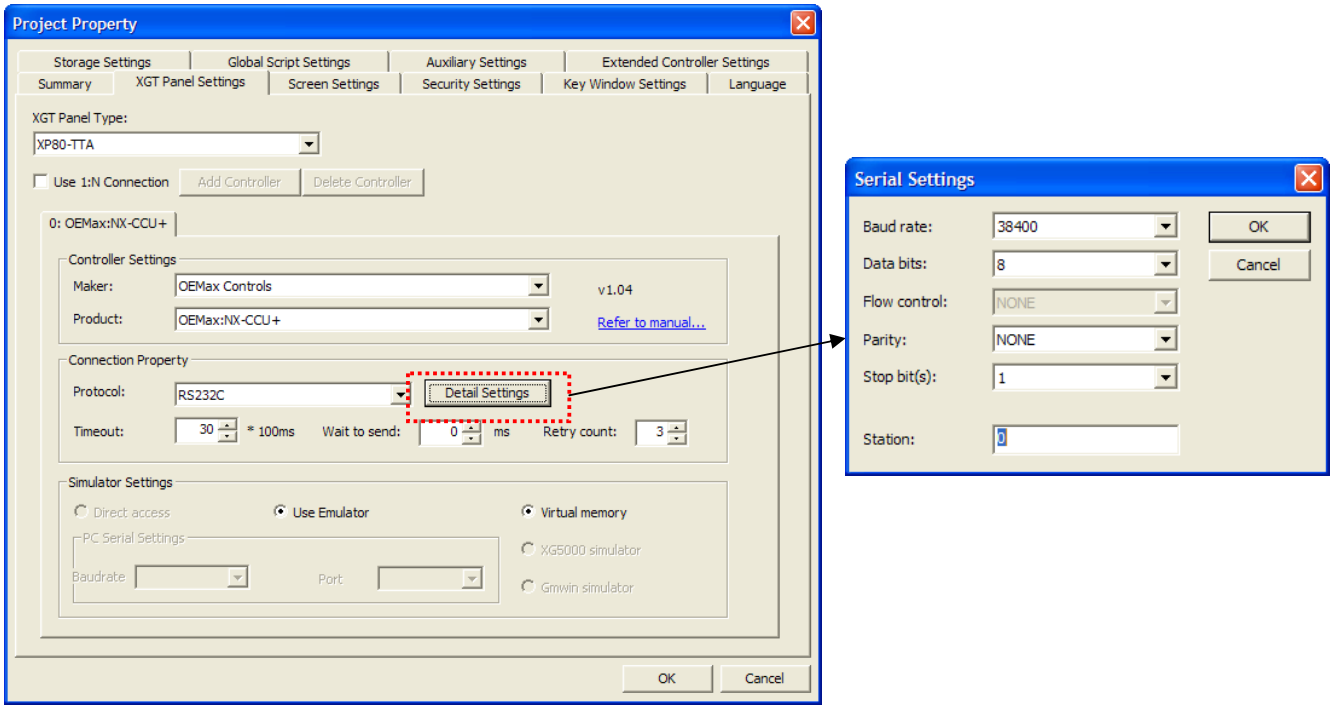

(1) Setting controller

Select OEMax Controls for the manufacturer and for the item, select OEMax : NX-CCU+.

(2) Connection Property

Select the proper connection mode; RS-232C, RS-485 for your own working environment.

(3) Setting detailed connection option

Select the proper transmission speed, data bit, parity, stop bit for your own working environment.

The unit No. is the opposite device's No. If you have wrong unit No., time out will be displayed at the upper place of XGT Panel screen. Check the unit No. again.

(4) Download established communication details to XGT Panel.

Notice

(1) Suggestions
- ► In the case of communication error, check if the parameters including transmission speed and data bit are correct.
- ► If time out is shown at the upper place of a screen, check the unit No.
- ► Only the transmission speed of more than 9600bps is allowed for XGT Panel.

16.4 Available Device

The available devices for XGT Panel are as below.

Area	Size	Bit Contacts	Word Data	Remarks
R	128 words	R0.0 ~ R127.15	R0000 ~ R127	
L	64 words	L0.0 ~ L63.15	L0 ~ L63	
M	128 words	M0.0 ~ M127.15	M0 ~ M127	
K	128 words	K0.0 ~ K127.15	K0 ~ K127	
F	16 words	F0 ~ F15.15	F0 ~ F15	
TC	255 contacts	TC0 ~ TC255	Word is not available	
W	5120 words	Bit is not available	W0 ~ W5119	
SV	256 words	Bit is not available	SV0~SV255	
PV	256 words	Bit is not available	PV0~PV255	
SR	512 words	Bit is not available	SR0 ~ SR511	

Notice

(1) Suggestions

► Use it within device area.

► The range of device is different depending on CPU of connected devices so for more details, refer to the device manual.

Chap.17 AB: Control/CompactLogix Series, MicroLogix Series (EtherNet/IP)

17.1 Available PLC

PLC Type	CPU Module	Connection mode	Communication mode	Connection Module	Remarks
CompactLogix	1769 CompactLogix	EtherNet/IP	Ethernet	1769-L32E 1769-L35E 1768-ENBT	RSLogix5000 (Programming software)
ControlLogix	1768 CompactLogix			1756-EN2T 1756-EN2F 1756-ENBT	
MicroLogix	MicroLogix1000	EtherNet/IP	Ethernet	1761-NET-ENI	RSLogix500

Notice

(1) Not available PLC
► Connection problem may occur depending on module O/S version.
(2) Programming Tool
► RSLogix5000 – Controlling, CompactLogix
► RSLogix500 – PLC-5, SLC500, MicroLogix

17.2 Control/CompactLogix Series (EtherNet/IP)

17.2.1 Connection

The device area is tag type under Control/CompactLogix series so a user needs to define tag directly.
To apply the tag defined by a used to XP-Builder, L5K or CSV file should be created.
After executing RSLogix5000 program, select the menu [Communication] – [Who Active].

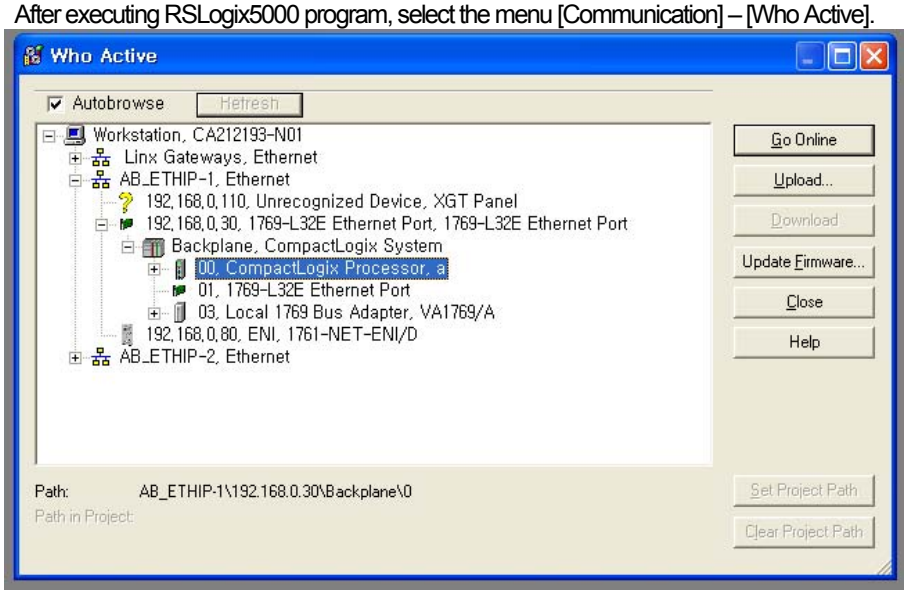

After connecting to the PLC, save the created controller tag (Save as file extension L5K)

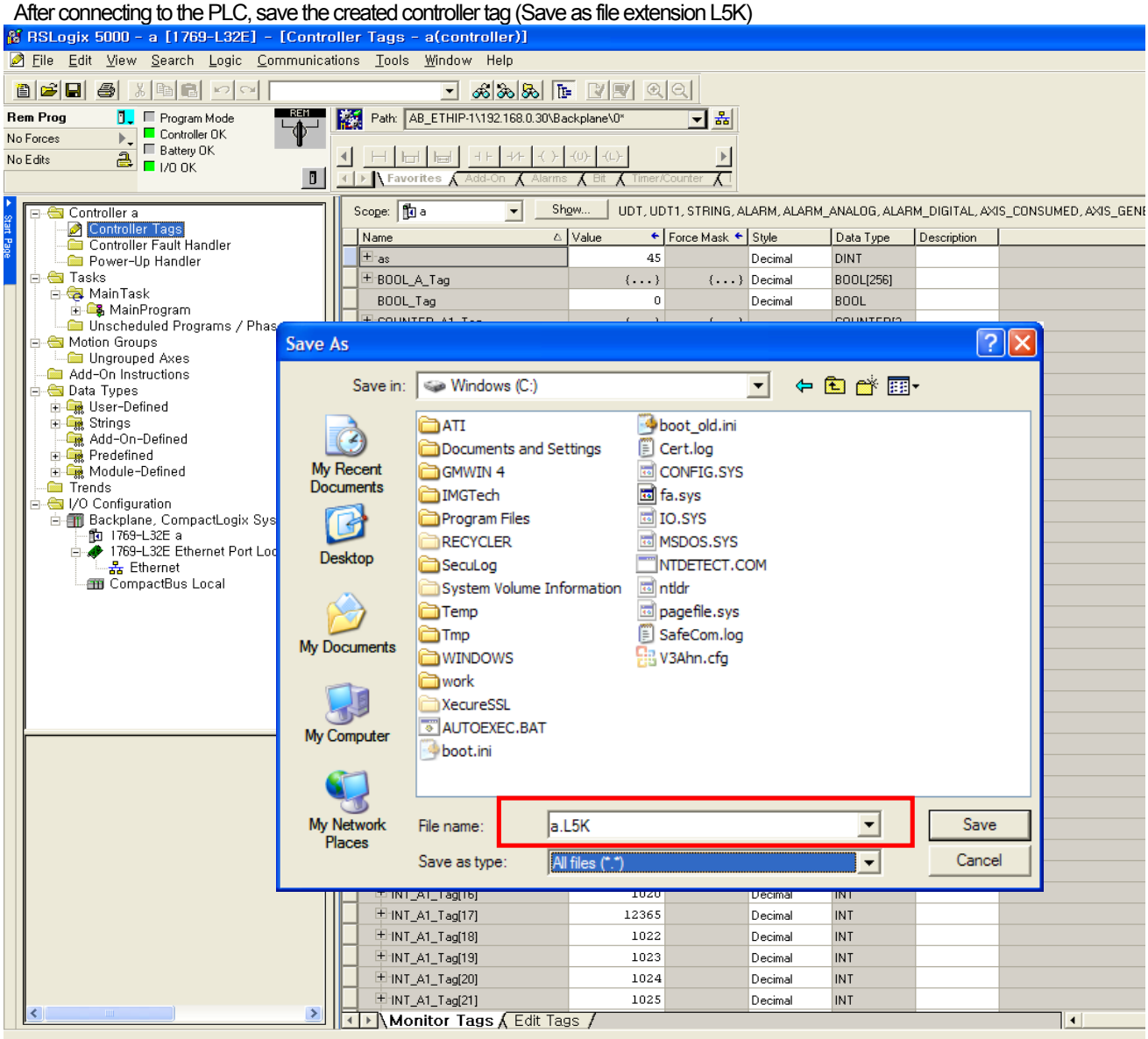

Notice

1) Suggestions
- ► For setting PLC communication or creating tag, refer to RSLogix5000 manual.
- ► Program Tag: External access is not allowable through Program local Tag -> in the case of applying to XP, error occurs.
- ► Bit Offset and continuous reading are available for BOOL Array or Access area only.
- ► CSV File Import: The function will be added afterward.

17.2.2 Communication Setting

Select the menu [Common]-[Project Property] → [Device Setting]-[Detailed connection option setting]

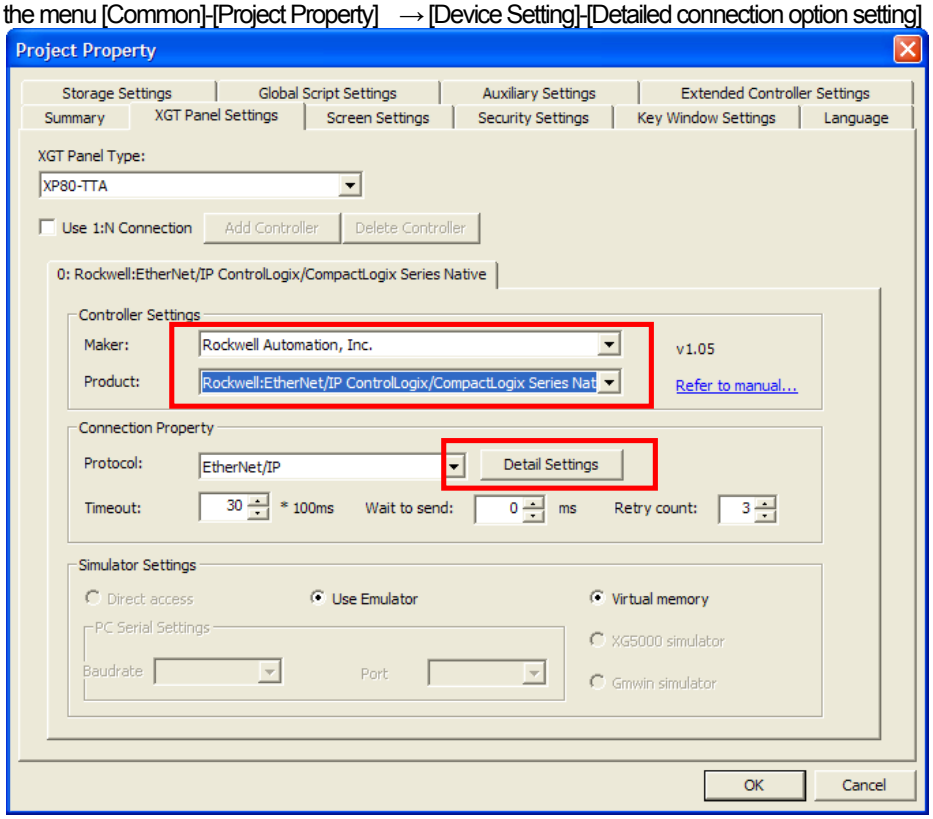

After inputting the IP address of PLC EtherNet/IP to be connected, import the created file.

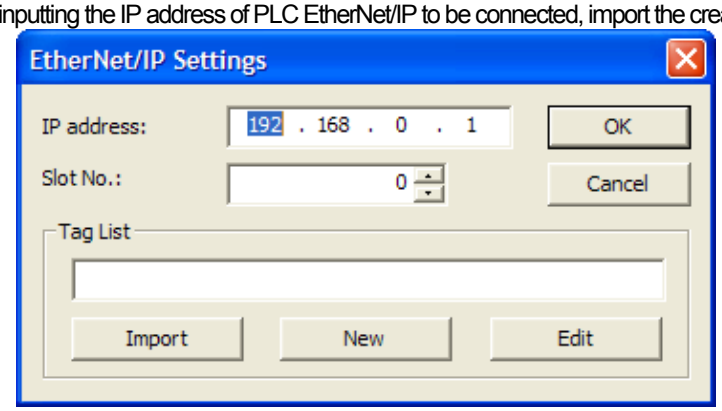

Notice

1) Suggestions
   ► Slot No.: designates the slot No. of CPU. (Not slot No. of communication module)
   ► It can be applied only when Tag list is already declared or imported.

17.3 MicroLogix Series (EtherNet/IP)

17.3.1 Connection

After executing RSLogix500 program, select the menu [Comms] – [Who Active Go Online].

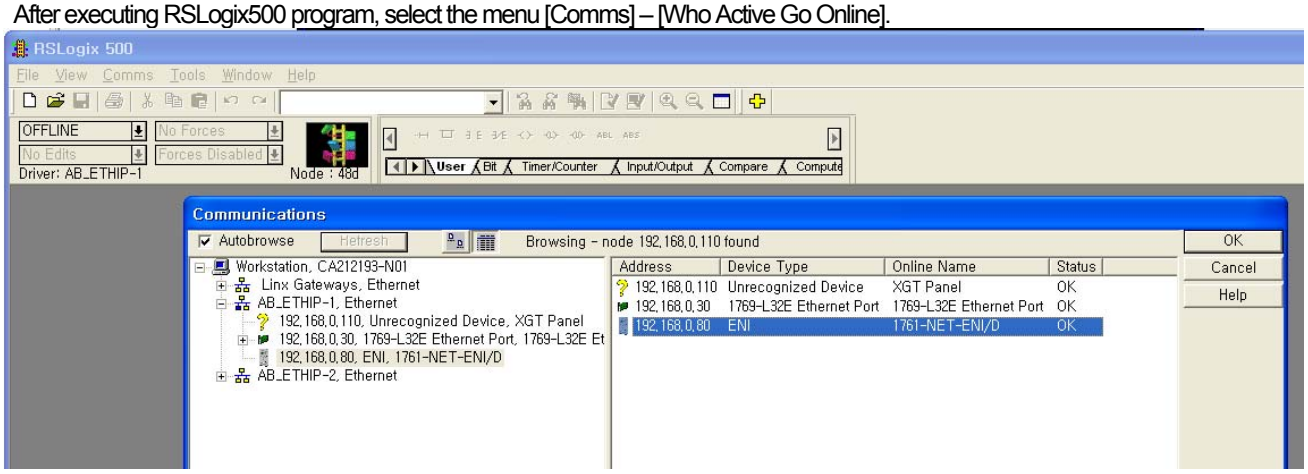

If you click [Create New File], connection process is completed.

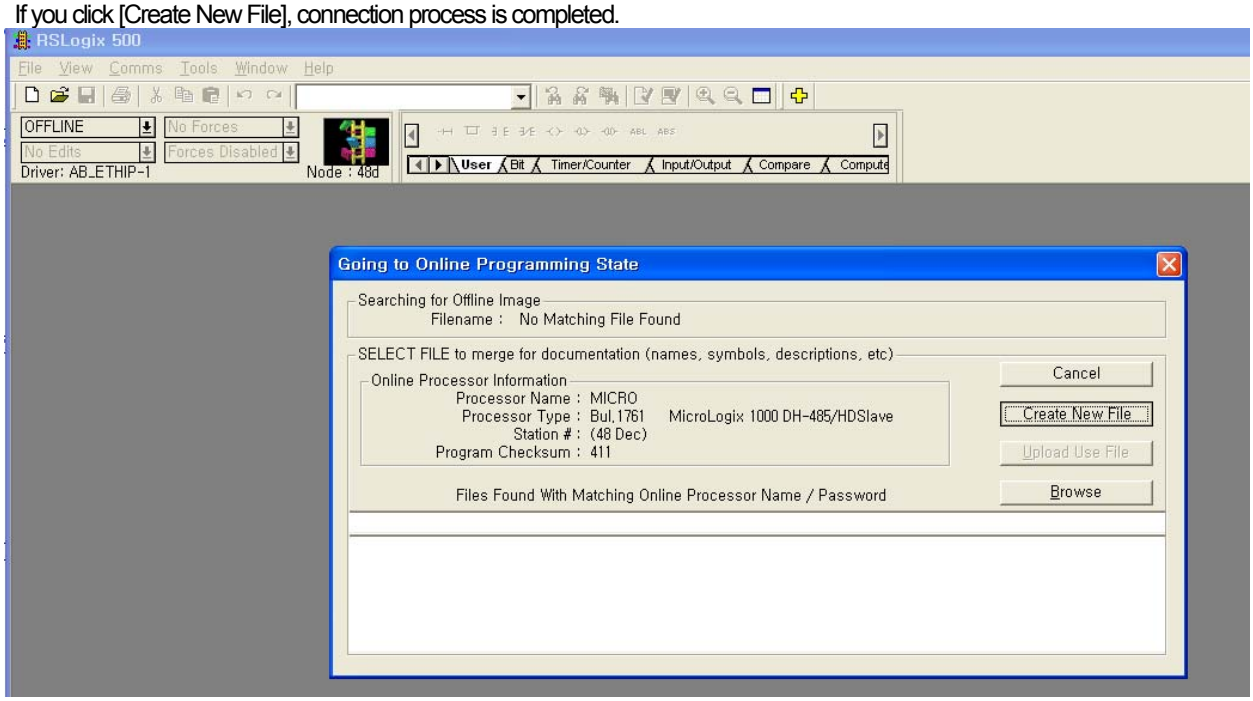

Notice

1) Suggestions
   ► For setting PLC communication, refer to RSLogix500 manual.

17.3.2 Communication Setting

Select the menu [Common]-[Project Property] → [Device Setting]-[Detailed connection option setting]

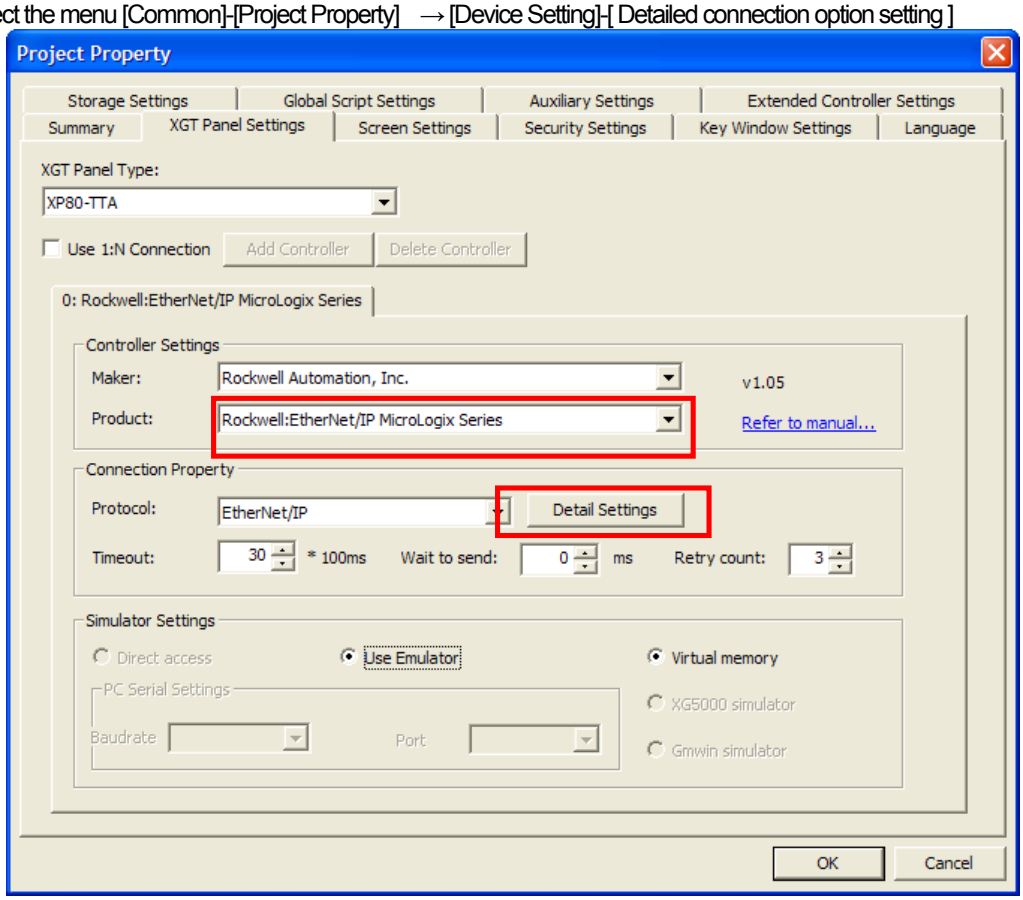

Input the IP address of PLC EtherNet/IP module to be connected.

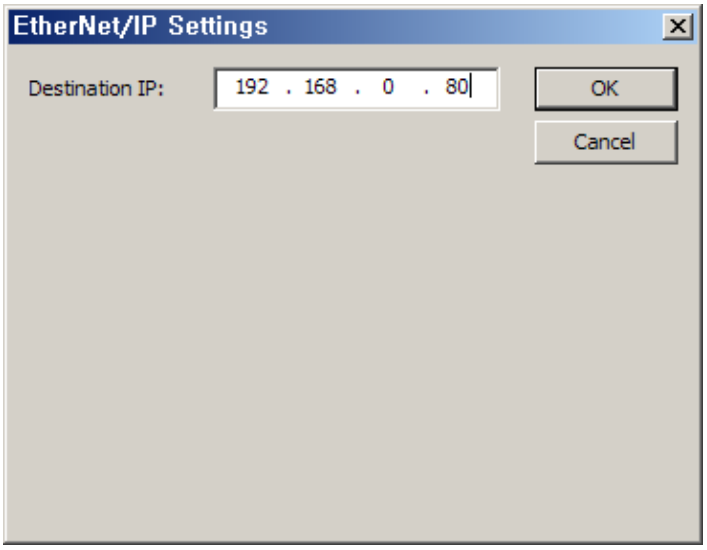

17.3.3 Device Nomenclature

It indicates the device configuration of MicroLogix under XP-Builder and offset address is set to the number of digits.

Data Type	PLC	XP-Builder
Bit Integer File Bit File Input File Output File	N7:12/11 File Type File Number Element Bit	N00701211 File Type File Number (3 digits) Element (3digits) Bit (2digits)
Word Integer File Bit File Input File Output File	N7:123 File Type File Number Element	N007123 File Type File Number (3digits) Element (3digits)
Bit/Word Timer File Counter File Controller File Floating Point File String File ASCII File	T4:0/EN File Type File Number Element Sub Element	TEN004012 File Type File Number (3digits) Element (3digits) Sub Element

17.4 Available Device

The available devices for XGT Panel are as below.

(1) Control/CompactLogix Series

Type	Type Code	Description
SINT	C2	Signaled 8 Bit
INT	C3	Signaled 16Bit
DINT	C4	Signaled 32Bit
LINT	C5	Signaled 64Bit
USINT	C6	Non-Signaled 8Bit
UINT	C7	Non-Signaled 16Bit
UDINT	C8	Non-Signaled 32Bit
ULINT	C9	Non-Signaled 64Bit
REAL	CA	32 Bit real number
LREAL	CB	64 Bit real number
STIME	CC	Synchronous time data
DATE	CD	Date
TIME_OF_DAY	CE	Time
DATE_AND_TIME	CF	Date and Time
STRING	D0	Character string (1 byte/character)
BYTE	D1	8 Bit Bit String
WORD	D2	16 Bit Bit String
DWORD	D3	32 Bit Bit String
LWORD	D4	64 Bit Bit String
STRING2	D5	Character string (2 byte/character)
FTIME	D6	Duration Time (high resolution)
LTIME	D7	Duration Time (long)
ITIME	D8	Duration Time (short)
STRINGN	D9	Character string (N byte/character)
SHORT_STRING	DA	Character string (1 byte/character, 1byte/length display)
TIME	DB	Duration Time (milliseconds)
EPATH	DC	CIP path segments
ENGUNIT	DD	Engineering Unit
STRINGI	DE	International Character string

Notice

(1) Suggestions

► Available Tag for Bit Address: Only the SINT, INT, DINT are available for Bit Address of the Tag that is not BOOL type.

► When applying SINT type to 16 bit under XP-Builder, only sub-byte is displayed, wiring is allowed.

► Only the tag declared through Array is available for continuous reading(data list, character string, recipe, device to be logged)

► Reading continuous bit is available within internal bit size such as BOOL Array type or DINT.
(DINT tag1.0 ~ tag1.31)

► LINT type is displayed to the lower 32 bit (The maximum device size of XP is 32 bit)

(2) MicroLogix Series

Device		Bit Address		Word Address		Remarks
Input File		I0:0/00 ~ I63:255/15		I0:0 ~ I63:255		-
Output File		O0:0/00 ~ O63:255/15		O0:0~O63:255		-
Status File		S2:0/0 ~ S2:163/15		S2:0 ~ S2:163		-
Binary File		B3:0/0 ~ B3:255/15 B9:0/0 ~ B255:255/15		B:3:0 ~ B3:255 B9:0 ~ B255:255		-
Timer File	Enable	T4:0/ ~ T4:255/ T9:0/ ~ T255:255	EN	T4:0. ~ T4:255. T9:0. ~ T255:255.	-	-
	Timing		TT		-	-
	Done		DN		-	-
	Preset		-		PRE	-
	Accumulated		-		ACC	-
Counter File	Up Enable	C5:0/ ~ C5:255/ C9:0/ ~ C255:255/	CU	C5:0. ~ C5:255. C9:0. ~ C255:255.	-	-
	Down Enable		CD		-	-
	Done		DN		-	-
	Overflow		OV		-	-
	Underflow		UN		-	-
	Update Acc		UA		-	-
	Preset		-		PRE	-
	Accumulated		-		ACC	-
Control File	Enable	6:0/ ~ R6:255/ R9:0/ ~ R255:255/	EN	R6:0. ~ R6:255. R9:0. ~ R255:255.	-	-
	Enable Unload		EU		-	-
	Done		DN		-	-
	Empty		EM		-	-
	Error		ER		-	-
	Unload		UL		-	-
	Inhibit Comp.		IN		-	-
	Found		FD		-	-
	Length		-		LEN	-
	Position		-		POS	-
Integer File		N7:0/0 ~ N7:255/15 N9:0/0 ~ N255:255/15		N7:0 ~ N7:255 N9:0 ~ N255:255		-
Floating Point File		-		F8:0 ~ F8:255 F9:0 ~ F255:255		32 Bit
String File		-		ST9:0 ~ ST255:255		-
LONG File		-		L9:0 ~ L255:255		32 Bit

Notice

(1) Suggestion

► In the case of applying unavailable address, Error occurs: 0x10

► F, ST, L files can not be added under MicroLogix1000series (can be added under MicroLogix1200, MicroLogix1500 series).

Chap.18 MODBUS RTU PROTOCOL(Slave)

MODBUS RTU Slave Driver is available since V1.05 so if you use the previous version, please apply XP-Builder and XGT Panel software that are beyond V1.05 from our web-site.

For protocol outline and wiring, refer to Chap.12 'MODBUS RTU Protocol (Master).

18.1 Communication Setting

XGT Panel can be connected to various devices that adopts MODBUS(RTU) communication through RS-232C, RS-422/485.
Setting methods are different depending on the manufacturer so for more details, refer to each device manual.
The description with the example of LS Industrial Systems XGT Panel will be provided hereupon.

18.1.1 The example of PLC(XGT) setting

The communication parameter of PLC(XGT) can be set at XG-PD.

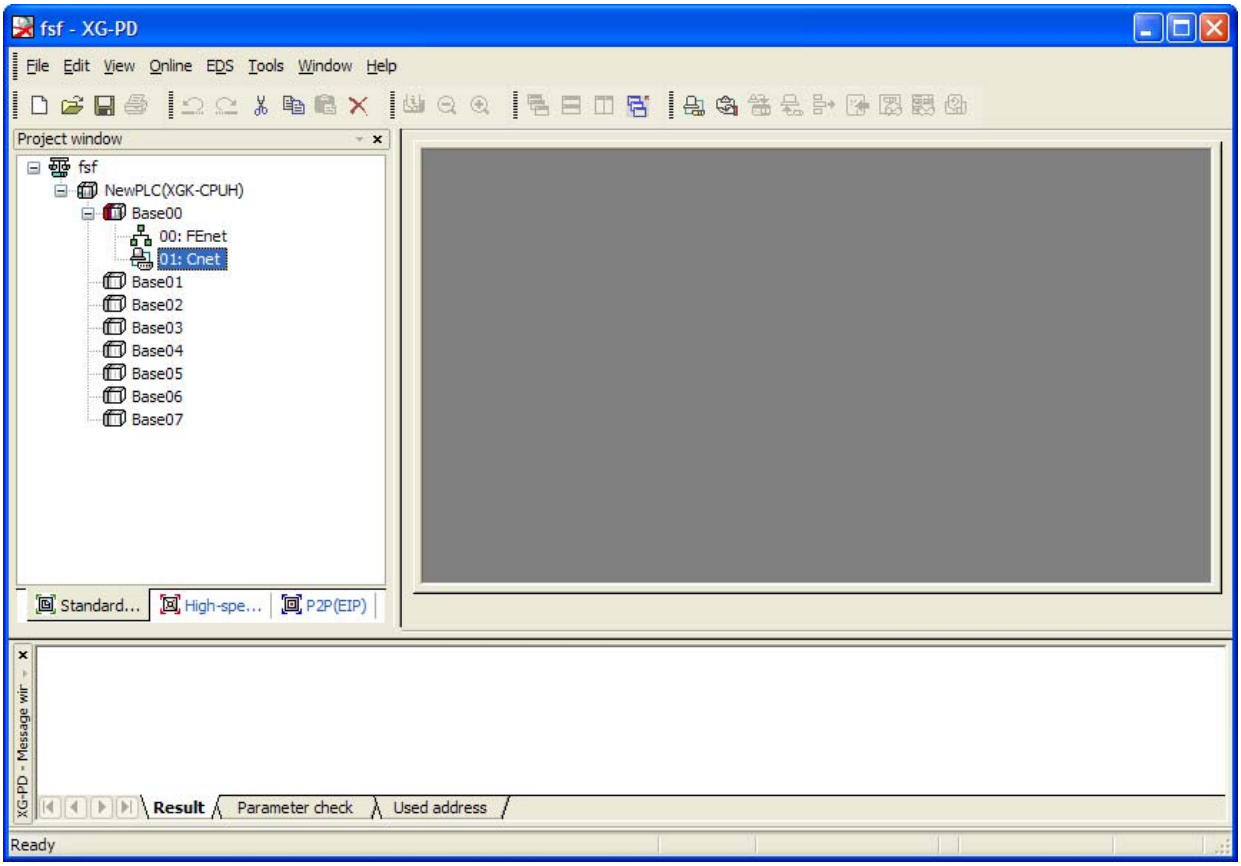

(1) Connection Setting
Select Online->Connection Setting.
After setting connection options for user environment, click Connection.

(2) Reading I/O Data
Select Online->Reading I/O Data to interpret the information of module embedded in the current base.

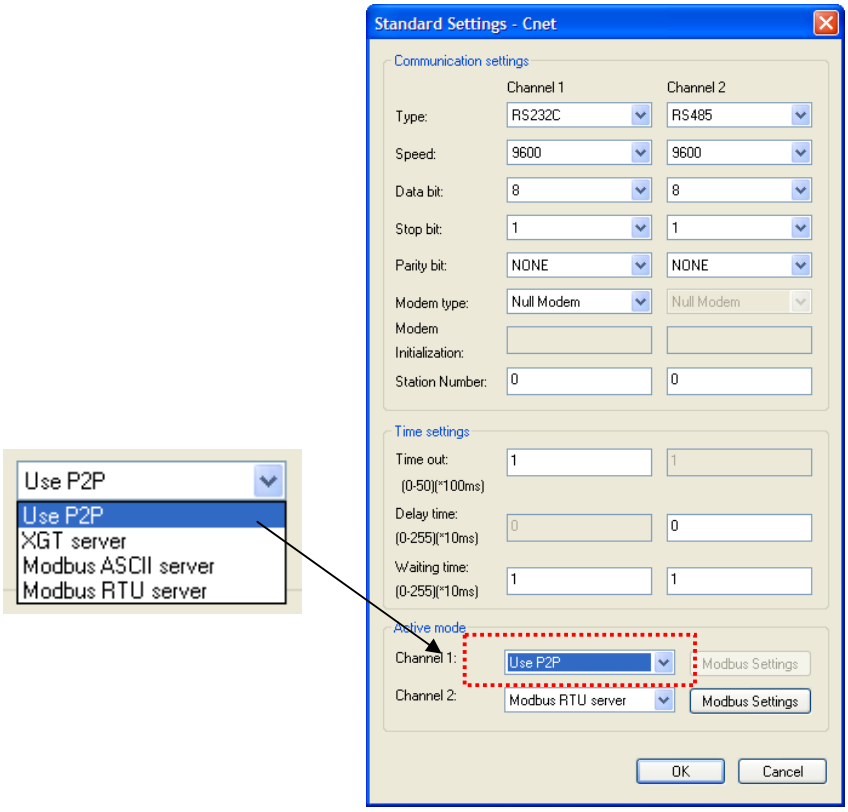

(3) Double-click the Cnet I/F module to execute the basic setting screen and establish communication mode, communication speed, modem type, data bit, stop bit, unit No. of connection setting menu.

(4) Select 'Using P2P' for operation mode.

(5) P2P Setting

(a) Select 'P2P' tab from a project screen.

(b) Select communication module type, base, slot for setting P2P parameters as below.

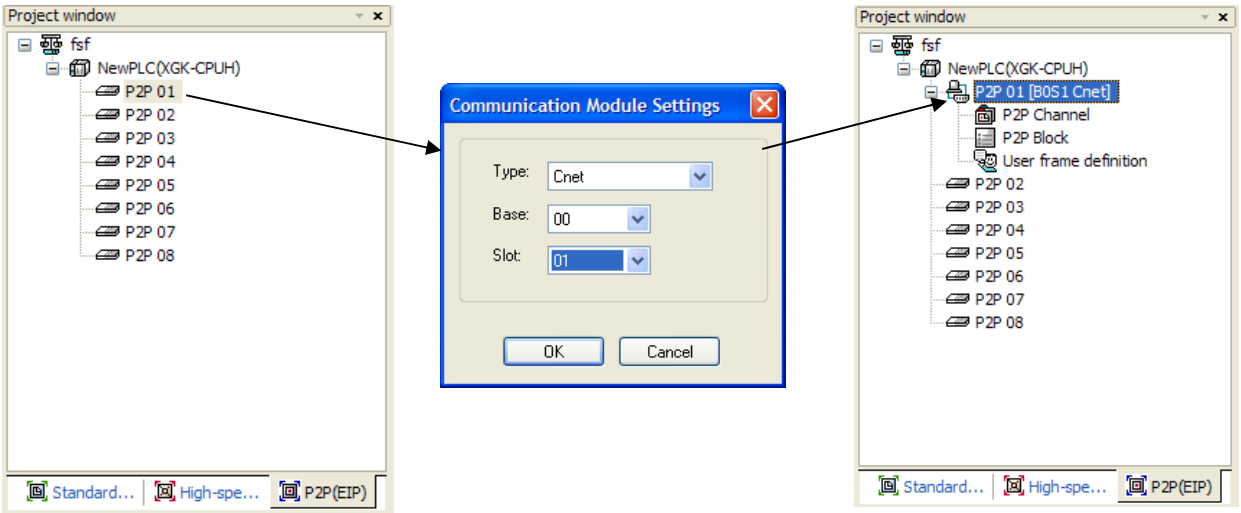

(c) After selecting P2P channel, set P2P driver as 'MODBUS RTU Client'.

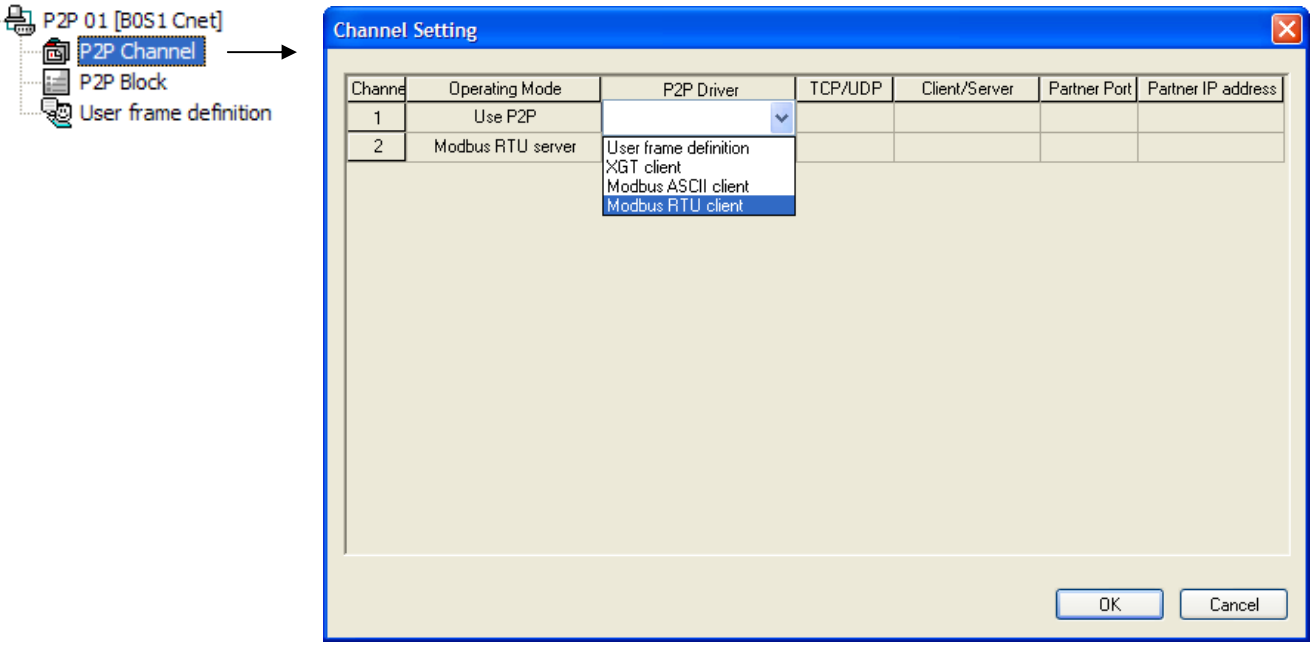

(d) After selecting P2P block, establish channel, function, operation conditions and method, data type, data size, unit No., address, etc. as below. For more details on this, refer to 'XGT Series Cnet I/F Module Manual'.

Index	Ch.	Driver Setting	P2P function	Conditional flag	Command type	Data type	No. of variables	Data size	Destination station	Destination station number	Frame	Setting	Variable setting contents
0	1	Modbus RTU client	READ	F00093	Single	WORD	1		☑	0		Setting	Number :1 READ1:0x30000,SAVE1:D00000
1	1	Modbus RTU client	WRITE	F00093	Continuous	WORD	1	6	☑	0		Setting	Number :1 READ1:D00100,SAVE1:0x40000

(6) If parameter setting is completed, proceed with 'Online->Writing Parameter->Enable link' and reset module or PLC.

18.1.2 XGT Panel Setting

You can set the communication setting of XGT Panel with XP-Builder.

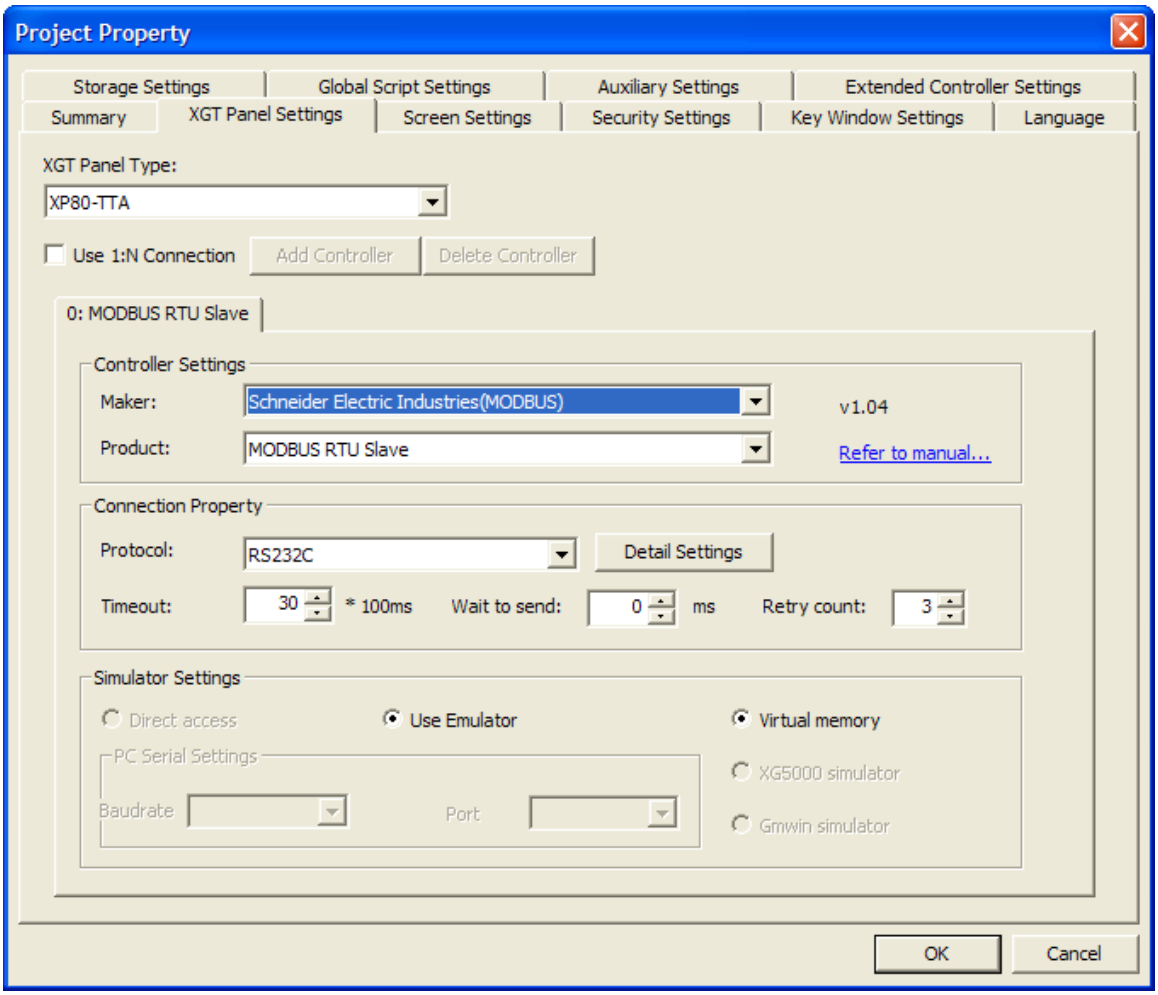

(1) Setting controller

Select Schneider Electric Industry for the manufacturer and for the item, select MODBUS RTU Slave.

(2) Connection Property

Select the proper connection type for your own working environment.

(3) Setting detailed connection option

Select the proper transmission speed, data bit, parity, stop bit for your own working environment.

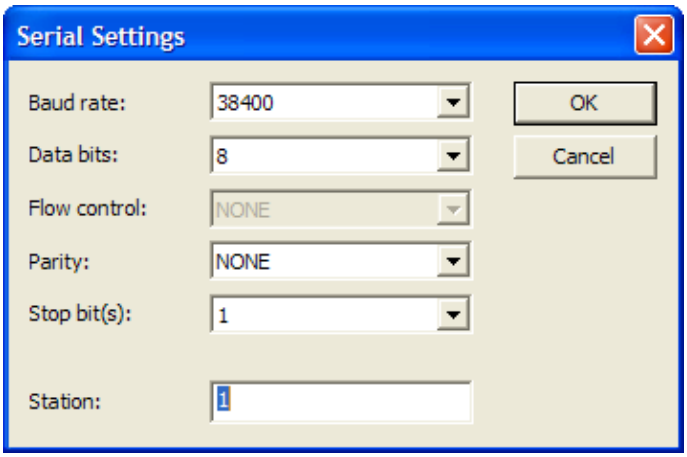

The unit No. is the opposite device's No. that is under MODBUS communication. If you have wrong unit No. during communication, XGT Panel does not response properly. Furthermore, XGT Panel is set as slave so communication error message is not displayed when communication is disconnected or unstable.
If there is no menu to set unit No. at PLC or PLC communication module, set the unit No. as '0' at XP-Builder.

(4) Download established communication details to XGT Panel.

Notice

(1) Suggestions
► In the case of communication error, check if the parameters including transmission speed and data bit are correct.

18.2 Available Device

18.2.1 Device Area

MODBUS RTU Slave applies internal device of XGT Panel without setting device separately.

Input/output type	Data type	Reading/Writing	Device Area	Remarks
Output contacts	Bit	Reading/Writing	HW0.0 ~ HW1023.F	
Input contacts	Bit	Reading only	HS0.0 ~ HS1023.F	
Output register	Word	Reading only	HS0 ~ HS1023	
Input register	Word	Reading/Writing	HW0 ~ HW1023	

Notice

(1) Suggestions

► XGT Panel has the same HW area for bit/word device.
► HS Device is for reading only so random so a random value can not be written.
► Device is fixed so you can not change it your own discretion.

18.2.2 HS Device

(1) Bit Device

Device Address	Property	Function	Property and Description
HS0000.0	Reading	On all the time	Maintaining 1 all the time
HS0000.1	Reading	Off all the time	Maintaining 0 all the time
HS0000.2	Reading	Caps Lock status	0: Small letter 1: Capital letter
HS0000.3 ~ 5	Prohibited	-	-
HS0000.6	Reading	200ms Cycle On/Off Timer	Repeating 200ms '0' → 200ms '1' → 200ms '0'
HS0000.7	Reading	1seconds Cycle On/Off Timer	Repeating 1seconds '0' → 1seconds '1' → 1seconds '0'
HS0000.8	Reading	2seconds Cycle On/Off Timer	Repeating 2seconds '0' → 2seconds '1' → 2seconds '0'
HS0000.9	Reading	5seconds Cycle On/Off Timer	Repeating 5seconds '0' → 5seconds '1' → 5seconds '0'
HS0000.A	Reading	10seconds Cycle On/Off Timer	Repeating 10seconds '0' → 10seconds '1' → 10seconds '0'
HS0000.B	Reading	30seconds Cycle On/Off Timer	Repeating 30seconds '0' → 30seconds '1' → 30seconds '0'
HS0000.C	Reading	60seconds Cycle On/Off Timer	Repeating 60seconds '0' → 60seconds '1' → 60seconds '0'
HS0000.D ~ F	Prohibited	-	-

(2) Word Device

Device Address	Property	Function	Property and Description
HS0001	Reading	XGT Panel S/W version information (upper)	In the case of V1.04, '1' is displayed.
HS0002	Reading	XGT Panel S/W version information (lower)	In the case of V1.04, '4' is displayed.
HS0003	Prohibited	-	-
HS0004	Reading	Date information (Year)	2007 is displayed as '2007'
HS0005	Reading	Date information (Month)	Dec. is displayed as '12'(the value between 1 and 12)
HS0006	Reading	Date information (Day)	The 4th is displayed a s '4' (the value between 1 and 31)
HS0007	Reading	Time information (Hour)	11 A.M. is displayed as '11'(the value between 0 and 23)
HS0008	Reading	Time information (Minute)	25 minutes is displayed as '25' (the value between 0 and 59)
HS0009	Reading	Time information (Second)	55 seconds is displayed as '55' (the value between 0 and 59)
HS0010	Reading	Current base screen No.	The basic screen No. set by XP-Builder(the value between 1 and 4095) 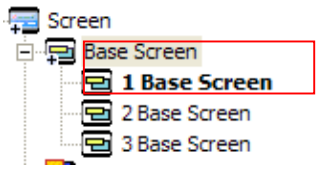
HS0011	Reading	The screen No. of the current Global Windows 1	The screen No. set by Global Windows 1 (the value between 0 and 4090) 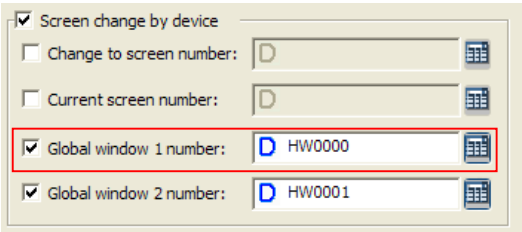
HS0012	Reading	The screen No. of the current Global Windows 2	The screen No. set by Global Windows 2 (the value between 0 and 4090) 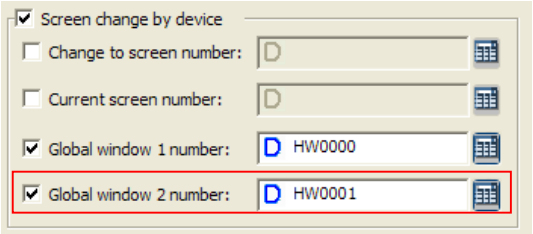
HS0013	Reading	Current Security Level	Current security level vale (between 0~9)
HS0014	Reading	Usually '0'	It displays 0 all the time
HS0015	Reading	500ms counter	1 increases every 500ms (the value between 0 and 65535)
HS0016	Reading	1 second counter	1 increases every 1 second (the value between 0 and 65535)
HS0017	Reading	2 seconds counter	1 increases every 2 seconds (the value between 0 and 65535)
HS0018	Reading	5 seconds counter	1 increases every 5 seconds (the value between 0 and 65535)
HS0019	Reading	10 seconds counter	1 increases every 10 seconds (the value between 0 and 65535)

(3) Device related communication

Device Address	Property	Function	Property and Description
HS800	Reading	Frequency of transmitting data connected to No.0 (32Bit)	The number of transmitting data of the controller connected to No.0
HS802	Reading	Frequency of transmitting data connected to No.0 (32Bit)	The number of transmitting data of the controller connected to No.0
HS804	Reading	Frequency of error connected to No.0 (32Bit)	The number of transmitting data of the controller connected to No.0
HS820	Reading	Frequency of transmitting data connected to No.1(32Bit)	The number of transmitting data of the controller connected to No.1
HS822	Reading	Frequency of receiving data connected to No.1(32Bit)	The number of receiving data of the controller connected to No.1
HS824	Reading	Frequency of error connected to No.1(32Bit)	The number of data errors of the controller connected to No.1
HS840	Reading	Frequency of transmitting data connected to No.2(32Bit)	The number of transmitting data of the controller connected to No.2
HS842	Reading	Frequency of receiving data connected to No.2	The number of receiving data of the controller connected to No.2
HS844	Reading	Frequency of error connected to No.2(32Bit)	The number of data errors of the controller connected to No.2
HS860	Reading	Frequency of transmitting data connected to No.3(32Bit)	The number of transmitting data of the controller connected to No.3
HS862	Reading	Frequency of receiving data connected to No.3 (32Bit)	The number of receiving data of the controller connected to No.3
HS864	Reading	Frequency of error connected to No.3(32Bit)	The number of data errors of the controller connected to No.3
HS0910	Reading	Communication scan time connected to No.0	Communication scan time connected to No.0
HS0911	Reading	Communication scan time connected to No.1	Communication scan time connected to No.1
HS0912	Reading	Communication scan time connected to No.2	Communication scan time connected to No.2
HS0913	Reading	Communication scan time connected to No.3	Communication scan time connected to No.3
HS0970.0	Bit Reading	communication timeout connected to No.0	In case that communication time out occurs from No.0, '1'
HS0970.1	Bit Reading	Communication NAK signal connected to No.0	In case that NAK signal is generated from the controller connected to No.0, '1'
HS0971	Reading	Frequency of timeouts connected to No.0	The number of timeouts generated from No.0
HS0972	Reading	Frequency of the Maximum Retires connected to No.0	The number of the maximum Retires generated continuously from No. 0
HS0973	Reading	Frequency of Retires connected to No.0	The number of Retires generated from No. 0
HS0974	Reading	Frequency of the Maximum timeouts connected to No.0	The number of the maximum timeouts generated continuously from No.0
HS0975.0	Bit Reading	communication timeout connected to No.1	In case that communication time out occurs from No.1, '1'
HS0975.1	Bit Reading	Communication NAK signal connected to No.1	In case that NAK signal is generated from the controller connected to No.1, '1'
HS0976	Reading	Frequency of timeouts connected to No.1	The number of timeouts generated from No.1
HS0977	Reading	Frequency of the Maximum Retires connected to No.1	The number of the maximum Retires generated continuously from No. 1
HS0978	Reading	Frequency of Retires connected to No.1	The number of Retires generated from No. 0
HS0979	Reading	Frequency of the Maximum timeouts connected to No.1	The number of the maximum timeouts generated continuously from No.1
HS0980.0	Bit Reading	communication timeout connected to No.2	In case that communication time out occurs from No.2, '1'
HS0980.1	Bit Reading	Communication NAK signal connected to No.2	In case that NAK signal is generated from the controller connected to No.2, '1'
HS0981	Reading	Frequency of timeouts connected to No.2	The number of timeouts generated from No.2
HS0982	Reading	Frequency of the Maximum Retires connected to No.2	The number of the maximum Retires generated continuously from No. 2
HS0983	Reading	Frequency of Retires connected to No.2	The number of Retires generated from No. 2
HS0984	Reading	Frequency of the Maximum timeouts connected to No.2	The number of the maximum timeouts generated continuously from No.2
HS0985.0	Bit Reading	communication timeout connected to No.3	In case that communication time out occurs from No.3, '1'
HS0985.1	Bit Reading	Communication NAK signal connected to No.3	In case that NAK signal is generated from the controller connected to No.3, '1'
HS0986	Reading	Frequency of timeouts connected to No.3	The number of timeouts generated from No.3
HS0987	Reading	Frequency of the Maximum Retires connected to No.3	The number of the maximum Retires generated continuously from No. 3
HS0988	Reading	Frequency of Retires connected to No.3	The number of Retires generated from No. 3
HS0989	Reading	Frequency of the Maximum timeouts connected to No.3	The number of the maximum timeouts generated continuously from No.3

(4) System Alarm Device

Device Address	Property	Function	Property and Description
HS0950.0	Reading	Battery low voltage Alarm	0: Normal 1: Alarm
HS0950.1	Reading	NVRAM Data Error	0: Normal 1: Alarm
HS0950.2~7	Prohibited	-	-
HS0950.8	Reading	USB over-current alarm	0: Normal 1: Alarm
HS0950.9~F	Prohibited	-	-
HS0951.0	Reading	No Logging backup Device	0: Normal 1: No Device
HS0951.1	Reading	No Recipe backup Device	0: Normal 1: No Device
HS0951.2	Reading	No Screen backup Device	0: Normal 1: No Device
HS0951.3	Reading	No Alarm backup Device	0: Normal 1: No Device
HS0951.4	Reading	Print is not connected	0: Normal 1: No connection
HS0951.5~F	Prohibited	-	-

Chap.19 MODBUS TCP/IP Protocol (Slave)

MODBUS TCP/IP Slave Driver is available since V1.05 so if you use the previous version, please apply XP-Builder and XGT Panel software that are beyond V1.05 from our web-site.

For protocol outline and wiring, refer to Chap.13 'MODBUS TCP/IP Protocol (Master).

19.1 Communication Setting

XGT Panel can be connected to various devices that adopts MODBUS(TCP/IP)communication through Ethernet.
Setting methods are different depending on the manufacturer so for more details, refer to each device manual.
The description with the example of LS Industrial Systems XGT PLC will be provided hereupon.

19.1.1 The example of PLC(XGT) setting

The communication parameter of PLC(XGT) can be set at XG-PD.

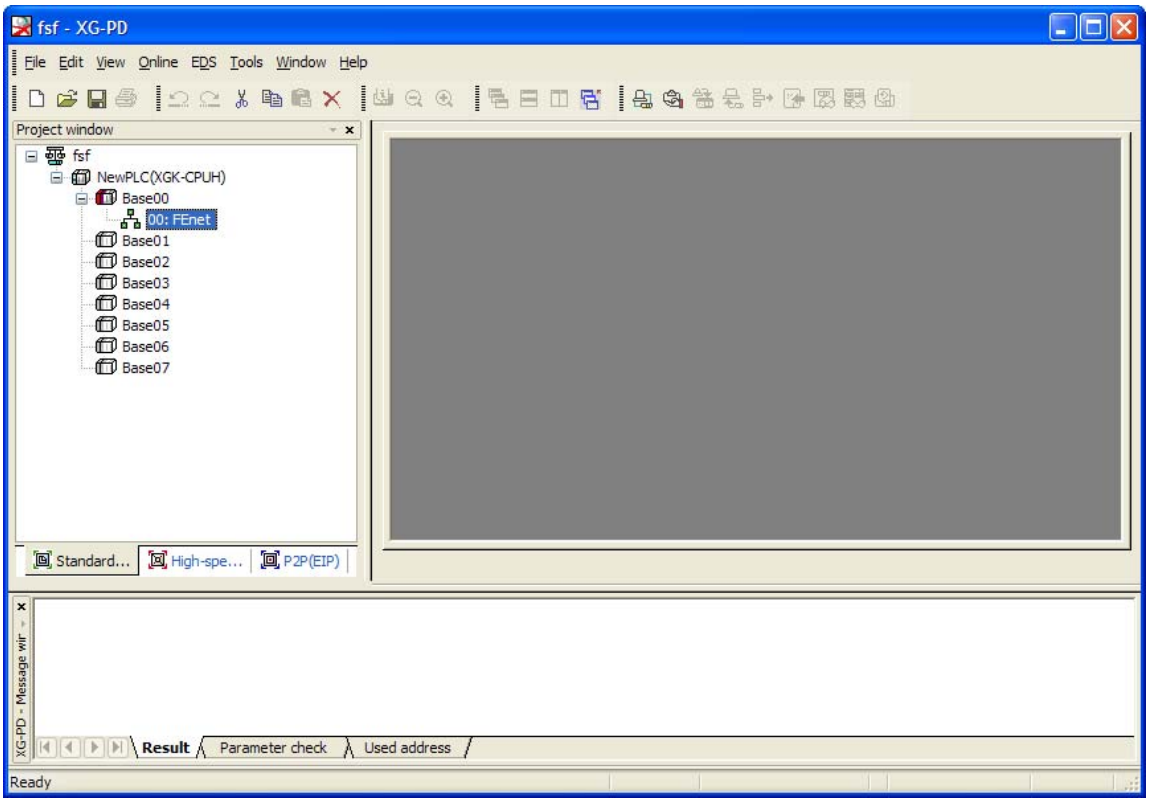

(1) Connection Setting
Select Online->Connection Setting.
After setting connection options for user environment, click Connection.

(2) Reading I/O Data
Select Online->Reading I/O Data to interpret the information of module embedded in the current base.

(3) Double-click the FEnet I/F module to execute the basic setting screen and establish IP address and driver. Set 'XGT Server' for the driver.

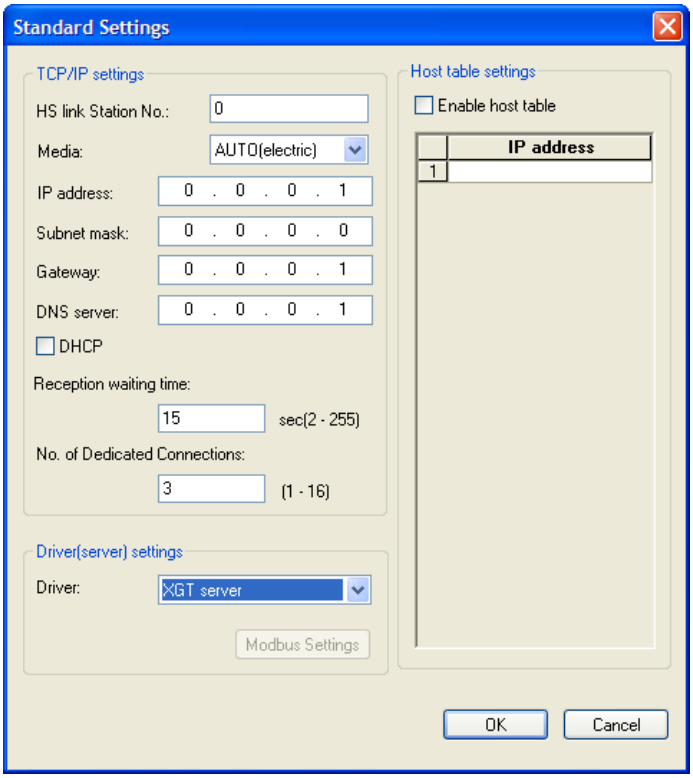

(4) Select 'Using P2P' for operation mode.

(5) P2P Setting

(a) Select 'P2P' tab from a project screen.

(b) Select communication module type, base, slot for setting P2P parameters as below.

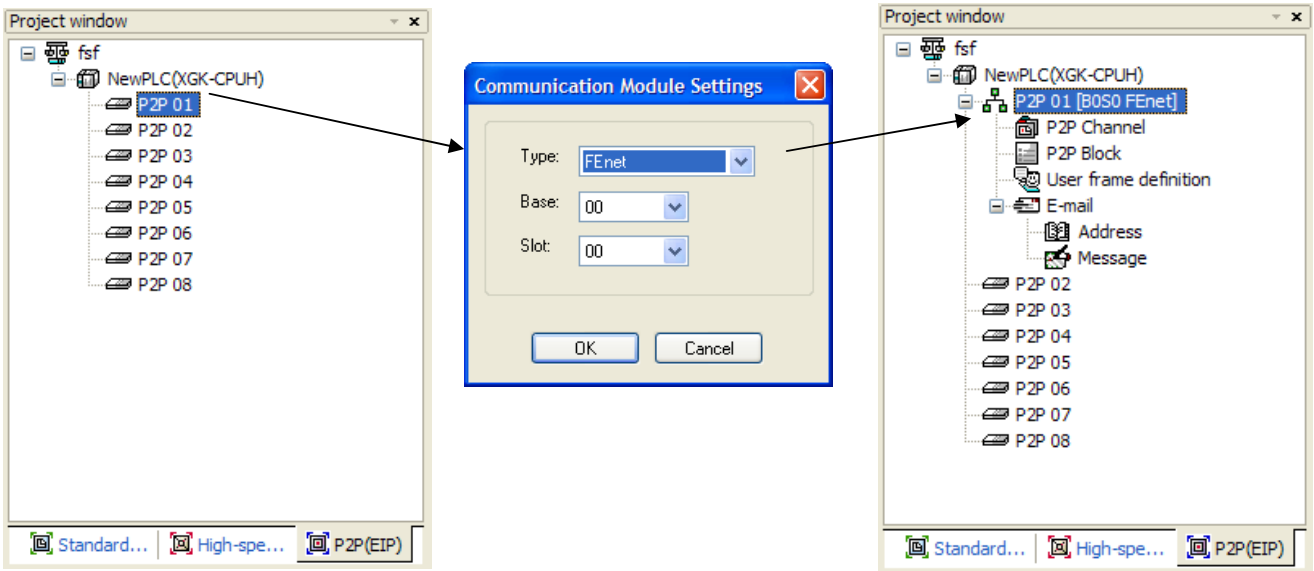

(c) After selecting P2P channel, set P2P driver as 'MODBUS RTU Client'.

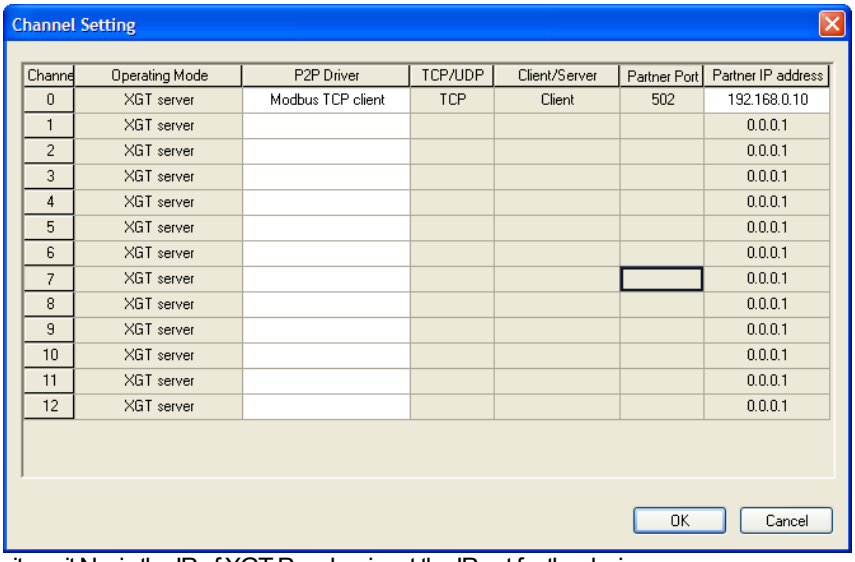

Channe	Operating Mode	P2P Driver	TCP/UDP	Client/Server	Partner Port	Partner IP address
0	XGT server	Modbus TCP client	TCP	Client	502	192.168.0.10
1	XGT server					0.0.0.1
2	XGT server					0.0.0.1
3	XGT server					0.0.0.1
4	XGT server					0.0.0.1
5	XGT server					0.0.0.1
6	XGT server					0.0.0.1
7	XGT server					0.0.0.1
8	XGT server					0.0.0.1
9	XGT server					0.0.0.1
10	XGT server					0.0.0.1
11	XGT server					0.0.0.1
12	XGT server					0.0.0.1

The IP address of opposite unit No. is the IP of XGT Panel so input the IP set for the device.
The port No. of XGT FEnet I/F Module is fixed so if you use other maker, adjust the port No.

(d) After selecting P2P block, establish channel, function, operation conditions and method, data type, data size, unit No., address, etc. as below. For more details on this, refer to 'XGT Series Cnet I/F Module Manual'.

Index	E-mail	Ch.	Driver Setting	P2P function	Conditional flag	Command type	Data type	No. of variables	Data size	Destination station	Destination station number	Frame	Setting	Variable setting contents
0	☐	0	Modbus TCP client	READ	F00092	Continuous	WORD	1	3	☑	1		Setting	Number :1 READ1:0x30000,SAVE1:D00000
1	☐	0	Modbus TCP client	WRITE	F00092	Continuous	WORD	1	3	☑	1		Setting	Number :1 READ1:D00100,SAVE1:0x40000

(6) If parameter setting is completed, proceed with 'Online->Writing Parameter->Enable link' and reset module or PLC.

19.1.2 XGT Panel Setting

You can set the communication setting of XGT Panel with XP-Builder.

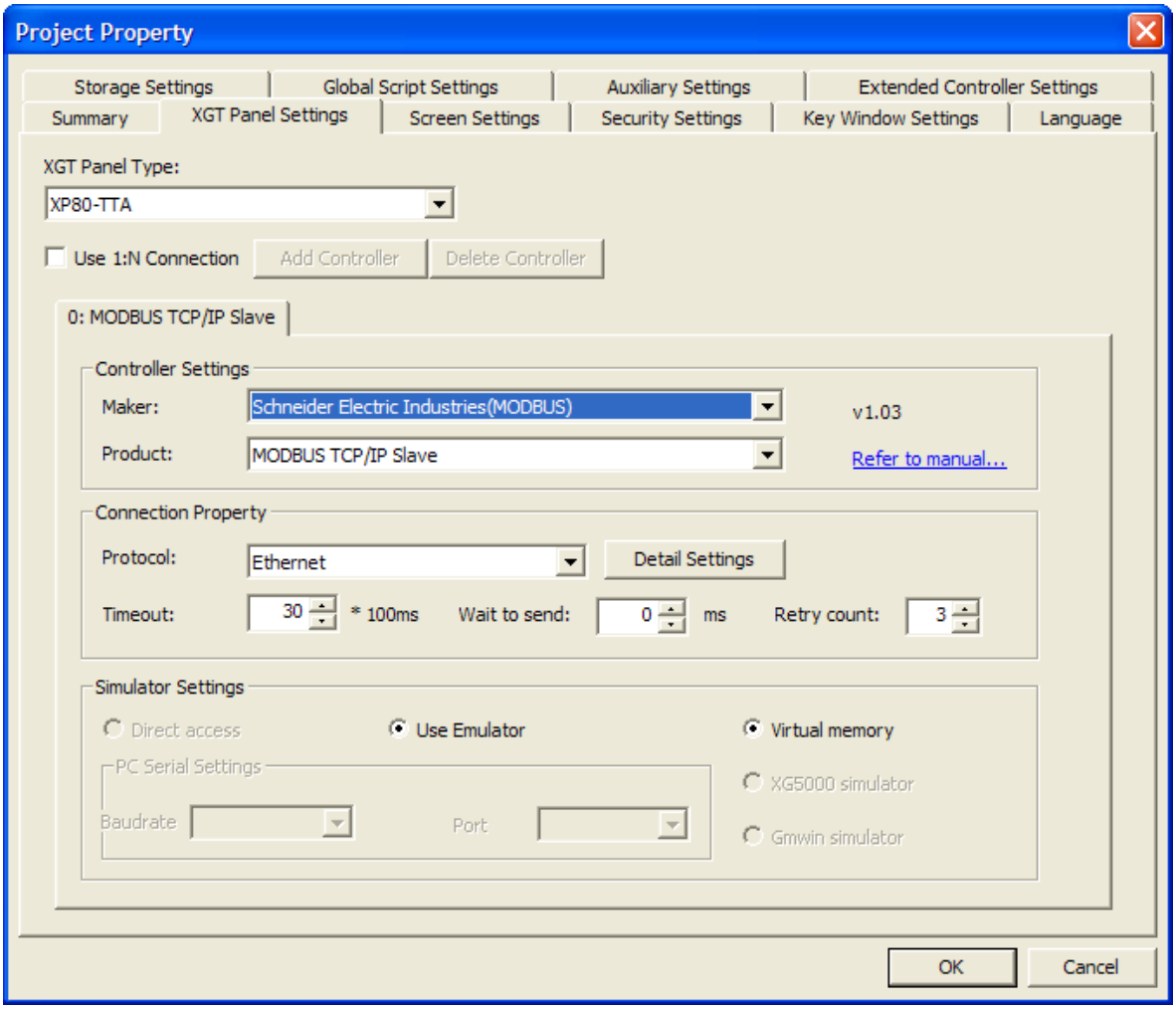

(1) Setting controller

Select Schneider Electric Industry for the manufacturer and for the item, select MODBUS RTU Slave.

(2) Connection Property

Select the proper connection type for your own working environment.

(3) Setting detailed connection option

Input the port of opposite device for local port. The local port for XGT is 502 as below.
The unit No. is the opposite device's No. that is under MODBUS communication. If you have wrong unit No. during communication, XGT Panel does not response properly. Furthermore, XGT Panel is set as slave so communication error message is not displayed when communication is disconnected or unstable.
If there is no menu to set unit No. at PLC or PLC communication module, set the unit No. as '0' at XP-Builder.

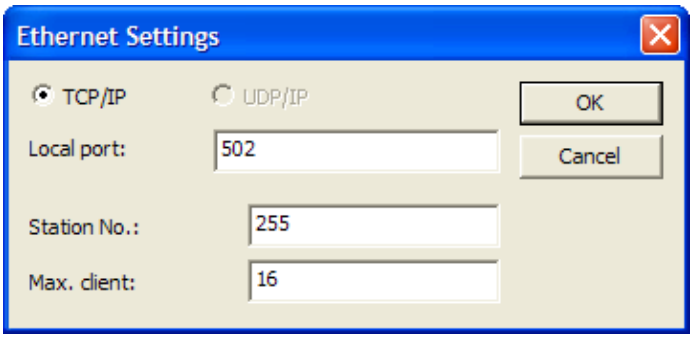

XGT Panel acts as a server so synchronous connection is available through Ethernet. Set the allowable number of synchronous connections as 1~16.

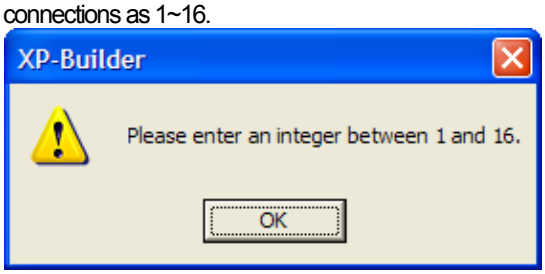

(4) Download established communication details to XGT Panel.

Notice

(1) Suggestions

►In the case of communication error, check the port No., IP, unit No.

►If the device for synchronous connection exceeds the allowable range, communication of the opposite device may be interrupted intermittently so connect to it within limitation.

19.2 Available Device

19.2.1 Device Area

MODBUS TCP/IP Slave applies internal device of XGT Panel without setting device separately.

Input/output type	Data type	Reading/Writing	Device Area	Remarks
Output contacts	Bit	Reading/Writing	HW0.0 ~ HW1023.F	
Input contacts	Bit	Reading only	HS0.0 ~ HS1023.F	
Output register	Word	Reading only	HS0 ~ HS1023	
Input register	Word	Reading/Writing	HW0 ~ HW1023	

Notice

1) Suggestions
- ► XGT Panel has the same HW area for bit/word device.
- ► HS Device is for reading only so random so a random value can not be written.
- ► The device is fixed so you can not change it your own discretion.

19.2.2 HS Device

(1) Bit Device

Device Address	Property	Function	Property and Description
HS0000.0	Reading	On all the time	Maintaining 1 all the time
HS0000.1	Reading	Off all the time	Maintaining 0 all the time
HS0000.2	Reading	Caps Lock status	0: Small letter 1: Capital letter
HS0000.3 ~ 5	Prohibited	-	-
HS0000.6	Reading	200ms Cycle On/Off Timer	Repeating 200ms '0' → 200ms '1' → 200ms '0'
HS0000.7	Reading	1seconds Cycle On/Off Timer	Repeating 1seconds '0' → 1seconds '1' → 1seconds '0'
HS0000.8	Reading	2seconds Cycle On/Off Timer	Repeating 2seconds '0' → 2seconds '1' → 2seconds '0'
HS0000.9	Reading	5seconds Cycle On/Off Timer	Repeating 5seconds '0' → 5seconds '1' → 5seconds '0'
HS0000.A	Reading	10seconds Cycle On/Off Timer	Repeating 10seconds '0' → 10seconds '1' → 10seconds '0'
HS0000.B	Reading	30seconds Cycle On/Off Timer	Repeating 30seconds '0' → 30seconds '1' → 30seconds '0'
HS0000.C	Reading	60seconds Cycle On/Off Timer	Repeating 60seconds '0' → 60seconds '1' → 60seconds '0'
HS0000.D ~ F	Prohibited	-	-

(2) Word Device

Device Address	Property	Function	Property and Description
HS0001	Reading	XGT Panel S/W version information (upper)	In the case of V1.04, '1' is displayed.
HS0002	Reading	XGT Panel S/W version information (lower)	In the case of V1.04, '4' is displayed.
HS0003	Prohibited	-	-
HS0004	Reading	Date information (Year)	2007 is displayed as '2007'
HS0005	Reading	Date information (Month)	Dec. is displayed as '12'(the value between 1 and 12)
HS0006	Reading	Date information (Day)	The 4th is displayed a s '4' (the value between 1 and 31)
HS0007	Reading	Time information (Hour)	11 A.M. is displayed as '11'(the value between 0 and 23)
HS0008	Reading	Time information (Minute)	25 minutes is displayed as '25' (the value between 0 and 59)
HS0009	Reading	Time information (Second)	55 seconds is displayed as '55' (the value between 0 and 59)
HS0010	Reading	Current basic screen No.	The basic screen No. set by XP-Builder(the value between 1 and 4095) 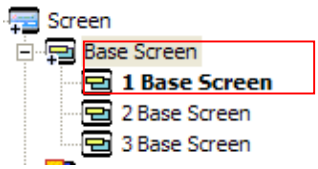
HS0011	Reading	The screen No. of the current Global Windows 1	The screen No. set by Global Windows 1 (the value between 0 and 4090) 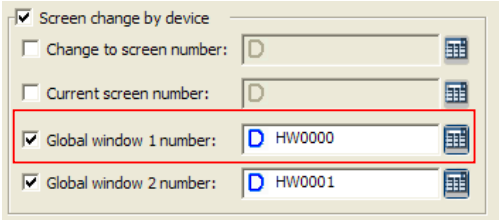
HS0012	Reading	The screen No. of the current Global Windows 2	The screen No. set by Global Windows 2 (the value between 0 and 4090) 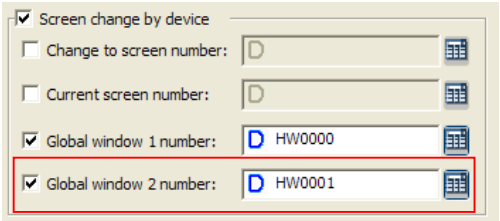
HS0013	Reading	Current Security Level	Current security level vale (between 0~9)
HS0014	Reading	Usually '0'	It displays 0 all the time
HS0015	Reading	500ms counter	1 increases every 500ms (the value between 0 and 65535)
HS0016	Reading	1 second counter	1 increases every 1 second (the value between 0 and 65535)
HS0017	Reading	2 seconds counter	1 increases every 2 seconds (the value between 0 and 65535)
HS0018	Reading	5 seconds counter	1 increases every 5 seconds (the value between 0 and 65535)
HS0019	Reading	10 seconds counter	1 increases every 10 seconds (the value between 0 and 65535)

(3) Device related communication

Device Address	Property	Function	Property and Description
HS800	Reading	Frequency of transmitting data connected to No.0 (32Bit)	The number of transmitting data of the controller connected to No.0
HS802	Reading	Frequency of transmitting data connected to No.0 (32Bit)	The number of transmitting data of the controller connected to No.0
HS804	Reading	Frequency of error connected to No.0 (32Bit)	The number of transmitting data of the controller connected to No.0
HS820	Reading	Frequency of transmitting data connected to No.1(32Bit)	The number of transmitting data of the controller connected to No.1
HS822	Reading	Frequency of receiving data connected to No.1(32Bit)	The number of receiving data of the controller connected to No.1
HS824	Reading	Frequency of error connected to No.1(32Bit)	The number of data errors of the controller connected to No.1
HS840	Reading	Frequency of transmitting data connected to No.2(32Bit)	The number of transmitting data of the controller connected to No.2
HS842	Reading	Frequency of receiving data connected to No.2	The number of receiving data of the controller connected to No.2
HS844	Reading	Frequency of error connected to No.2(32Bit)	The number of data errors of the controller connected to No.2
HS860	Reading	Frequency of transmitting data connected to No.3(32Bit)	The number of transmitting data of the controller connected to No.3
HS862	Reading	Frequency of receiving data connected to No.3 (32Bit)	The number of receiving data of the controller connected to No.3
HS864	Reading	Frequency of error connected to No.3(32Bit)	The number of data errors of the controller connected to No.3
HS0910	Reading	Communication scan time connected to No.0	Communication scan time connected to No.0
HS0911	Reading	Communication scan time connected to No.1	Communication scan time connected to No.1
HS0912	Reading	Communication scan time connected to No.2	Communication scan time connected to No.2
HS0913	Reading	Communication scan time connected to No.3	Communication scan time connected to No.3
HS0970.0	Bit Reading	communication timeout connected to No.0	In case that communication time out occurs from No.0, ‘1’
HS0970.1	Bit Reading	Communication NAK signal connected to No.0	In case that NAK signal is generated from the controller connected to No.0, ‘1’
HS0971	Reading	Frequency of timeouts connected to No.0	The number of timeouts generated from No.0
HS0972	Reading	Frequency of the Maximum Retires connected to No.0	The number of the maximum Retires generated continuously from No. 0
HS0973	Reading	Frequency of Retires connected to No.0	The number of Retires generated from No. 0
HS0974	Reading	Frequency of the Maximum timeouts connected to No.0	The number of the maximum timeouts generated continuously from No.0
HS0975.0	Bit Reading	communication timeout connected to No.1	In case that communication time out occurs from No.1, ‘1’
HS0975.1	Bit Reading	Communication NAK signal connected to No.1	In case that NAK signal is generated from the controller connected to No.1, ‘1’

Device Address	Property	Function	Property and Description
HS0976	Reading	Frequency of timeouts connected to No.1	The number of timeouts generated from No.1
HS0977	Reading	Frequency of the Maximum Retires connected to No.1	The number of the maximum Retires generated continuously from No. 1
HS0978	Reading	Frequency of Retires connected to No.1	The number of Retires generated from No. 0
HS0979	Reading	Frequency of the Maximum timeouts connected to No.1	The number of the maximum timeouts generated continuously from No.1
HS0980.0	Bit Reading	communication timeout connected to No.2	In case that communication time out occurs from No.2, '1'
HS0980.1	Bit Reading	Communication NAK signal connected to No.2	In case that NAK signal is generated from the controller connected to No.2, '1'
HS0981	Reading	Frequency of timeouts connected to No.2	The number of timeouts generated from No.2
HS0982	Reading	Frequency of the Maximum Retires connected to No.2	The number of the maximum Retires generated continuously from No. 2
HS0983	Reading	Frequency of Retires connected to No.2	The number of Retires generated from No. 2
HS0984	Reading	Frequency of the Maximum timeouts connected to No.2	The number of the maximum timeouts generated continuously from No.2
HS0985.0	Bit Reading	communication timeout connected to No.3	In case that communication time out occurs from No.3, '1'
HS0985.1	Bit Reading	Communication NAK signal connected to No.3	In case that NAK signal is generated from the controller connected to No.3, '1'
HS0986	Reading	Frequency of timeouts connected to No.3	The number of timeouts generated from No.3
HS0987	Reading	Frequency of the Maximum Retires connected to No.3	The number of the maximum Retires generated continuously from No. 3
HS0988	Reading	Frequency of Retires connected to No.3	The number of Retires generated from No. 3
HS0989	Reading	Frequency of the Maximum timeouts connected to No.3	The number of the maximum timeouts generated continuously from No.3

(5) System Alarm Device

Device Address	Property	Function	Property and Description
HS0950.0	Reading	Battery low voltage Alarm	0: Normal 1: Alarm
HS0950.1	Reading	NVRAM Data Error	0: Normal 1: Alarm
HS0950.2~7	Prohibited	-	-
HS0950.8	Reading	USB over-current alarm	0: Normal 1: Alarm
HS0950.9~F	Prohibited	-	-
HS0951.0	Reading	No Logging backup Device	0: Normal 1: No Device
HS0951.1	Reading	No Recipe backup Device	0: Normal 1: No Device
HS0951.2	Reading	No Screen backup Device	0: Normal 1: No Device
HS0951.3	Reading	No Alarm backup Device	0: Normal 1: No Device
HS0951.4	Reading	Print is not connected	0: Normal 1: No connection
HS0951.5~F	Prohibited	-	-

Chap.20 YASKAWA MEMOBUS RTU(Master)

20.1 PLC List

20.1.1 Available Device List

XGT Panel provides YASKAWA MEMOBUS RTU Master protocol and supports YASKAWA motion controller as below.

Device name	CPU Module	Connection mode	Communication type	Connection Module	Remarks
Motion Controller	MP2300	Communication Module	RS-232C	260IF-01 261IF-01 217IF-01 218IF-01	-
		Communication Module	RS-422/485	217IF-01	-
	MP920	Communication Module	RS-232C	260IF-01 261IF-01 217IF-01 218IF-01	-
		Communication Module	RS-422/485	217IF-01	-
	MP940	Connected to CPU Directly	RS-232C RS-422/485	-	-

Notice

(1) Suggestions
- ► For more details on communication, refer to YASKAWA manual.
- ► XGT Panel provides MEMOBUS RTU Master Protocol only so other protocols can not be connected.

20.1.2 Description on Protocol

YASKAWA MEMOBUS RTU Protocol is similar in structure to MODBUS RTU Master Protocol. While the offset value is set as 1 for calculating address under MODBUS Protocol, the offset value for MEMOBUS Protocol is 0.

Function code(Hex)	Usage	Records
01	Reading the status of coil	2000 contacts
02	Reading the status of input relay	2000 contacts
03	Reading the contents of maintaining register	125 words
04	Reading the contents of input register	125 words
05	Changing the status of single coil	1
06	Writing with single maintaining register	1 word
08	Loop-back	-
0F	Changing the status of plural coils	800 contact
10	Writing with maintaining plural register	100 words

20.2 Wiring Diagram

20.2.1 Link Mode

The communication muddle of YASKAWA Motion Controller is divided into RS-232C and RS-422/485.
The following is wiring diagram of RS-232C connection with MP2300.
For connection with other YASKAWA motion controller, refer to YASKAWA motion controller user manual.

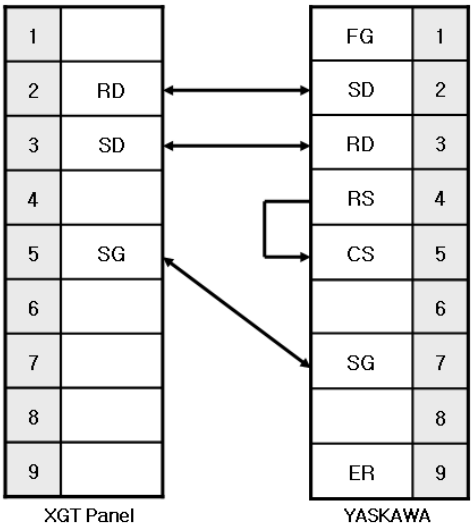

And for RS-422/485 wiring diagram, port configuration may be different according to YASKAWA motion controller so refer to YASKAWA user manual of each module.

Notice

(1) Suggestions
- ► Set the terminator switch of XGT Panel.
- ► A shielded wire is recommended for stable communication. For detailed wiring, refer to YASKAWA motion controller manual.
- ► Port configuration may be different according to YASKAWA motion controller so refer to YASKAWA user manual of each module.

20.3 Communication Setting

20.3.1 Link Mode

For communication setting of YASKAWA motion controller, MPE720 of YASKAWA is used. For detail, refer to YASKAWA user manual.

Setting method is as follows.

(1) After executing MPE720, add the controller folder at [root] → [Group] → [Order] of directory tree.

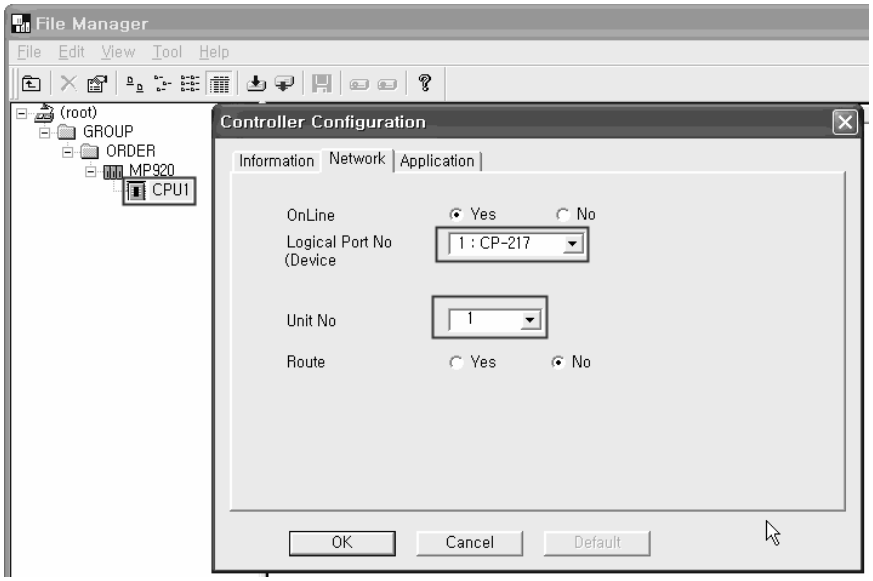

(2) In the Controller Configuration window, set the port number and unit number.
(3) After clicking the right button o mouse at MP920, select Log On.

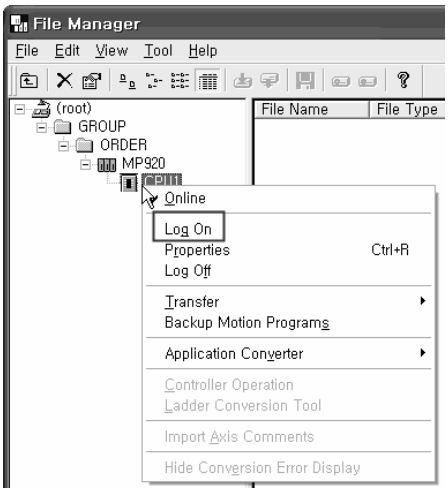

(4) When logging on, input [User name] and [Password]

(5) Double-click [Definition Folder] – [Module Configuration] and open [Engineering Window].

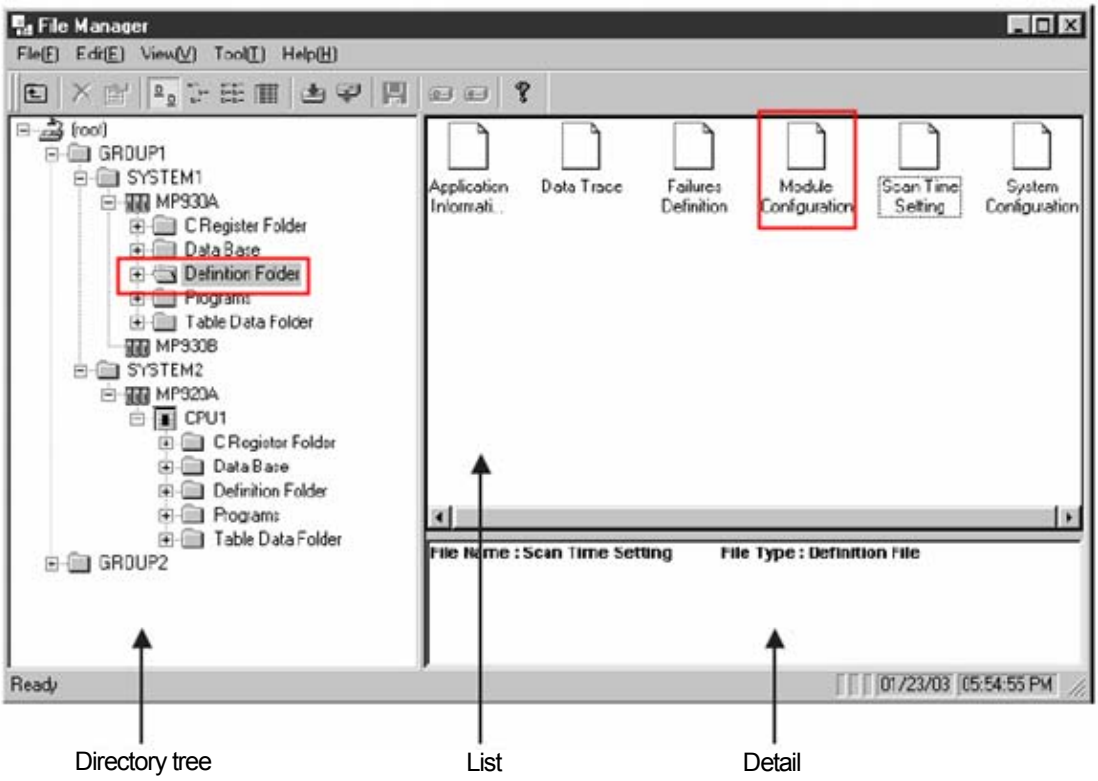

(6) Select the link unit at [Module Type] of [[No.OO] of [Rack1] tap.

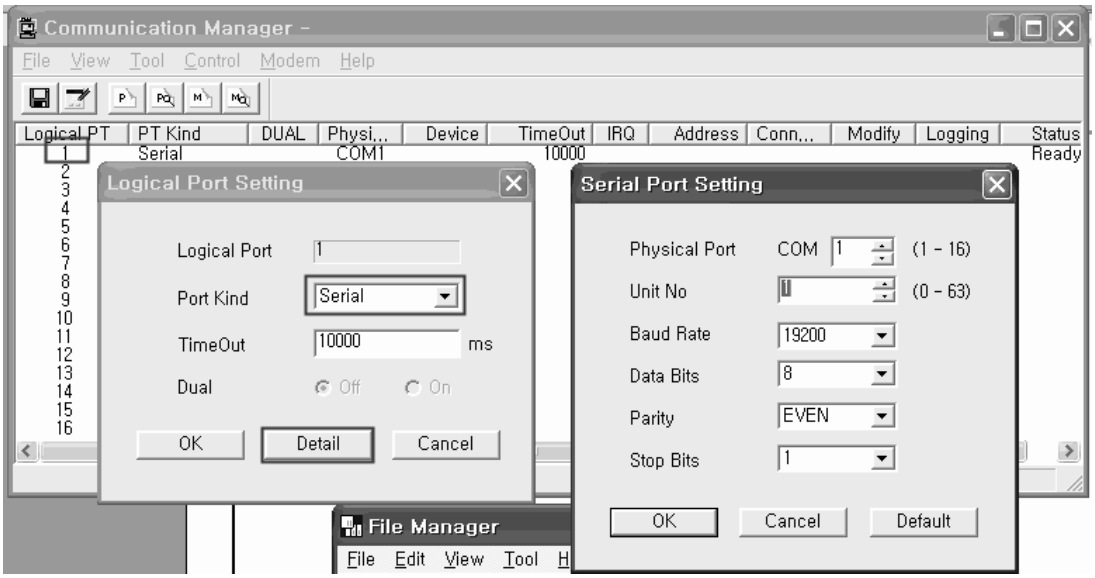

(7) Double-click [No.] where the module is installed, then new window appears. Set the communication parameter as follows.

Setting item	Description
Transmission Protocol	MEMOBUS
Master/Slave	Slave
Device Address	Station number of the connected device
Transmission Mode	RTU
Data Length	8 Bit
Parity Bit	EVEN
Stop Bit	1 Stop
Baud Rate	19200
Sending	None
Automatically Reception	Automatically Reception

Note

(1) For detail, refer to YASKAWA manual
- ► In case [Automatically Reception] is not set as Automatically Reception, ladder program may be needed.
- ► This manual gives you brief description. When setting, refer to YASKAWA manual.

(2) Notice in setting the XP-Builder
- ► When creating the project or setting the communication, set as follows.

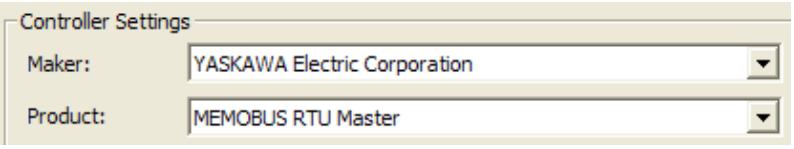

- ► When RS-422/485 is realized as 1:N, it can transmit the data of XGT PLC faster than PLC's response process. Then, for quality of communication, you are required to set transmission waiting time. (Recommended 50~100ms)

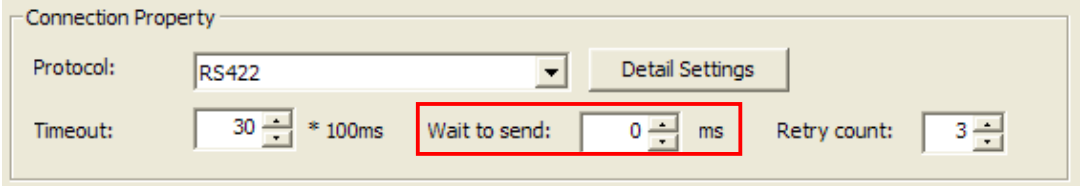

20.4 Available Device

The available devices for XGT Panel are as below.

Area	Bit Contacts	Word Data	Remarks
MB	MB00000 ~ MB4095F	MB0000 ~ MB4095	Coil Device
MW	MW00000.0 ~ MW65535.F	MW00000 ~ MW65535	Holding Register Device
IB	IB00000 ~ IB0FFFF	IB0000 ~ IB0FFF	Input Relay Device
IW	IW0000.0 ~ IW7FFF.F	IW0000 ~ IW7FFF	Input Register Device

Note

(1) Suggestions

► For device usage and details, refer to XP-Builder manual.
► Use it within device area.
► For calculating device area, refer to YASKAWA manual.
►The range of device may be different depending on CPU module. For more details, refer to KDT PLC manual.

Chap.21 KDT PLC

21.1 PLC List

XGT Panel can be connected to KDT PLC as below.

PLC	CPU Module	Connection Mode	Communication mode	Connection Module	Remarks
XP	XP1 XP2 XP3	Link Mode	RS-232C	CM1-SC02A CM1-SC01A	Communication Module
		Link Mode	RS-422/485	CM1-SC02A CM1-SC01B	Communication Module
CP	CP3 CP4	Link Mode	RS-232C	CM1-SC02A CM1-SC01A	Communication Module
		Link Mode	RS-422/485	CM1-SC02A CM1-SC01B	Communication Module
		Internal Communication	RS-232C	CP4C	Embedded CPU
			RS-422/485	CP4D	Embedded CPU

Notice

(1) Not available PLC
- ► CPU Loader and Ethernet communication are not available.
- ► For more details on communication, refer to KDT PLC manual.

(2) Term Description
- ► Link: indicates communication to PLC communication muddle.
- ► Internal communication : Indicates communication muddle embedded to CPU.

21.2 Wiring Diagram

21.2.1 Link Mode

The communication modules of KDT PLC are divided into for RS-232C and RS-422/485.
The wiring for RS-232C is as below.

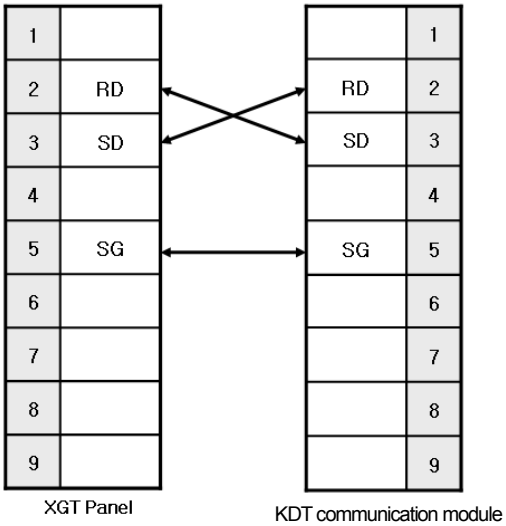

The wiring for RS-422 is as below.

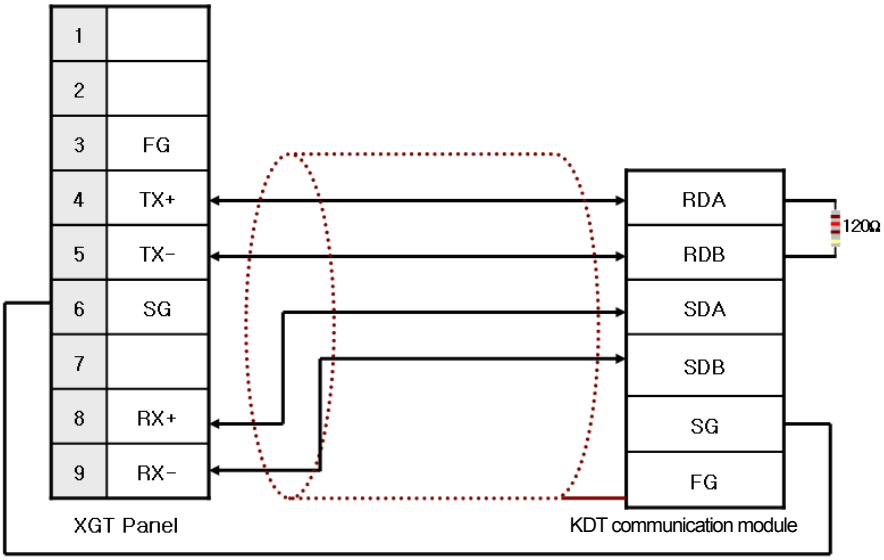

The wiring for RS-485 is as below.

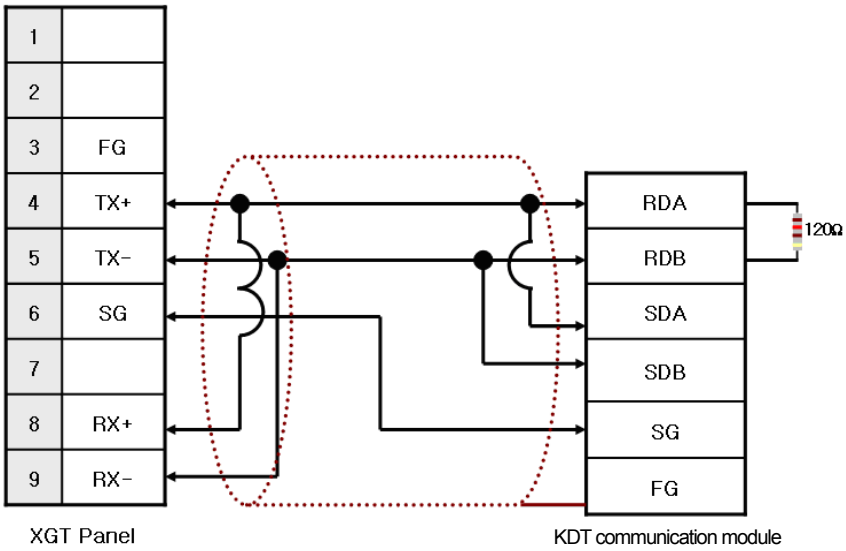

Notice

(1) Suggestions

- ► Set the terminator switch of XGT Panel.
- ► A shielded wire is recommended for stable communication. For detailed wiring, refer to KDT PLC manual.
- ► For CP4's internal communication port wiring, refer to KDT PLC manual

21.3 Communication Setting

21.3.1 Link Mode

The PLC communication parameter adopts CICON of KDT. For more details, refer to KDT PLC manual. Setting method is as below.

(1) After executing CICON program, select Menu->Tool->Setting Special Card-> RS232C/422 Module.
(2) After executing CICON program, select 'Menu->Tool->Setting Special Card-> RS232C/422 Module.
(3) After setting communication type, set the communication for each channel.
  (a) Communication type: Null Modem(For RS-232C only)
  (b) Protocol: HMI Protocol
  (c) Select communication speed among 38,400/19,200/9,600[bps] that is available for XGT Panel.
  (d) Set the other communication parameters.

Notice

(1) Checking communication status

► There are RX, TX LED for KDT communication module. If you have a normal communication, you can see that LED flashes fast.

(2) Suggestions to set PLC

► This manual covers just simple description so for installation make sure to refer to KDT PLC manual.

► The setting method for internal communication is omitted from this manual. For more details, refer to the KDT PLC manual.

(3) Suggestions to set XP-Builder

► When creating a project or communication setting, you need to select the above.

► When RS-422/485 is realized as 1:N, it can transmit the data of XGT PLC faster than PLC's response process. Then, for quality of communication, you are required to set transmission waiting time. (Recommended 50~100ms)

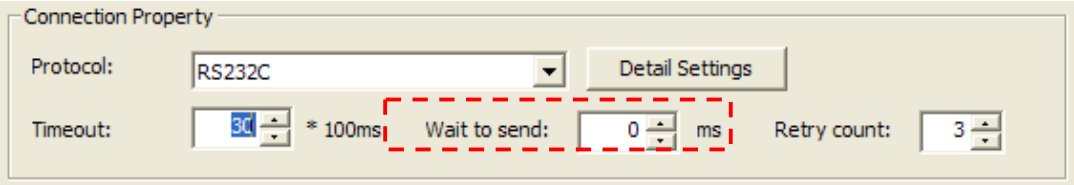

21.4 Available Devices

The available devises for XGT Panel are as below.

Area	Size	Bit Contacts	Word Data	Remarks
X	8,192contacts	X0000 ~ X511F	X0000 ~ X5110	-
Y	8,192contacts	Y0000 ~ Y511F	Y0000 ~ Y5110	-
M	16,000contacts	M0000 ~ M999F	M0000 ~ M9990	-
L	16,000contacts	L0000 ~ L999F	L0000 ~ L9990	-
K	16,000contacts	K0000 ~ K999F	K0000 ~ K9990	-
F	2,048contacts	F0000 ~ F127F	F0000 ~ F1270	-
T	4,096contacts	T0000 ~ T4095	T0000 ~ T4095	Divided into TC, TS Area
C	4,096contacts	C0000 ~ C4095	C0000 ~ C4095	Divided into CC, CS Area
S	-	S00.00 ~ S99.99	-	-
D	32,000words	-	D00000 ~ D31999	-
Z	2,048words	-	Z0000 ~ Z2047	-

Notice

(1) Suggestions
- ► For device usage and details, refer to XP-Builder manual.
- ► Use it within device area.
- ► For calculating device area, refer to KDT PLC manual.
- ► Among F areas, system flag area is set as Writing under XP-Builder but writing operation is not available under PLC.
- ► The range of device may be different depending on CPU module. For more details, refer to KDT PLC manual.

Chap.22 MITSUBISHI: MELSEC-FX PLC

MELSEC-FX Series PLC Driver of Mitsubishi is available since V1.05 so if you use the previous version, please apply XP-Builder and XGT Panel software that are beyond V1.05 from our web-site.

22.1 PLC List

XGT Panel can be connected to MELSEC-FX PLC as below and especially, it supports the communication with the module that adopts calculator link.

PLC Type	CPU Module	Connection Mode	Communication Mode	Connection Module
MELSEC-FX	FX_{1N} FX_{2N} FX_{1NC} FX_{2NC} FX_{0N} FX_{1S} FX_2 FX_{2C}	Link Mode	RS-232C	FX_{1N}-232-BD FX_{2N}-232-BD FX_{0N}-232ADP FX_{2NC}-232ADP FX_{0N}-232ADP + FX_{1N}-CNV-BD FX_{0N}-232ADP + FX_{2N}-CNV-BD FX_{2NC}-232ADP + FX_{1N}-CNV-BD FX_{2NC}-232ADP + FX_{2N}-CNV-BD FX-232ADP
		Link Mode	RS-422/485	FX_{1N}-485-BD FX_{2N}-485-BD FX_{2NC}-485ADP FX_{0N}-485ADP FX-485ADP

The PLC version that supports calculator link is as below.

CPU Module	FX_{2N}, FX_{2NC}	FX_{0N}	FX_{1N}, FX_{1NC}, FX_{1S}	FX_2, FX_{2C}
Version	More than V1.06	More than V1.20	From initial type	More than V3.30

Notice

(1) Not available PLC
- ► CPU module direct connection(Loader) is not available.
- ► The PLC version that does not support calculator link is not available.

(2) Term Description
- ► Link: Indicate the communication with PLC communication module.

(3) Suggestions
- ► For more details, refer to MELSEC-FX manual and be noted that the particulars can be changed by MITSUBISHI with being irrelevant of this item.

22.2 Wiring Diagram

22.2.1 Link Mode

The communication type is divided into for RS-232C and RS-422/485.

The calculator link of Mitsubishi MELSEC-FX that adopts RS-232C has two connector types. The below is the wiring for 9 pins connector.

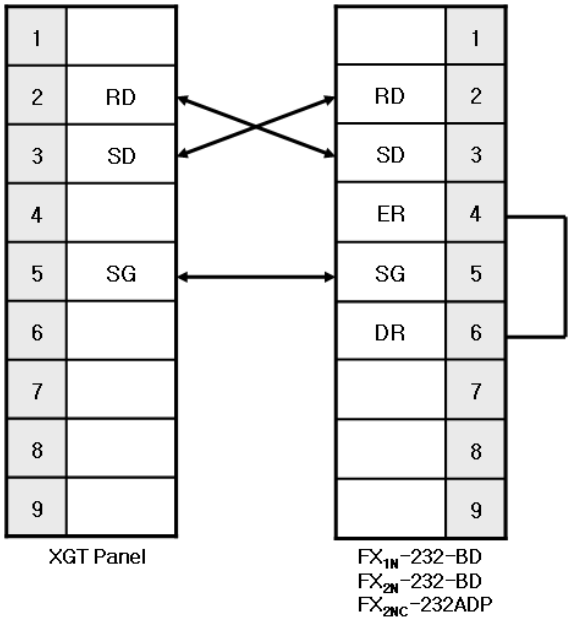

The below is the wiring for 20 pins connector.

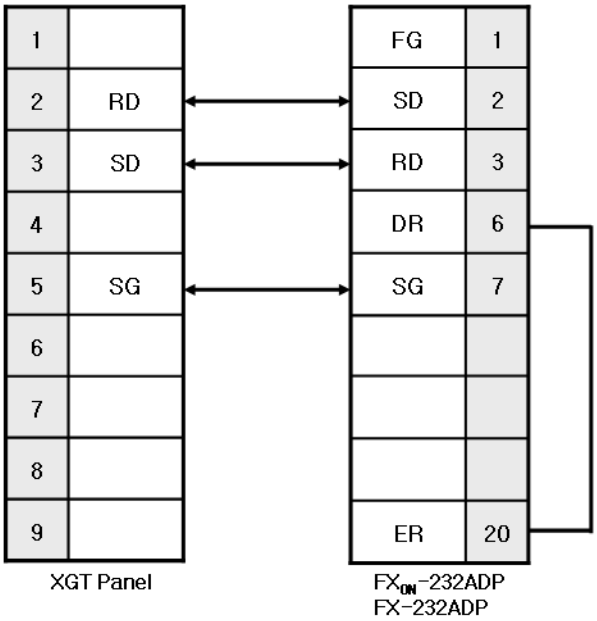

Notice

(1) Suggestions

► MELSEC-FX adopts flow control so if the above wiring is not fulfilled, communication does not work properly.

► **A shielded wire proposed by Mitsubishi is recommended for stable communication.** For shield wiring, refer to the MELSEC-FX manual.

The below is the wiring for RS-422/485.
Mitsubishi recommends 1-line pair wiring so in this case, RS-485 wiring is more proper than RS-422.

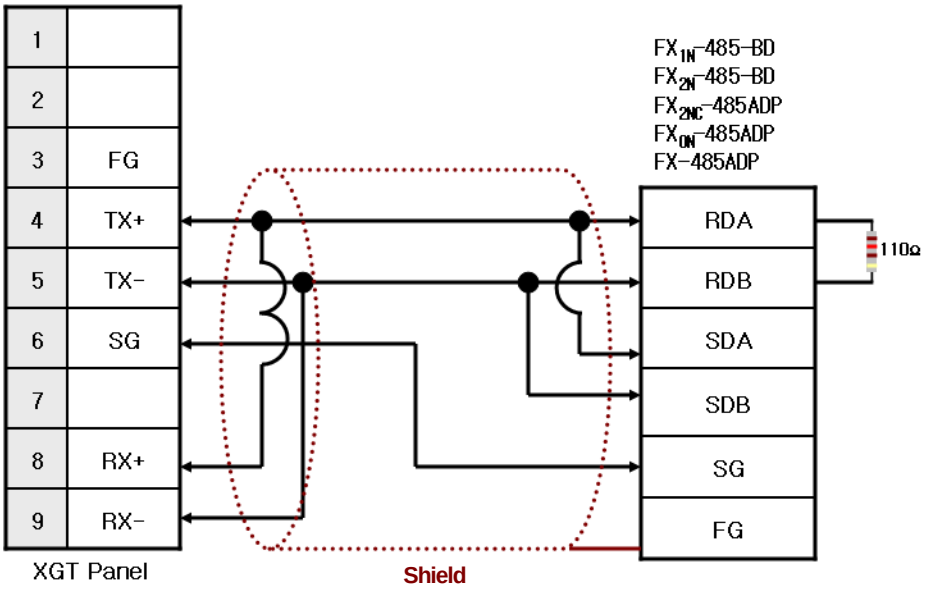

Notice

(1) Suggestions

► The array of connector and pin may be different depending on the PLC type.

► Check the end switch of XGT Panel. It is basically set as terminator type.

► RS-485 is recommended rather than RS-422.

► **A shielded wire is recommended for stable communication.** For shield wiring, refer to the MELSEC-FX manual.

22.3 Communication Setting

22.3.1 Link Mode

You can se the communication parameter of MELSEC-FX PLC at GX Developer S/W. For more details, refer to MITSUBISHI communication manual.

(1) After executing GX Developer, select Parameter -> PLC Parameter -> PLC System(2) at a project screen.

(2) Activate Communication Operation Setting.

(3) Select the private protocol to set calculator link.

(4) Select the basic communication parameters (transmission speed/data length/parity/ stop bit). Be noted that XGT Panel provides 19,200[bps] and 9,600[bps] only.

(5) Select the communication type.

(6) XTG Panel adopts type 4 and sum check among calculator link so make sure to check it. If you have wrong setting details, the proper communication with XGT panel can not be expected.

(7) Select the unit No.

Notice

(1) Suggestions to set PLC

► For setting, make sure to refer to MITSUBISHI manual.

(2) Suggestions to set XP-Builder

► When creating a project or communication setting, you can set the below.

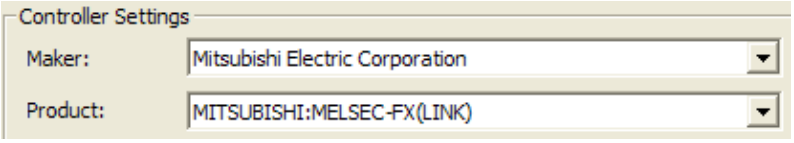

► When using RS-422/485 as 1:N, set transmission waiting time flexibly depending on communication structure(Recommended : 50~100ms)

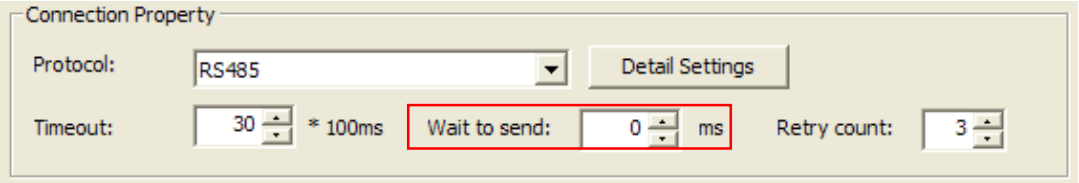

► When setting detailed connection options, you need to establish CPU type and set No Designation for all PLCs except FX_{1S} and FX_{1N}.

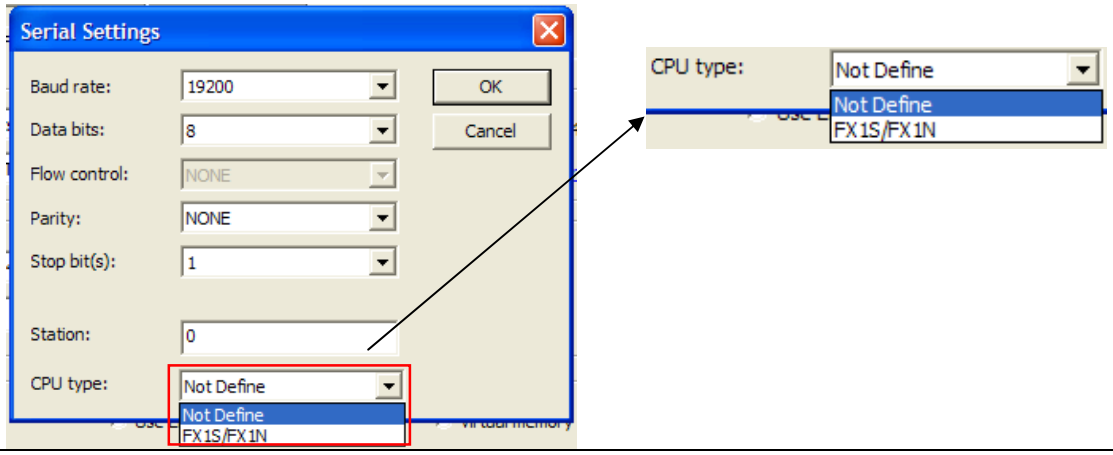

22.4 Available Devices

The available devices for XGT Panel are as below.

Area	Size	Bit Contacts	Word Data	Remarks
X	256contacts	X000 ~ X377	X000 ~ X360	Octal Number
Y	256contacts	Y000 ~ Y377	Y000 ~ Y360	Octal Number
M	7680contacts	M0000 ~ M7679	M0000 ~ M7664	Decimal Number
	512contacts	M8000 ~ M8511	M9000 ~ M8496	Decimal Number
S	4096contacts	S0000 ~ S4095	S0000 ~ S4080	Decimal Number
TS	512contacts	TS000 ~ TS511	-	Decimal Number
CS	256contacts	CS000 ~ CS255	-	Decimal Number
TN	-	-	TN000 ~ TN511	Decimal Number
CN	-	-	CN000 ~ CN199	Decimal Number
	-	-	CN200 ~ CN255	
D	-	-	D0000 ~ D7999	Decimal Number
	-	-	D8000 ~ D8511	
R	-	-	R00000 ~ R32767	Decimal Number

Notice

(1) Suggestions

► For the details on device with usage, refer to XP-Builder manual.

► Use it within device area. In case that the data of unavailable area is requested, MELSEC-FX sends error code and it will be displayed at the upper place of XGT Panel. For details on error code, refer to MELSEC-FX manual.

► The range of device may be different depending on CPU module so refer to each CPU module manual.

► When using SN(Accumulative Timer) device, you need to change PLC's parameter.

► The whole monitoring is not available for step relay(S Device).

Chap.23 Parker: Hi-Driver

Inverter Hi-Driver of Parker Hannifin Corporation is available since V1.20 so if you use the previous version, please apply XP-Builder and XGT Panel software that are beyond V1.20 from our web-site.
This manual does not cover all kinds of Parker Hannifin Corporation's inverters because of limited space so the description on how to set wiring and communication for main kinds of devices will be provided hereupon.

23.1 Inverter List

XGT Panel can be connected to the below inverters.

Kinds of Devices	Communication type	Protocol	Remarks
LVD-1	RS-485/RS-422	Parker Hi-Driver Protocol	Embedded Communication type
LVD-2			
LVD-5			
LVD-10			
LVD-15			

Notice

(1) The maximum number of connected devices is 31EA.
(2)The total length of communication line is extended to 1,200[m], however, for stable communication, it should be within 500[m].

23.2 Wiring Diagram

23.2.1 RS-485 Communication Mode

The wiring for 1:1 RS-485 is as below.

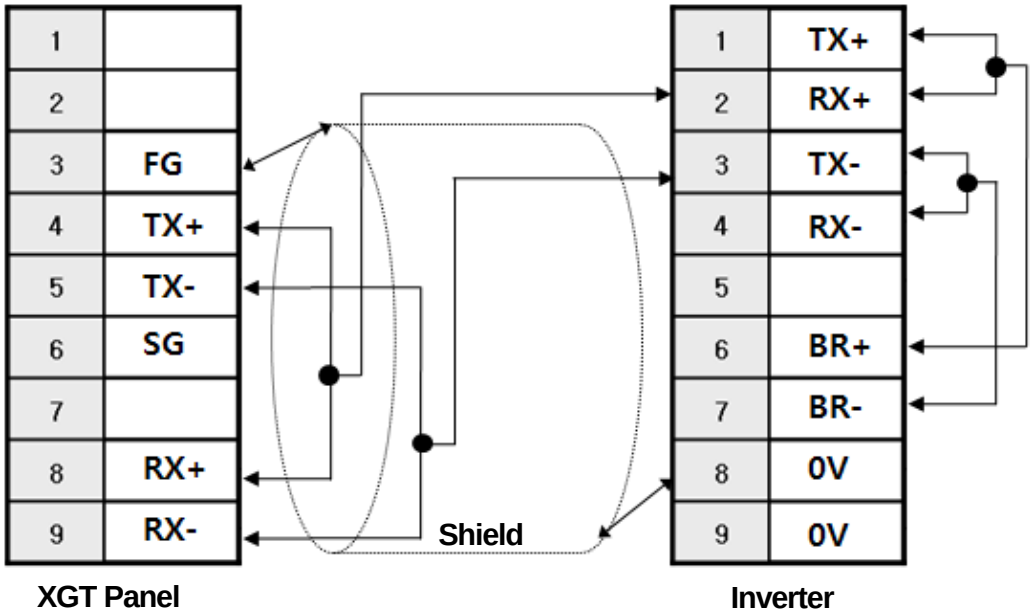

The wiring for 1:N RS-485 communication is as below.

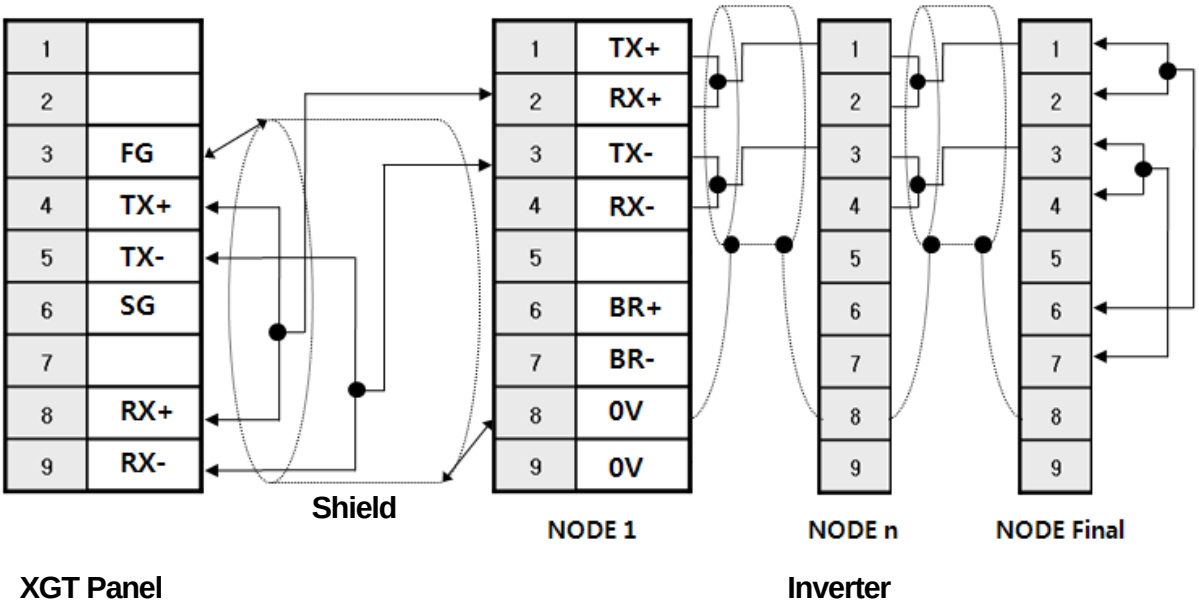

23.2.2 RS-422 Communication Mode

The wiring for 1:1 RS-422 communication is as below.

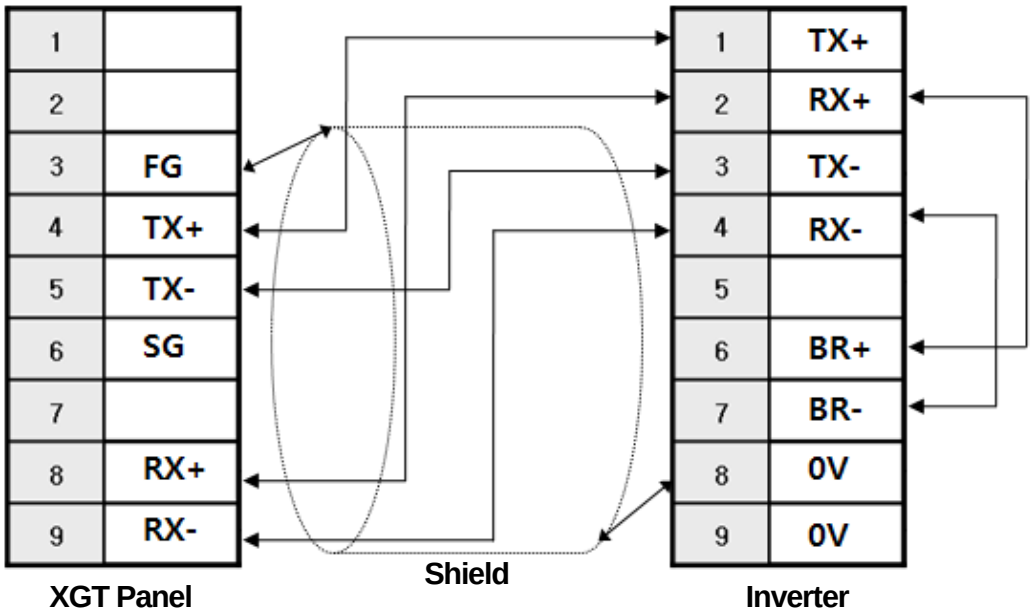

The wiring for 1:N RS-422 communication is as below.

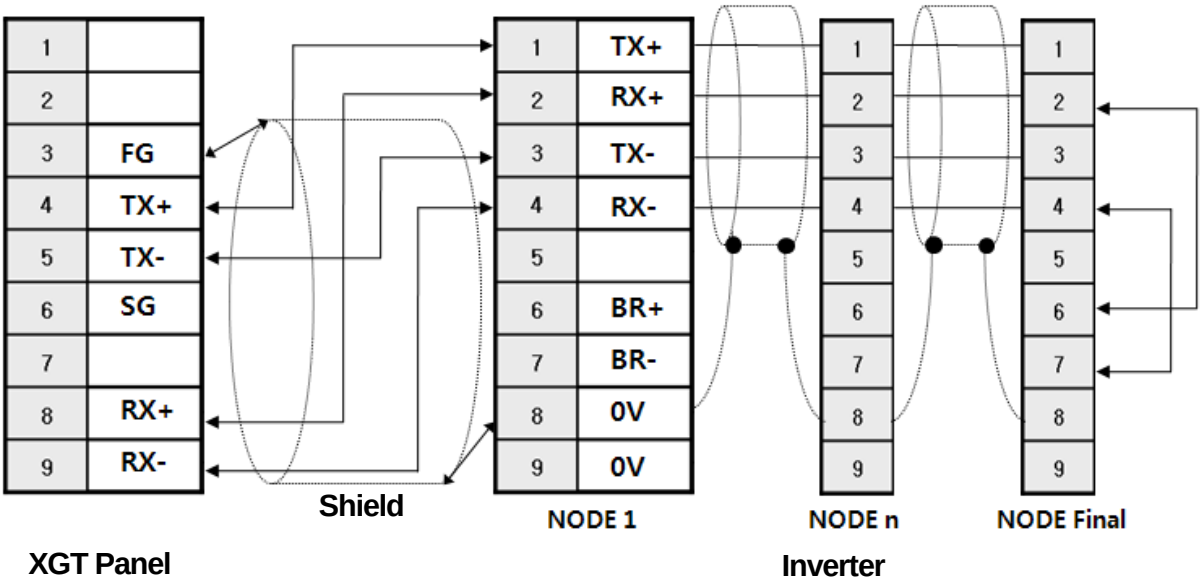

Notice

(1) Suggestions

► Check the end switch of XGT Panel. It is basically set as terminator type.

► **A shielded wire is recommended for stable communication.** For shield wiring, refer to the Chap.2.

►If external noise generated from inverter or the motor connected to inverter flows into the cable, communication may be interrupted intermittently. In this case, connect one side to FG or remove FG to normalize communication.

► When connecting several inverters to the same line, the last one should be terminated such as 1:N composition as shown at the picture 12.2.1 or 12.2.2.

23.3 Communication Setting

You can set the communication parameter of an inverter with a keypad switch. The setting method is different depending on the kinds of devices so for more details, refer to the inverter communication manual.

The description on setting RS-485 for communication embedded type(LVD 15) will be provided hereupon.

The outline of Hi-Driver Inverter (LVD 15 Module) is as below.

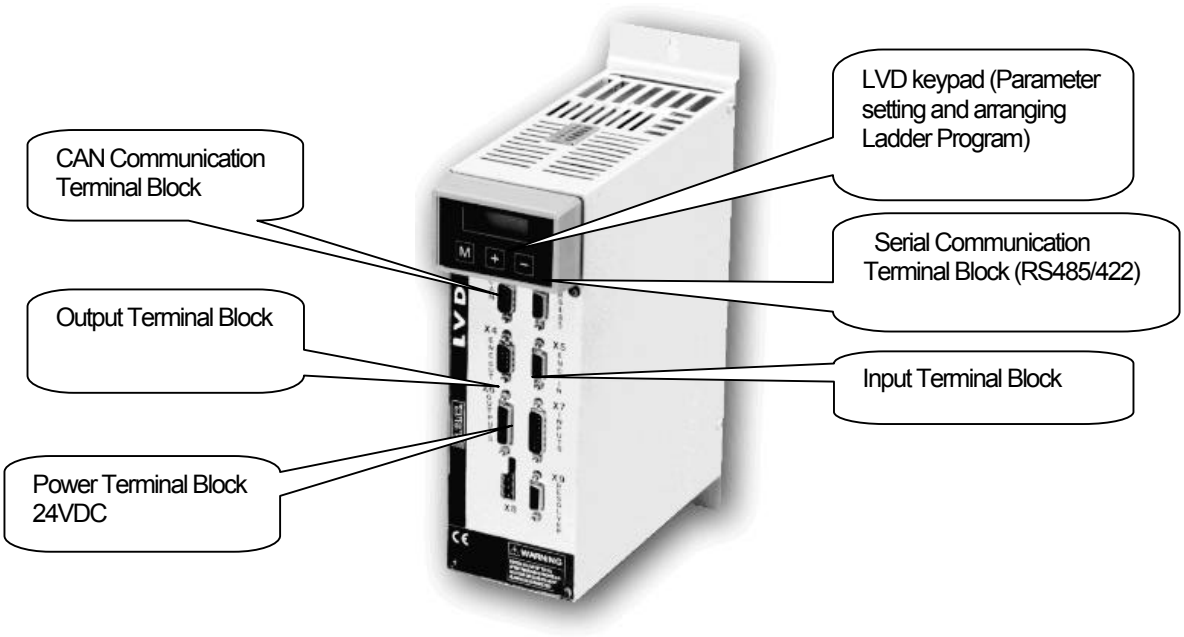

To set the communication parameters for inverter, select each function code with LVD keypad and select communication setting description for your own working environment.
To realize Serial Communication for Hi-Driver inverter, you need to activate communication speed(Pr26), Serial Address(Pr27), Serial Communication Enable(b40.14), initializing Serial Communication (b42.3), Saving Configuration Settings. The setting details are as below.

(a) Set communication speed.

Code	Contents	Setting range	Description	
Pr26	Setting communication speed	0~10	Communication speed b/s (time-out)	
			0	600 (512ms)
			1	1200 (256ms)
			2	2400 (128ms)
			3	4800 (64ms)
			4	9600(*) (32ms)
			5	9600 (32ms)
			6	19200 (16ms)
			7	38400 (12ms)
			8	57600 (8ms)
			9	125000 (4ms)
			10	57600 (**) (8ms)

(*) : Pr26 = 4 is different from Pr26 = 5. Pr26 = 4 that includes Response Delay of 25ms is used for the PLC which requires such characteristics. (**) : It is used for the communication between two HVD Drivers.

※ In the case of Hi-Driver, [1 Start Bit], [8 Data Bits], [Even Parity Bit], [1 Stop Bit] are fixed.

(b) Set the unit No. of an inverter.

Code	Contents	Setting range	Description
Pr27	Inverter unit No.	0~31	For 1:N connection, avoid the same unit No. as other inverters' No.

(c) Setting Serial Communication Enable

Code	Contents	Setting range	Description	
b40.14	Setting Serial Communication Enable / Disable	0~1	It sets Enable / Disable for Serial Communication.	
			0	Disable
			1	Enable

Set it as b40.14 = 1.

(d) Initialize Serial Communication.

Code	Contents	Setting range	Description
b42.3	Initializing the serial port based on setting descriptions.	0~1	Initializing Serial Communication Port
			Initializing the port by applying 1

(e) Save the established Configuration.

Code	Contents	Setting range	Description
b99.15	Saving the setting details on Serial Communication to LVD memory	0~1	Saving the contents of Configuration
			Saving the details by applying 1

Notice

(1) Suggestions

- ► When connecting several Inverters, avoid overlap of the unit No.
- ► If you need to apply 9600 one-way to an inverter, select Pr26 = 5. Pr27 is for special purpose only.
- ► In the case of Hi-Drive(LVD), [1 Start Bit], [8 Data Bits], [Even Parity Bit], [1 Stop Bit] are fixed.
- ► XGT Panel provides the transmission speed of 9,600, 19,200, 38,400, 57,600, 115,200 so 9,600 or less is not allowable.

You can set the communication parameter of XGT Panel through XP-Builder. (Refer to XP-Builder manual.) XP-Builder basically provides the below communication parameters.

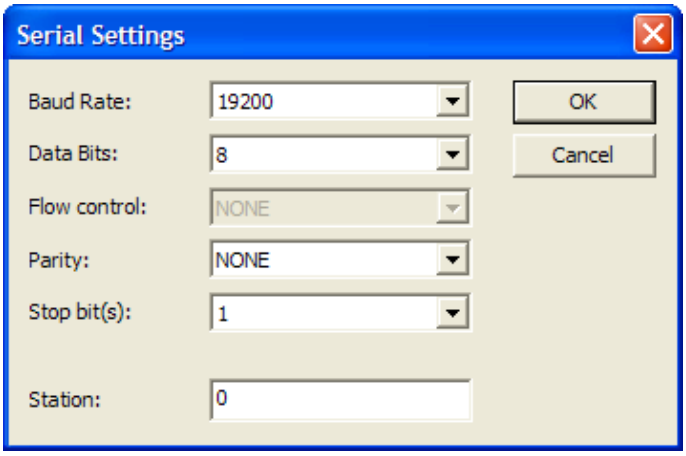

Notice

(1) Suggestions to set Inverter

► For setting, make sure to refer to the manual of Parker Hannifin Corporation LVD Series.

(2) Suggestions to set XP-Builder

► When creating a project or communication setting, you need to set the below.

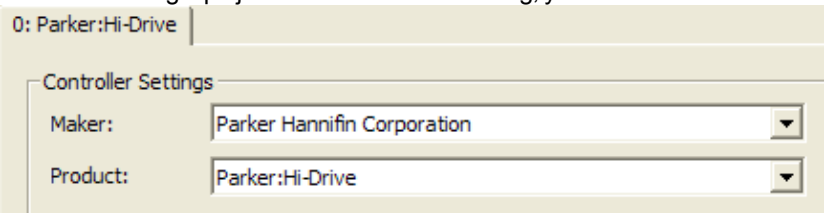

► When RS-485 is realized as 1:N, set transmission waiting time flexibly depending on communication structure. (Recommended : 50~100ms)

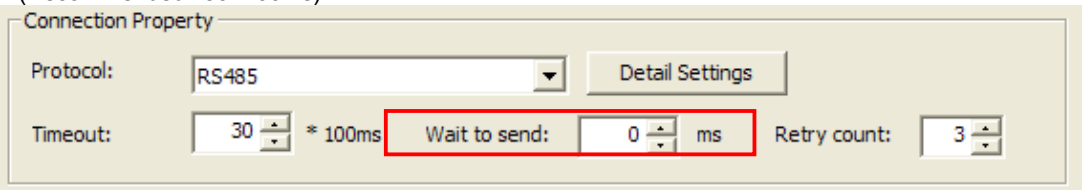

23.4 Available Device

The available devices for XGT Panel are as below.

23.4.1 Basic Parameters

- **Decimal Parameter**

Parameter	Address	Length	Description	Reading /Writing	Scale	Range
Pr0	038h	2	Motor speed in rpm	Read only	1	
Pr1	034h	2	analog reference		1	-10000 ~ 10000
Pr2	03Ah	2	full scale 1		1	-10000 ~ 10000
Pr3	03Ch	2	full scale 2		1	-10000 ~ 10000
Pr4	036h	2	frequency full scale		1	-32767 ~ 32767
Pr5	03Eh	2	Internal reference		1	-9000 ~ 9000
Pr6	040h	2	Reserved reference	Read only	1	-9000 ~ 9000
Pr7	042h	2	Chosen reference	Read only	1	-9000 ~ 9000
Pr8	0Aeh	2	Positive acceleration in seconds		0.001	0.002 ~ 65.535
Pr9	0B0h	2	Positive deceleration in seconds		0.001	0.002 ~ 65.535
Pr10	0B2h	2	Negative acceleration in seconds		0.001	0.002 ~ 65.535
Pr11	0B4h	2	Negative deceleration in seconds		0.001	0.002 ~ 65.535
Pr12	0B6h	2	Limit switch deceleration		0.001	0.002 ~ 65.535
Pr13	0B8h	2	Overspeed threshold		1	0 ~ 13000
Pr14	044h	2	Upper speed limit		1	-13000 ~ 13000
Pr15	046h	2	Lower speed limit		1	-13000 ~ 13000
Pr16	048h	2	Integral gain		1	0 ~ 32767
Pr17	0Bah	2	Dampimg factor		1	0 ~ 32767
Pr18	0BCh	2	Filter time constant		1	0 ~ 1000
Pr19	0Beh	2	User current limit		0.1	0 ~ 100.0
Pr20	04Ah	2	Bus voltage	Read only	1	
Pr21	04Ch	2	Reserved torque limit	Read only	1	
Pr22	04Eh	2	Auxiliary reference	Read only	1	
Pr23	051h	1	Current alarm code	Read only	1	
Pr24	052h	1	Last alarm code	Read only	1	
Pr25	053h	1	Software release code	Read only	1	
Pr26	05Eh	1	Baud rate		1	Refer to 12.3 communication setting
Pr27	05Fh	1	Serial address		1	Refer to 12.3 communication setting
Pr28	0C0h	2	Shaft position(0..4095)	Read only	1	0 ~ 4095

Parameter	Address	Length	Description	Reading /Writing	Scale	Range
Pr29	061h		Number of poles		1	2 ~ 64
Pr30	0C2h	2	Offset		1	-32767 ~ 32768
Pr31	054h	1	Operating mode		1	0 ~ 15
Pr32	0C4h	2	Motor rated speed		1	0 ~ 9000
Pr33	0C6h	2	Rated current		0.1	10.0 ~ 50.0
Pr35	0C8h	2	Filter torque demand	Read only	0.1	
Pr36	058h	2	I^2t accumulation	Read only	0.1	
Pr37	05Ah	2	Braking thermal image	Read only	0.1	
Pr38	0Cah	2	Auxiliary analog output		0.1	-100.0 ~ 100.0
Pb40	05Ch	2	Flags used by main block			
Pb41	056h	2	Flags used by main block			
Pb42	060h	1	Flags used by main block			
Pr43	0E8h	2	Stack pointer		1	-32767 ~ 32768
Pr44	0E4h	2	Table element		1	-32767 ~ 32768
Pr45	0Eah	2	Analog input	Read only	1	-16347 ~ 16347
Pr46	0Ech	2	Encoder in LSB	Read only	1	
Pr47	0Eeh	2	Encoder in MSB	Read only	1	
Pr48	0F0h	2	LSB dimension capture	Read only	1	
Pr49	0F2h	2	MSB dimension capture	Read only	1	
Pr50	064h	2				
Pr51	066h	2				
Pr52	068h	2				
Pr53	06Ah	2				
Pr54	06Ch	2				
Pr55	06Eh	2				
Pr56	070h	2				
Pr57	072h	2				
Pr58	074h	2				
Pr59	076h	2				
Pr60	078h	2				
Pr61	07Ah	2				
Pr62	07Ch	2				
Pr63	07Eh	2				
Pr64	080h	2				
Pr65	082h	2				
Pr66	084h	2				
Pr67	086h	2				
Pr68	088h	2				
Pr69	08Ah	2				
Pb70	062h	2	Flags used by operation mode			
Pr80	0Ceh	2				
Pr81	0D0h	2				
Pr82	0D2h	2				
Pr83	0D4h	2				
Pr84	0D6h	2				
Pr85	0D8h	2				

Parameter	Address	Length	Description	Reading /Writing	Scale	Range
Pr86	0Dah	2				
Pr87	0DCh	2				
Pr88	0Deh	2				
Pr89	0E0h	2				
Pb90	0E2h	2	Inputs			
Pb91	08Ch	2	Outputs			
Pr92	08Eh	2	Timer number 1			
Pr93	090h	2	Timer number 2			
Pb94	032h	2	Flags used by PLC and commands			
Pr95	0F4h	2	Quote compare 1 LSB			
Pr96	0F6h	2	Quote compare 1 MSB			
Pr97	0F8h	2	Quote compare 2 LSB			
Pr98	0FAh	2	Quote compare 2 MSB			
- Pb99	092h	2	Flags used by PLC and commands			

Binary Parameter

Parameter	Description	Remarks
b40.0	Selection of 1st or 2nd speed reference full scale value	For more details, refer to Parker Hannifin LVD Series Manual.
b40.1	Activation of algorithm for vibration suppression at 0 rpm	
b40.2	User/reserved reference selection	
b40.3	Reference hold	
b40.4	Left-hand stroke end	
b40.5	Right-hand stroke end	
b40.6	Stop function	
b40.7	Absolute/relative speed window selection	
b40.8	Analog torque limit	
b40.9	Software enable	
b40.11	Auxiliary analog output selector	
b40.12	Digital/analog reference selection	
b40.13	Internal reference Pr5 or frequency reference Pr4 selector	
b40.14	Serial communication enable	
b40.15	Reserved. Must always be set to 0.	
b41.0	Overspeed.	
b41.1	At speed	
b41.2	Zero speed	
b41.3	Forward.	
b41.4	Drive healthy	
b41.5	Hardware enable status	
b41.7	External alarm	
b41.8	Auxiliary alarm	
b41.10	Speed control saturation	
b41.11	I^2T active	
b41.12	Drive enabled	
b41.13	Keypad communication	
b41.14	Busoff error	
b41.15	Can bus watchdog	

Parameter	Description	Remarks
b42.0	Selector to configure encoder simulation. Default=0.	For more details, refer to Parker Hannifin LVD Series Manual.
b42.1	Selector to configure encoder simulation. Default=0.	
b42.2	Selector to configure encoder simulation. Default=0.	
b42.4	24V= overcurrent	
b42.5	Frequency input	
b42.6	Torque compensation	
b42.7	Reserved	
b94.3	Virtual axis validation	
b99.6	Extended menu enable.	
b99.7	Safety	
b99.8	UV autoreset	
b99.13	Pico-PLC status	

23.4.2 Basic Commands

- **Decimal Parameter**

Parameter	Description	Remarks
b42.3	Serial line re-initialisation	For more details, refer to Parker Hannifin LVD Series Manual.
b94.1	Main reference offset zero setting command	
b94.8	Quote compare	
b94.9	Quote compare	
b94.10	Quote compare	
b94.11	Quote compare	
b94.12	Homing function 1	
b94.13	Homing function 2	
b99.10	Alarm reset	
b99.11	Operating mode parameters default values	
b99.12	Default values	
b99.14	Store pico-PLC instructions	
b99.15	Store parameters	

Notice

(1) Suggestions

► For the details on device with usage, refer to Inverter Manual.

► Use it within device area.

► The range of device may be different depending on Inverter type so refer to each Inverter manual.

Chap.24 Siemens: S7 200 PPI Direct

S7 200 PPI Direct Driver of Siemens is available since V1.20 so if you use the previous version, please apply XP-Builder and XGT Panel software that are beyond V1.20 from our web-site.

24.1 PLC List

XGT Panel can be connected to the below Siemens PLC.

PLC Type	CPU Module	Connection Mode	Communication type	Connection Module	Remarks
S7 200	CPU212/ 214/222/224/226	CPU direct connection	RS-485	CPU Module	Embedded communication type

Notice

(1) The communication parameters of XGT Panel should coincide with the related PLC.
► In the case of Siemens S7 200 PLC, you can arrange communication setting and loader program with STEP 7-Micro/Win provided by Siemens.

(2) CPU 224XP has two communication ports. If you connect STEP 7-Micro/Win and PPI Adapter to unavailable port, communication between XGT Panel and PLC will be disconnected and in this case, to resume communication, you need to reset PLC. For Siemens S7 200 PLC, you can arrange communication setting and loader program with STEP 7-Micro/Win provided Siemens.

(3) Term Description
► CPU Module Direct Connection: Serial Communication executed by loader port of CPU module.

24.2 Wiring Diagram

24.2.1 RS-485 Communication

The wiring for 1:1 RS-485 communication mode is as below.

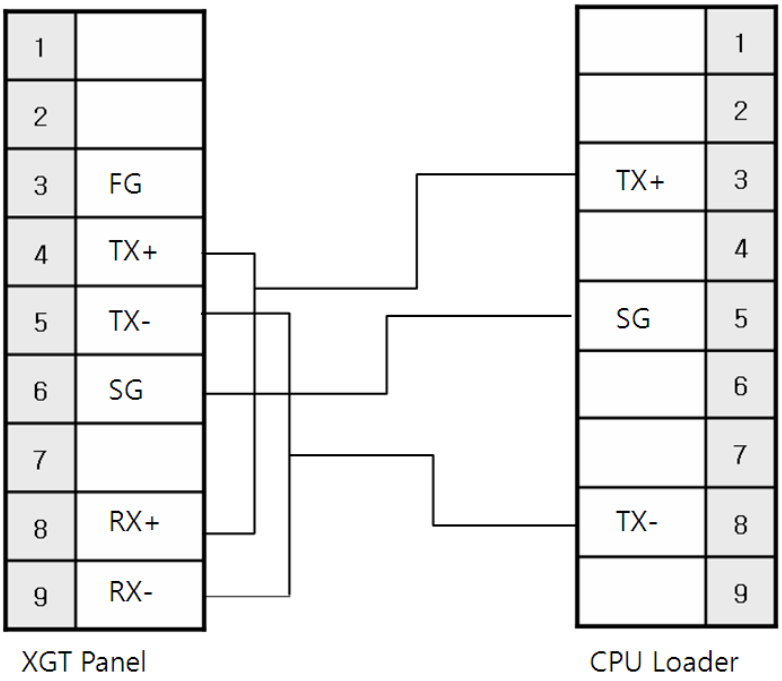

The communication parameter for PLC S7 200

Parameter	Composition
Communication speed	It can be selected among 9600, 19200, 187500 bps
Parity Bit	Even
Data Bit	8 Bits
Stop Bit	1 Bit
Communication mode	RS-485

Notice

(1) Suggestions

- ► S7 200 CPU Loader port has ±24V,±5V Pin for power supply. If you have wrong connection, loader port may be damaged or burned.
- ► **A shielded wire is recommended for stable communication.** For shield wiring, refer to the Chap.2.
- ► If you use two CPU loader ports at the same time, it may cause communication problem. In this case, reset the PLC.

24.3 Communication Setting

24.3.1 Setting S7 200 PPI Direct

You can set the communication parameters for S7 200 PPI Direct Driver of XGT Panel at XP-Builder. (Refer to XP-Builder manual.) The private program for STEP 7-Micro/Win should be applied to set communication for Siemens S7 200.

(1) Setting at XP-Builder

XP-Builder basically provides communication parameter for CPU module loader.

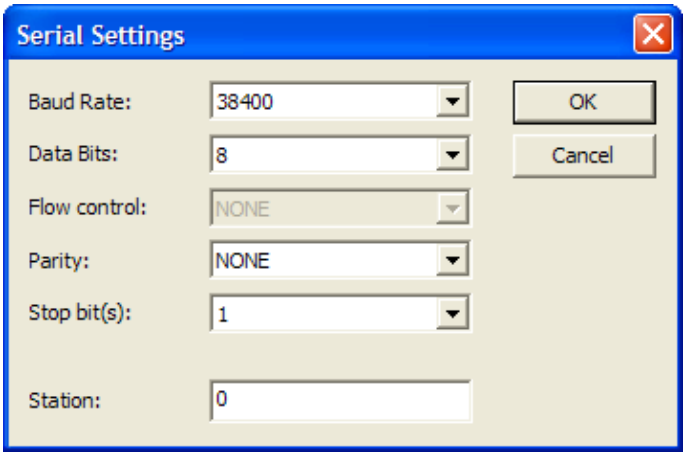

Notice

(1) Checking Communication Status

► If you can not check the communication status of Siemens S7 200 CPU module, check the state of XGT Panel through Diagnostics function and PLC information. (Refer to XGT Panel manual.)

(2) Suggestions to set XP-Builder

► When creating a project or communication setting, you need to set the below.

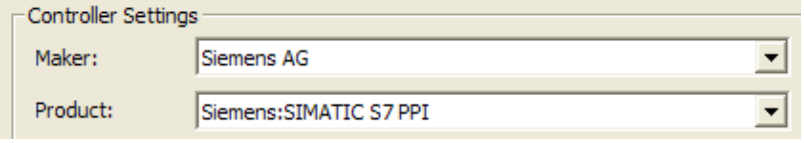

► When RS-485 is realized as 1:N, set transmission waiting time flexibly depending on communication structure. (Recommended : 50~100ms)

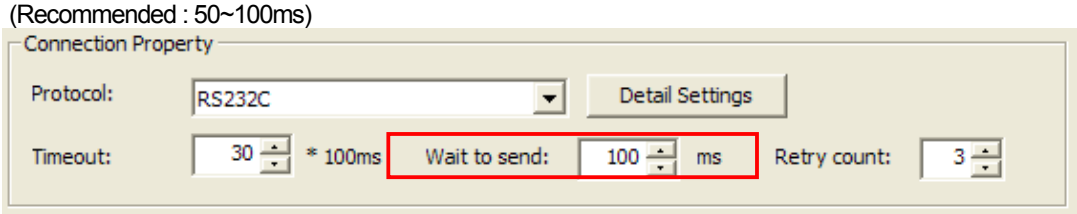

(2) Setting S7-200

You can set communication for S7-200 by executing STEP 7-Micro/Win. S7-200 PPI Adapter should be applied to set the communication of PLC.

If you execute STEP 7-Micro/Win as below and click Communication button, the initial screen will be displayed as below.

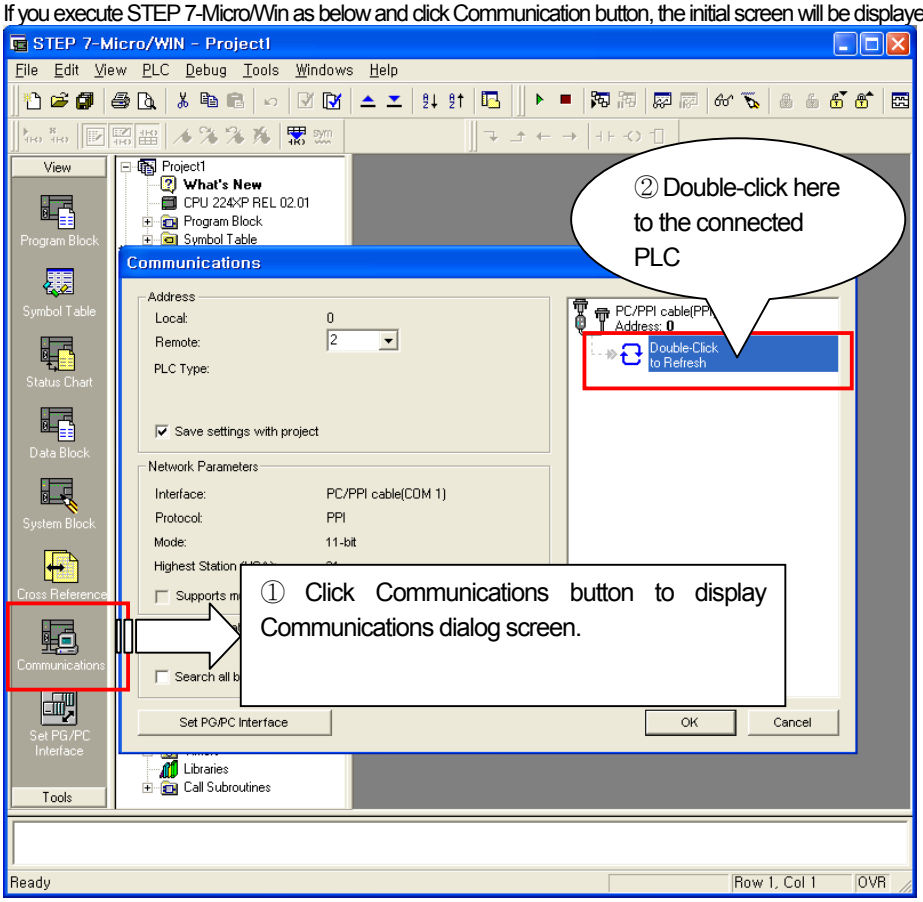

Through the above ①,② process, you can connect to the PLC. (If double-click the button to search for the connected PLC, you can get the below.

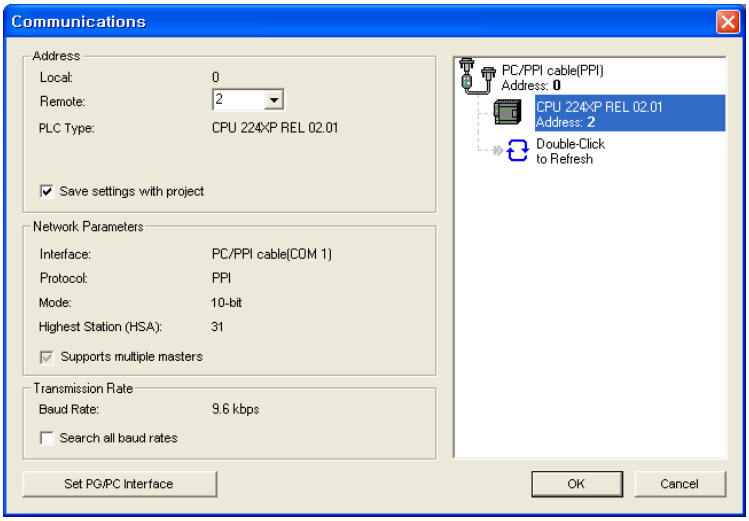

After connecting to the PLC as above, display the below communication setting screen and download the setting details to the PLC.

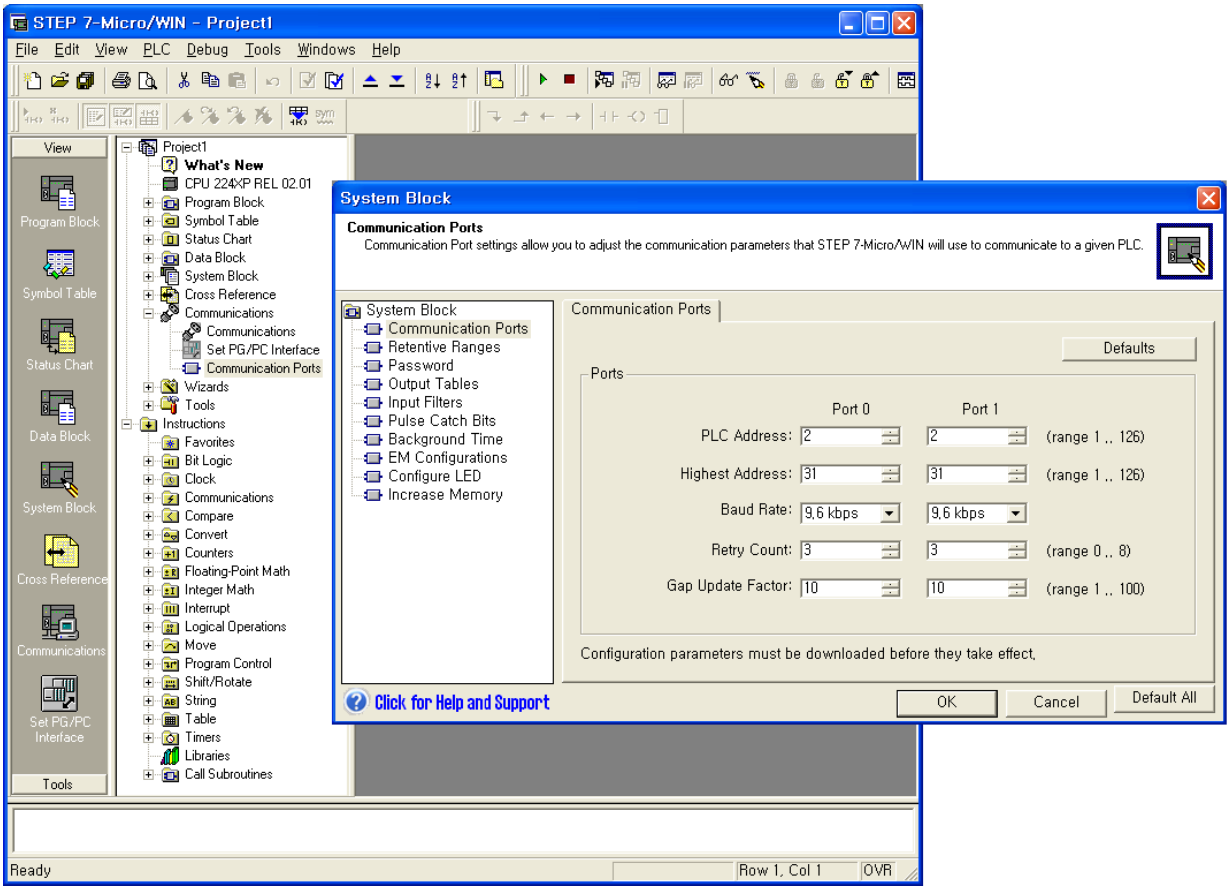

24.4 Available Device

The available devices for XGT Panel are as below.(S7-200 CPU 244XP is applied to the mentioned device)

Area	Description	Bit Contacts	Word Data	Double Word Data	Type	Area(Byte)
I	Input Relay	I0.0~I15.7	IW0~IW14	ID0~ID12	R	
Q	Output Relay	Q0.0~Q15.7	QW0~QW14	QD0~QD12	R/W	
T	Timer	T0~T255	TW0~TW255	-	R	
C	Counter	C0~C255	CW0~CW255	-	R	
V	Variable Memory	V0.0~V5119.7	VW0~VW5118	VD0~VD5116	R/W	
M	Internal Memory	M0.0~M31.7	MW0~MW30	MD0~MD28	R/W	
SM	Special Memory	SM0.0~SM299.7	SMW0~SMW298	SMD0~SMD296	R/W	

(1)Bit Contacts

► I,Q,V,M,SM Type : **[Area][Address].[Bit]**

[Area] : I,Q,V,M,SM

[Address] : Byte unit (Decimal) , Ex.)I,Q are the values among 0~15, V is the value among 0~5119.

[Bit] : The value between 0 and 7

► T,C Type : [Area][Address]

[Area] : T, C

[Address] : Word unit(Decimal) ,Ex.) T,C are the values among 0~255.

[Bit] : The value between 0 and 7

(2) Word Contacts / Double Word Contacts

► IW(ID),QW(QD),VW(VD),MW(MD),SMW(SMD) Type : **[Area][Address]**

[Area] : IW(ID),QW(QD),VW(VD),MW(MD),SMW(SMD)

[Address] : Byte unit (It should be a multiple of 2) Ex.) 0,2,4,6,8 …

※The value where 32Bit is applied with WORD area is the same as the value where 32Bit is applied with DWORD area. Furthermore, the value where 16Bit is applied with WORD area is the same as the value where 16Bit is applied with DWORD area. Namely, MW2 (16Bit) is the same as MD2(16bit).

Although W area is used as 16Bit and D area as 32Bit at PLC, they are applied equally due to the characteristics of XGT Panel.

► TW,CW Type : **[Area][Address]**

[Area] : TW, CW

[Address] : Word unit(Decimal) , 0~255

(3) Applying String

When applying string, make sure to set Using Data Byte Swap(S) at [Common|Basic] setting that is detailed setting option of string.

The offset of string should be set as an even number with byte and the size also should be set as an even number.

Ex.) Supposing that starting address is VW0 with the size of 14 Byte, offset is set as 2(even number) (since it is provided as word unit under XGT Panel)

Notice

(1) Suggestions

► For the details on device with usage, refer to Inverter Manual.

► The range of device may be different depending on CPU module so refer to each CPU module manual.

Chap. 25 Siemens: S7 300/400 MPI Driver

S7 300/400 MPI Driver of Siemens is available since V1.20 so if you use the previous version, please apply XP-Builder and XGT Panel software that are beyond V1.20 from our web-site.

25.1 PLC List

XGT Panel can be connected to the below Siemens PLC.

PLC Type	CPU Module	Connection Mode	Communication type	Connection Module	Remarks
S7 300/400	CPU312IFM CPU313 CPU314 CPU314IFM CPU315 CPU315-2DP CPU316 CPU316-2DP	Using PC Adapter(MPI Adapter)	RS-232	MPI Port of CPU Module	Embedded communication type

Notice

(1) The communication parameters of XGT Panel should coincide with the related PLC.
► In the case of Siemens S7 300/400 PLC, you can arrange communication setting and loader program with SIMATIC_S7_STEP7 provided by Siemens.

(2) Term Description
► CPU Module Direct Connection: Serial Communication executed by loader port of CPU module.

25.2 Wiring Diagram

25.2.1 RS-232 Communication (Using PC Adapter)

The wring for 1:1 RS-232 communication mode is as below.

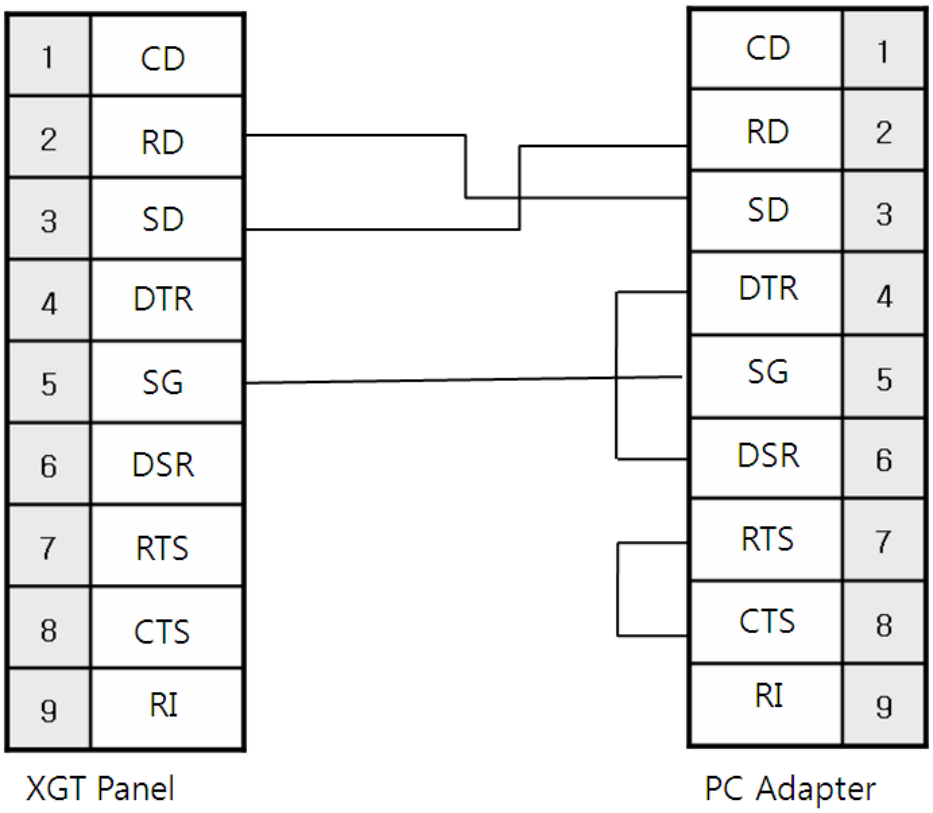

The communication parameters of PLC S7 300/400

Parameter	Composition
Communication seed	It can be selected among 19200, 38400
Parity Bit	ODD
Data Bit	8 Bits
Stop Bit	1 Bit
Communication mode	RS-232

Notice

(1) Suggestions

► **A shielded wire is recommended for stable communication.** For shield wiring, refer to the Chap.2.

► When communicating with S7 300/400 CPU Loader, set the unit No. of XGT Panel as 0 and select the unit No. of S7 300/400 PLC as 2 established initially.

► Only Using PC Adapter (MPI Adapter) is available for XGT Panel and Direct is scheduled to be available afterward.

► For RS-232 communication, make sure to connect it to PC Adapter 232 port. If it is directly connected to PLC MPI port, PLC may be damaged or burned.

Setting for PLC S7 300/400

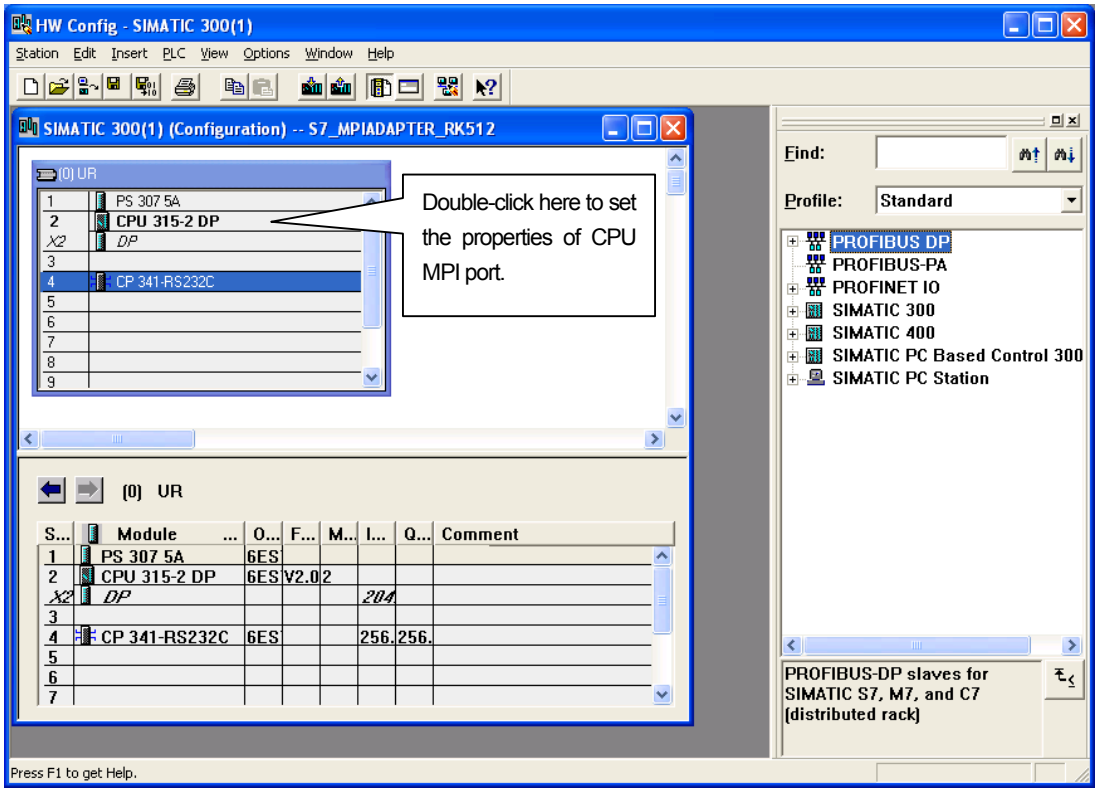

<Figure 1>

1) As shown at <Figure 1>, to set the properties for MPI port of CPU, double-click "CPU315-2 DP" of No.2 slot.

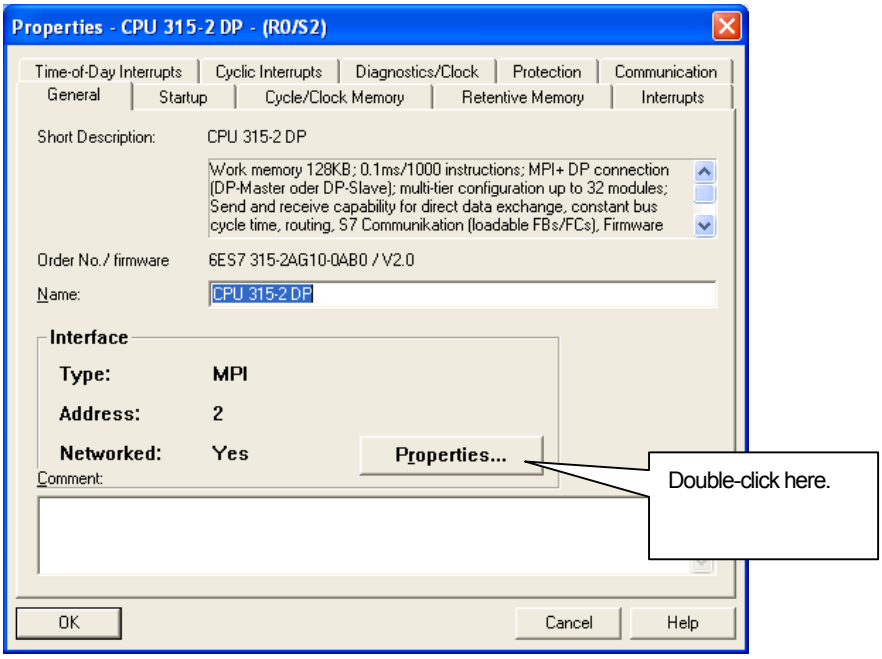

<Figure 2>

(2) Click “Properties” as shown at <Figure 2>.

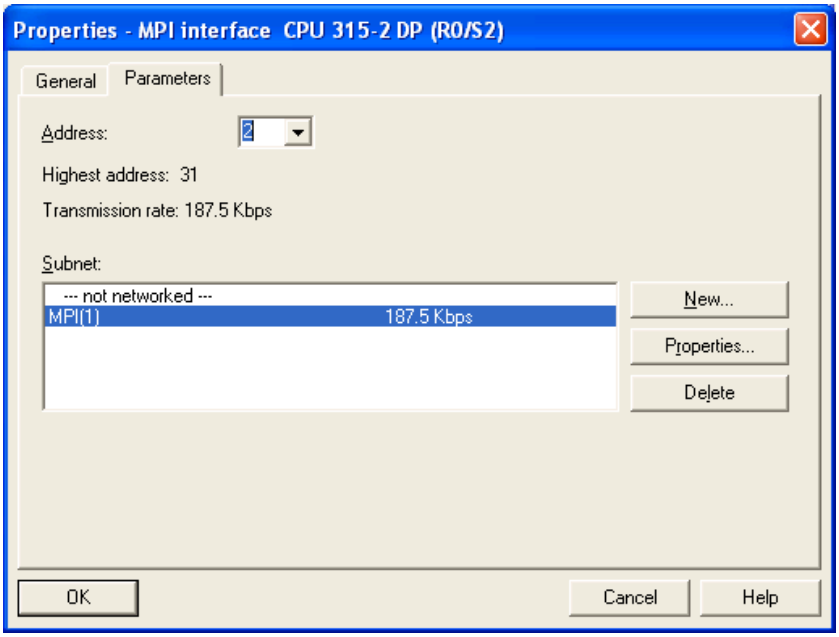

<Figure 3>

(3) Establish MPI Address (Set the default value as 2) and communication speed of MPI Port as shown at <Figure 3>.
Communication speed should be set as 187.5kbps.

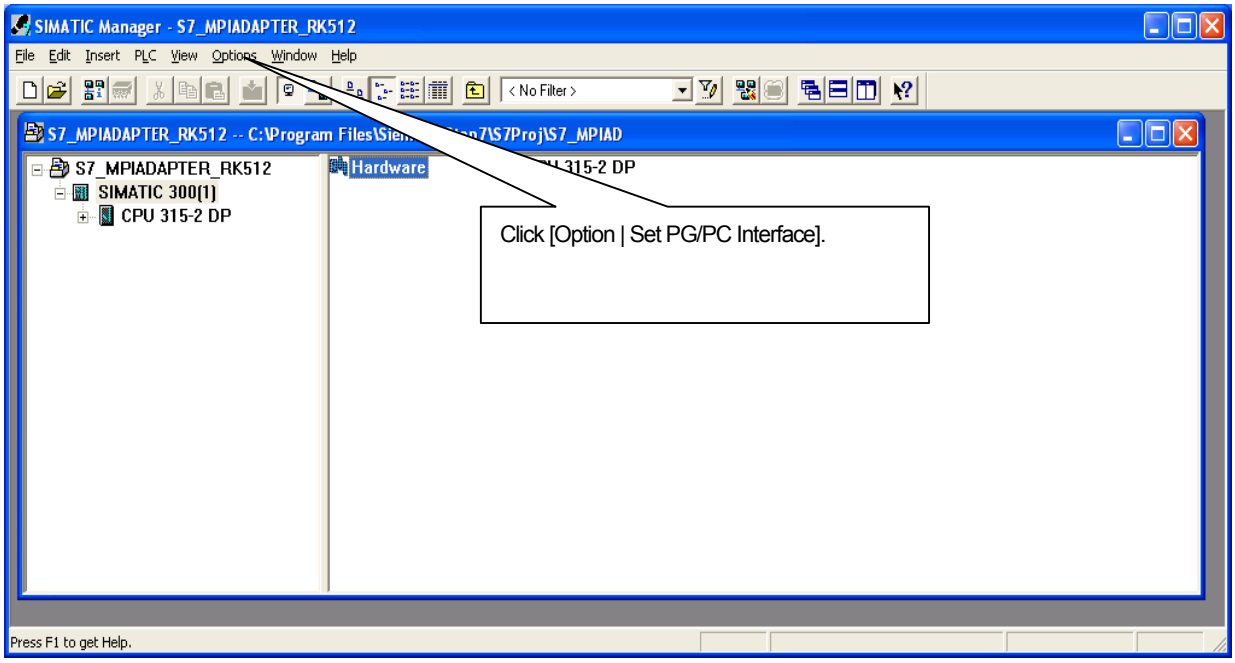

<Figure 4>

(4) Select [Option|Set PG/PC Interface] from upper menu as shown at <Figure 4>.

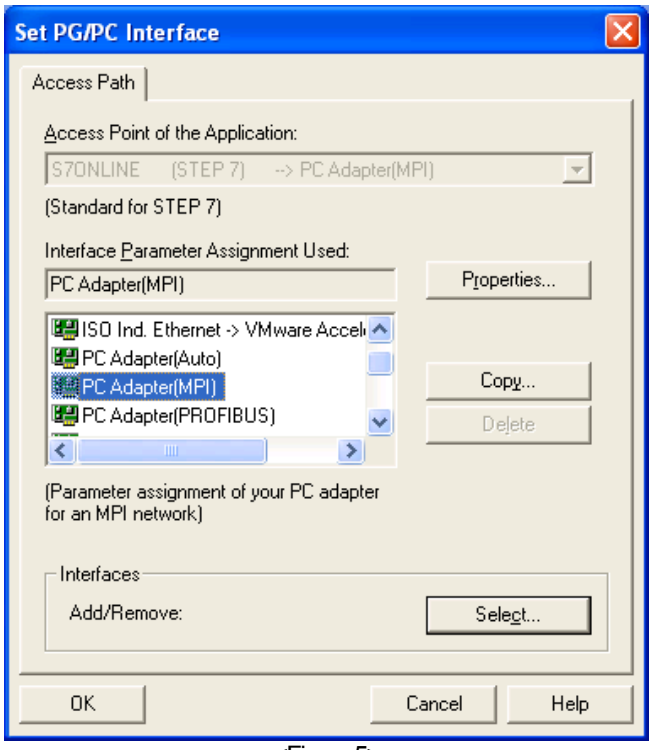

<Figure 5>

(5) Select PC Adapter(MPI) as shown at <Figure 5>.

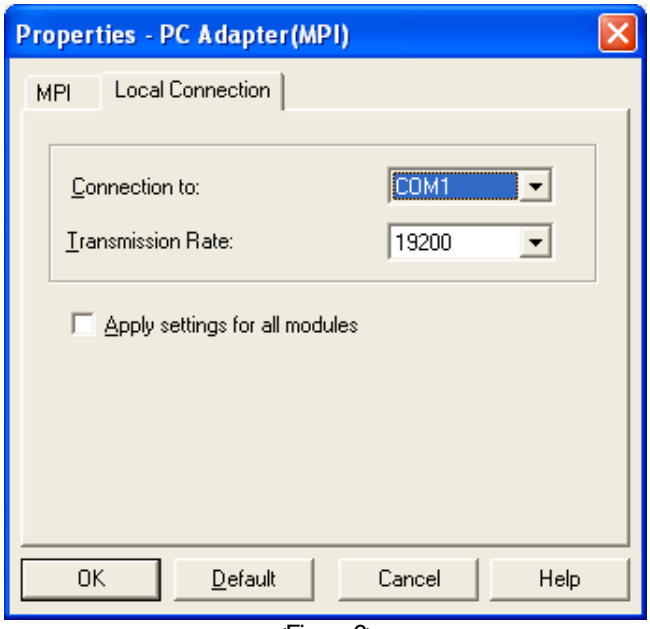

<Figure 6>

After selecting the port(communication port of PC that executes loader program) to be connected with Siemens PLC as shown at <Figure 6>, set the communication speed established by PC Adapter. (19200 or 38400)

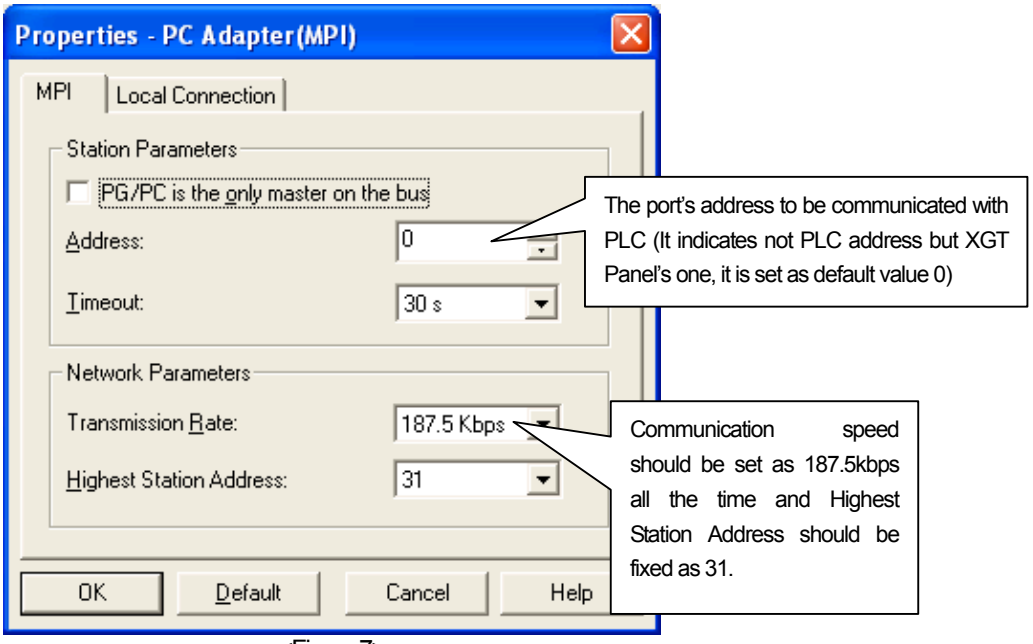

<Figure 7>

(6) You can complete setting process as shown <Figure 7>

25.3 Communication Setting

25.3.1 Setting S7 300/400 PC Adapter

You can set the communication parameters for S7 200 PPI Direct Driver of XGT Panel at XP-Builder. (Refer to XP-Builder manual.) The private program for SIMATIC_S7_STEP7 should be applied to set communication for Siemens S7 300/400.

(1) Setting at XP-Builder

XP-Builder basically provides communication parameter for CPU module loader.

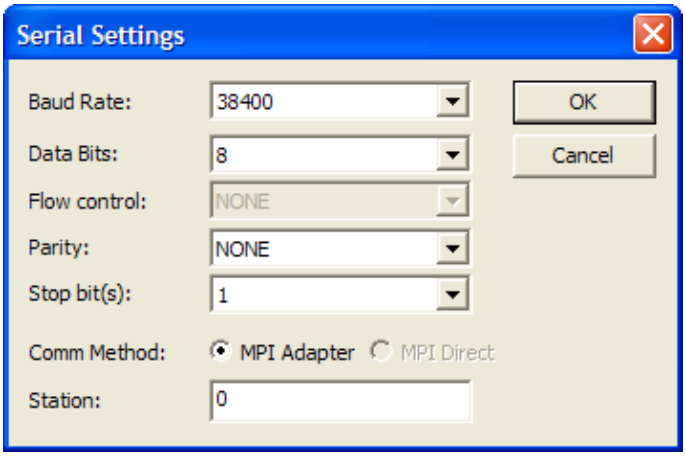

Notice

(1) Checking Communication Status

► If you can not check the communication status of Siemens S7 300/400 CPU module, check the state of XGT Panel through Diagnostics function and PLC information. (Refer to XGT Panel manual.)

(2) Suggestions to set XP-Builder

► When creating a project or communication setting, you need to set the below.

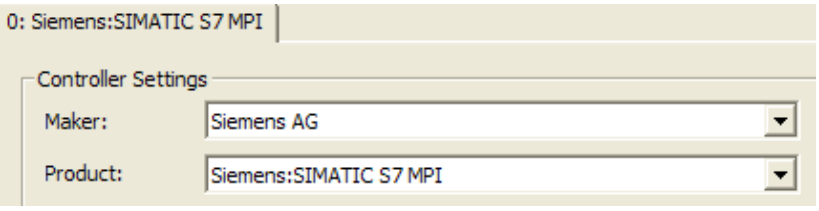

► When connecting Siemens S7 300/400 PC Adapter, make sure to set transmission waiting time as 0ms (Recommended : 0ms)

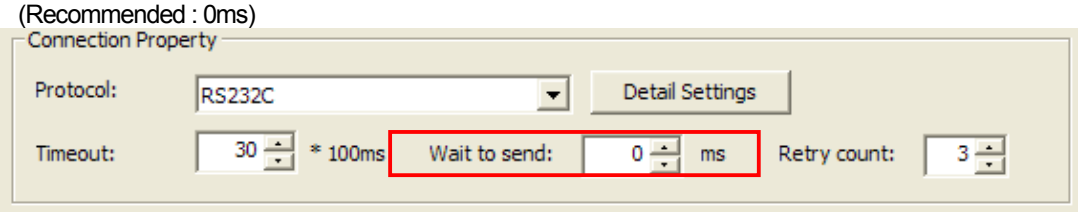

25.4 Available Device

The available devices for XGT Panel are as below.(S7-300/400 CPU 315-2DP is applied to the mentioned device)

Area	Description	Bit Contacts	Word Data	Type	Area(Byte)
I	Input Relay	I0.0~I127.7	IW0~IW126	R	
Q	Output Relay	Q0.0~Q127.7	QW0~QW126	R/W	
T	Timer		TW0~TW255	R	BCD Type
C	Counter		CW0~CW255	R	BCD Type
M	Internal Memory	M0.0~M511.7	MW0~MW510	R/W	
DB	Data Block	DB0.DBX0.0 ~ DB65535.DBX65533.7	DB0.DBW0 ~ DB65535.DBW65533	R/W	

(1) Bit Contacts

► I,Q,M Type : **[Area][Address].[Bit]**

[Area] : I,Q,M,DB
[Address] : Byte unit (Decimal) , Ex.)I,Q : 0~127 , M : 0~511, DB : 0~65533
[Bit] : The value: 0~7
Ex.) I120.7, Q50.3, M511.1, etc.

► DB Type : [Area][Block No.][Address]

[Area] : DB
[Block No.] : Block No. 0~65535 (it can be different depending on CPU memory)
[Address] : Byte unit(Decimal) , Ex.) All 0~65533
[Bit] : 0~7
Ex.) DB100.DBX7500.7 (Block No. 100, the 7th Bit of 7500 Byte)

(2) Word Contacts / Double Word Contacts

► IW,QW,MW Type : **[Area][Address]**

[Area] : IW,QW,MW
[Address] : Byte unit (it should be a multiple of 2) Ex.) 0,2,4,6,8 …
Ex.) IW100, QW50, MW500, etc.

► TW,CW : **[Area][Address]**

[Area] : TW,CW
[Address] : WORD Unit Ex.) 0,1,2,3,4, …
Ex.) TW100, TW101, etc.
Counter and Timer should be set as BCD type.

► DB Type : **[Area][Block No.][Address]**

[Area] : DB
[Block No.] : Block No. 0~65535 (it can be different depending on CPU memory)
[Address] : Word Unit(Decimal) , 0~255
Ex.) DB300.DBW100 (Block No. 300, 100Byte memory)

(3) Applying String

When applying string, make sure to set Using Data Byte Swap(S) at [Common|Basic] setting that is detailed setting option of string.
The offset of string should be set as an even number with byte and the size also should be set as an even number. In case that the size of string is set as 4Byte, make sure to set offset at Extended Properties.

※ DB area is User Defined data block that should be set by a user. Block can be designated between 0~65535(different from memory capacity) and 0~65533 BYTE can be allocated per each block. If you try to read or write it without setting data block, communication error may occur.
Ex.) Supposing that DB200, 10000 BYTE are established -> If you try to 10002, communication error will occur since it is not registered.

Notice

(1) Suggestions

► For the details on device with usage, refer to Inverter Manual.

► The range of device may be different depending on CPU module so refer to each CPU module manual.

Chap.26 Siemens: S7 3964(R)/RK512 Driver

S7 3964(R)/RK512 Driver of Siemens is available since V1.20 so if you use the previous version, please apply XP-Builder and XGT Panel software that are beyond V1.20 from our web-site.

26.1 PLC List

XGT Panel can be connected to the below Siemens PLC.

PLC Type	CPU Module	Connection Mode	Communication type	Connection Module	Remarks
S7 300	CPU312IFM CPU313 CPU314 CPU314IFM CPU315 CPU315-2DP CPU316 CPU316-2DP CPU318-2	CP341 (RS232C)	RS-232C		
		CP341 (RS422/485)	RS422/485 (4wire)		
S7 400	CPU412-1 CPU412-2DP CPU413-1 CPU413-2DP CPU414-1 CPU414-2DP CPU414-3DP CPU416-1 CPU416-2DP CPU416-3DP CPU417-4	CP441-2	RS232C		
			RS422/485 (4wire)		

Notice

(1) The communication parameters of XGT Panel should coincide with the related PLC.
► In the case of Siemens S7 300/400 PLC, you can arrange communication setting and loader program with SIMATIC_S7_STEP7 provided by Siemens.

(2) For 3964(R)/RK512 communication with Siemens PLC, SIMATIC_S7_STEP7 should be installed with CP PtP Param provided when purchasing CP341.

26.2 Wiring Diagram

26.2.1 RS-232 Communication

The wiring for 1:1 RS-232 is as below.

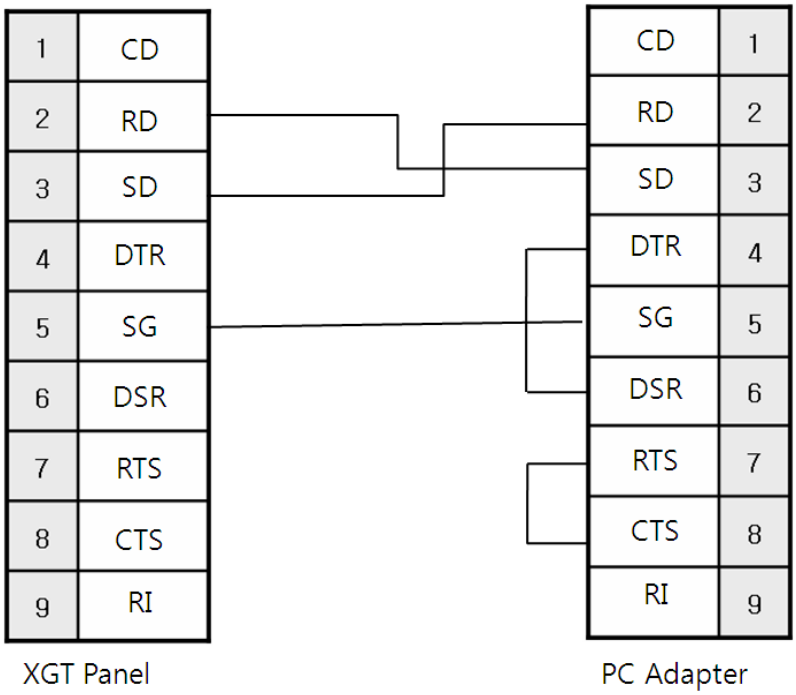

26.2.2 RS-422/485(4wire) Communication

The wiring for RS-422/485(4wire) is as below.

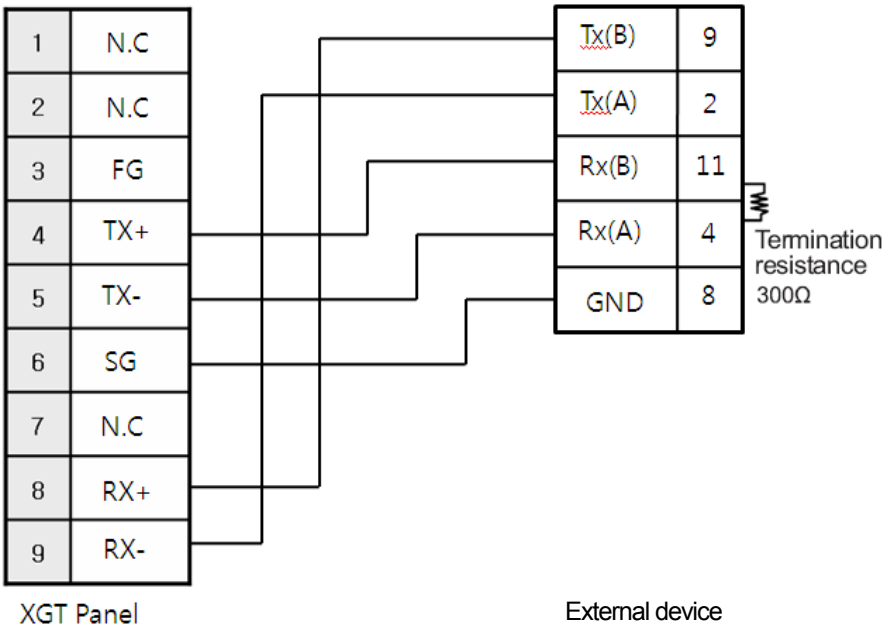

Communication parameter for PLC S7 300/400

Parameter	Composition
Communication speed	It can be selected among 300, 600, 1200, 2400, 4800, 9600, 19200, 38400, 57600, 76800
Parity Bit	It can be selected among EVEN, ODD, NONE
Data Bit	8 Bits
Stop Bit	1 Bit
Communication mode	RS-232 or RS422/485
Error Detection	Using Protocol (With Block Check)
Priority	Low

Notice

(1) Suggestions

- ► **A shielded wire is recommended for stable communication.** For shield wiring, refer to the Chap.2.
- ► When communicating with S7 300/400 CPU Loader, set the unit No. of XGT Panel as 0 and select the unit No. of S7 300/400 PLC as 2 or (1~4) established initially.
- ► Only Using PC Adapter (MPI Adapter) is available for XGT Panel and Direct is scheduled to be available afterward.
- ► For 3964(R)/RK512 communication with P341, refer to the below "Setting for "PLC S7 300/400 CP341의 3964(R)/RK512".

Setting for PLC S7 300/400 CP341 의 3964(R)/RK512 communication

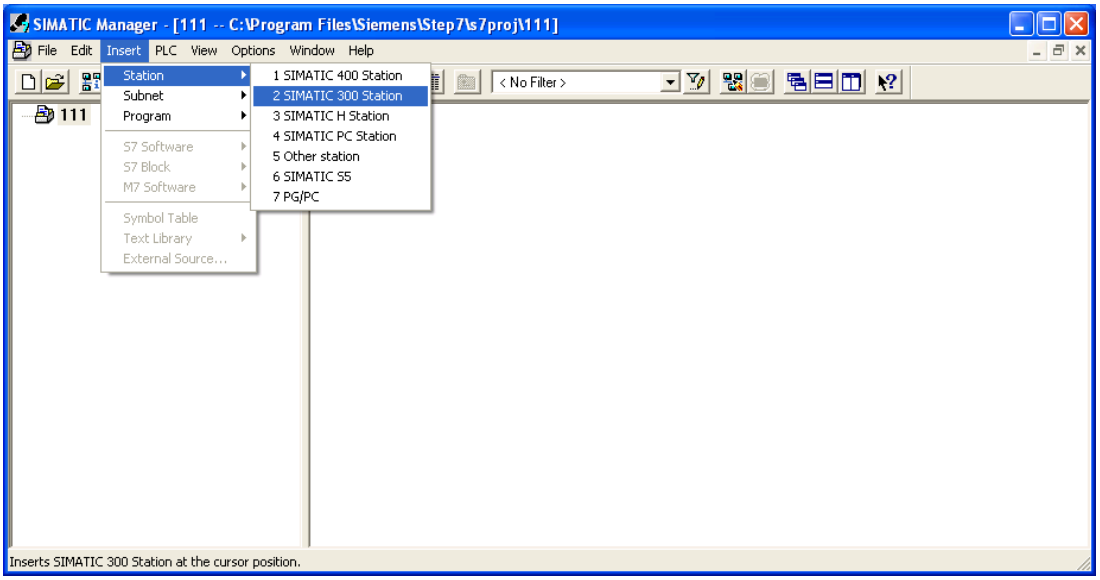

<Figure 1>

1) Execute "SIMATIC Manager" and create a new project.

2) Set [Insert], [Station], [CPU Type that is applied] as shown at <Figure 1> (Ex.: 2 SIMATIC 300 Station)

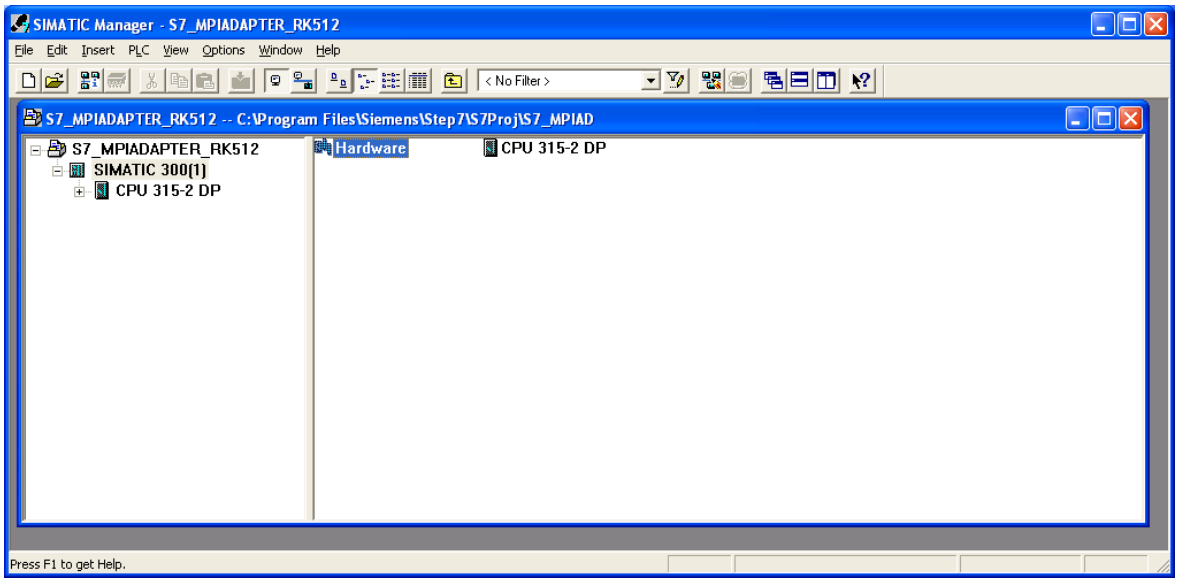

<Figure 2>

3) Select "Hardware" from the screen where CPU315-2 is registered as shown at <Figure 2>.

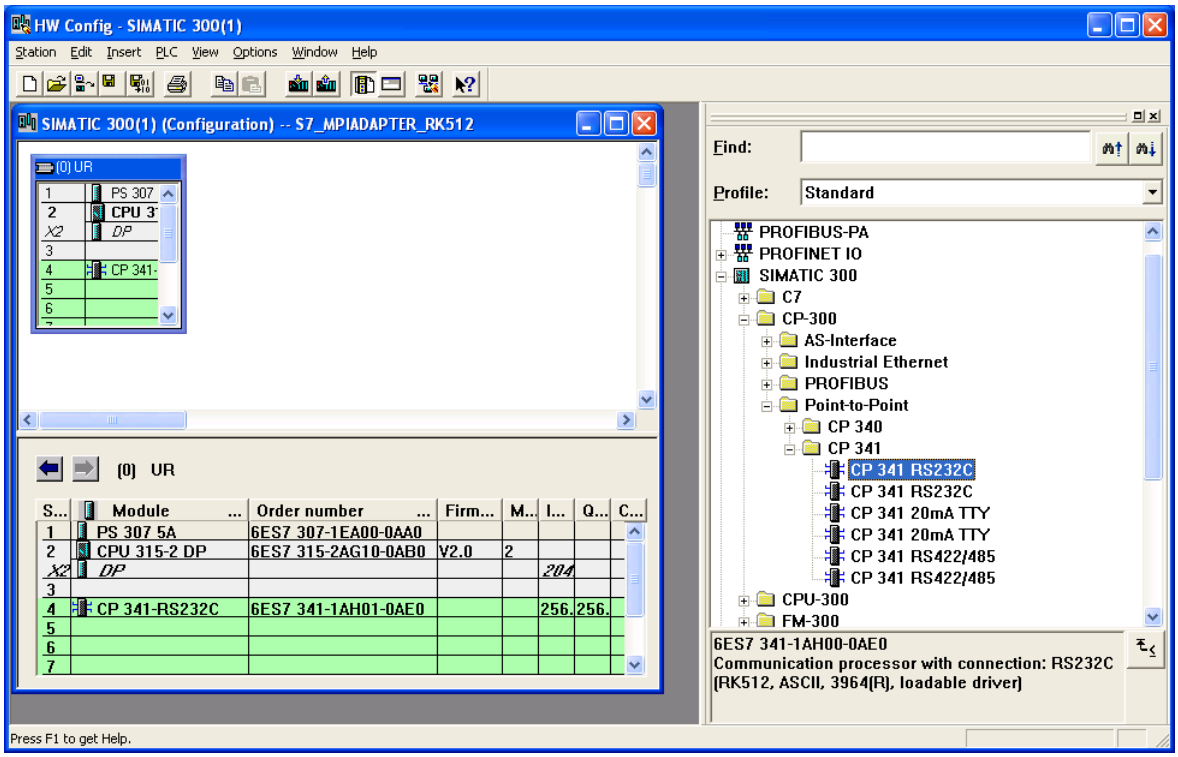

<Figure 3>

4) The screen to register/set the Hardware will be displayed as shown at <Figure 3>. You can register your intended Hardware.

5) If you register CPU and CP341 232 communication module, you can see the registered screen as shown at <Figure 4>.

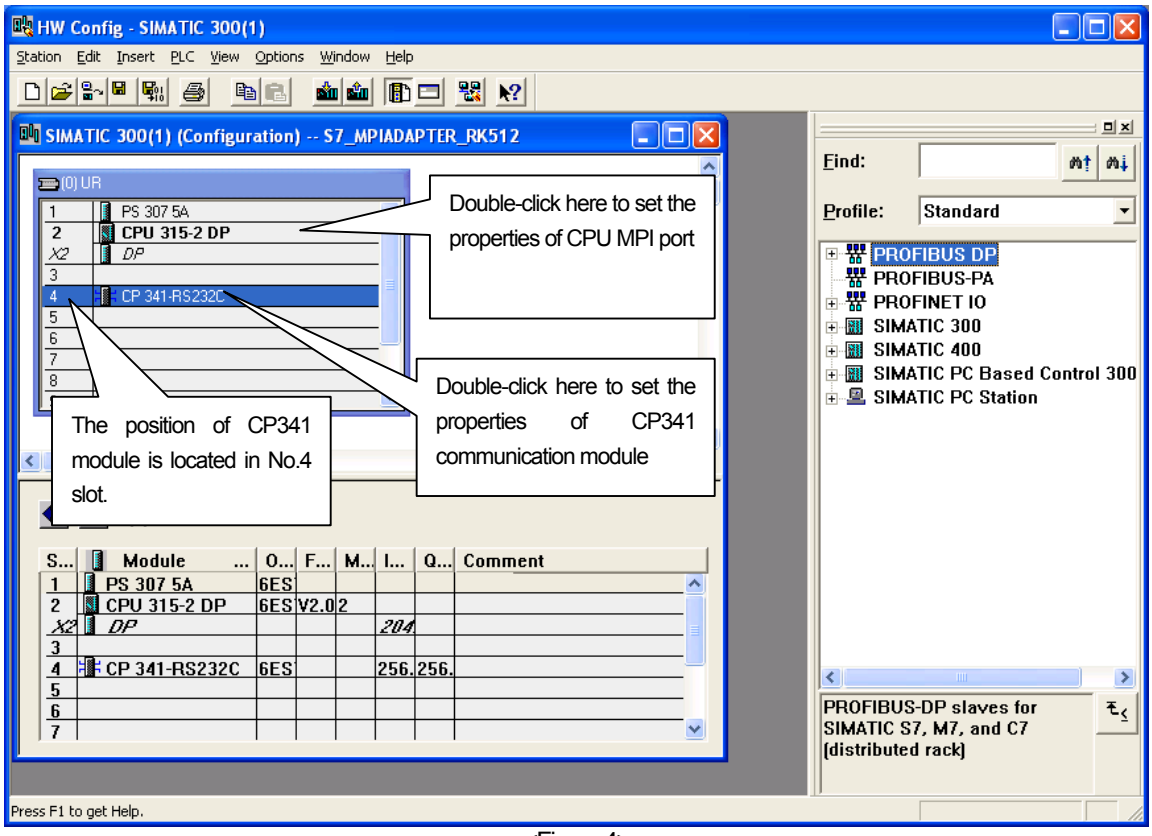

<Figure 4>

6) After setting the details as shown at <Figure 4>, double-click "CPU315-2 DP" of No. 2 slot to establish MPI port of CPU.

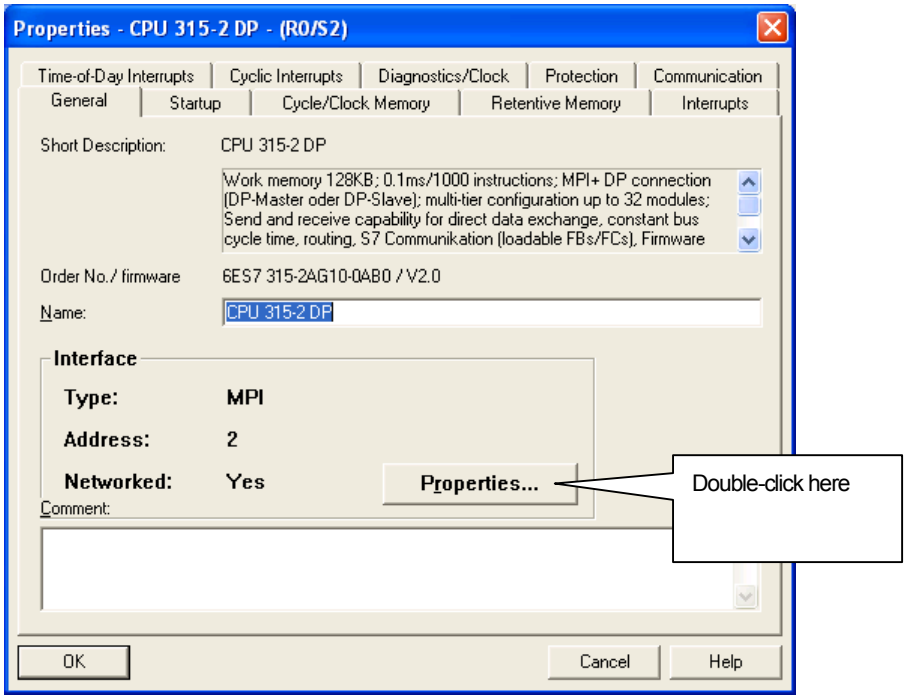

<Figure 5>

7) Click “Properties” as shown at <Figure 5>

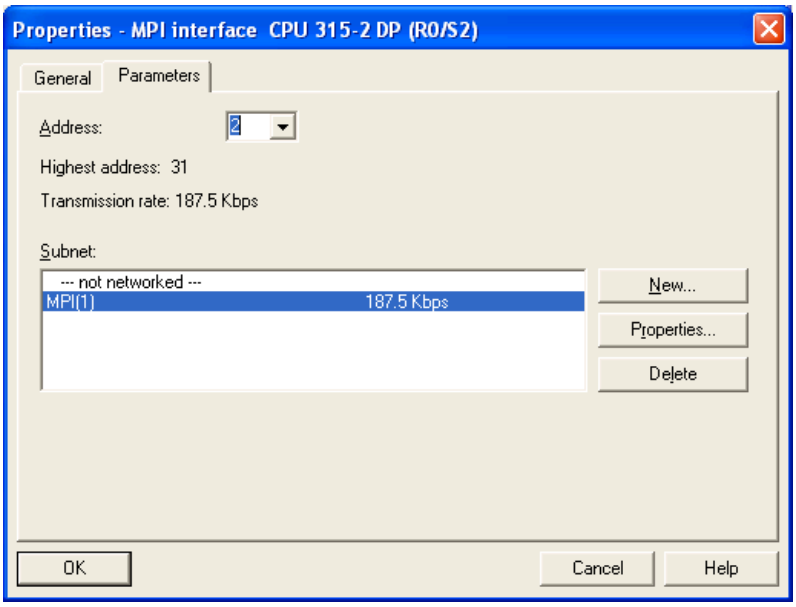

<Figure 6>

8) Set MPI Address(2 as a default value) and MPI Port’s communication speed as shown at <Figure 6>. To adopt 3964(R)/RK512 communication and MPI Adapter, communication speed should be set as 187.5kbps.

9) After setting the details as shown at <Figure 4>, double-click the highlighted area as shown at the above Figure to set communication of CP 341.

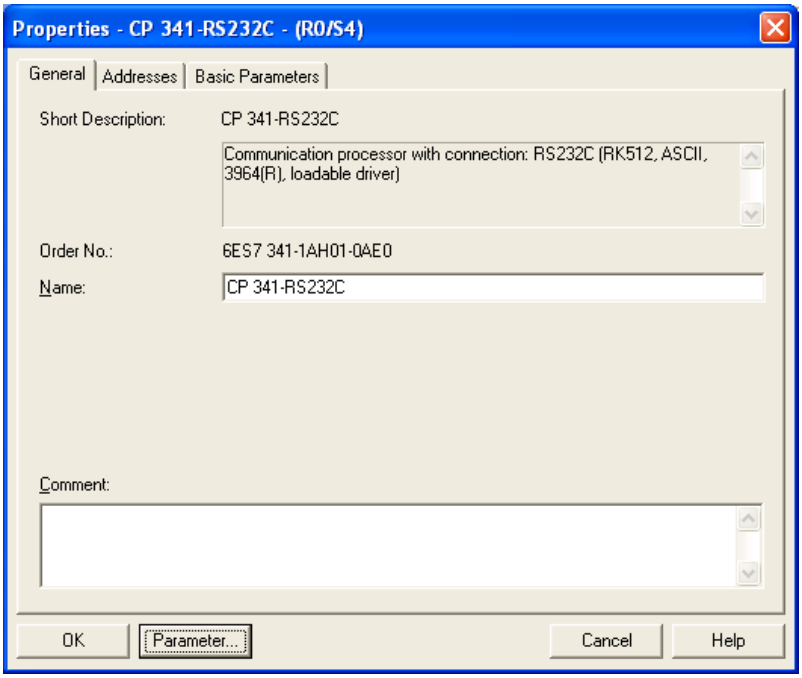

<Figure 7>

10) Select Address tab from <Figure 7>.

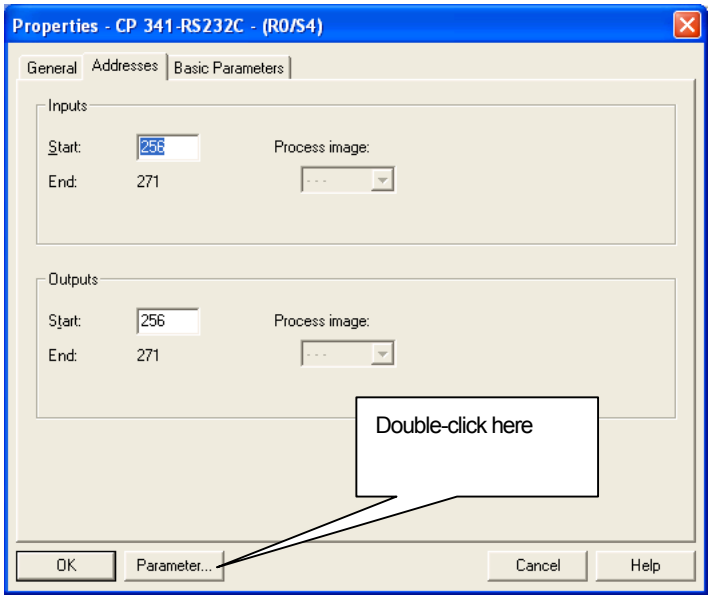

<Figure 8>

11) Apply Input Start Address at <Figure 8> and it is different depending on the poison of slot as shown at <Figure 4>. It is located the 4th position and the values are; Start : 256, End : 271. You set these values as a default without changing it and the values will be used for the below process (when registering communication block related to receive FB7 P_RCV_RK CP341). Click "Parameter" button at <Figure 8>.

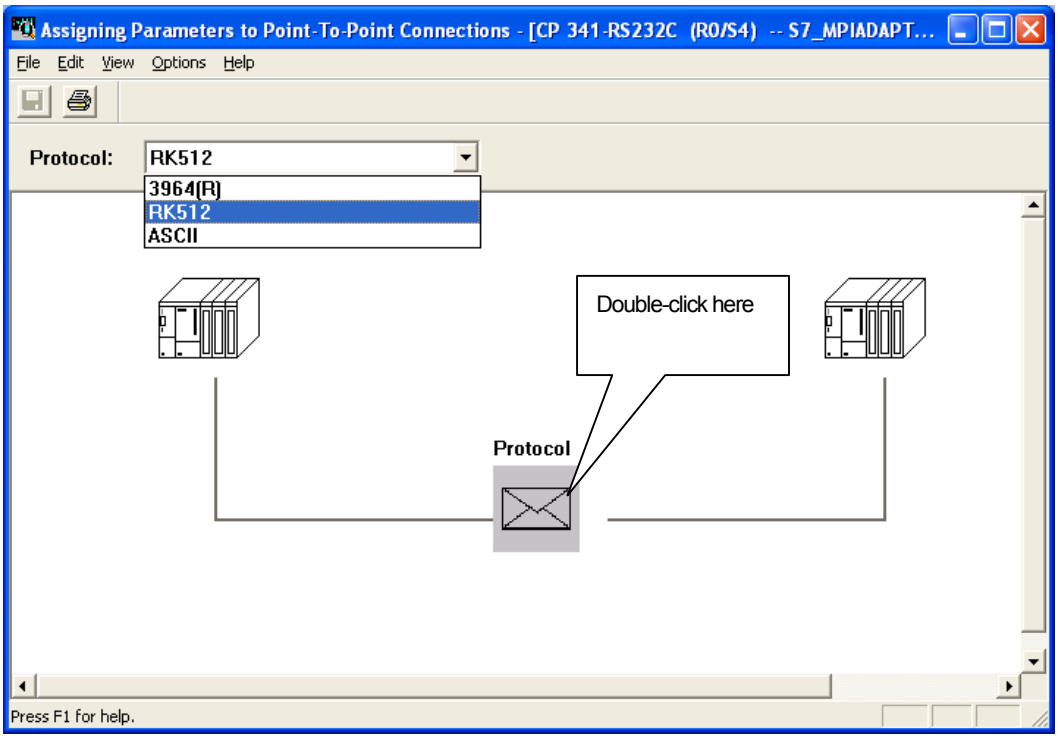

<Figure 9>

12) Select “RK512” for S7 PLC as shown at <Figure 9> and “3964(R)” for S5 PLC. Then, double-click “Protocol” area.

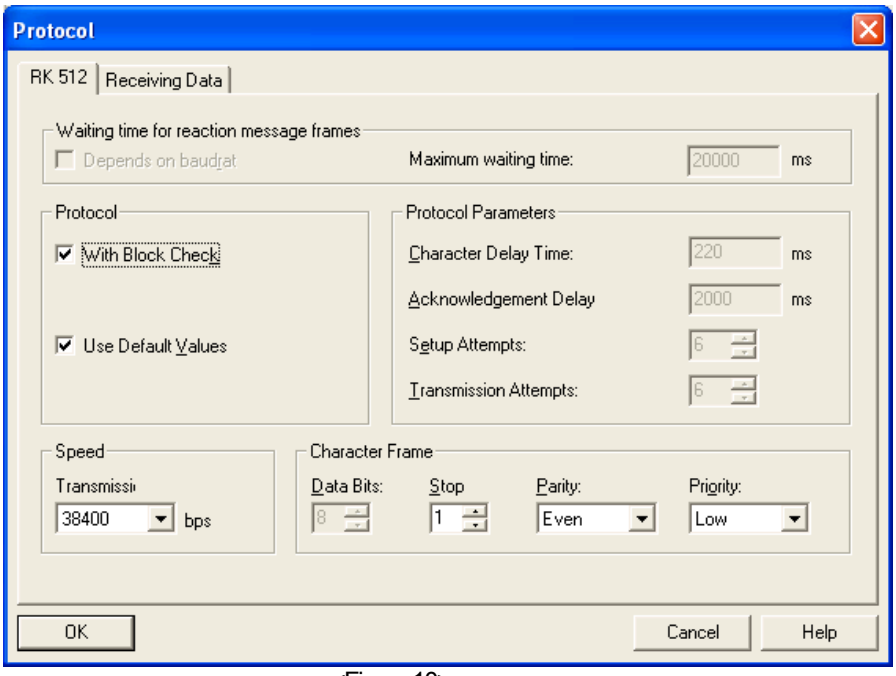

<Figure 10>

13) Set the communication properties as shown at <Figure 10>. Set [Use Default Values] as a default at “Protocol” section and [With Block Check] should be defined by a user. If [With Block Check] is set, that indicates BCC is active so you can set “Block Check(BCC)” in XGT Panel. Set the “Priority” as Low. After completing to set the hardware related to CP 341 module / CPU MPI Port, make out loader program to communicate with the external devices.

CP 341 Making out loader program to set (3964(R)/RK512

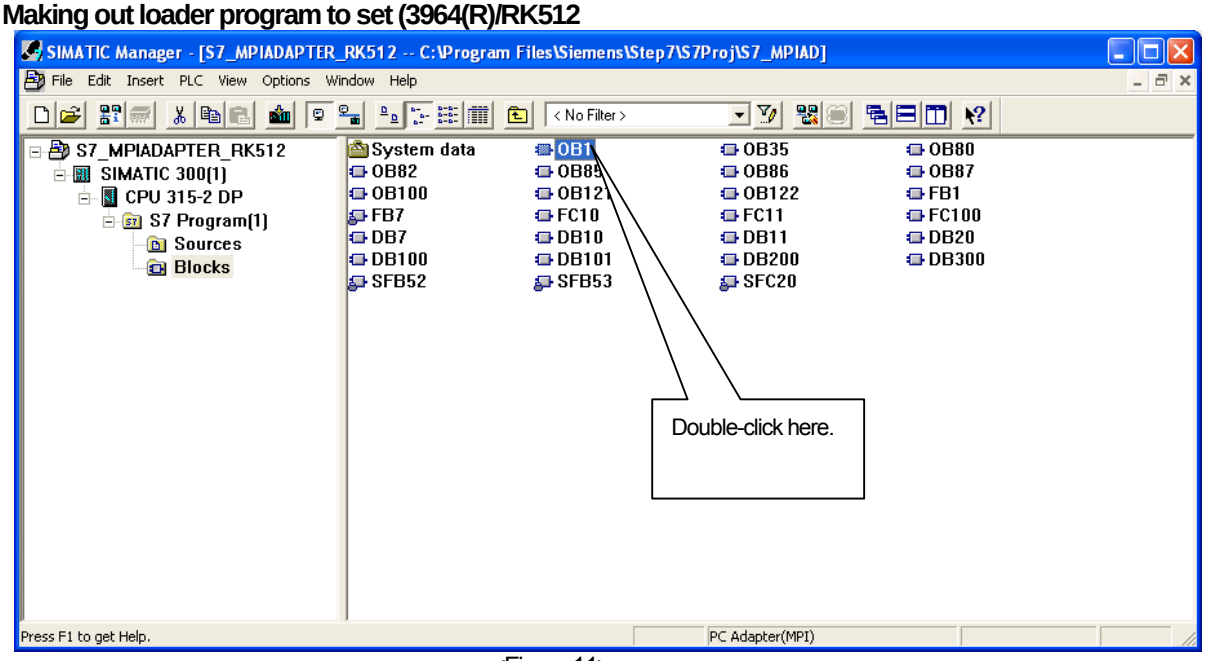

<Figure 11>

14) Double-click "OB1" as shown at <Figure 11> to register communication block related to reception such as "FB7 P_RCV_RK CP341".

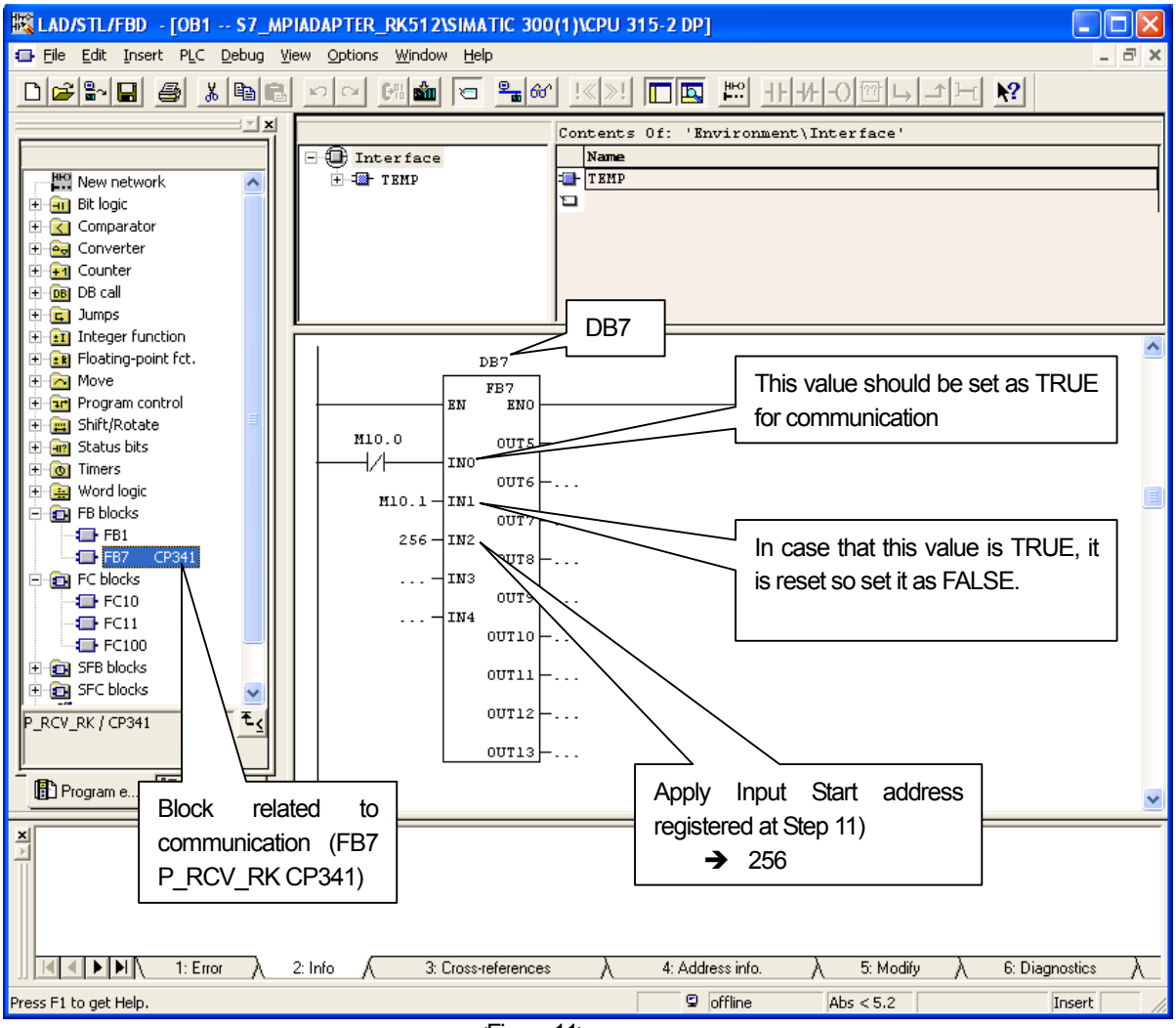

<Figure 11>

15) Among FB Blocks, register "FB7 CP 341"to the loader program step of "OB1" and parameters should be established as the above figure.

That's all for setting for Siemens PLC.

26.3 Communication Setting

26.3.1 Setting S7 300/400 3964(R)/RK512

You can set the communication parameters for S7 300/400 3964(R)/RK512 Driver of XGT Panel at XP-Builder. (Refer to XP-Builder manual.) The private program for SIMATIC_S7_STEP7 should be applied to set communication for Siemens S7 300/400.

(1) Setting at XP-Builder

XP-Builder basically provides communication parameter for CPU module loader.

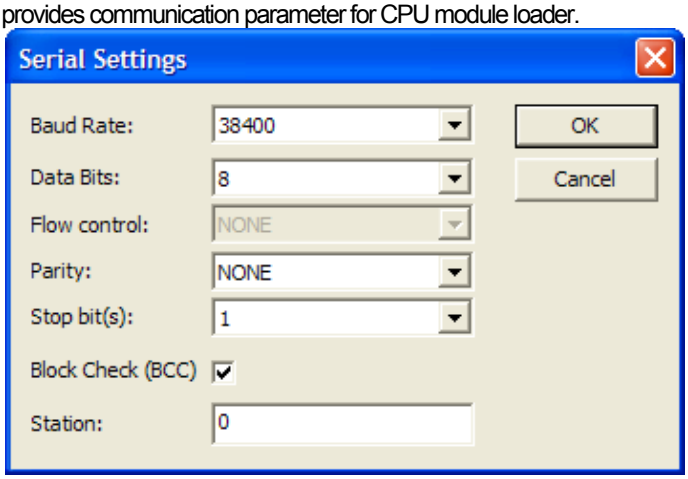

In terms of using Block Check(BCC),if "With Block Check" is applied to "Protocol" properties at the above 13) "Setting for PLC S7 300/400 CP341 with 3964(R)/RK512 communication", check this area.

Notice

(1) Checking Communication Status

► If you can not check the communication status of Siemens S7 300/400 CPU module, check the state of XGT Panel through Diagnostics function and PLC information. (Refer to XGT Panel manual.)

(2) Suggestions to set XP-Builder

► When creating a project or communication setting, you need to set the below.

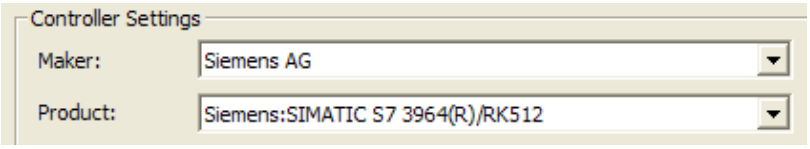

► When RS-422/485 is realized as 1:N, set transmission waiting time flexibly depending on communication structure. (Recommended : 0~50ms)

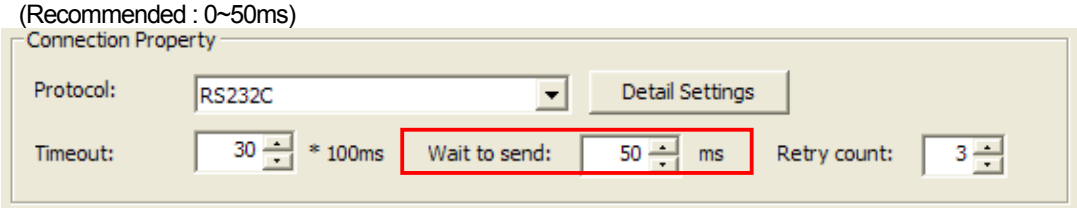

26.4 Available Device

The available devices for XGT Panel are as below. (S7-300/400 CP 341 is applied to the mentioned device)

Area	Description	Bit Contacts	Word Data	Type	Area (Byte)
I	Input Relay	I0.0~I127.7	IW0~IW126	R	
Q	Output Relay	Q0.0~Q127.7	QW0~QW126	R	
T	Timer		TW0~TW255	R	BCD Type
C	C		CW0~CW255	R	BCD Type
M	Internal Memory	M0.0~M255.7	MW0~MW254	R	
DB	Data Block	DB0.DBX0.0 ~ DB255.DBX511.7	DB0.DBW0 ~ DB255.DBW510	R/W	

(1) Bit Contacts

► I,Q,M Type : **[Area][Address].[Bit]**

[Area] : I,Q,M,DB
[Address] : Byte Unit (Decimal) , Ex.)I,Q are 0~127 , M is 0~511
[Bit] : 0~7
Ex.) I120.7, Q50.3, M511.1, etc.

► DB Type: [Area][Block No.][Address]

[Area] : DB
[Block No.] : Block No. 0~255
[Address] : Byte Unit (Decimal) , Ex.) All are 0~511
[Bit] : 0~7
Ex.) DB100.DBX500.7 (Block No. 100, the 7th Bit of 500 Byte)

(2) Word Contacts / Double Word Contacts

► IW,QW,MW Type: **[Area][Address]**

[Area] : IW,QW,MW
[Address] : Byte Unit (It should be a multiple of 2) Ex.) 0,2,4,6,8 …
Ex.) IW100, QW50, MW200, etc.

► TW,CW : **[Area][Address]**

[Area] : TW,CW
[Address] : Word Unit Ex.) 0,1,2,3,4, …
Ex.) TW100, TW101, etc.
Counter and Timer should be set as BCD type.

► DB Type : **[Area][Block No.][Address]**

[Area] : DB
[Block No.] : Block No. 0~255
[Address] : Byte unit(Decimal) , 0~511 (It should be a multiple of 2)
Ex.) DB200.DBW100 (Block No. 200, the 100th Byte memory staring 1WORD)

(3) Applying String

When applying string, make sure to set Using Data Byte Swap(S) at [Common|Basic] setting that is detailed setting option of string.
The offset of string should be set as an even number with byte and the size also should be set as an even number. In case that the size of string is set as 4Byte, make sure to set offset at Extended Properties.

Notice

(1) Suggestions

► For the details on device with usage, refer to Inverter Manual.
► The range of device may be different depending on CPU module so refer to each CPU module manual.

Chapter27 MITSUBISHI: MELSEC-FX CPU Driver

MITSUBISHI's MELSEC-FX CPU driver is provided from V1.22. If you use the version prior to V1.22, please use XP-Builder and XGT Panel software with V1.22 or higher from the homepage.

27.1 PLC List

XGT Panel is available for CPU Direct connection with MELSEC-FX PLC.

PLC name	CPU module	Connection type	Communication type	Connection module	Remarks
MELSEC-FX	FX1N FX2N FX1NC FX2NC FX0N FX1S FX2 FX2C	CPU Direct	RS-232C or RS422(4wire)	For RS-232C, Melsec loader dedicted cable , For RS-422, users' connection (See connection diagram)	

Tip

(1) Terminology

► CPU Direct: This refers to conducting serial communication through CPU module loader port.

(2) MELSEC PLC does not need separate configuration.

(3) Cautions

► Please see users' manual of MELSEC-FX for detailed supporting information. Also, supporting items may be changed by MITSUBISHI regardless of this product.

27.2 Wiring Diagram

27.2.1 RS-232C communication method

For wiring of 1:1 RS-232 communication method, use the dedicated loader cable provided by MITSUBISHI
If it is MELSEC FX FX2N, (Use **MW-500A and Mitsubishi PLC FX Series Program Control I/F Cable(25 pins-8 pins))**

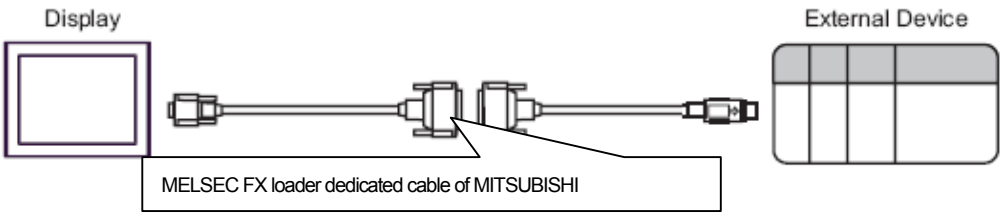

27.2.2 RS-422 (4wire) communication method

The connection of RS-422 (4wire) communication method is as follows.

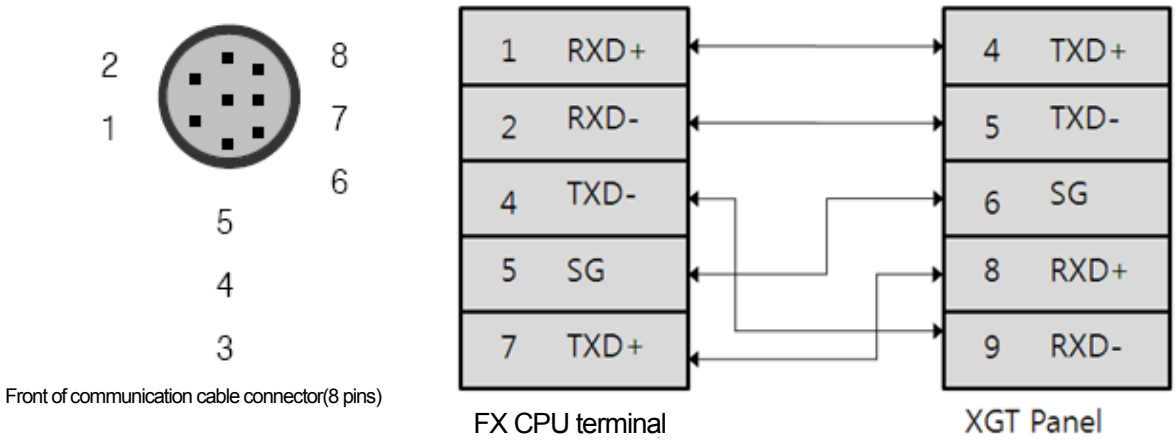

The communication parameters of MITSUBISHI MELSEC FX CPU are as follows.

Parameter	composition
Communication speed	9600 ~ 115200, It depends upon the type of CPU.
Parity Bit	EVEN
Data Bit	7 Bits
Stop Bit	1 Bit
Communication type	RS-232 or RS422 (4Wire)

Tip

(1) Cautions

- ► **We recommend shield connection for stable communication.** Please see the Chapter 2 for shield connection method.
- ►The connector and pin arrangement may be different according to the type of PLC module.

27.3 Communication Setting

27.3.1 MITSUBISHI MELSEC-FX CPU configuration

The parameters of MITSUBISHI MELSEC FX CPU communication of XGT Panel are configured from the XP-Builder. (See users' manual for XP-Builder)

(1) Configuration from XP-Builder

XP-Builder basically provides communication parameter for CPU module loader.

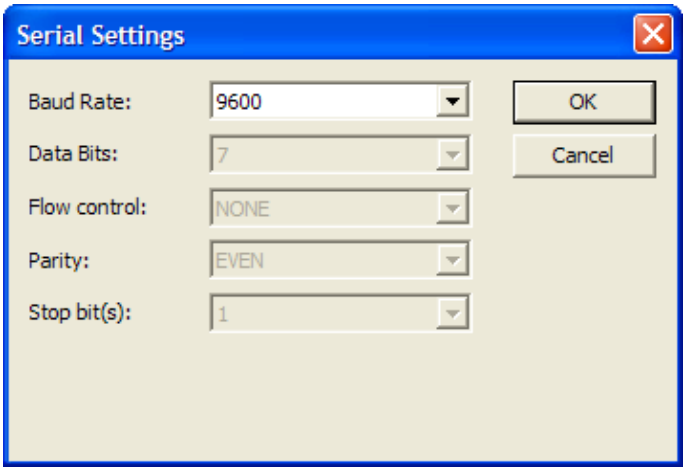

Tip

(1) Check out communication status

► If the status of communication with the MITSUBISHI MELSEC FX CPU module cannot be verified, use Diagnostics function and PLC information function of XGT Panel to verify the communication status of XGT Panel. (See users' manual of XGT Panel)

(2) Cautions when configuring XP-Builder

► Configure as follows when generating project or configuring communication.

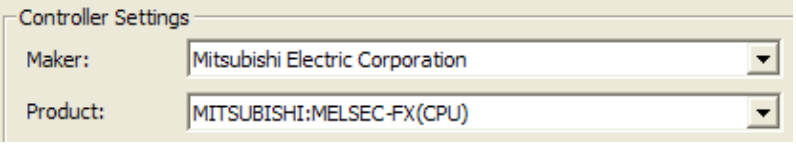

► Even when composing with RS-422, 1:1 should be used instead of 1:N.
Use the transmission waiting time flexibly according to the communication composition. (Recommended: 0ms)

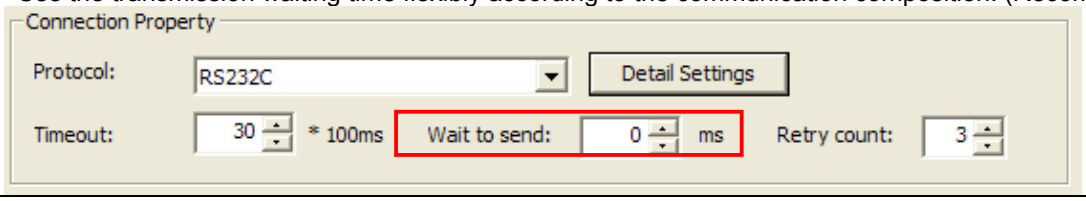

27.4 Available devices

Devices to be available for XGT Panel are as follows.
Current version does not support 'R' Area.

27.4.1 Devices available for FX CPU

Area	Bit contact point	Word data	Remarks
X	X000 ~ X377	X000 ~ X360	Octal number[1)]
Y	Y000 ~ Y377	Y000 ~ Y360	Octal number[1)]
M	M0000 ~ M7679	M0000 ~ M7664	Decimal number[2)]
	M8000 ~ M8511	M8000 ~ M8496	
S	S0000 ~ S4095	S0000 ~ S4080	Decimal number[2)]
TS	TS000 ~ TS511	-	Decimal number[3)]
CS	CS000 ~ CS255	-	Decimal number[3)]
TN	-	TN000 ~ TN511	Decimal number[4)]
CN	-	CN000 ~ CN199	Decimal number[4)]
		CN200 ~ CN255	
D	-	D0000 ~ D7999	Decimal number[5)]
		D8000 ~ D8511	

1) X, Y is Octal number. (Bit device)
Bit contact point(You can use octal number system.)
Ex) X000~X007, X010~X017, X020~X027, …… X070~X077, X100~X107, X110~X117….
Word contact point(Configure it as multiples of 16Bit.)
Ex) X000, X020, X040, X060, X100, X120 ……

2) M, S is decimal number. (Bit device)
Bit contact point(You can use decimal number system.)
Ex) M0000~M0009, M0010~M0019, M020~M029, ……
Word contact point(Configure it as multiples of16Bit.)
Ex) M0000, M0016, S032, S048, S064……

3) TS, CS is decimal number. (Bit device)
Bit contact point(You can use decimal number system.)
Ex) TS0000 ~ TS511

4) TN, CN is decimal number. (Word device)
Word contact point
Ex) TN0 ~ TN511, CN0 ~ CN255
※Since CN0~CN199(16Bit) and CN200~CN255(32 Bit) are different device areas,
- CN199 cannot be used as 32bit device. (CN199 + CN200 are different devices)
- CN0~CN199 area and CN200~CN255 area cannot be used consecutively. (That means, if continuous data (logging, data list view, recipe, etc.) is used from CN190 to CN210, it shall be divided into two areas like CN190~CN199, and CN200 - CN210.
※When using CN200~CN255, select 32 bit from figure displayer, figure input, and conduct "continuous copy," then it is generated like CN200, CN202, CN204…. Since it is 32bit device from CN200, the address should be increased by 1. That means, you have to revise it as CN200, CN201, CN202, CN203….

5) D is decimal number. (Word device)
Word contact point
Ex) D0 ~ D7999, D8000 ~ D8511
※ Since D0000 ~D7999 (16bit) and DS8000~DS8511(32Bit) are different device areas,
- D7999 cannot be used as 32 Bit device. (CN199 + CN200 are different devices)
- D0~D7999 area and D8000~D8496 area cannot be used consecutively. (That means, if continuous data (logging, data list view, recipe, etc.) is used from D7990 to D8010, then it shall be divided into two areas like D7990~D7999, and D8000- D8010.

※**Memory located in M8000 ~ and D8000 ~** are special area. This can be used by the system. Also, this area includes an unused area. Therefore, please see the manual of Mitsubishi FX CPU PLC in order to use this area.

Tip

(1) Cautions

► Please see the manual for XP-Builder for how to use the device and details.

► Please be sure not to be out of the range of device area.

► The range of device may be varied according to CPU module.

27.4.2 Available device by MELSEC-FX CPU

(1) When using FX1

Area	Bit contact point	Word data	Remarks
X	X000 ~ X167	X000 ~ X160	Octal number[1)]
Y	Y000 ~ Y167	Y000 ~ Y160	Octal number[1)]
M	M0000 ~ M1023 M8000 ~ M8255	M0000 ~ M1008 M8000 ~ M8240	Decimal number[2)]
S	S0000 ~ S0999	S0000 ~ S0992	Decimal number[2)]
TS	TS000 ~ TS245	-	Decimal number[3)]
CS	CS000 ~ CS135 CS200 ~ CS255	-	Decimal number[3)]
TN		TN000 ~ TN245	Decimal number[4)]
CN		CN000 ~ CN135 CN235 ~ CN255	Decimal number[4)]
D		D0000 ~ D0127 D8000 ~ D8069	Decimal number[5)]

(2) When using FX2, FX2, FX2C, FX0N, FX0S

Area	Bit contact point	Word data	Remarks
X	X000 ~ X337	X000 ~ X320	Octal number[1)]
Y	Y000 ~ Y337	Y000 ~ Y320	Octal number[1)]
M	M0000 ~ M1535 M8000 ~ M8255	M0000 ~ M1520 M8000 ~ M8240	Decimal number[2)]
S	S0000 ~ S0999	S0000 ~ S0992	Decimal number[2)]
TS	TS000 ~ TS245	-	Decimal number[3)]
CS	CS000 ~ CS255	-	Decimal number[3)]
TN		TN000 ~ TN255	Decimal number[4)]
CN		CN000 ~ CN199 CN235 ~ CN255	Decimal number[4)]
D		D0000 ~ D2999 D8000 ~ D8255	Decimal number[5)]

※D1000 ~D2499 is file register used by FX0N. In order to use this area, configure it as file register from FX0N CPU.

(3) When using FX1S

Area	Bit contact point	Word data	Remarks
X	X000 ~ X017	X000 ~ X000	Octal number[1)]
Y	Y000 ~ Y015	Y000 ~ Y000	Octal number[1)]
M	M0000 ~ M0511	M0000 ~ M0496	Decimal number[2)]
	M8000 ~ M8255	M8000 ~ M8240	
S	S0000 ~ S0127	S0000 ~ S0112	Decimal number[2)]
TS	TS000 ~ TS063	-	Decimal number[3)]
CS	CS000 ~ CS031 CS235 ~ CS255	-	Decimal number[3)]
TN		TN000 ~ TN063	Decimal number[4)]
CN		CN000 ~ CN031	Decimal number[4)]
		CN235 ~ CN255	
D		D0000 ~ D0255 D1000 ~ D2499	Decimal number[5)]
		D8000 ~ D8255	

※D1000 ~D2499 is a file register used by FX1S. In order to use this area, configure as file register at FX1S CPU.

(4) When using FX1N, FX1NC

Area	Bit contact point	Word data	Remarks
X	X000 ~ X177	X000 ~ X160	Octal number[1)]
Y	Y000 ~ Y177	Y000 ~ Y160	Octal number[1)]
M	M0000 ~ M1535	M0000 ~ M1520	Decimal number[2)]
	M8000 ~ M8255	M8000 ~ M8240	
S	S0000 ~ S0999	S0000 ~ S0992	Decimal number[2)]
TS	TS000 ~ TS255	-	Decimal number[3)]
CS	CS000 ~ CS255	-	Decimal number[3)]
TN		TN000 ~ TN255	Decimal number[4)]
CN		CN000 ~ CN199	Decimal number[4)]
		CN200 ~ CN255	
D		D0000 ~ D7999	Decimal number[5)]
		D8000 ~ D8255	

※Since D0000 ~D7999 and DS8000~DS8255 are different device areas, 32bit device cannot be used for D7999. Also, D0~D7999 Area and D8000~D8240 Area cannot be used each other consecutively. (i.e. If continuous data (logging, data list view, recipe, etc.) is used from D7990 to D8010, it is divided by two areas like D7990-D7999 and D8000-D8010.

(5) When using FX2N, FX2NC

Area	Bit contact point	Word data	Remarks
X	X000 ~ X377	X000 ~ X360	Octal number[1)]
Y	Y000 ~ Y377	Y000 ~ Y360	Octal number[1)]
M	M0000 ~ M3071	M0000 ~ M3056	Decimal number[2)]
	M8000 ~ M8255	M8000 ~ M8240	
S	S0000 ~ S0999	S0000 ~ S0992	Decimal number[2)]
TS	TS000 ~ TS255	-	Decimal number[3)]
CS	CS000 ~ CS255	-	Decimal number[3)]
TN		TN000 ~ TN255	Decimal number[4)]
CN		CN000 ~ CN199	Decimal number[4)]
		CN200 ~ CN255	
D		D0000 ~ D7999	Decimal number[5)]
		D8000 ~ D8255	

※Since D0000 ~D7999 and DS8000~DS8255 are different device areas, 32bit device cannot be used for D7999. Also, D0~D7999 Area and D8000~D8240 Area cannot be used each other consecutively. (i.e. If continuous data (logging, data list view, recipe, etc.) is used from D7990 to D8010, it is divided by two areas like D7990-D7999 and D8000-D8010.

(6) When using FX3U, FX3UC

Area	Bit contact point	Word data	Remarks
X	X000 ~ X377	X000 ~ X360	Octal number[1)]
Y	Y000 ~ Y377	Y000 ~ Y360	Octal number[1)]
M	M0000 ~ M7679	M0000 ~ M7664	Decimal number[2)]
	M8000 ~ M8511	M8000 ~ M8496	
S	S0000 ~ S4095	S0000 ~ S4080	Decimal number[2)]
TS	TS000 ~ TS511	-	Decimal number[3)]
CS	CS000 ~ CS255	-	Decimal number[3)]
TN		TN000 ~ TN511	Decimal number[4)]
CN		CN000 ~ CN199	Decimal number[4)]
		CN200 ~ CN255	
D		D0000 ~ D7999	Decimal number[5)]
		D8000 ~ D8511	

※Since D0000 ~D7999 and DS8000~DS8255 are different device areas, 32bit device cannot be used for D7999. Also, D0~D7999 Area and D8000~D84960 area cannot be used each other consecutively. (i.e. If continuous data (logging, data list view, recipe, etc.) is used from D7990 to D8010, it is divided by two areas like D7990-D7999 and D8000-D8010.

Chapter 28 LS Mecapion

28.1 List of devices available to connect

XGT Panel can be connected to LS Mecapion servo as shown below.

Series	Module	Connection type	Communication type	Connection Module	Remarks
APD-VS	All types	CN3	RS-232C	Main body	-
APD-VP					
APD-VK					
APD-V3S					

28.2 Wiring diagram

28.2.1 Direct connection type

When connecting XGT Panel to LS Mecapion servo drive by direct connection type(RS-232C), it is shown as below.

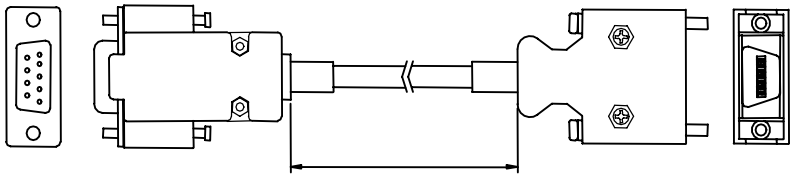

[XGT Panel] [Servo drive- CN3]

Description	RS-232C Port	Servo drive-CN3
Connector name	HDEB-9S	10114-3000VE
Case name	3600-09-G-L	10314-52A0-008
Wiring	No.2(RXD)	No.6(TXD)
	No.3(TXD)	No.5(RXD)
	No.5(GND)	No.11, No.12(GND)
	Do not connect	Case(Shield)
Cable length	1,2,3,5[m]	

Tip

(1) Use the RS-232C loader cable provided from LS Mecapion.

28.3 Communication Setting

28.3.1 Direct connection type

The communication parameter of XGT Panel is configured from the XP-Builder. (Please see the manual for how to use XP-Builder.)

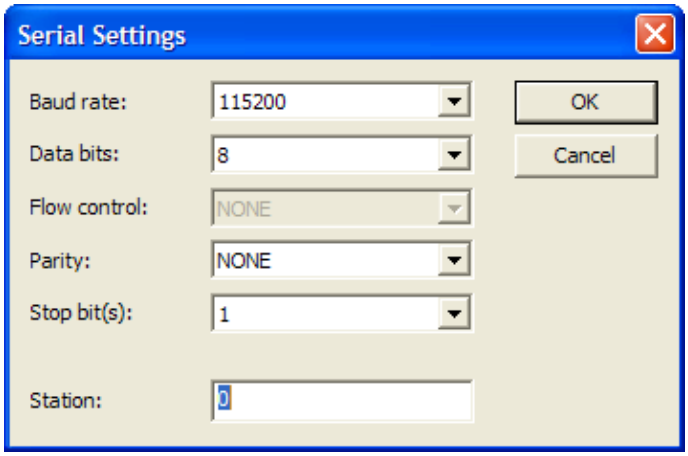

- Baud rate (transmission speed): Designate the transmission speed as same as the configured value of the system parameter [PE-202] of the servo drive.

[PE-202] value	Baud rate
0	9600
1	19200
2	38400
3	57600

- Station address: Set the station address matched to the value specified in the system parameter [PE-207] of servo drive.

Tip

(1) Check communication status

► If you do not know the communication status, use Diagnostics function and PLC Information function on the XGT Panel to check the communication status of the XGT Panel. (Please see the user's manual of XGT Panel.)

(2) Cautions when configuring XP-Builder

► You should configure as below for creating project or configure communication.

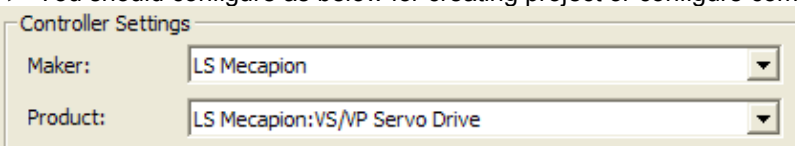

28.4 Available devices

The devices available for XGT Panel are as follows.

Area	Size	Bit contact point	Word data	Remarks
%MW	360 points	%MW00000 ~ %MW359F	%MW0000 ~ %MW359	

- The servo driver only supports 32-bit devices. When designating word device, designate it as 32-bit type.
- When designating word device, only even number of devices can be designated to monitor correct data value.
-

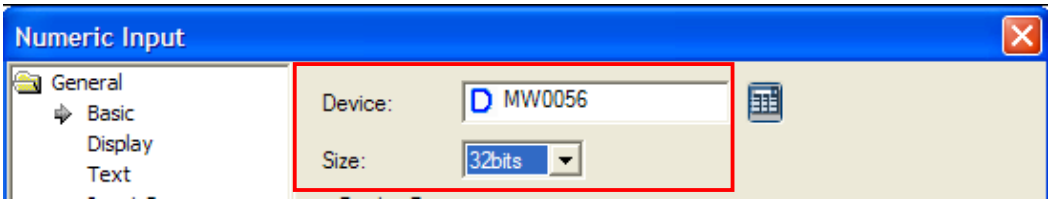

Tip

(1) Cautions

► Please see the users' manual of XP-Builder for how to use device and details.

► Be sure not be out of the range of device area.

► There is writing prohibited area in some of servo driver memory. Please be careful of this. Please see servo driver manual for more details.

Chapter29 Schneider Electric Industries: Modbus ASCII Master

Modbus RTU driver is provided from V1.20. Users using previous versions of the V1.20 should use V1.20 or higher XP-Builder and XGT Panel device software from homepage.

29.1 Modbus Protocol Overview

Modbus protocol is a standardized open-type protocol used for communication between server and clients. According to function code, it is operated by data read/write. The communication between devices using Modbus protocol uses server-client function which is processed in only one client.

Features		ASCII mode
Signal system		8bit Hex ASCII code
Number of data per one character	Start bit	1
	Data bit	8
	Parity bit	Even, Odd, None
	Stop bit	1 or 2
Error check		LRC (Longitudinal Redundancy Check)
Starting of frame		Colon character (':', 0x3A)

29.1.1 Frame structure

The frame structure in the Modbus ASCII mode is as shown below.

Category	Start	Station address	Function code	Data	Error check	Closing
Size(byte)	1 (':')	2	2	N	2	2(CRLF)

(1) Feature of ASCII mode
- (a) Communicates it with hexadecimal number.
- (b) The starting character is Colon(':'), and the end of the frame is identified by carriage return(0x0d) – line feed(0x0a) (CRLF).

(2) Address area
- (a) This is composed of 2 bytes.
- (b) When using XGT Cnet I/F module, the station address can be set up between 0~31.
- (c) 0 is used as the station address of the client.
- (d) When the server responses, it includes its own address in the response frame to figure out the client's response.

(3) Data area
- (a) Uses hexadecimal number (Hex) data to transmit data, and the data structure is changed according to each function code.
- (b) In case of normal frame response, it responses with normal data.
- (c) In case of receiving abnormal frame, it responses with error code.

(4) Error check area

Uses LRC checking method with 2 bytes to determine whether the frame is normal.

(5) Modbus address rules

The address within data begins 0, and it is same with the value which subtracts 1 from Modbus memory. Therefore, Modbus address 2 is same with address 1 within data.

29.1.2 Data and address

The characteristics in expressing Modbus protocol data and address are as follows.

(1) It uses hexadecimal number (Hex.) data as default form.
(2) The meaning of each function code is shown in the table below.

Code	Purpose	Used area	Address	Maximum response data
01	Bit individual / consecutive read	Bit output	0XXXX	976 bit
02	Bit individual / consecutive read	Bit input	1XXXX	976 bit
03	Word individual / consecutive read	word output	4XXXX	61word
04	Word individual / consecutive read	word input	3XXXX	61word
05	bit individual write	Bit output	0XXXX	1 bit
06	word individual write	word output	4XXXX	1 word
0F	bit consecutive write	Bit output	0XXXX	944 bit
10	word consecutive write	word output	4XXXX	59 word

29.2 Wiring Diagram

The PLC connected to XGT Panel through Modbus communication may have different connection type according to the manufacturer. Please see the users' manual for each PLC for exact connection.
This manual will explain about the connection to XGT PLC of LS Industrial Systems.

29.2.1 RS-232C

The connection method to connect Modbus communication with RS-232C type is same as general RS-232C connection method.

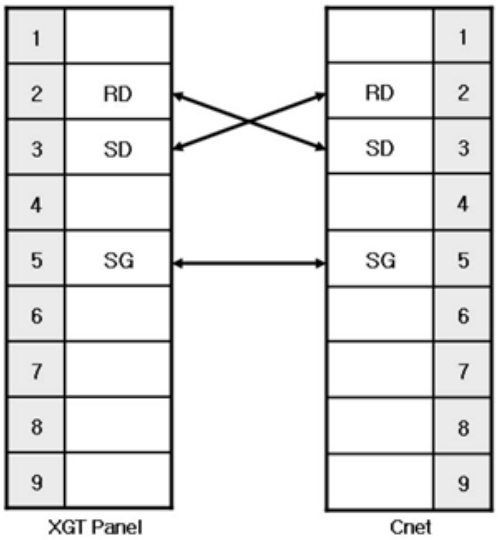

29.2.2 RS-422

The connection method to connect Modbus communication with RS-422 type is same as general RS-422 connection method.

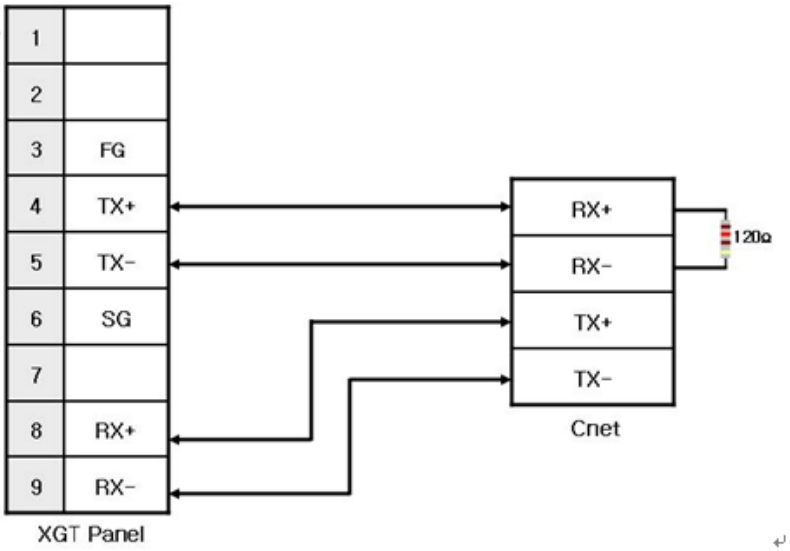

29.2.3 RS-485

The connection method to connect Modbus communication with RS-485 type is same as general RS-485 connection method.

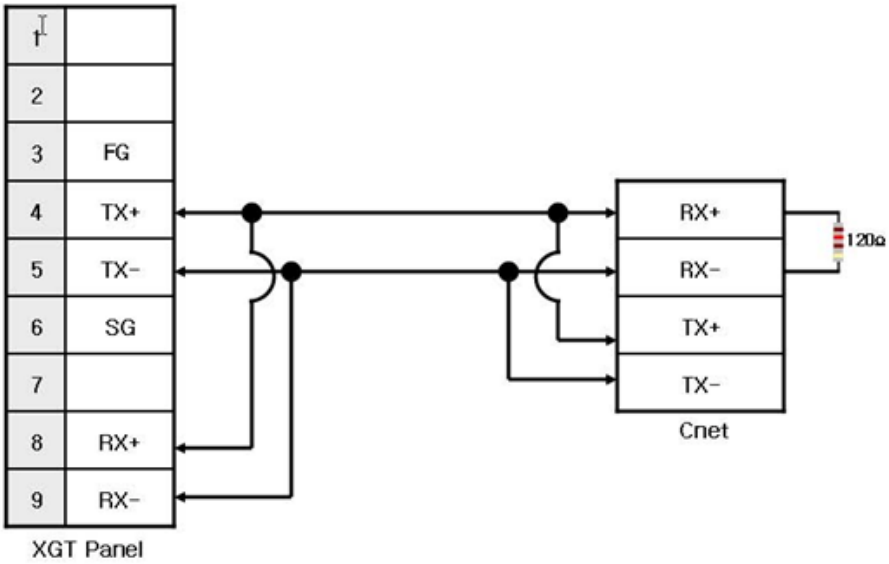

Tips

(1) Cautions

► The connector and pin arrangement may be different according to the type of PLC.

► Please check the terminal switch of XGT Panel. Basically it is set up as on.

► It is recommended to use shield connection for stable communication. Please see Chapter 2 for the shield connection method.

29.3 Communication Setting

XGT Panel can be connected through various devices which support MODBUS(RTU) communication with RS-232C and RS-422/485 method.
Since the configuration method is different by manufacturers, please see the users' manual for each device for details
Here we explain it with XGK PLC of LS Industrial Systems as an example.

29.3.1 Example of PLC(XGK) configuration

The communication parameter of PLC(XGK) is configured from XG-PD.

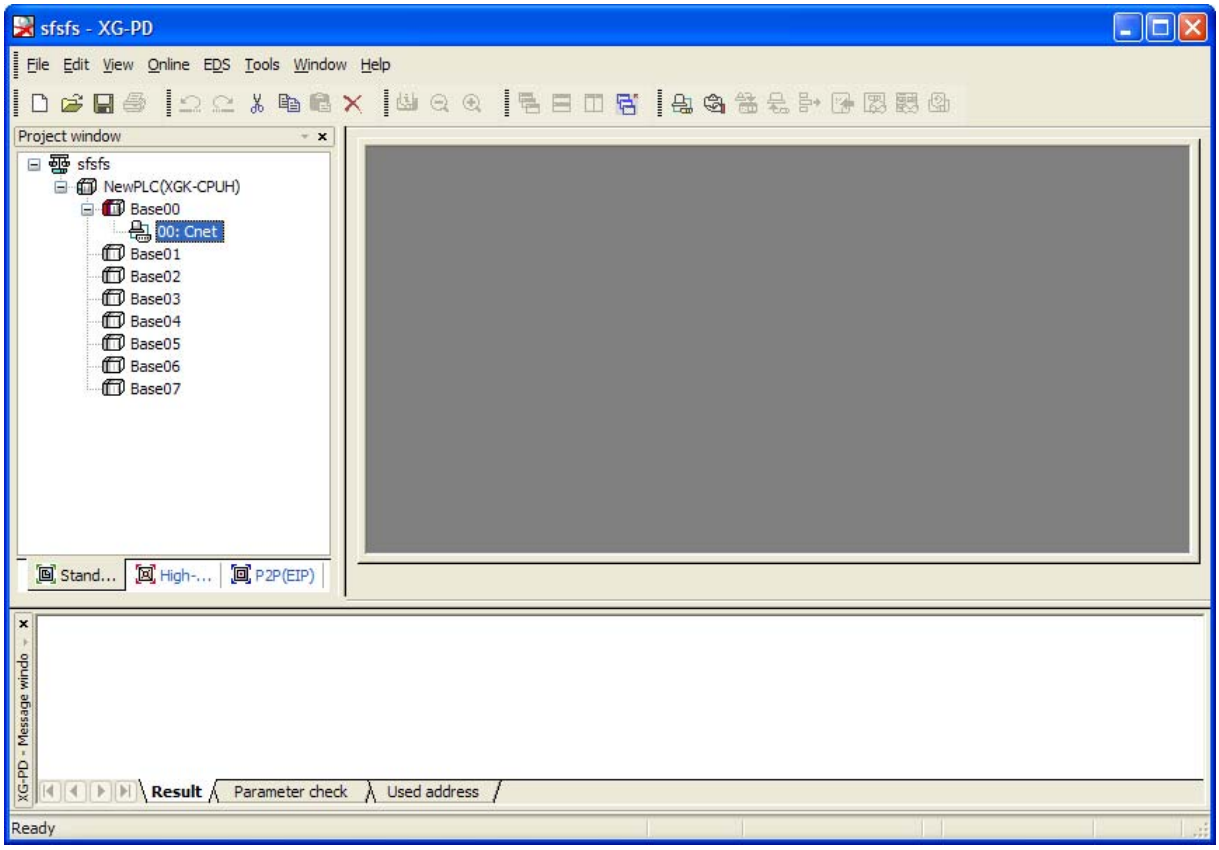

(1) Configuration of connection
Select online -> configure connection.
Configure connection options fit to user's environment and click connection.
(2) Read I/O information
Select online->Read I/O information to read module information installed on current base.

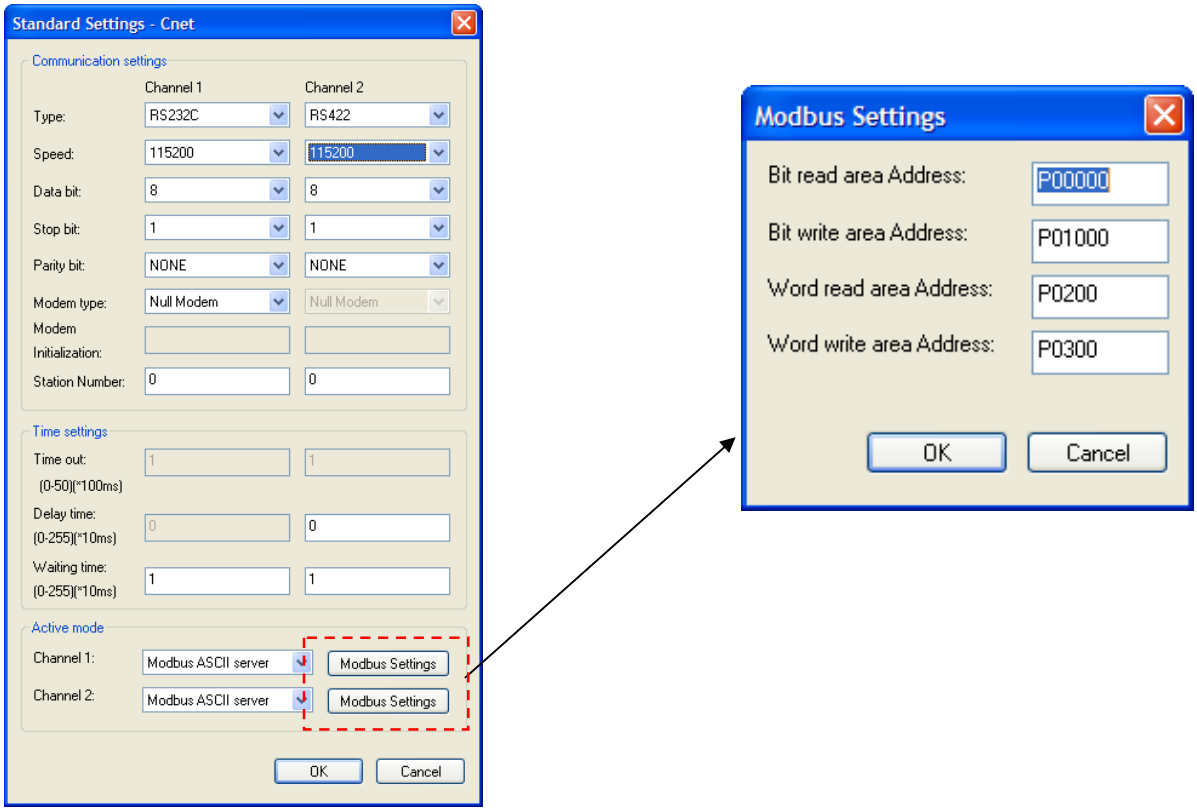

(3) Double click relevant Cnet I/F module to run default configuration window, and configure communication type and speed, modem type, data bit, stop bit and station number from the connection configuration menu.

(4) Select ASCII server for active mode.

(a) If Modbus ASCII server is selected as active mode, the Modbus Settings will be activated.

(5) Modbus Settings

(a) Bit read area address: This refers to the starting address of bit read area. It is composed of 5 digits. At this time, the front four digits refer to word value, and the last digit refers to bit value.

Ex) In case of P00000: It means that 0th word and 0th bit of P devices area is configured as starting address of bit read area.

(b) Bit write area address: This refers to the starting address of the bit write area. It is composed of 5 digits. At this time, the front four digits refer to word value, and the last digit refers to bit value.

Ex) In case of P00100: It means that 10th word and 0th bit of P devices area is configured as starting address of bit write area.

(c) Word read area address: This refers to the starting address of word read area. It is composed of 4 digits.

Ex) In case of P00200: It means that 200th word is configured as starting address of word read area.

(d)Word write area address: This refers to the starting address of word write area. It is composed of 4 digits.

Ex) In case of P00300: It means that 300th word is configured as starting address of word write area.

(6) Write Parameter

(a) Click Online -> Write Parameter.

(b) Click the module which finishes configuration and click Confirm.

(c) After clicking Confirm button, reset the module individually after finishing writing a parameter.

(7) Check out motion

(a) Click Online -> System Diagnosis.

(b) Click the module, and click right mouse button and click frame monitoring or status by services to check out whether it is in normal communication.

29.3.2 Example configuration of XGT Panel

The communication configuration of XGT Panel is configured by using XP-Builder.

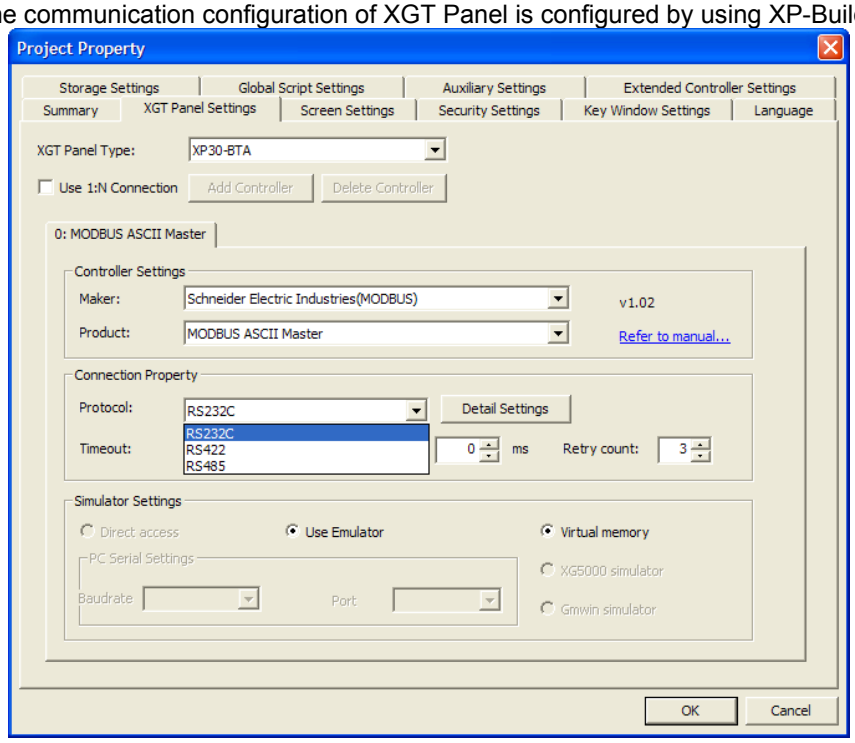

(1) Configuration of controller

Select MODBUS ASCII Master manufactured by Schneider Electric Industry.

(2) Connection properties

Select the connection method most suitable for user's environment.

(3) Configuration of detailed connection options

Select baud rate, data bit, parity, stop bit compatible with the user's environment.

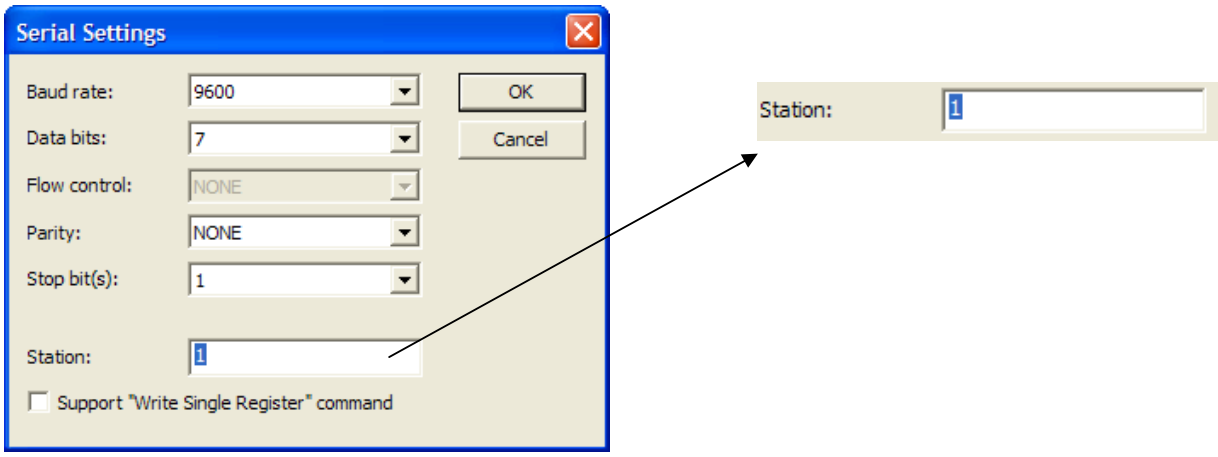

The station address is destination station address in Modbus communication. If the station address is wrong, there is 'timeout' displayed on the upper part of XGT Panel screen. Please check out the station address.
If there is no place where you can set station address in PLC or PLC communication module, set the station address as '0' in the XP-Builder.

(4) Download the finished communication configuration to the XGT Panel.

Tips

(1) Cautions

► If communication has a problem, then please check whether parameters including baud rate, data bit are matched.
► If 'timeout' appears on the upper part of the screen, then check out the station address.

29.4 Available devices

Devices available for XGT Panel are as follows.

devices	Area available for connection			Remarks
	Available range	Read (Function code)	Write(Function code)	
Output contact point	0 - 65535	Available(01)	Available(05)	N
Input contact point	0 - 65535	Available(02)	Available(05)	
Output register	0 - 65535	Available(03)	Available(06,16)	
Input register	0 - 65535	Available(04)	Available(06,16)	

Tips

(1) Cautions

► Please see users' manual of Modbus protocol produced by Schneider for more details about the devices.
► Be sure not to be out of the devices area range.
►Since the maximum value of devices varies according to PLC, be sure to check out users' manual for the PLC to be connected.

Chapter 30 Modbus ASCII slave

Modbus ASCII driver is provided from V1.20. Users using previous version of the V1.20 should use V1.20 or higher XP-Builder and XGT Panel device software from homepage.
Please see 'Chapter 12 Mode bus ASCII protocol (Master)' for the overview and connection of protocol.

30.1 Communication Setting

XGT Panel can be connected through various devices supporting MODBUS(ASCII) communication and by RS-232C and RS-422/485 methods. Since the configuration method is different by manufacturers, please see the users' manual of the device for details. Here we present the example of XGK PLC from LS Industrial Systems.

30.1.1 Example of PLC(XGK) configuration

The communication parameter of PLC(XGK) is configured from XG-PD.

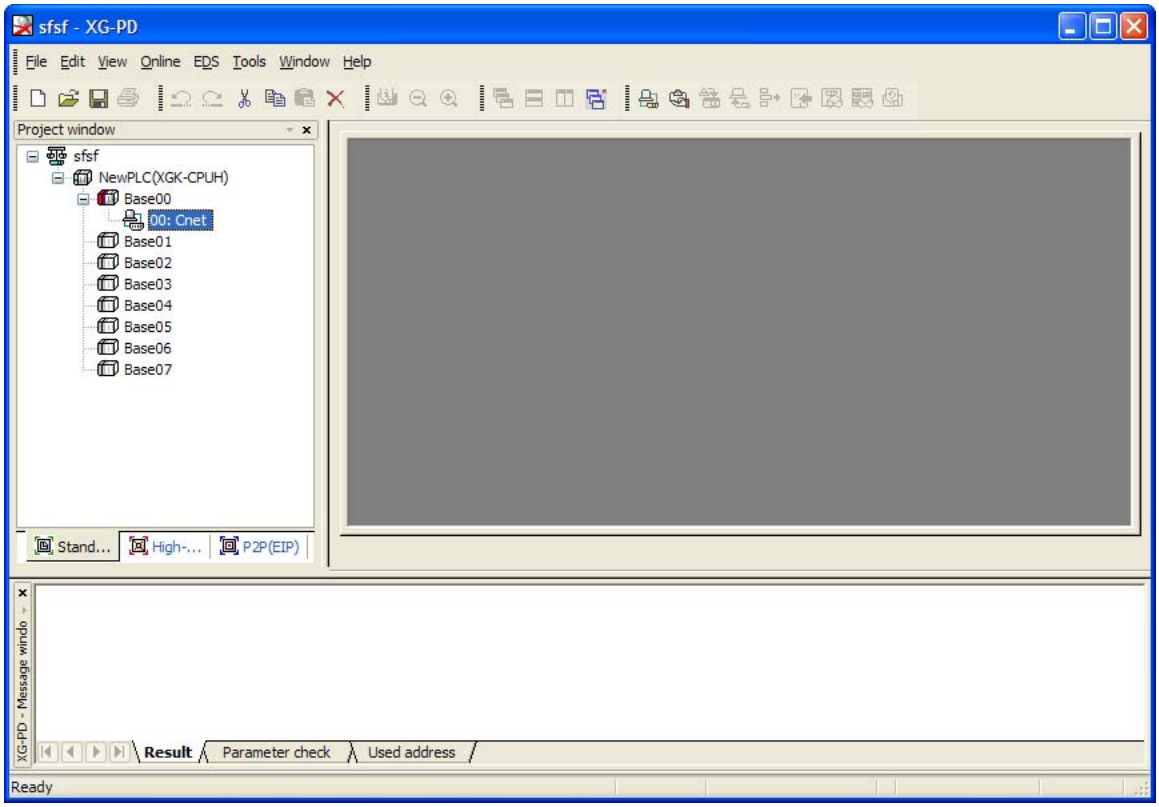

(1) Connect configuration
Select online -> connect configuration.
Configure the connection option suitable for user's environment, and click the connection.
(2) Read I/O information
Select online->read I/O information to read the information of module installed on the base.

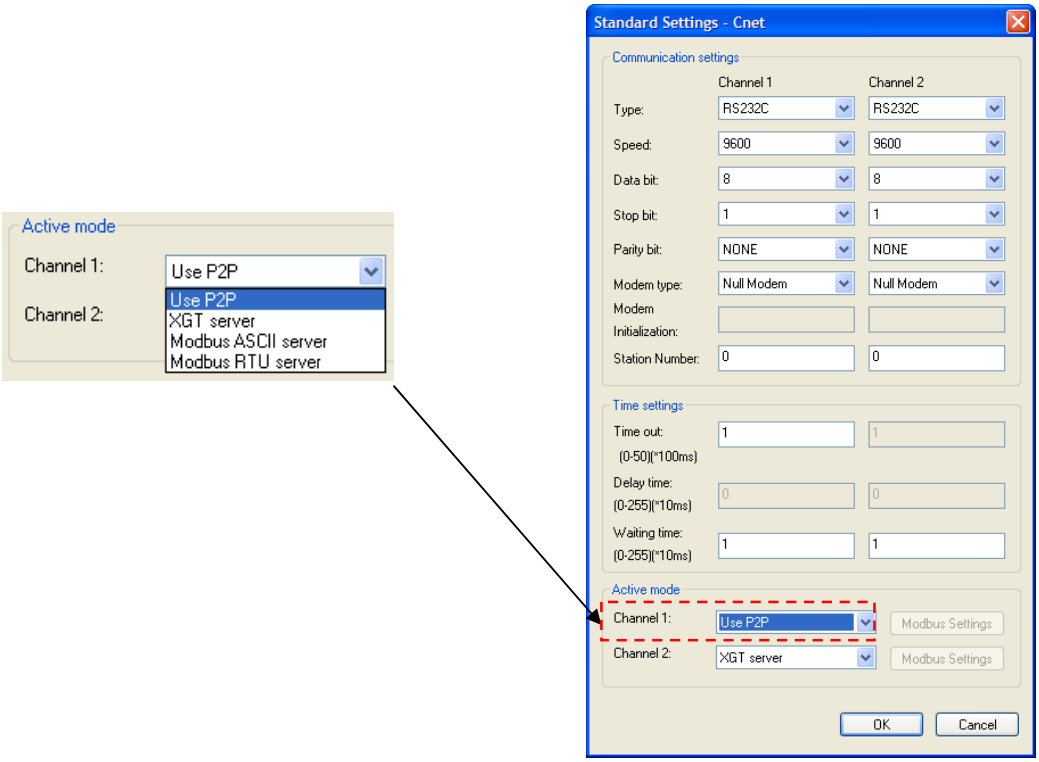

(3) Double-click current C`net I/F module to execute basic configuration window and configure the communication type, communication speed, modem type, data bit, stop bit and number.

(4) Select 'Use P2P' for Active mode.

(5) P2P configuration

(a) Select 'P2P' tap from the project window.

(b) Select communication module type, base and slot to configure P2P parameter as shown below.

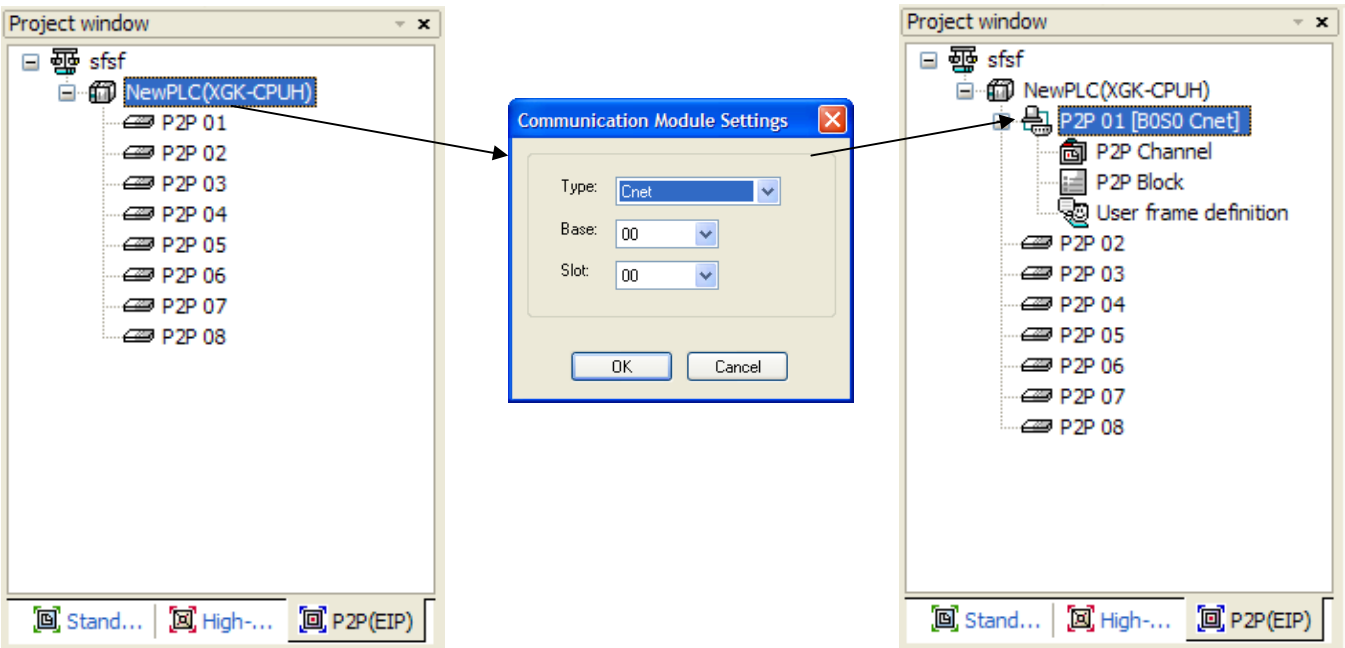

(c) Select P2P channel and configure P2P driver to 'Modbus ASCII client'

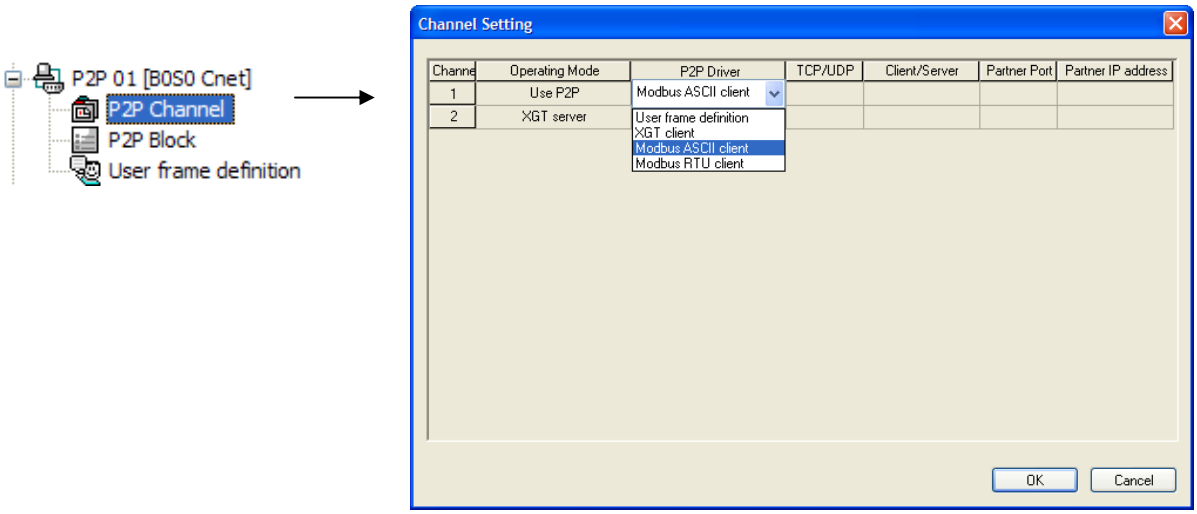

(d) Select P2P block and configure channel, function, conditional flag, command type, data type, data size, destination station number as shown below. Please see users' manual for 'XGT series Cnet I/F module' for the detailed configuration of this part.

Index	Ch.	Driver Setting	P2P function	Conditional flag	Command type	Data type	No. of variables	Data size	Destination station	Destination station number	Frame	Setting	Variable setting contents
0	1	Modbus ASCII client	READ	F00093	Single	BIT	1		☑	1		Setting	Number :1 READ1:0x10000,SAVE1:M00000
1	1	Modbus ASCII client	WRITE	F00093	Single	BIT	1		☑	1		Setting	Number :1 READ1:M00100,SAVE1:0x00000
2	1	Modbus ASCII client	READ	F00093	Continuous	WORD	1	20	☑	1		Setting	Number :1 READ1:0x30000,SAVE1:D00000
3	1	Modbus ASCII client	WRITE	F00093	Continuous	WORD	1	20	☑	1		Setting	Number :1 READ1:D00100,SAVE1:0x40000

30.1.2 XGT Panel configuration

The communication of XGT Panel is configured by using the XP-Builder.

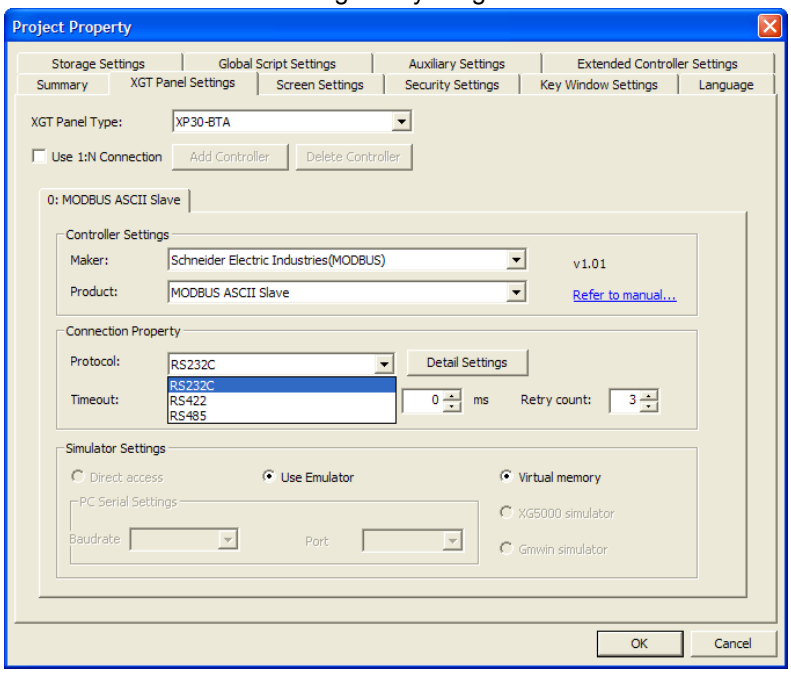

(1) Controller configuration

Select the manufacturer as Schneider Electric Industries, and select the product as MODBUS ASCII Slave.

(2) Connection attributes

Select a connection method suitable for a user's environment.

(3) Configuration of the detailed connection option

Select transmission speed, data bit, parity and stop bit suitable to a user's environment.

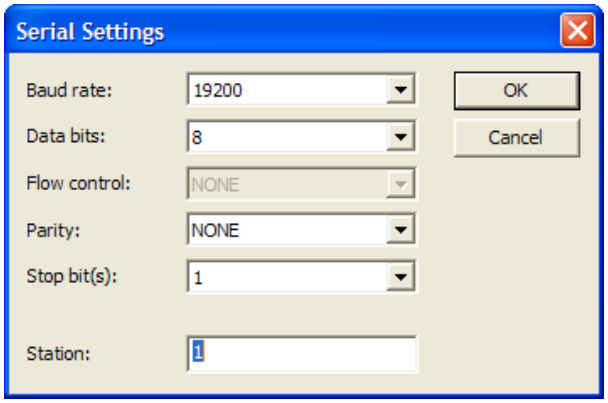

The station address means the destination device's station address in the modbus communication.
If wrong station address is configured for the other's device in the communication, the XGT panel does not answer correctly. Moreover, if XGT Panel is configured as a slave, it does not display communication error message even when the communication is disconnected or unstable.
If there is no place where station address can be configured in PLC or PLC communication module, configure the station address as '0' in the XP-Builder.

(4) Download the communication configuration onto the XGT Panel.

Tip

(1) Cautions

► Please check whether the parameters including transmission speed, data bit are matched during communication error.

30.2 Available Devices

The devices available for XGT Panel are as follows.

30.2.1 Device area

I/O type device	Data type	Read/Write type	Area	Remarks
Output contact point	Bit	Read/Write	HW0.0 ~ HW15359.F	
Input contact point	Bit	Read only	HS0.0 ~ HS15359.F	
Input register	Word	Read only	HS0 ~ HS15359	
Output register	Word	Read/Write	HW0 ~ HW15359	

Tip

(1) Cautions

► The HW area of XGT panel used as bit/word device is same area.

► HS device is a read only device. You cannot write any value.

► Since the device is fixed, that cannot be changed.

30.2.2 HS devices

(1) Bit device

Device address	attribute	Function	Description
HS0000.0	Read	Always On	Always maintains 1
HS0000.1	Read	Always Off	Always maintains 0
HS0000.2	Read	Caps Lock status	0: lowercase letter 1: Capital letter
HS0000.3 ~ 5	Prohibited	-	-
HS0000.6	Read	200ms cycle On/Off timer	Repeat 200ms ‘0’ → 200ms ‘1’ → 200ms ‘0’
HS0000.7	Read	1 sec. cycle On/Off timer	Repeat 1 sec. ‘0’ → 1 sec. ‘1’ → 1 sec. ‘0’
HS0000.8	Read	2 sec. cycle On/Off timer	Repeat 2 sec. ‘0’ → 2 sec. ‘1’ → 2 sec. ‘0’
HS0000.9	Read	5 sec. cycle On/Off timer	Repeat 5 sec. ‘0’ → 5 sec. ‘1’ → 5 sec. ‘0’
HS0000.A	Read	10 sec. cycle On/Off timer	Repeat 10 sec. ‘0’ → 10 sec. ‘1’ → 10 sec. ‘0’
HS0000.B	Read	30 sec. cycle On/Off timer	Repeat 30 sec. ‘0’ → 30 sec. ‘1’ → 30 sec. ‘0’
HS0000.C	Read	60 sec. cycle On/Off timer	Repeat 60 sec. ‘0’ → 60 sec. ‘1’ → 60 sec. ‘0’
HS0000.D ~ F	Prohibited	-	-

(2) Word device

Device address	attribute	Function	Description
HS0001	Read	XGT Panel S/W version info. (upper)	In case of V1.04, '1' is displayed
HS0002	Read	XGT Panel S/W version info.(lower)	In case of V1.04, '4' is displayed
HS0003	Prohibited	-	-
HS0004	Read	Date information(Year)	Year 2007 is displayed as '2007'
HS0005	Read	Date information(Month)	December is displayed as '12' (value between 1~12)
HS0006	Read	Date information(Date)	4th day is displayed as '4'(value between 1~31)
HS0007	Read	Hour information(hr.)	11AM is displayed as '11'(value between 0~23)
HS0008	Read	Hour information(min.)	25 min. is displayed as '25'(value between 0~59)
HS0009	Read	Hour information(sec.)	55 sec. is displayed as '55'(value between 0~59)
HS0010	Read	Current base screen number	Base screen number configured in the XP-Builder (Value between 1~4095) 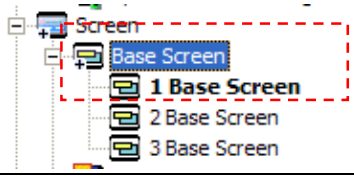
HS0011	Read	Current global window 1 screen number	**Screen number configured as global window 1 (value between 0~4090)** 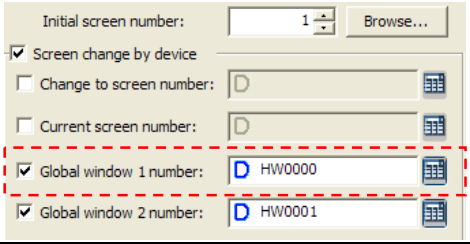
HS0012	Read	Current overall window 2 screen number	**Screen number configured as global window 2 (value between 0~4090)** 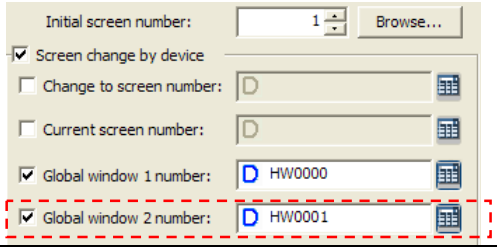
HS0013	Read	Current security level	Currently operated security level(value between 0~9)
HS0014	Read	Always '0'	Always display 0
HS0015	Read	500ms counter	Increased by one every 500ms(Value between 0~65535)
HS0016	Read	1 sec. counter	Increased by one every 1 sec.(Value between 0~65535)
HS0017	Read	2 sec. counter	Increased by one every 2 sec. (Value between 0~65535)
HS0018	Read	5 sec. counter	Increased by one every 5 sec.(Value between 0~65535)
HS0019	Read	10 sec. counter	Increased by one every 10 sec. (Value between 0~65535)

(3) Devices related to communication

Device address	attribute	Function	Description
HS800	Read	The number of transmission connected to ‘0’ (32 bits)	Number of data transmission with control device connected to number ‘0’
HS802	Read	The number of receiving connected to ‘0’ (32 bits)	Number of data receiving with control device connected to number ‘0’
HS804	Read	The number of error connect to ‘0’ (32 bits)	Number of data error with control device connected to number ‘0’
HS820	Read	The number of transmission connected to ‘1’ (32 bits)	Number of data transmission with control device connected to number ‘1’
HS822	Read	The number of receiving connected to ‘1’ (32 bits)	Number of data receiving with control device connected to number ‘1’
HS824	Read	The number of error connected to ‘1’ (32 bits)	Number of data error with control device connected to number ‘1’
HS840	Read	The number of transmission connected to ‘2’ (32 bits)	Number of data transmission with control device connected to number ‘2’
HS842	Read	The number of receiving connected to ‘2’ (32 bits)	Number of data receiving with control device connected to number ‘2’
HS844	Read	The number of error connected to ‘2’ (32 bits)	Number of data error with control device connected to number ‘2’
HS860	Read	The number of transmission connected to ‘3’ (32 bits)	Number of data transmission with control device connected to number ‘3’
HS862	Read	The number of receiving connected to ‘3’ (32 bits)	Number of data receiving with control device connected to number ‘3’
HS864	Read	The number of error connected to ‘3’ (32 bits)	Number of data error with control device connected to number ‘3’
HS0910	Read	Communication scan time connected to ‘0’	Communication scan time connected to ‘0’
HS0911	Read	Communication scan time connected to ‘1’	Communication scan time connected to ‘1’
HS0912	Read	Communication scan time connected to ‘2’	Communication scan time connected to ‘2’
HS0913	Read	Communication scan time connected to ‘3’	Communication scan time connected to ‘3’
HS0970.0	Bit read	Communication timeout connected to ‘0’	If communication time out occurs at ‘0,' then ‘1’
HS0970.1	Bit read	Communication NAK signal connected to ‘0’	If NAK signal occurs from control device connected to ‘0,’ then ‘1’
HS0971	Read	The number of timeout connected to ‘0’	Number of timeout that occurs from ‘0’
HS0972	Read	The number of maximum retry connected to ‘0’	The maximum number of retry that consecutively occurs from ‘0.’
HS0973	Read	The number of retry connected to ‘0’	Number of retry that occurs from ‘0’
HS0974	Read	The number of the maximum timeout connected to ‘0’	The maximum number of timeout that consecutively occurs from ‘0.’
HS0975.0	Bit read	The number of communication timeout connected to No. ‘1’	If communication time that out occurs from ‘1,' then ‘1’

HS0975.1	Bit read	Communication NAK signal connected to ‘1’	If NAK signal occurs that from control device connected to ‘1,’ then ‘1’
HS0976	Read	The number of timeout connected to ‘1’	Number of timeout that occurs from ‘1’
HS0977	Read	The number out of the maximum number of retry is ‘1’	The maximum number of retry that consecutively occurs from ‘1.’
HS0978	Read	The number of retry connected to ‘1’	Number of retry that occurs from ‘1’
HS0979	Read	The number of the maximum timeout connected to ‘1’	The maximum number of timeout that consecutively occurs from ‘1.’
HS0980.0	Bit read	The communication timeout connected to ‘2’	If communication time out that occurs from ‘2,' then ‘1’
HS0980.1	Bit read	The communication NAK signal connected to ‘2’	If NAK signal occurs from control device connected to ‘2,’ then ‘1’
HS0981	Read	The number of timeout connected to ‘2’	Number of timeout that occurs from ‘2’
HS0982	Read	The number of maximum retry connected to ‘2’	The maximum number of retry that consecutively occurs from ‘2.’
HS0983	Read	The number of retry connected to ‘2’	Number of retry that occurs from ‘2’
HS0984	Read	The number of maximum timeout connected to ‘2’	The maximum number of timeout that consecutively occurs from ‘2.’
HS0985.0	Bit read	The communication timeout connected to ‘3’	If communication time out occurs from ‘3,' then ‘1’
HS0985.1	Bit read	The communication NAK signal connected to ‘3’	If NAK signal occurs from control device connected to ‘3,’ then ‘1’
HS0986	Read	The number of timeout connected to ‘3’	Number of timeout that occurs from ‘3’
HS0987	Read	The number of maximum retry connected to ‘3’	The maximum number of retry that consecutively occurs from ‘3.’
HS0988	Read	The number of retry connected to ‘3’	Number of retry that occurs from ‘3’
HS0989	Read	The number of maximum timeout connected to ‘3’	The maximum number of timeout that consecutively occurs from ‘3.’

(4) System alarm device

Device address	attribute	Function	Description
HS0950.0	Read	Warning for low voltage battery	0: Normal 1: Warning
HS0950.1	Read	NVRAM data error	0: Normal 1: Error
HS0950.2~7	Prohibited	-	-
HS0950.8	Read	USB overcurrent warning	0: Normal 1: Warning
HS0950.9~F	Prohibited	-	-
HS0951.0	Read	Logging backup No device	0: Normal 1: No device
HS0951.1	Read	Recipe backup No device	0: Normal 1: No device
HS0951.2	Read	Screen backup No device	0: Normal 1: No device
HS0951.3	Read	Alarm backup No device	0: Normal 1: No device
HS0951.4	Read	Printer disconnected	0: Normal 1: No connection
HS0951.5~F	Prohibited	-	-

Chapter 31 User-defined Protocol

The user-defined protocol driver is provided from V1.22. If you use the version prior to the V1.22, then you should use XP-Builder and XGT Panel device software with V1.22 or higher from the homepage.
Users can make protocol by using scripts for the controller which does not support XGT Panel. Be sure to fully aware of the protocol for the controller, and write scripts.

31.1 Communication Setting

The user-defined protocol can be connected through RS-232C, RS-422/485, TCP/IP and UDP/IP method. Since the configuration methods are different by manufacturers, please see the manual for each device for details.

31.1.1 Configuration of PLC

Follow the configuration method set by each manufacturer for the PLC connection configuration.
Please ask details to the manufacturer.

31.1.2 Configuration of XGT Panel

The communication of XGT Panel is configured by using XP-Builder.

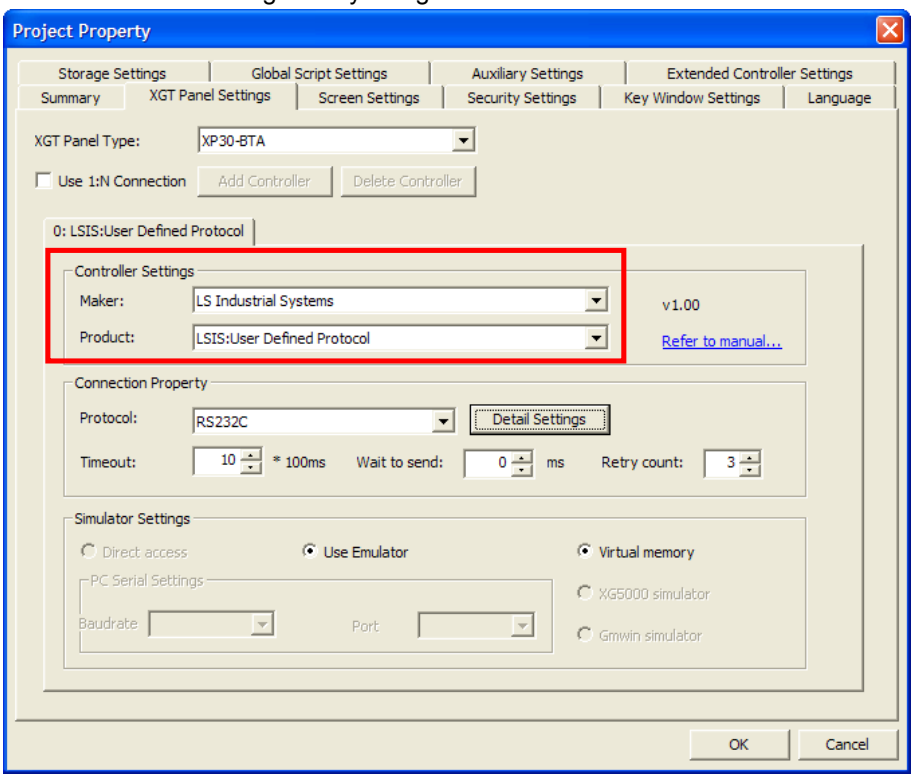

(1) Configuration of the controller
Select the product as user-defined protocol made by LS Industrial Systems.
(2) Connection property
Select the connection method compatible with the user's environment. It supports RS232C, RS422, RS485, Ethernet(TCP/IP, UDP/IP) connection methods.

(3) Configuration of detailed connection

Select transmission speed, data bit, parity and stop bit compatible with the user's environment.

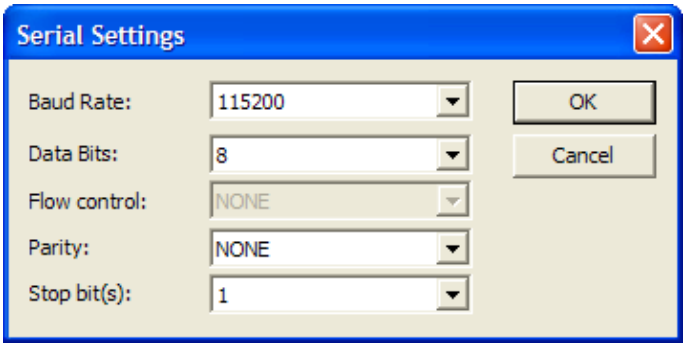

In case of Ethernet connection, designate TCP/IP or UDP/IP, and enter the IP address for the communication.
Enter the destination port number according to the target device.
The local port number '0' is automatically set up.

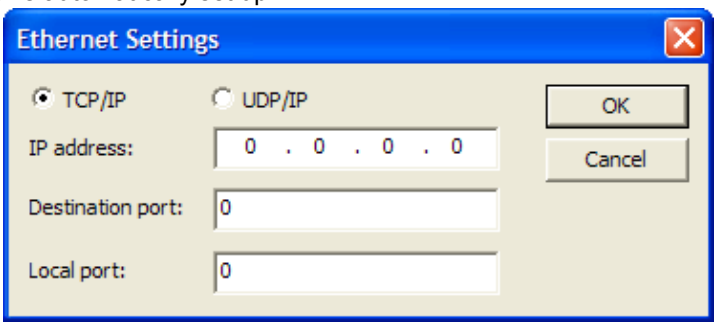

(4) Download the configured communication to the XGT Panel.

Tip

(1) Cautions

- ► When communication has a problem, please check whether parameters like transmission speed, data bit are matched.
- ► When communication has a problem, please check whether parameters like IP address and destination port are matched.
- ► When communication has a problem, please check the cable connection. Check the manual for the communication device for detailed cable connection.

31.2 Available devices

Devices available for XGT Panel are as follows.

31.2.1 Devices area

I/O type devices	Data type	Read/write type	Area	Remarks
output contact point	Bit	Read/write	HW00000.0 ~ HW15359.F	
input contact point	Bit	Read only	HS0000.0 ~ HS1023.F	
input register	Word	Read only	HS0000 ~ HS1023	
output register	Word	Read/write	HW000000 ~ HW15359	
I/O contact point	Bit	Read/write	HX00000 ~ HX063F	
latch register	Bit	Read/write	HK0000.0 ~ HK4095.F	
latch register	Word	Read/write	HK0000 ~ HK4095	

Tip

(1) Cautions

► The HW area of the XGT Panel used as Bit/Word devices is same area.

► HS device is read only device, so you cannot write a value discretionarily.

► Since devices are fixed, you cannot change it by yourself.

31.3 Usage of script

The user-defined communication can use script to communicate. In case the controller supports simple structured protocol, it can be easily applied.

31.3.1 Script function – Communication script function

The functions available for communication among script functions are as follows.

Category	Function name	Description
Communication function	ADD_SUM	Calculate sum of the entered data and return them
	ADD_SUM_1S	Calculate sum of the entered data and take 1's complement and return them
	ADD_SUM_2S	Calculate sum of the entered data and take 2's complement and return them
	CRC16	Calculate and return the 16 bit CRC value of entered data
	XOR_SUM	Calculate and return the sum of XOR of entered data
	ReadFromIO	Read data from I/O of the designated controller.
	WriteToIO	Transmit data to I/O of the designated controller.

(1) ADD_SUM

Calculate and return the sum of entered data.

	Description
Function	ADD_SUM(char* pBuffer, int nCount, int* nResult)
Returned value	BOOL: If the number is out of the range of buffer, then return FALSE.
Parameter1	char* pBuffer: Buffer to calculate
Parameter2	int nCount: Number of bytes to be calculated
Parameter3	int* nResult: Calculated value
Example	

```
1
2  char buffer[5] = { 1, 2, 3, 4, 5 }, result=0;
3
4  // result is 0x0F
5  ADD_SUM ( &buffer[0], 5, &result );
6
```

(2) ADD_SUM_1S

Calculate the sum of entered data, and take one's complement and then return it

	Description
Function	ADD_SUM_1S(char* pBuffer, int nCount, int* nResult)
Returned value	BOOL: If the number is out of the range of buffer, then return FALSE.

	Description
Parameter1	char* pBuffer: Buffer to calculate
Parameter2	int nCount: Number of bytes to be calculated
Parameter3	int* nResult: Calculated value

Example	`char buffer[5] = { 1, 2, 3, 4, 5 }, result=0;`
	`// result is 0xF0 = 0xFF - 0x0F`
	`ADD_SUM_1S ( &buffer[0], 5, &result );`

(3) ADD_SUM_2S

Calculate the sum of entered data, and take 2's complement and then return it

	Description
Function	ADD_SUM_2S(char* pBuffer, int nCount, int* nResult)
Returned value	BOOL: If the number is out of the range of buffer, then return FALSE.
Parameter1	char* pBuffer: Buffer to be calculated
Parameter2	int nCount: Number of bytes to be calculated
Parameter3	int* nResult: Calculated value

Example	`char buffer[5] = { 1, 2, 3, 4, 5 }, result=0;`
	`// result is 0xF1 = (0xFF - 0x0F) + 1`
	`ADD_SUM_2S ( &buffer[0], 5, &result );`

(4) CRC16

Calculate and return the CRC16 of the entered data.

	Description
Function	CRC16(char* pBuffer, int nCount)
Returned value	BOOL: If the number is out of the range of buffer, then return FALSE.
Parameter1	char* pBuffer: Buffer to calculate
Parameter2	int nCount: Number of bytes to be calculated
Parameter3	int* nResult: Calculated value

Example	`char buffer[5] = { 1, 2, 3, 4, 5 };`
	`short result=0;`
	`// result is 0xbb2a`
	`CRC16 ( &buffer[0], 5, &result );`

(5) XOR_SUM

Calculate and return the sum of XOR of entered data.

	Description
Function	XOR_SUM(char* pBuffer, int nCount, int* nResult)
Returned value	BOOL: If the number is out of the range of buffer, then return FALSE.
Parameter1	char* pBuffer: Buffer to calculate
Parameter2	int nCount: Number of bytes to be calculated
Parameter3	int* nResult: Calculated value
Example	

```
1
2  char buffer[5] = { 1, 2, 3, 4, 5 }, result=0;
3
4    // result is 0x01
5    XOR_SUM ( &buffer[0], 5, &result );
6
```

(6) WriteToIO

	Description
Function	WriteToIO(int nCtlr, char* pBuffer, int nSize)
Returned value	int: Number of bytes of data transmitted
Parameter1	int nCtlr: Controller number(0~3)
Parameter2	char* pBuffer: Data buffer to be transmitted
Parameter3	Int nSize: Size of buffer
Example	

```
1
2   char Command[32], Response[32];
3   short Address=0x0010, Checksum=0;
4   int SentSize=0, ReadSize=0;
5
6   // initialize command[0] ~ command[31] to 0
7   Memset ( &Command[0], 0, 32 );
8   // initialize response[0] ~ response[31] to 0
9   Memset ( &Response[0], 0, 32 );
10
11  Command[0] = 0x01;                  // station number
12  Command[1] = 0x05;                  // function code: write single coil
13
14  Command[2] = HIBYTE ( Address );          // address 0x0010
15  Command[3] = LOBYTE  ( Address );
16
17  Command[4] = 0xFF;                          // force on
18  Command[5] = 0;
19
20  CRC16 ( &Command[0], 6, &Checksum );      // calculate CRC
21  Command[6] =  LOBYTE ( Checksum );        // checksum
22  Command[7] = HIBYTE ( Checksum );
23
24  SentSize = WriteToIO ( 0, &Command[0], 8 ); // send to IO
25
```

(7) ReadFromIO

	Description
Function	ReadFromIO(int nCtlr, char* pBuffer, int nSize, int nToRead)
Returned value	int: Number of bytes of data read
Parameter1	int nCtlr: Controller number(0~3)
Parameter2	char* pBuffer: Buffer where read data is saved
Parameter3	Int nSize: Size of buffer
Parameter4	Int nToRead: Data size to be read
Example	

```
1
2   char Command[32], Response[32];
3   short Address=0, Checksum=0, ReadData=0;
4   int SentSize=0, ReadSize=0, ReadOffset=0, DeviceOffset;
5
6   // initialize command[0] ~ command[31] to 0
7   Memset ( &Command[0], 0, 32 );
8   // initialize response[0] ~ response[31] to 0
9   Memset ( &Response[0], 0, 32 );
10
11  // read from IO
12  ReadSize = ReadFromIO ( 0, &Response[0], 8 );
13
```

Cautions

► ReadFromIO function and WriteToIO function are only operated only when the controller is "LSIS: User Defined Protocol" driver. It does not operate in case of another driver.

Tip

(1) Please see manual of XP-Builder [18.4 Script] for more details about how to use script.

31.3.2 Transmit data when switch is pushed

When switch is pushed, the written script is operated to transmit data.
The switch to operate script is word switch and multiple switch.

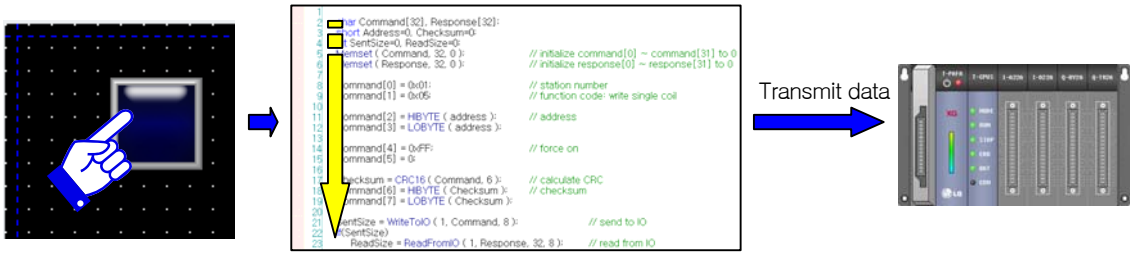

[Concept map]

(1) Add script

Add script to the project window.

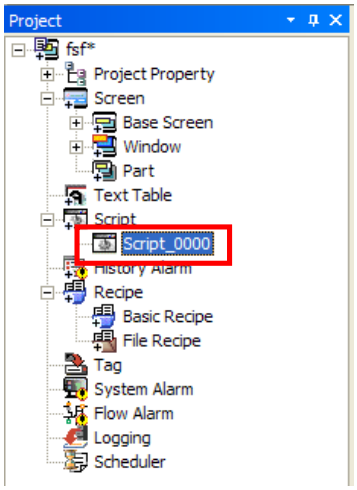

(2) Edit script contents

Write communication protocol in script.

When writing the script, consider which action is taken when this script is operated.

Following example shows when Write Single Coil command of RTU master communication is used.

When switch is pushed, the bit device is set at address 0x0010 by the modbus controller with number 1 station address.

```
1
2   char Command[32], Response[32];
3   short Address=0x0010, Checksum=0;
4   int SentSize=0, ReadSize=0;
5
6   // initialize command[0] ~ command[31] to 0
7   Memset ( &Command[0], 0, 32 );
8   // initialize response[0] ~ response[31] to 0
9   Memset ( &Response[0], 0, 32 );
10
11  Command[0] = 0x01;                  // station number
12  Command[1] = 0x05;                  // function code: write single coil
13
14  Command[2] = HIBYTE ( Address );          // address 0x0010
15  Command[3] = LOBYTE  ( Address );
16
17  Command[4] = 0xFF;                          // force on
18  Command[5] = 0;
19
20  CRC16 ( &Command[0], 6, &Checksum );      // calculate CRC
21  Command[6] =  LOBYTE ( Checksum );        // checksum
22  Command[7] = HIBYTE ( Checksum );
23
24  SentSize = WriteToIO ( 0, &Command[0], 8 ); // send to IO
25
26  if(SentSize)
27      ReadSize = ReadFromIO ( 0, &Response[0], 32 );     // read from IO
28
```

(3) Connect script from switch

Configure as follows in order to operate the script when switch is pushed.

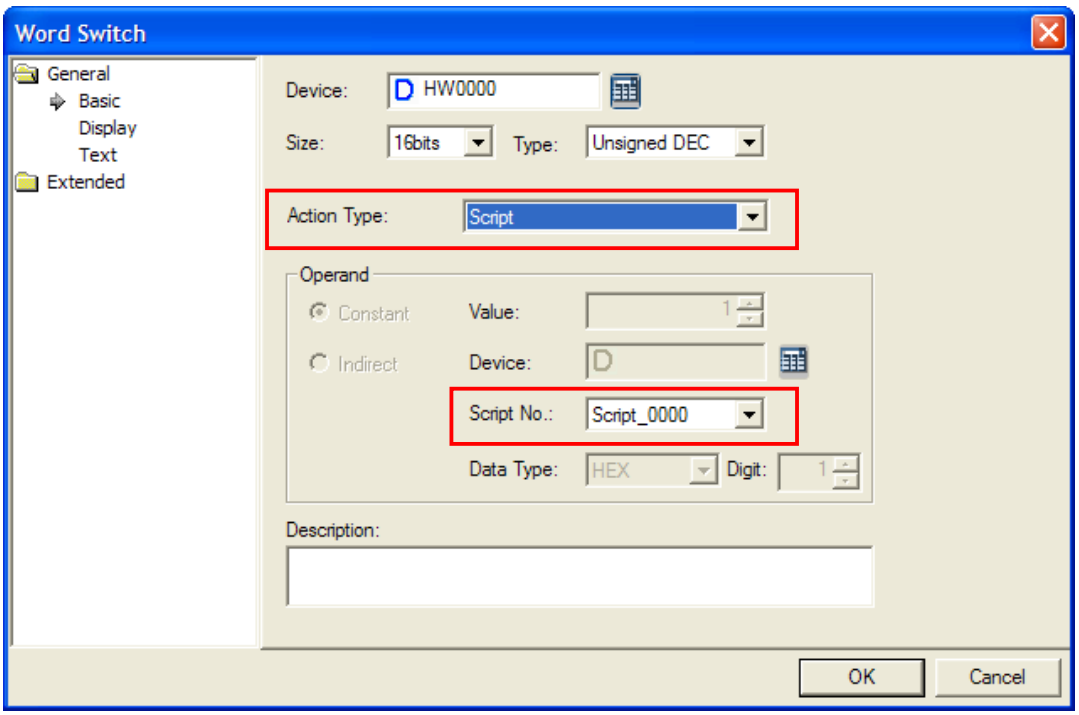

[In case of word switch]

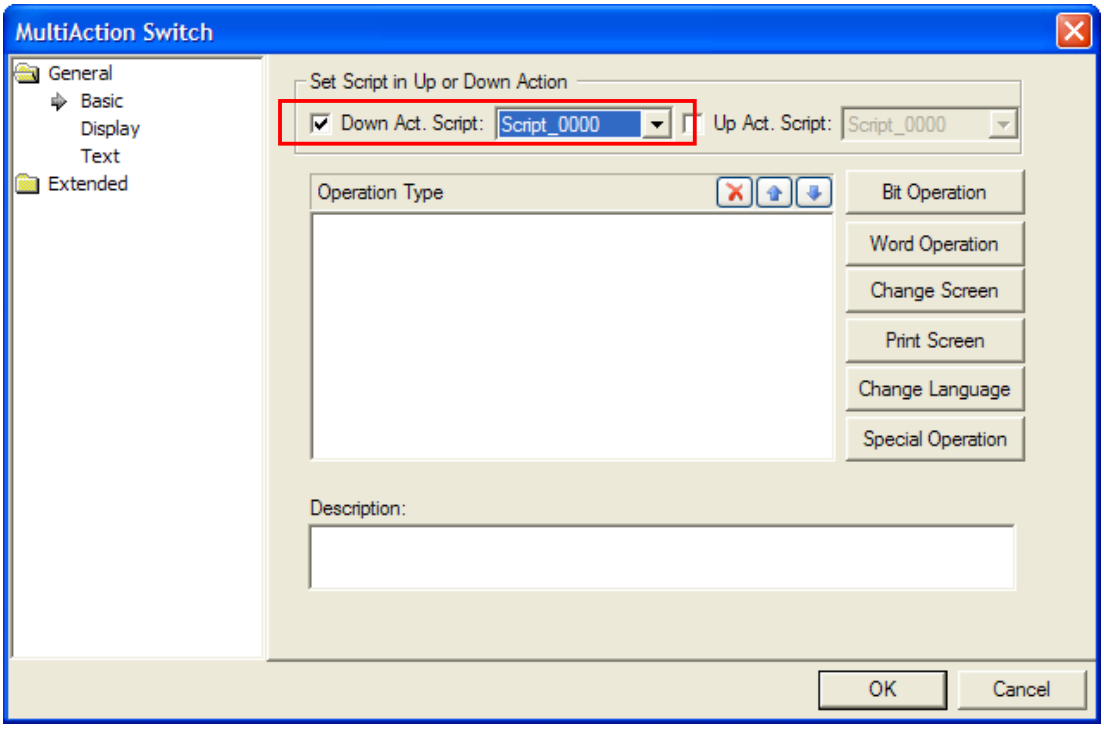

[In case of multiple switch]

31.3.3 Regular monitoring for devices

After the default screen is converted, use the screen script in order to monitor the devices of target controller continuously.

(1) Add script

Add script to the project window.

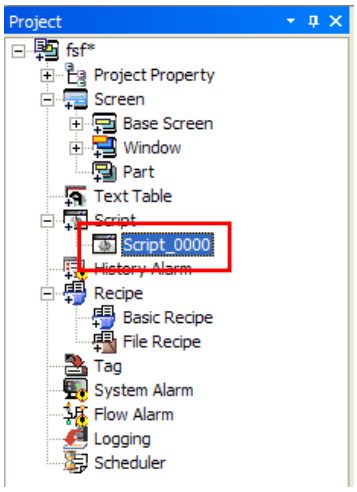

(2) Edit script contents

Write communication protocol in the script.

When writing the script, consider which action is taken when this script is operated.

Following example shows when Read Holding Register command of RTU master communication is used.

After the screen is converted, data of three holding registers are read from the address 0x0010 with the modbus controller with number 1 station address, and saved at internal memory address HW100 ~ HW102.

```
1
2   char Command[32], Response[32];
3   short Address=0x0010, Checksum=0, DeviceCount=3;
4   int SentSize=0, ReadSize=0, i=0, Value=0;
5
6   // initialize command[0] ~ command[31] to 0
7   Memset ( &Command[0], 0, 32 );
8   // initialize response[0] ~ response[31] to 0
9   Memset ( &Response[0], 0, 32 );
10
11  Command[0] = 0x01;                  // station number
12  Command[1] = 0x03;                  // function code: Read Holding Register
13
14  Command[2] = HIBYTE ( Address );          // address 0x0010
15  Command[3] =  LOBYTE ( Address );
16
17  Command[4] =  HIBYTE ( DeviceCount );   // Quantity of Registers
18  Command[5] =  LOBYTE ( DeviceCount );
19
20  CRC16 ( &Command[0], 6, &Checksum );  // calculate CRC
21  Command[6] = LOBYTE ( Checksum );     // checksum
22  Command[7] =  HIBYTE ( Checksum );
23
24  SentSize = WriteToIO ( 0, &Command[0], 8 );  // send to IO
25
26  if(SentSize)                                  // WriteToIO function success
27  {
28      Sleep(50);                                          // wait for response
29      ReadSize = ReadFromIO ( 0, &Response[0], 32 );      // read from IO
30
31      if(ReadSize)                              // ReadFromIO function success
32      {
33          for(i=0; i<DeviceCount; i++)          // assign value to HW100 ~ HW102
34          {
35              // get value
36              Value = MAKEWORD ( Response[3 + i*2], Response[4 + i*2] );
37              SetData ( @[W:HW100], i, Value );   // set value
38          }
39      }
40  }
41
```

(3) Connect script to default screen

Configure as follows in order to connect to script to be operated when screen is converted into default screen.

Select the default screen from the project window, and run the menu by clicking right mouse button and select [Property] menu.

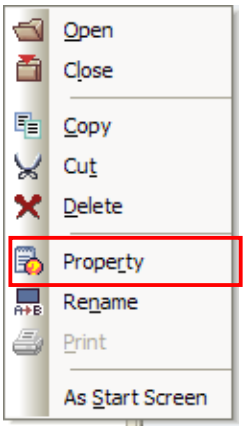

Move to [Others] tab from the screen registration information dialogue box, and click [Add and Change] button.

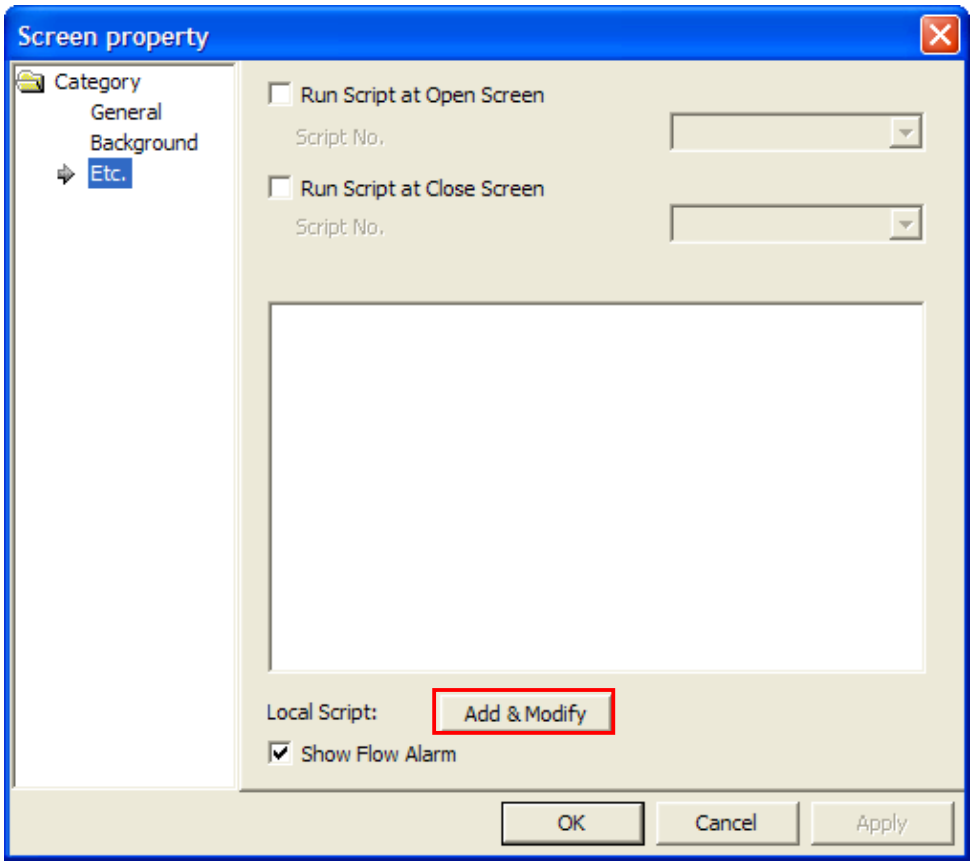

Select script name and designate the condition as [Periodic] by one second, and add it to the list by clicking [Add&Modify] button.
After the screen is changed, the script is implemented at one second interval.

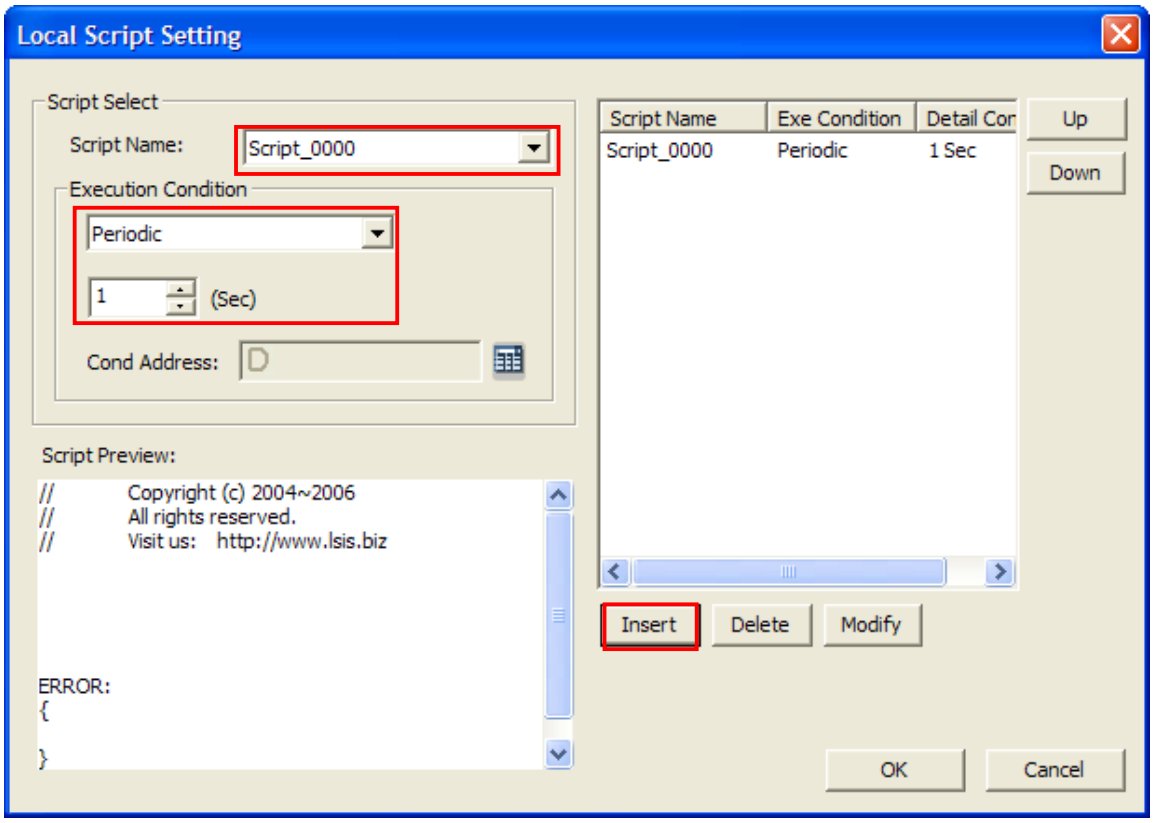

31.3.4 Read data received only from the controller

When copying into internal memory or processing data received from the controller, use global script. You have to use global script only to reduce communication error.

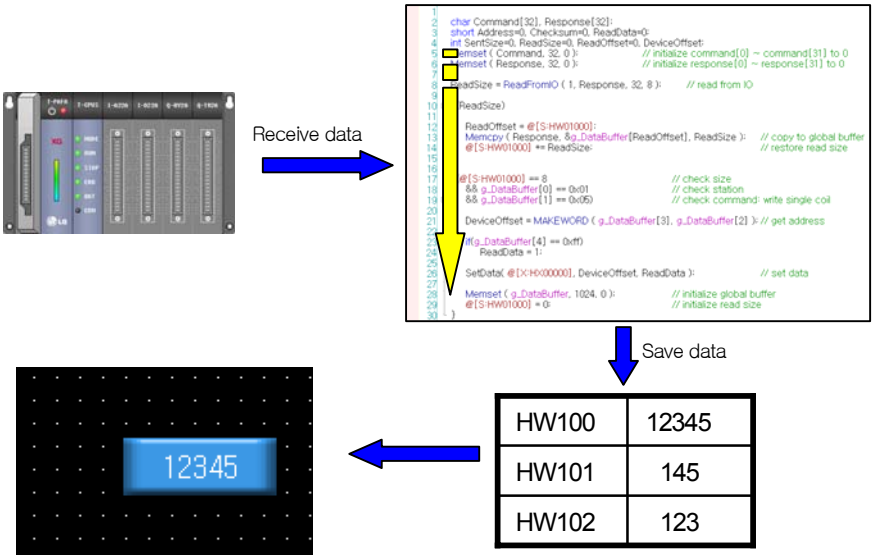

[Concept map]

(1) Add script

Add script to the project window.

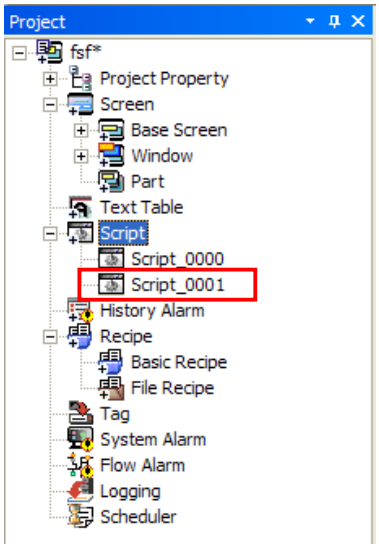

(2) Edit script contents

When writing the script, consider which action is taken when this script is operated.

Following example shows when Write Single Coil command of RTU slave communication is used.

```
1
2   char Command[32], Response[32];
3   short Address=0, Checksum=0, ReadData=0;
4   int SentSize=0, ReadSize=0, ReadOffset=0, DeviceOffset;
5
6   // initialize command[0] ~ command[31] to 0
7   Memset ( &Command[0], 0, 32 );
8   // initialize response[0] ~ response[31] to 0
9   Memset ( &Response[0], 0, 32 );
10
11  // read from IO
12  ReadSize = ReadFromIO ( 0, &Response[0], 8 );
13
14  if(ReadSize)
15  {
16      ReadOffset = @[S:HW01000];
17      // copy to global buffer
18      Memcpy ( &Response[0], &g_DataBuffer[ReadOffset], ReadSize );
19      @[S:HW01000] += ReadSize;                    // restore read size
20  }
21
22  if( @[S:HW01000] == 8                            // check size
23      && g_DataBuffer[0] == 0x01                   // check station
24      && g_DataBuffer[1] == 0x05)                  // check command: write single coil
25  {
26      DeviceOffset = MAKEWORD ( g_DataBuffer[2], g_DataBuffer[3] ); // get address
27
28      if(g_DataBuffer[4] == 0xff)
29          ReadData = 1;
30
31      SetData(@[X:HX00000], DeviceOffset, ReadData );              // set data
32
33      Memset ( &g_DataBuffer[0], 1024, 0 );        // initialize global buffer
34      @[S:HW01000] = 0;                            // initialize read size
35  }
36
```

(3) Connect global script

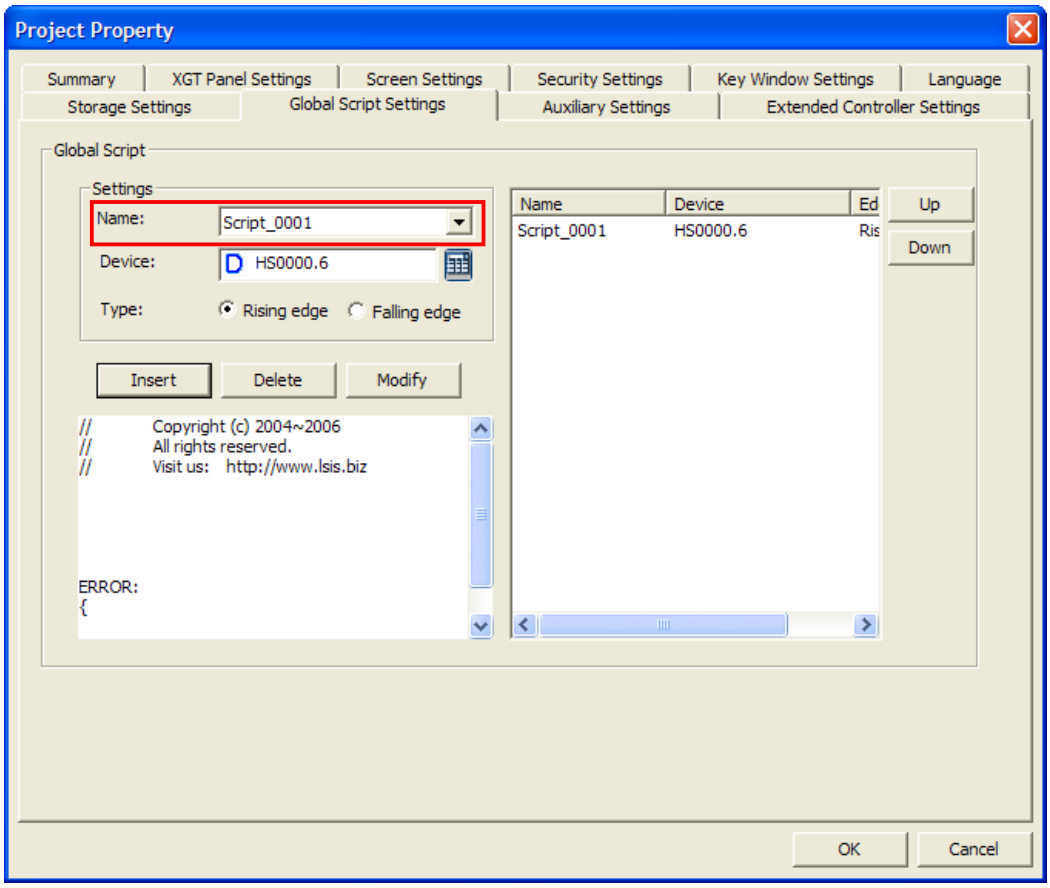

[Configuration of global script]

Caution

► Global script, screen script and switch script can be run at the same time. Therefore, you should add condition for operation when writing script to avoid the situation two scripts are run at the same time.

- Following examples shows how to prevent simultaneous operation of two or more scripts.

```
1
2   // wait 2 seconds for other script is deactivated
3   if( @[X:HX00000] == true)
4   {
5       for( int nLoop=0; nLoop<100; nLoop++ )
6       {
7           Sleep( 20 );
8
9           if( @[X:HX00000] == false )    // no activated script
10              break;
11      }
12  }
13
14  if( @[X:HX00000] == false )            // no activated script
15  {
16      @[X:HX00000] = true;               // this sctript is activated
17
18      .                                  // do something with communication
19      .
20      .
21
22      @[X:HX00000] = false;              // this sctript is deactivated
23  }
24
```

Chapter 32 DELTA DVP series

Delta Electronics' Delta DVP series PLC driver is provided from V1.22. If you use the version prior to V1.22, please use XP-Builder and XGT Panel software with V1.22 or higher from the homepage.

32.1 PLC List

XGT Panel is available for CPU Direct connection with Delta DVP.

PLC name	CPU module	Connection type	Communication type	Connection module	Remarks
DELTA DVP Series	DELTA DVP ES DELTA DVP EX DELTA DVP SS DELTA DVP SA DELTA DVP SX DELTA DVP SH DELTA DVP EH	CPU Direct	RS-232C	CPU	

Tip

(1) Terminology

► CPU Direct: This refers to conducting serial communication through CPU module loader port.

(2) DELTA PLC communication setup is conducted through DELTA PLC loader program.

Protocol is ASCII mode.

(3) Cautions

► Please see users' manual of DELTA DVP for detailed supporting information. Also, supporting items may be changed by DELTA Electronics regardless of this product.

32.2 Wiring Diagram

32.2.1 RS-232C communication method

Wiring of 1:1 RS-232 communication method is as follows.

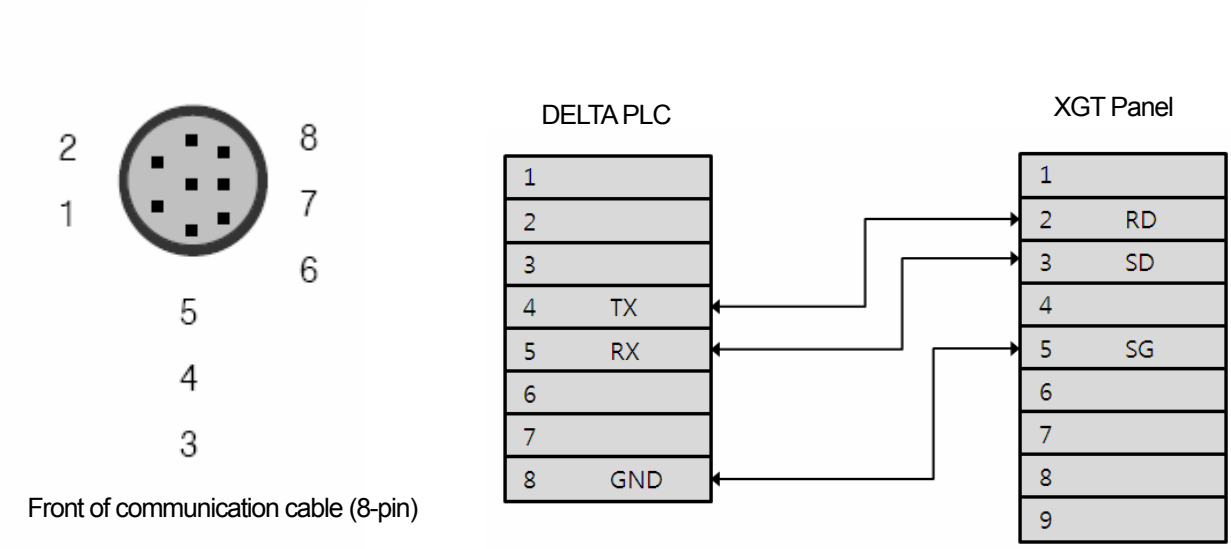

The communication parameters of DELTA DVP are as follows.

Parameter	composition
Communication speed	9600, 19200, 38400, 57600, 115200
Parity Bit	NONE, ODD, EVEN
Data Bit	7, 8 Bits
Stop Bit	1, 2 Bit
Communication type	RS-232
Protocol	ASCII

Tip

(1) Cautions

- ► We recommend shield connection for stable communication. Please see the Chapter 2 for shield connection method.
- ►The connector and pin arrangement may be different according to the type of PLC module.

32.3 Communication Setting

32.3.1 DELTA DVP configuration

The parameters of DELTA DVP Series communication of XGT Panel are configured from the XP-Builder. (See users' manual for XP-Builder)

(1) Configuration from XP-Builder

XP-Builder basically provides communication parameter for CPU module loader.

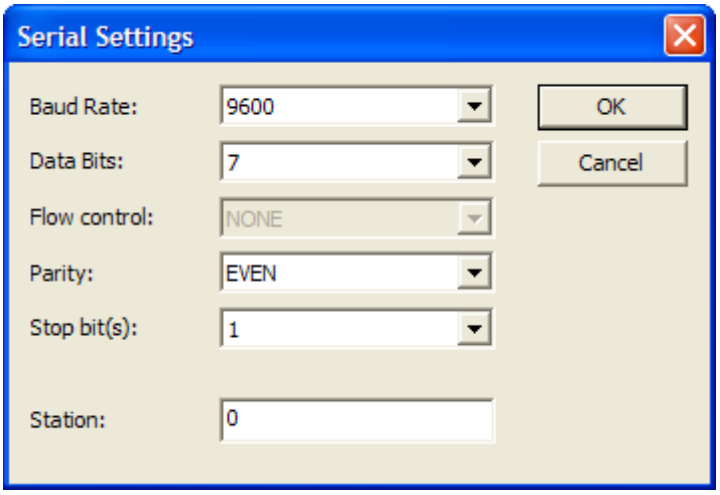

Tip

(1) Check out communication status

► If the status of communication with the DELTA DPV Series module cannot be verified, use Diagnostics function and PLC information function of XGT Panel to verify the communication status of XGT Panel. (See users' manual of XGT Panel)

(2) Cautions when configuring XP-Builder

► Configure as follows when generating project or configuring communication.

► Use the transmission waiting time flexibly according to the communication composition. (Recommended: 0ms)

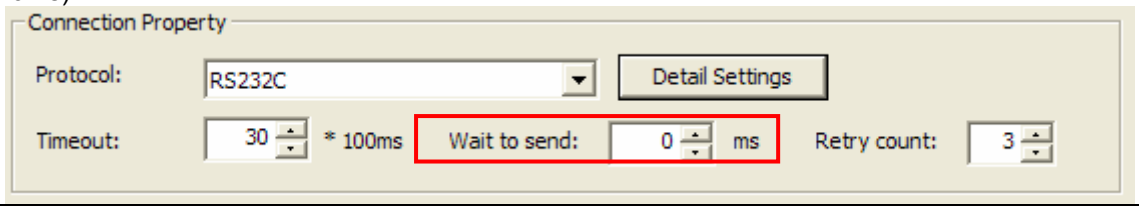

32.4 Available Devices

Devices to be available for XGT Panel are as follows.
Current version does not support 'R' Area.

32.4.1 Devices available for DELTA DVP EH

Area	Size	Bit point	Word data	Remarks
X	256 points	X000 ~ X377	X000 ~ X360	Octal number[1)]
Y	256 points	Y000 ~ Y377	Y000 ~ Y360	Octal number[1)]
M	1536 points	M0000 ~ M1535	M0000 ~ M1520	Decimal number[2)]
	2560 points	M1536 ~ M4095	M1536 ~ M	
S	1024 points	S0000 ~ S1023	S0000 ~ S4080	Decimal number[2)]
TS	256 points	TS000 ~ TS255	-	Decimal number[3)]
CS	256 points	CS000 ~ CS255	-	Decimal number[3)]
TN			TN000 ~ TN511	Decimal number[4)]
CN			CN000 ~ CN199	Decimal number[4)]
			CN200 ~ CN255	
D			D0000 ~ D4095	Decimal number[5)]
			D4096 ~ D9999	

1) X, Y is Octal number. (Bit device)
Bit contact point (You can use octal number system.)
Ex) X000~X007, X010~X017, X020~X027, …… X070~X077, X100~X107, X110~X117….
Word contact point (Configure it as multiples of 16Bit.)
Ex) X000, X020, X040, X060, X100, X120 ……

2) M, S is decimal number. (Bit device)
Bit contact point (You can use decimal number system.)
Ex) M0000~M0009, M0010~M0019, X020~X029, ……
Word contact point (Configure it as multiples of16Bit.)
Ex) M0000, M0016, X032, X048, X064……
※ Since M0000~M1535 and M1536~MM4095 are different device areas, if you use continuous data (logging, data list viewer, recipe, bit consecutive write), it shall be divided in to two area.

3) TS, CS are decimal number. (Bit device)
Bit contact point (You can use decimal number system.)
Ex) TS0000 ~ TS255

4) TN, CN is decimal number. (Word device)
Word contact point
Ex) TN0 ~ TN255, CN0 ~ CN255
※Since CN0~CN199(16Bit) and CN200~CN255(32 Bit) are different device areas,
- CN199 cannot be used as 32bit device. (CN199 + CN200 are different devices)
- CN0~CN199 area and CN200~CN255 area cannot be used consecutively. (That means, if continuous data (logging, data list viewer, recipe, etc.) is used from CN190 to CN210, it shall be divided into two areas like CN190~CN199, and CN200 - CN210.
※When using CN200~CN255, select 32 bit from figure displayer, figure input, and conduct "continuous copy," then it is generated like CN200, CN202, CN204…. Since it is 32bit device from CN200, the address should be increased by 1. That means, you have to revise it as CN200, CN201, CN202, CN203….

5) D is decimal number. (Word device)
Word contact point
Ex) D0 ~ D4095, D4096~ D9999
※ Since D0000 ~D4095 and D4096~D9999 are different device areas,
- D4095 cannot be used as 32 Bit device.
- D0~D4095 area and D4096~D9999 area cannot be used consecutively. (That means, if continuous data (logging, data list viewer, recipe, etc.) is used from D4090 to D4100, then it shall be divided into two areas like D4090 ~ D4095 and D4096 ~ D4100.

Tip

(1) Cautions
► Please see the manual for XP-Builder for how to use the device and details.
► Please be sure not to be out of the range of device area.
► The range of device may be varied according to CPU module.

Chapter 33 Fuji: MICREX-SX Series SIO

Fuji Electric Systems' MICREX-SX series PLC driver is provided from V1.22. If you use the version prior to V1.22, please use XP-Builder and XGT Panel software with V1.22 or higher from the homepage.

33.1 PLC List

XGT Panel is available for connection with Fuji MICREX-SX.

PLC name	CPU module	Connection type	Communication type	Connection module	Remarks
SPH Series	SPH200 (NP1PH-08 / NP1PH-16) SPH300 (NP1PS-32 / NP1PS-32R / NP1PS-74 / NP1PS-74R / NP1PS-117 / NP1PS-117R) SPH2000 (NP1PM-48E)	Link method	RS-232C / RS422	NP1S-RS1, NP1S-RS2, NP1S-RS4	

Tip

(1) Terminology

► Link: This refers to conducting communication with communication module.

(2) Fuji MICREX-SX communication setup is conducted through MICREX-SX loader program.

(3) Cautions

► Please see users' manual of Fuji MICREX-SX for detailed supporting information. Also, supporting items may be changed by Fuji Electric Systems regardless of this product.

33.2 Wiring Diagram

33.2.1 RS-232C communication method

Wiring of 1:1 RS-232 communication method is as follows.

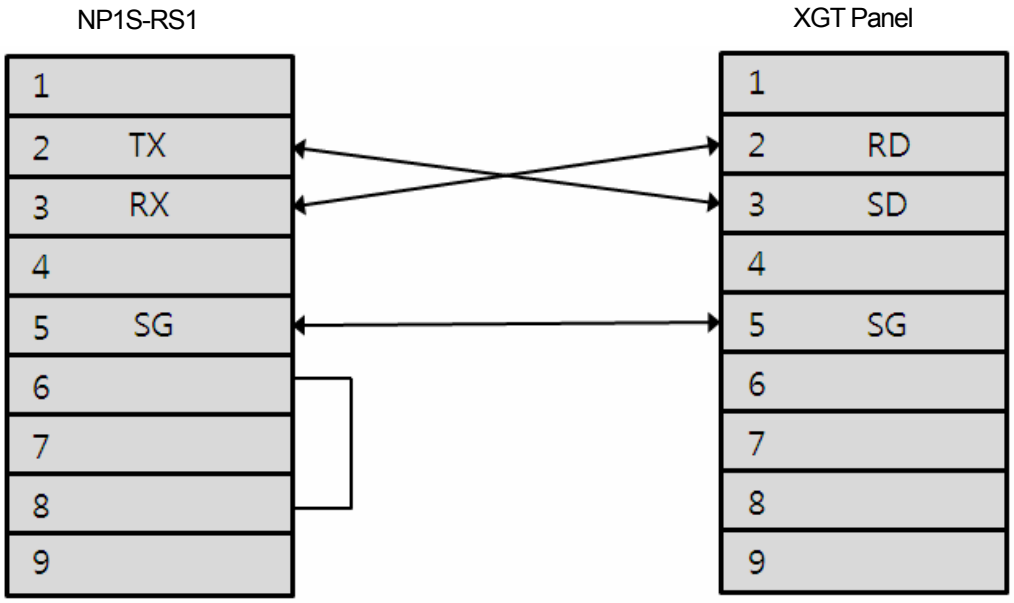

The communication parameters of MICREX-SX have to be set in accordance with PLC setting. Basic parameter is as follows.

Parameter	composition
Communication speed	38400
Parity Bit	EVEN
Data Bit	8 Bits
Stop Bit	1
Communication type	RS-232
Mode Selection Switch	'1'

Tip

(1) Cautions

► **We recommend shield connection for stable communication.** Please see the Chapter 2 for shield connection method.

►The connector and pin arrangement may be different according to the type of PLC module.

►For RS-232C communication, Mode Selection Switch has to be '1'.

33.2.2 RS-422 communication method

Wiring of 1:1 RS-422 communication method is as follows.

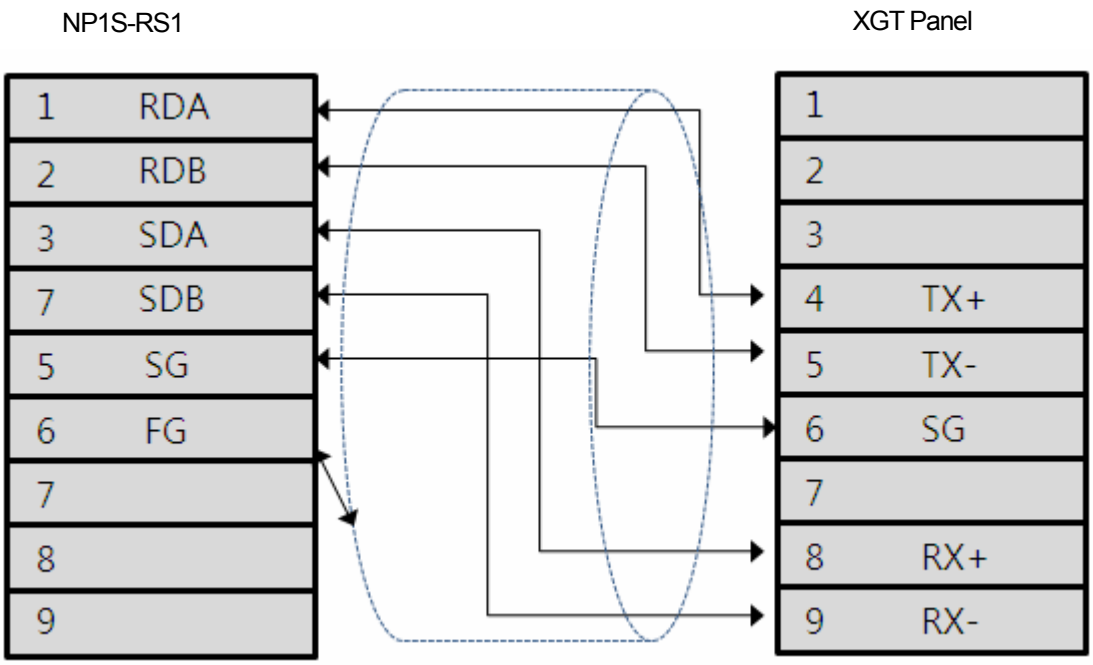

The communication parameters of MICREX-SX have to be set in accordance with PLC setting. Basic parameter is as follows.

Parameter	composition
Communication speed	38400
Parity Bit	EVEN
Data Bit	8 Bits
Stop Bit	1
Communication type	RS-422
Mode Selection Switch	'2'

Tip

(1) Cautions

- ► **We recommend shield connection for stable communication.** Please see the Chapter 2 for shield connection method.
- ►The connector and pin arrangement may be different according to the type of PLC module.
- ►For RS-422 communication, Mode Selection Switch has to be '2'.

33.3 Communication Setting

33.3.1 FUJI MICREX-SX Link configuration

The parameters of MICREX-SX Link communication of XGT Panel are configured from the XP-Builder. (See users' manual for XP-Builder)

(1) Configuration from XP-Builder

XP-Builder basically provides communication parameter for CPU module loader.

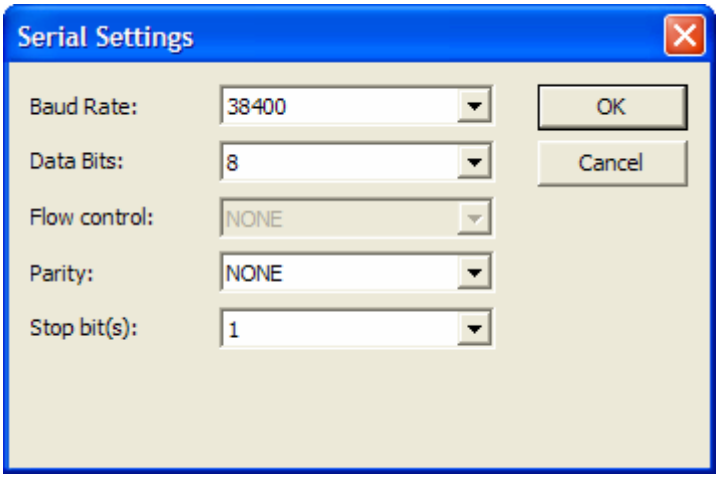

Tip

(1) Check out communication status

► If the status of communication with the Fuji MICREX-SX Link module cannot be verified, use Diagnostics function and PLC information function of XGT Panel to verify the communication status of XGT Panel. (See users' manual of XGT Panel)

(2) Cautions when configuring XP-Builder

► Configure as follows when generating project or configuring communication.

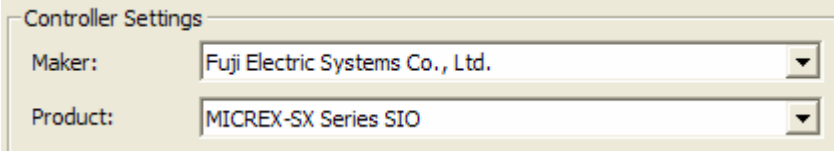

► Use the transmission waiting time flexibly according to the communication composition. (Recommended: 0ms)

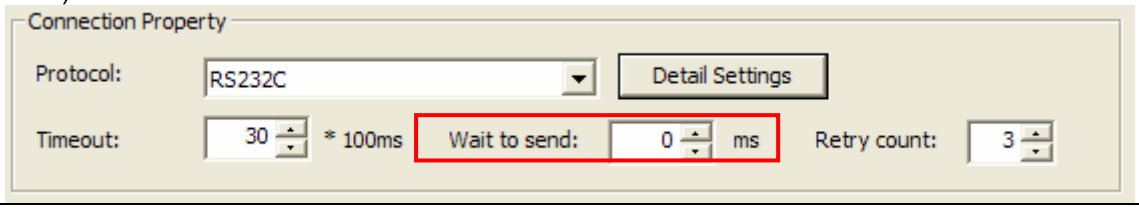

33.4 Available devices

33.4.1 Devices available for Fuji MICREX-SX

Area	Bit point	Word data	Remark
INPUT Memory	%IX□.000.00 ~ %IX□.511.15	%IW□.000 ~ %IW□.511	
OUTPUT Memory	%QX□.000.00 ~ %QX□.511.15	%QW□.000 ~ %QW□.511	
Standard Memory	%MX□.1.00000.00 ~ %MX□.1.1703935.15	%MW□.1.00000 ~ %MX□.1.1703935	
Retain Memory	%MX□.3.00000.00 ~ %MX□.3.262143.15	%MW□.3.00000 ~ %MX□.3.262143	
System Memory	%MX□.10.00000.00 ~ %MX□.10.65535.15	%MX□.10.00000 ~ %MX□.10.65535	

※Input / Output Memory Address Expression

Bit Address

%IX□. 0. 0

- Bit No: 0~15
- Address : Word number
- SX-BUS Unit No (1~238)

WORD Address

%IW□. 0

- Address : Word number
- SX-BUS Unit No (1~238)

※Standard / Retain / System Memory Address Expression

Bit Address

%MX□. 1. 0. 0

- Bit No: 0~15
- Address : Word number
- Memory type (1:Standard , 3 : Retain, 10 : System)
- CPU No (0~7) (In case of 0, %MW1.00000(Address))

WORD Address

%MW□. 1. 0

- Address : Word number
- Memory type (1:Standard , 3 : Retain, 10 : System)
- CPU No (0~7) (In case of 0, %MW1.00000(Address))

Tip

► Please see the manual for XP-Builder for how to use the device and details.
► Please be sure not to be out of the range of device area.
► The range of device may be varied according to CPU module.

Chapter 34 AB: PLC DF-1

Rockwell Automation Inc.'s ControlLogix/CompactLogix, MicroLogix Series PLC driver is supported in the V1.23 or above. For V1.23, download it from our web site.

34.1 PLC List

XGT Panel can be connected with the following AB PLC through CPU Direct connection.

PLC name	CPU module	Connection method	Communication method	Connection module	Remark
CompactLogix	1769 CompactLogix	CPU Direct	RS-232C	CPU	RSLogix5000(Programming tool)
ControlLogix	1768 ControlLogix				
MicroLogix	MicroLogix1000 MicroLogix1100 MicroLogix1200 MicroLogix1400 MicroLogix1500				RSLogix500/ RSLogix Micro

Note

(1) Term description

► CPU Direct: means serial communication through loader port of CPU module.

(2) Programming tool

► RSLogix5000 – ControlLogix, CompactLogix

► RSLogix500 – PLC-5, SLC500, MicroLigix

(3) Notice

► For further information, refer to AB PLC manual. The supported items can be changed by Rockwell Automation Inc. regardless of our product.

34.2 Wiring Diagram

34.2.1 Control/CompactLogix Series RS-232C communication

Wiring diagram for 1:1 RS-232C is as follows.

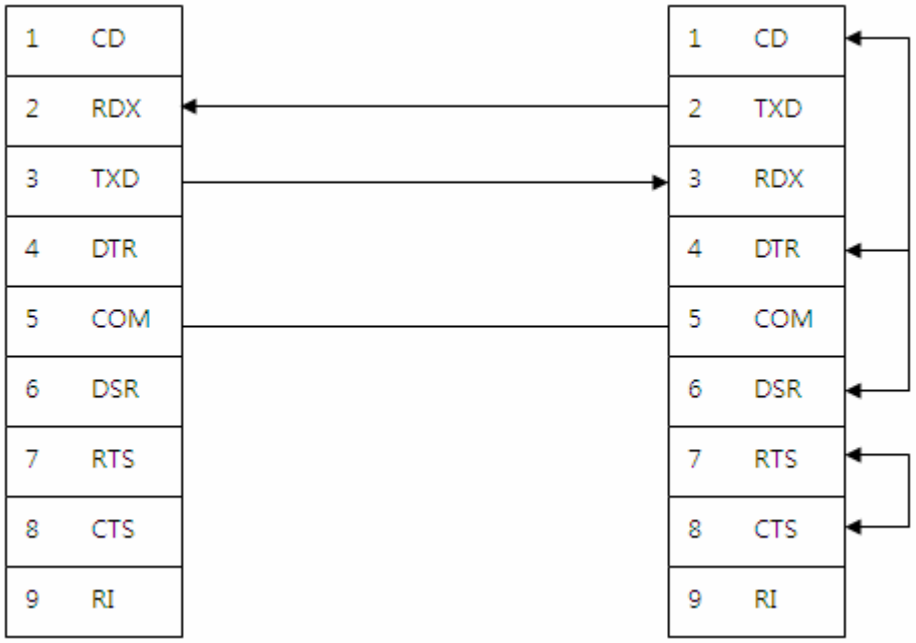

XGT Panel CompactLogix PLC

CompactLogix's communication parameter is fixed as follows.

Parameter	Configuration
Comm. speed	9600, 19200, 38400
Parity Bit	NONE, EVEN
Data Bit	8 Bits
Stop Bit	1 Bit
Comm. method	RS-232
Protocol	ASCII

34.2.2 MicroLogix Series RS-232C communication

Wiring diagram for 1:1 RS-232C is as follows.

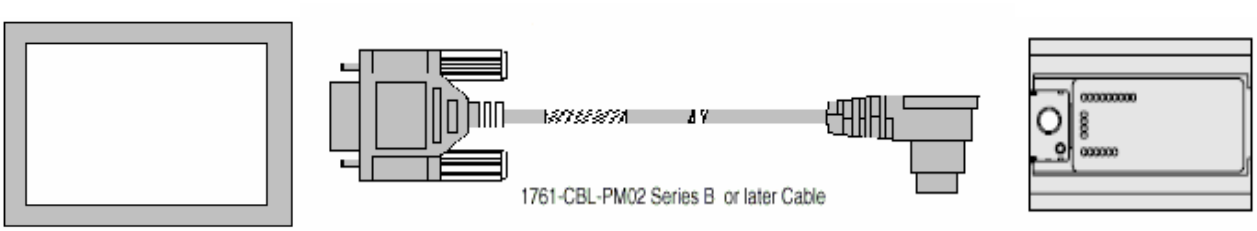

The following is cable wiring diagram.

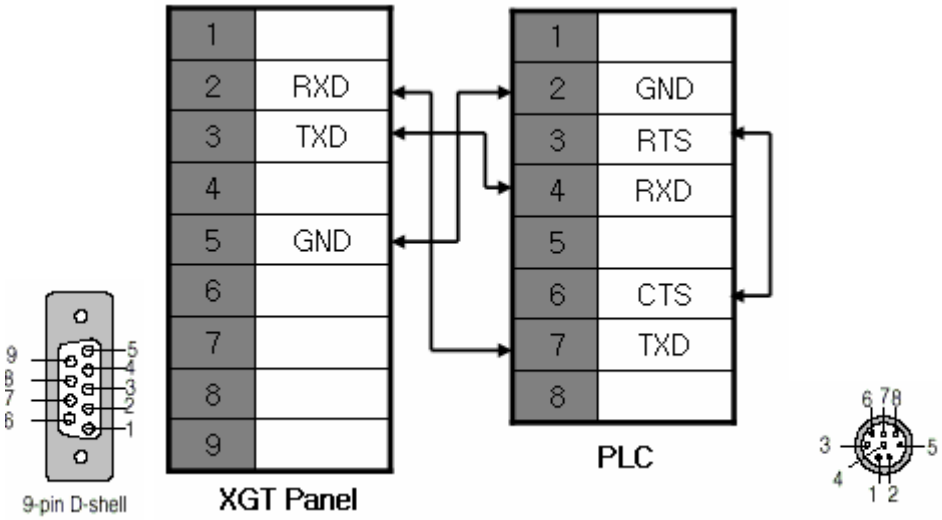

You can use the loader cable of the MicroLogix.
Communication parameter of MicroLogix is fixed as follows.

Parameter	Configuration
Comm. Speed	9600, 19200, 38400
Parity Bit	NONE, EVEN
Data Bit	8 Bits
Stop Bit	1 Bit
Comm. Method	RS-232
Protocol	ASCII
Error detect	BCC

Notice

(1) Notice
► The connector and pin array can ne different according to PLC module type.

34.3 Communication Setting

34.3.1 AB Control/CompactLogix and MicroLogix setting

AB PLC Series comm. Parameter of the XGT Panel can be set at the XP-Builder. (Refer to XP-Builder manual)

(1) Setting at the XP-Builder

XP-Builder provides the communication parameter about CPU module loader basically.

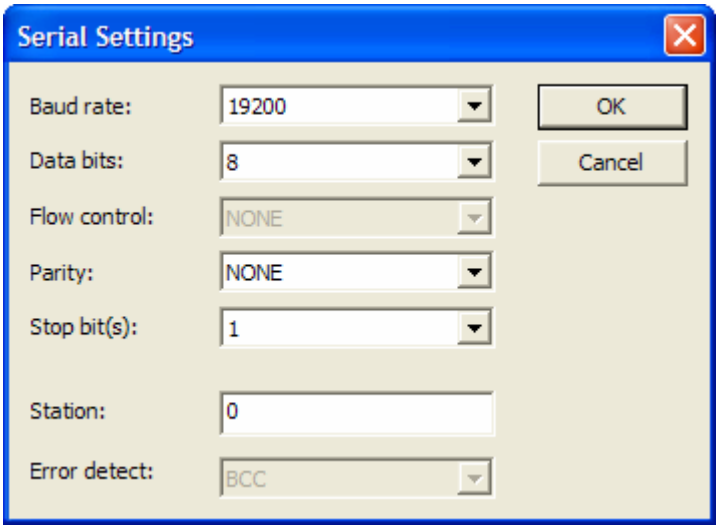

Notice

(1) Checking communication status

► When you can't check communication status with AB Control/CompactLogix Series module, use the Diagnostics function and PLC Information function of the XGT Panel. (Refer to XGT Panel manual.)

(2) Notice in XP-Builder setting

► Create the project and set the communication as follows.

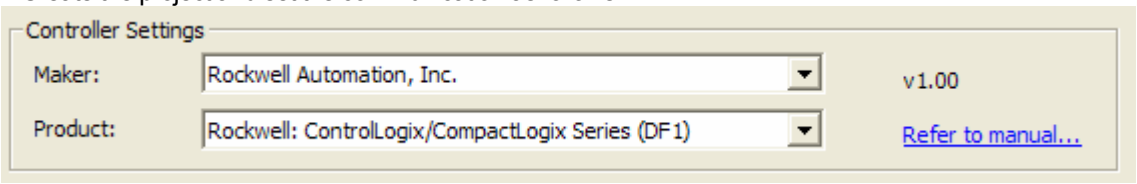

► Change the "Wait to send" item according to communication configuration. (recommendation: 0ms)

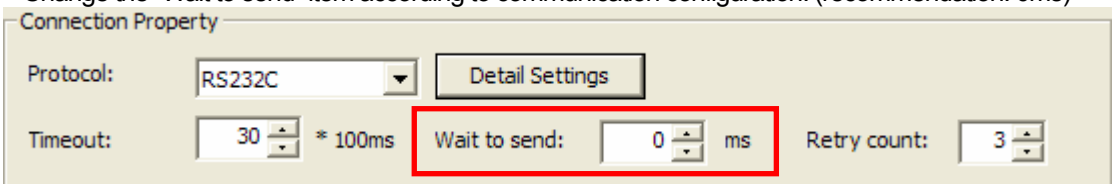

(2) Setting at the RSLogix5000 – In case of Control/CompactLogix

1) Double-click [Controller] at the project window of RSLogix5000.

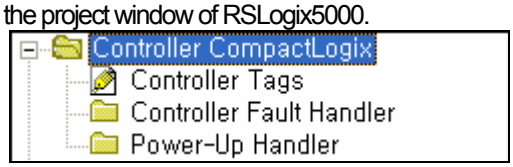

2) Move to [Serial Port] tap at the [Controller Properties] dialog box.

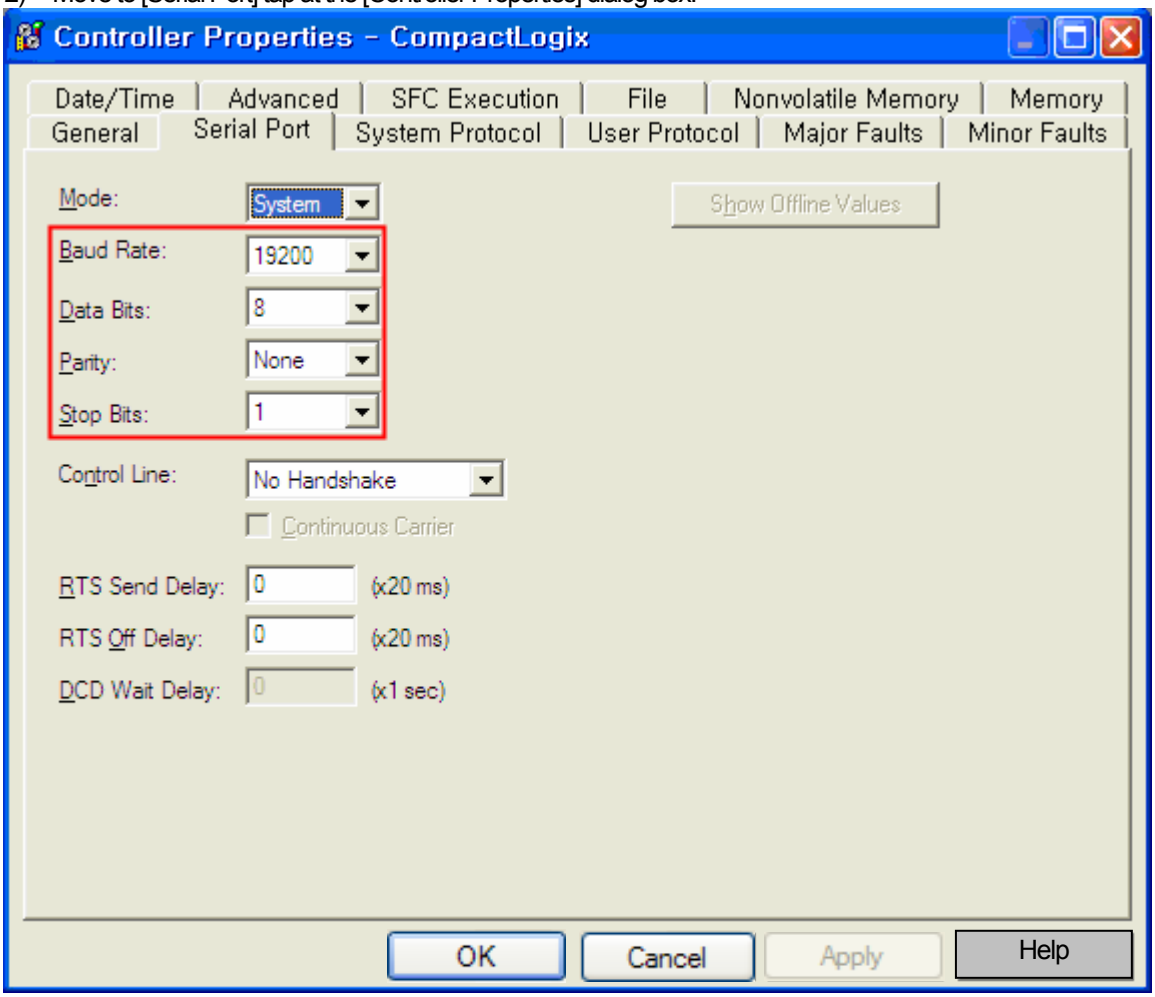

3) After changing communication settings, if you press [OK] button, PLC's communication settings change and connection between PLC and RSLogix5000 is disconnected.

(3) Setting at the RSLogix500 – In case of MicroLogix

1) Double-click [Controller]-[Channel Configuration] at the project window of RSLogix500.

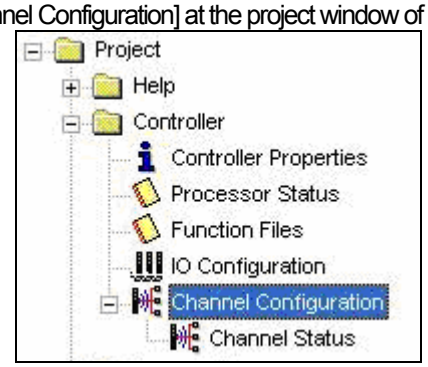

2) Move to [Channel 0] tap at [Controller Configuration] dialog box.

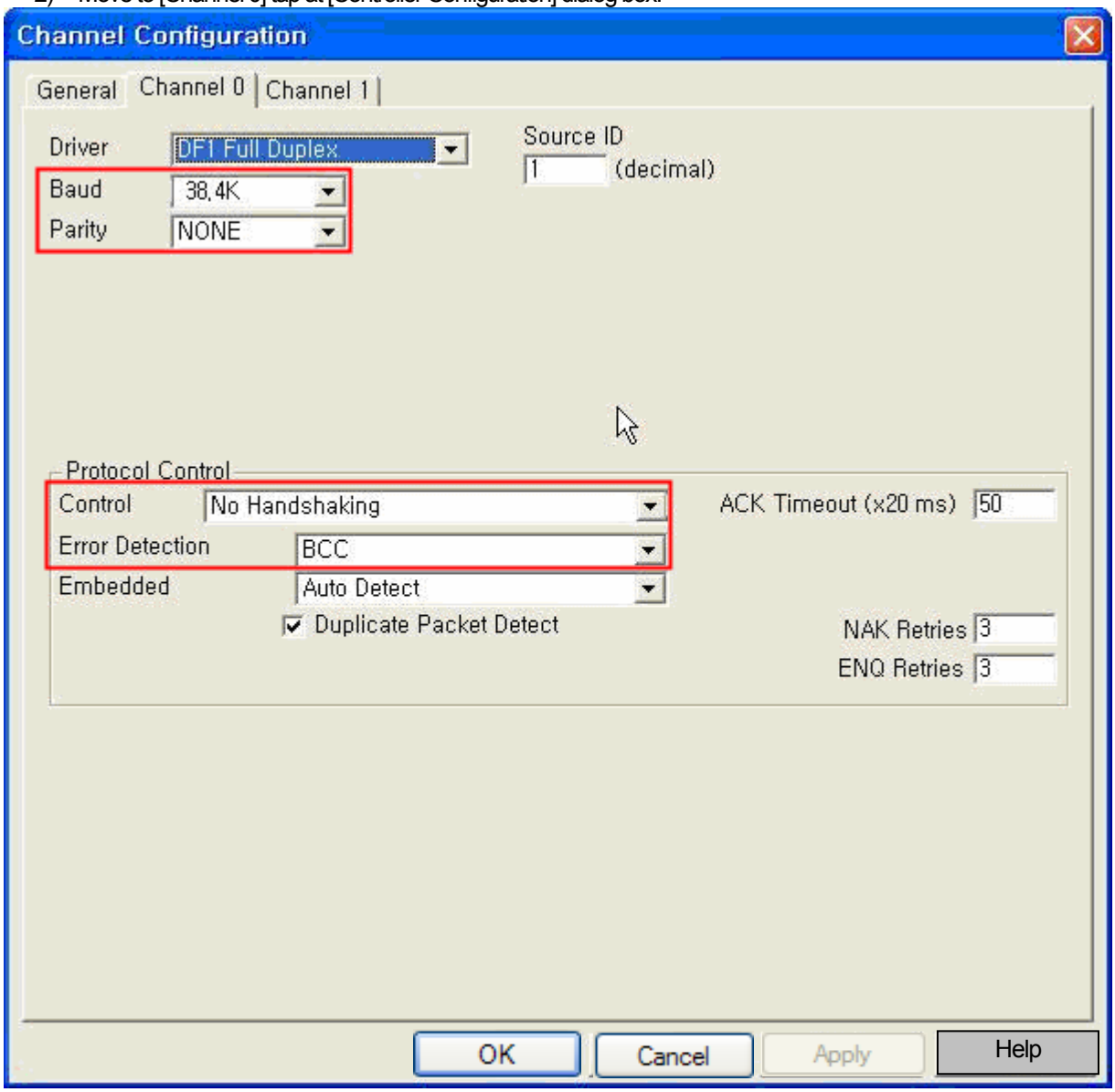

3) After changing communication settings, if you press [OK] button, PLC's communication settings change and connection between PLC and RSLogix5000 is disconnected.

34.4 Available Device

The devices available in the XGT Panel are as follows.

34.4.1 The devices available in the CompactLogix

Area	Size	bit poit[1)]	Word data	Remark
BOOL	-	BOOL0:0/0 ~ BOOL999:999/31	BOOL0:000 ~ BOOL999:999	2)
INT	-	INT0:0/0 ~ INT999:999/15	INT0:000 ~ INT999:999	2)
REAL	-	-	REAL0:000 ~ REAL999:999	2)
DINT	-	DINT0:0/0 ~ DINT999:999/31	DINT0:000 ~ DINT999:999	2)
SINT	-	SINT0:0/0 ~ SINT999:999/7	SINT0:000 ~ SINT999:998	2)

1) When writing Bit data, it reads word data including bit data and changes bit, and then it writes Word data.
2) In order to use the device, create Controller Tag with the Control/CompactLogix device area through RSLogix5000. Create a Tag and define a Type of the Tag.
Type is as follows.
BOOL (32bit data type)
INT (WORD data type)
DINT (DWORD data type)
SINT (BYTE data type)
REAL (float data type)

3) In the RSLogix5000, select an upper menu [Logic] – [Map PLC/SLC Messages] and map the tag created in the RSLogix500 to File Number.
If you try to use the unmapped file number, communication error appears.

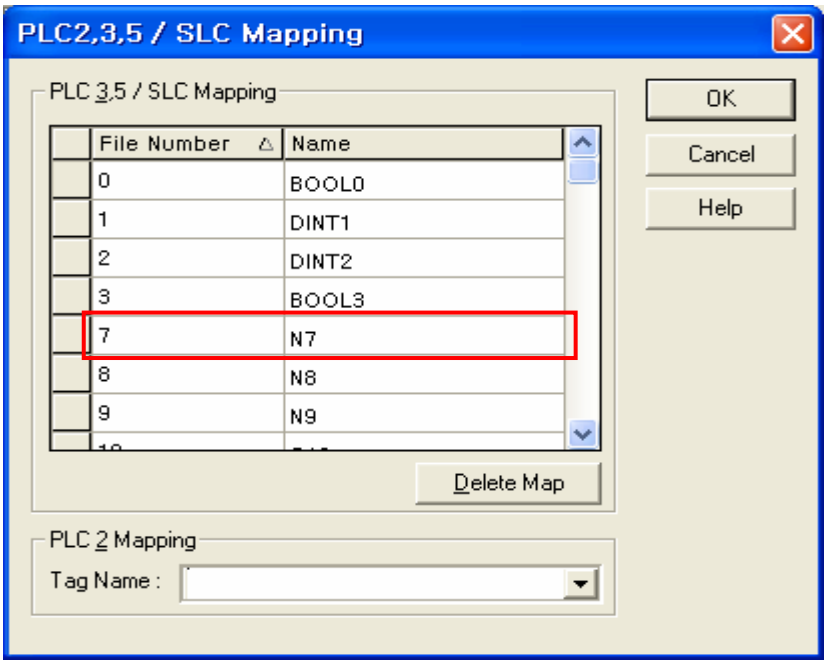

In the above example, BOOL0 Tag is mapped to File Number 0 and DINT1 Tag is mapped to File Number 1.
For easy classification, we names Tag with its Type.

For example, if you create a tag with Tag Name: N7, TYPE: INT, Element: 500 and map it to File Number 7, you can use File Number 7, Element 0~499 in the XP-Builder. At this time, if you use larger value than the already created Element, communication error appears.

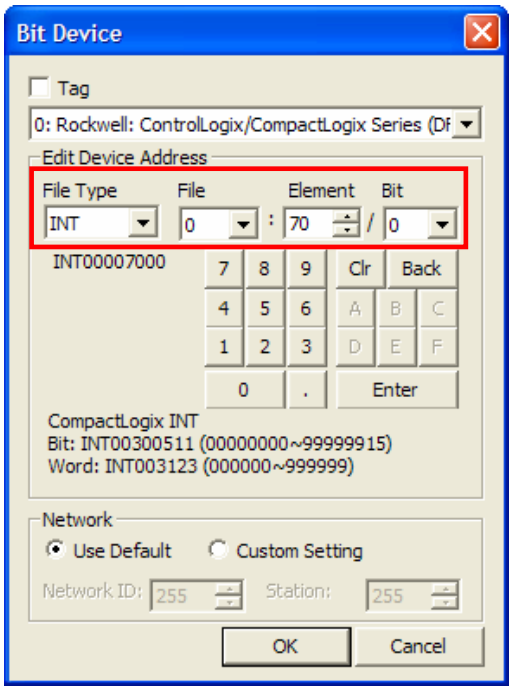

The mapped File Number is used as File Number in the XP-Builder. If File Number changes, it is considered as a different device.

4) The area other than REAL can be used as a bit device.

5) Though you create File Number with same type continuously, if File Number changes, when using continuous data (logging, data list viewer, recipe, bit continuous writing and etc.), you have to divide it for use.
Ex) INT007: 990 ~ INT008:010

6) When using continuous data (logging, data list viewer, recipe, bit continuous writing and etc.) after setting size of INT, SINT type deice as 32 bit, you have to use it not to change a File Number. And if File Number changes, you have to set again.
Ex) when using as follows in the Numeric Input, because SINT is Byte data type, in case of using a "Multi-copy", the address of next device is created as SINT011002. So pay attention.

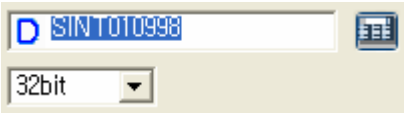

7) If you use "Multi-copy" after setting the size of BOOL, DINT, REAL type device as 32 bit, it increases by 2 like BOOL001000, BOOL001002……. But because the above device is 32 bit device, set to increase by 1. Namely, modify it to be like BOOL001000, BOOL001001, and BOOL001002……

Notice

(1) Notice

► For further information on how to use the device, refer to XP-Builder manual.

► Do not exceed the device area range

► Device range can be different according to the CPU module.

34.4.2 The device available in the MicroLogix

Device		Bit address		Word address		Remark
Input File	-	I0:0/0 ~ I8:255/15		I0:0 ~ I8:255		1)
Out File	-	O0:0/0 ~ O8:255/15		O0:0 ~ O8:255		1)
Status File	-	S0/0 ~ S163/15		S0 ~ S163		1)
Bit File	-	B3:0/0 ~ B3:255/15 B9:0/0 ~ B255:255/15		B3:0 ~ B3:255 B9:0 ~ B255:255		2)
Timer File	Enable	T4:0/ ~ T4:255/ T9:0/ ~ T255:255/	EN	T4:0 ~ T4:255 T9:0 ~ T255:255	-	2)
	Timing		TT		-	
	Done		DN		-	
	Preset		-		PRE	
	Accumulated		-		ACC	
Counter File	Up Enable	C5:0/ ~ C5:255/ C9:0/ ~ C255:255/	CU	C5:0 ~ C5:255 C9:0 ~ C255:255	-	2)
	Down Enable		CD		-	
	Done		DN		-	
	Overflow		OV		-	
	Underflow		UN		-	
	Update Acc		UA		-	
	Preset		-		PRE	
	Accumulated		-		ACC	
Control File	Enable	R6:0/ ~ R6:255/ R9:0/ ~ R255:255/	EN	R6:0 ~ R6:255 R9:0 ~ R255:255	-	2)
	Enable Unload		EU		-	
	Done		DN		-	
	Empty		EM		-	
	Error		ER		-	
	Unload		UL		-	
	Inhibit Comp.		IN		-	
	Found		FD		-	
	Length		-		LEN	
	Position		-		POS	
Integer File		N7:0/0 ~ N7:255/15 N9:0/0 ~ N9:255/15		N7:0 ~ N7:255 N9:0 ~ N255:255		2)
Floating Point File		-		F8:0 ~ F8:255 F9:0 ~ F255:255		32bit
String File		-		ST9:0 ~ ST255:255		
Long Word File		L9:0/0 ~ L255:255/31		L9:0 ~ L255:255		32bit

1) When writing Bit data, it reads word data including bit data and changes bit, and then it writes Word data.
2) Device 0~8 are fixed and 9~255 can be used for user programming.
3) For Input File, Out File, Status File, device range can be different according to the model. Especially, when using an offset, if device range is exceeded, error appears.
4) There are Series not supporting Floating Point File, String File, Long Word File basically, refer to PLC manual.
5) In order to use the device, set up the device through RSLogix500, RSLogix Micro. For the fixed device, you can use it after defining its size because size of the Elements is 1.
6) There are the fixed device and user created device at the left of RSLogix500 screen. If you double-click the device and select the Property, the following screen appears and you can set the size at the 'Elements'. Up to 256 is available. In case the size can be changed, you can use up to the fixed size.

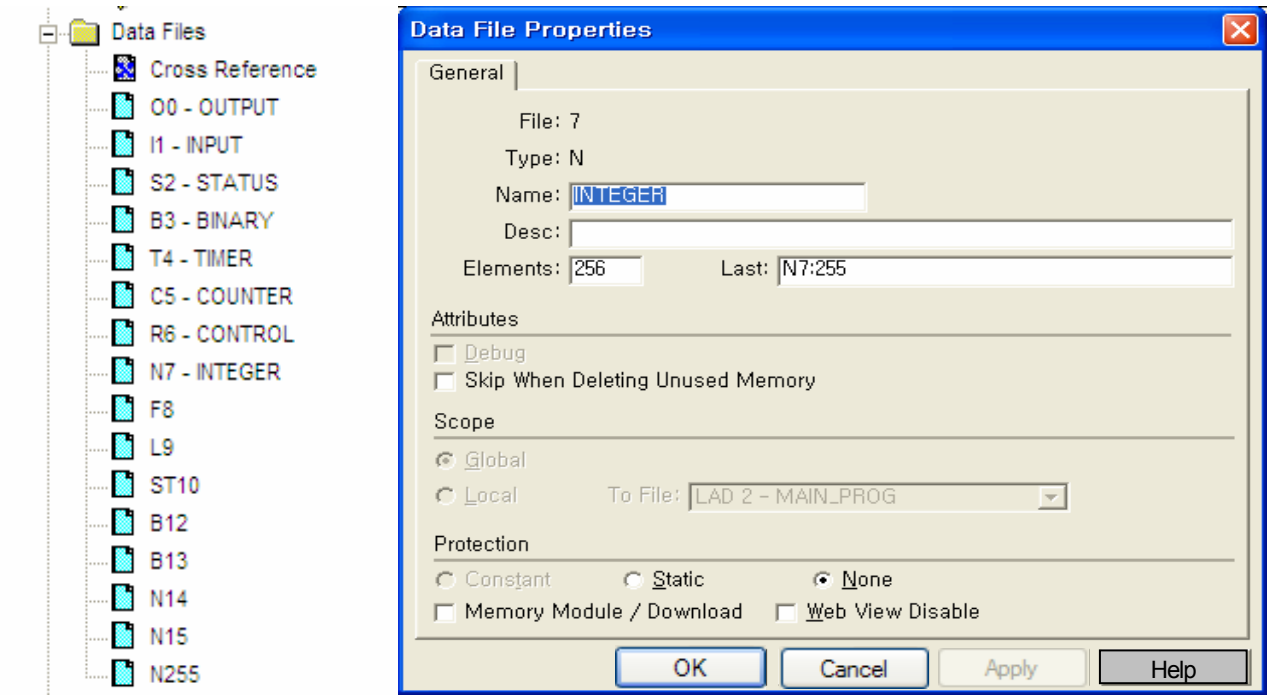

7) If device number changes, MicroLogix consider it as different device.
8) Though you create the device with same type continuously by using RSLogix500, RSLogix Micro, if Device Number changes, when using continuous data (logging, data list viewer, recipe, bit continuous writing and etc.), you have to divide it for use.
Ex) N014: 250 ~ N015:010

8) When using continuous data (logging, data list viewer, recipe, bit continuous writing and etc.) after setting size of device except 32 bit exclusive device (F, L) as 32 bit, you have to use it not to change a Device Number. And if Device Number changes, you have to set again.
Ex) when using as follows in the Numeric Input, because N device is Integer File, in case of using a "Multi-copy", the address of next device is created as N008001. So pay attention.

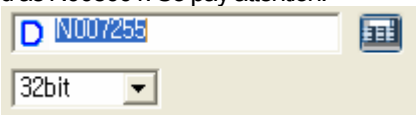

9) If you use "Multi-copy" after setting the size of F(Floating Point File), L(Long Word file) device as 32 bit, it increases by 2 like F008000, F008002……. But because the above device is 32 bit device, set to increase by 1. Namely, modify it to be like F008000, F008001, and F008002……
Tip) for other method, first set the size as 16 bit and use "Multi-copy". Then F008000, F008001, F008002 are created. After that, select the created object and change the size from 16 bit to 32 bit.
10) For naming rule of I, O device, first three digits are slot number plus I, O. Slot number of I, O device in the PLC is 0 and that of I,O device in the expansion slot is 1,2.....
Ex) when there is one expansion slot and slot number of that is 1, 5th bit of 0th Element of 1st slot is named I00100005.
.

Notice

► When using invalid address, error: 0x10 occurs.
►Do not exceed device area range.
► Device range can be different according to Series.

34.4.3 Control/CompactLogix device naming rule

This describes how to name the device of the Control/CompactLogix at the XP-Builder.
Set up the offset address according to the digit count in the device expression.

Area	PLC	XP-Builder
BIT DEVICE	DINT1:12/17 File Type File Number Element Bit	INT007100 File Type File Number (3 digits) Element (3 digits) (3 digits) Element (2 digits) Bit
WORD DEVICE	INT7:100 File Type File Number Element	

34.4.4 MicroLogix device naming rule

This describes how to name the device of the MicroLogix at the XP-Builder.
Set up the offset address according to the digit count in the device expression

Data type	PLC	XP-Builder
Bit Integer File Bit File Input File Output File	N7:12/11 File Type File Number Element Bit	N00701211 File Type File Number (3 digits) Element (3 digits) Bit (2 digits)
Word Integer File Bit File Input File Output File	N7:123 File Type File Number Element	N007123 File Type File Number (3 digits) Element (3 digits)
Bit/Word Timer File Counter File Controller File Floating Point File String File ASCII File	T4:0/EN File Type File Number Element Sub Element	TEN004012 File Type File Number (3 digits) Element (3 digits) Sub Element

Chapter 35 HANYOUNG NUX: Temperature Controller

HANYOUNG NUX's Temperature Controller series PLC driver is provided from V1.23. If you use the version prior to V1.23, please use XP-Builder and XGT Panel software with V1.23 or higher from the homepage.

35.1 PLC List

XGT Panel is available for connection with HANYOUNG NUX Temperature Controller.

PLC name	CPU module	Connection type	Communication type	Connection module	Remarks
HANYOUNG NUX Temperature Controller		Link method	RS-422 / RS485		

Tip

(1) Terminology

► Link: This refers to conducting communication with communication module.

(2) HANYOUNG NUX Temperature Controller communication setup is conducted at the controller directly.

(3) Cautions

► Please see users' manual of HANYOUNG NUX Temperature Controller for detailed supporting information. Also, supporting items may be changed by HANYOUNG NUX regardless of this product.

35.2 Wiring Diagram

35.2.1 RS-485 communication method

Wiring of 1:1 RS-485 communication method is as follows.

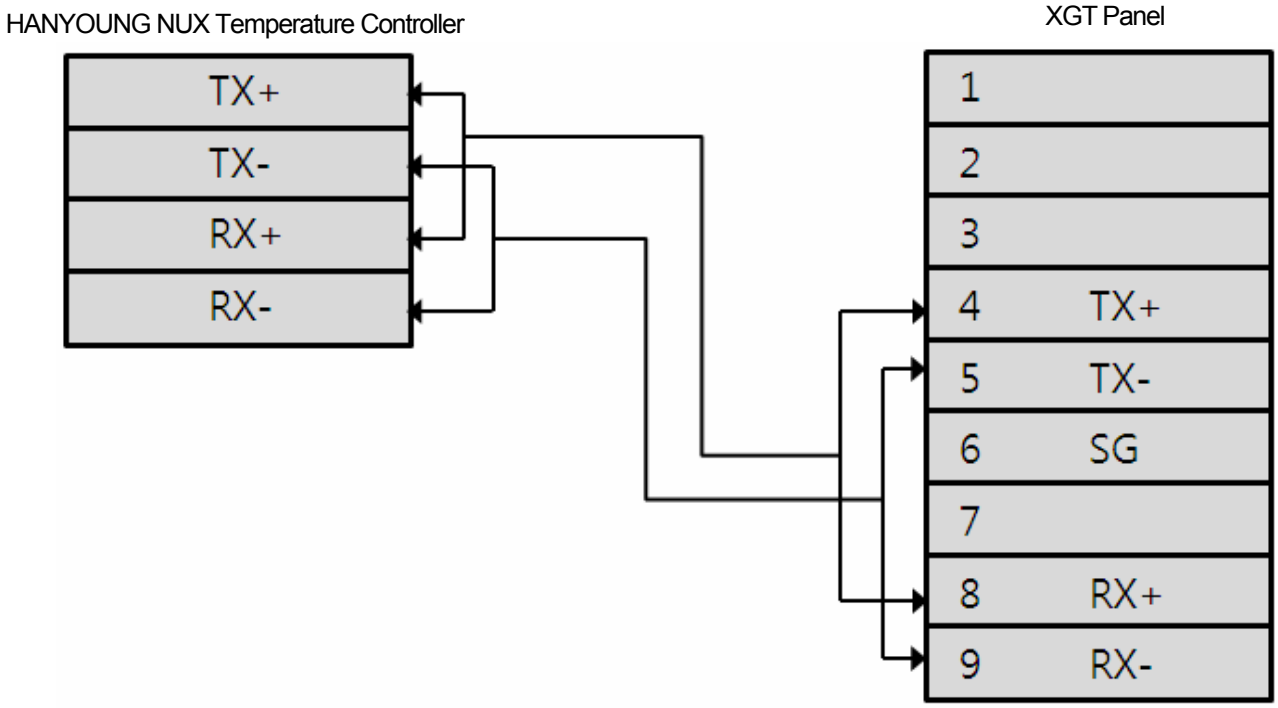

The communication parameters of HANYOUNG NUX Temperature Controller have to be set in accordance with PLC setting. Basic parameter is as follows.

Parameter	composition
Protocol selection	STD (standard protocol), SUM(standard protocol + CHECK SUM)
Communication speed	9600
Parity Bit	NONE, ODD, EVEN
Data Bit	7, 8 Bits
Stop Bit	1, 2

Tip

(1) Cautions

- ► **We recommend shield connection for stable communication.** Please see the Chapter 2 for shield connection method.
- ► Since whether to use Check Sum depends on the Protocol selection (STD, SUM), pay attention.

35.2.2 RS-422 communication method

Wiring of 1:1 RS-422 communication method is as follows.

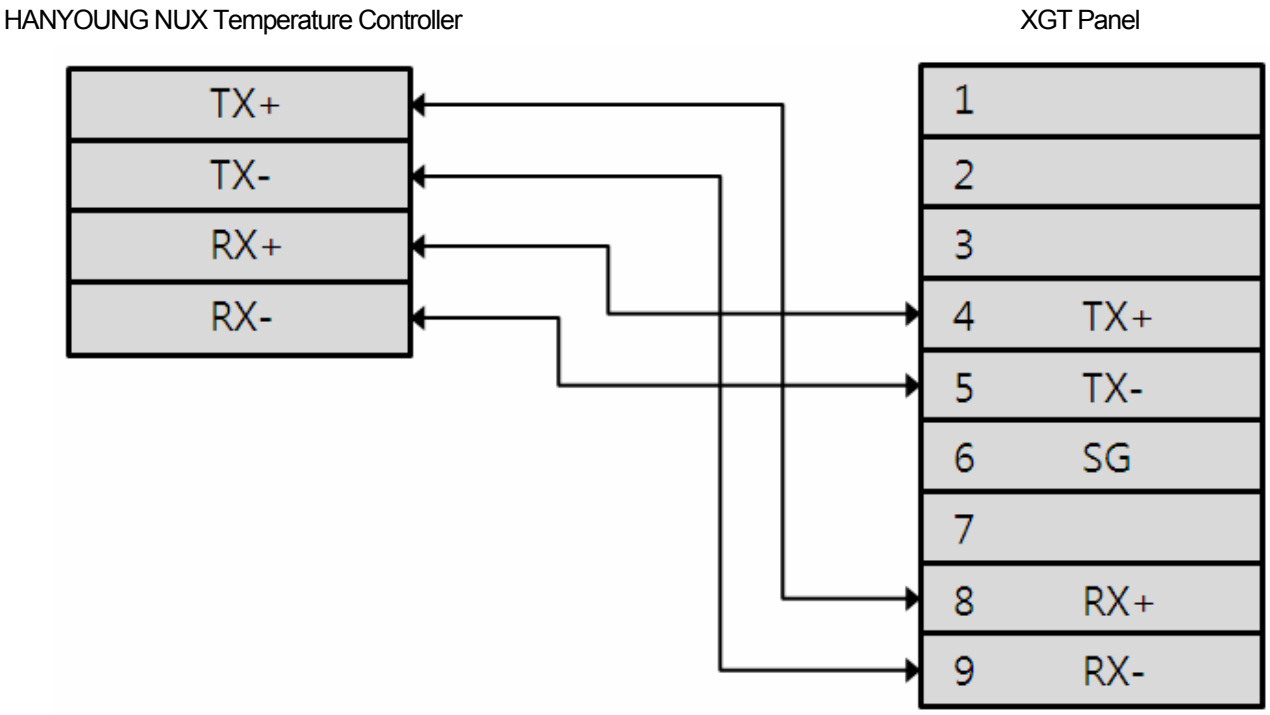

The communication parameters of HANYOUNG NUX Temperature Controller have to be set in accordance with PLC setting. Basic parameter is as follows.

Parameter	composition
Protocol selection	STD (standard protocol), SUM(standard protocol + CHECK SUM)
Communication speed	9600
Parity Bit	NONE, ODD, EVEN
Data Bit	7, 8 Bits
Stop Bit	1, 2

Tip

(1) Cautions

- ► **We recommend shield connection for stable communication.** Please see the Chapter 2 for shield connection method.
- ►The connector and pin arrangement may be different according to the type of PLC module.
- ►For RS-422 communication, Mode Selection Switch has to be '2'.

35.3 Communication Setting

35.3.1 HANYOUNG NUX Temperature Controller configuration

The parameters of HANYOUNG NUX Temperature Controller communication of XGT Panel are configured from the XP-Builder. (See users' manual for XP-Builder)

(1) Configuration from XP-Builder

XP-Builder basically provides communication parameter for CPU module loader.

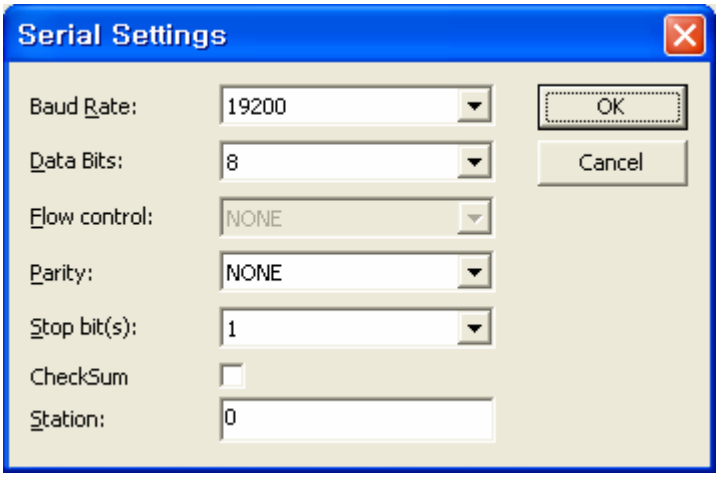

Tip

(1) Check out communication status

► If the status of communication with HANYOUNG NUX Temperature Controller module cannot be verified, use Diagnostics function and PLC information function of XGT Panel to verify the communication status of XGT Panel. (See users' manual of XGT Panel)

(2) Cautions when configuring XP-Builder

► Configure as follows when generating project or configuring communication.

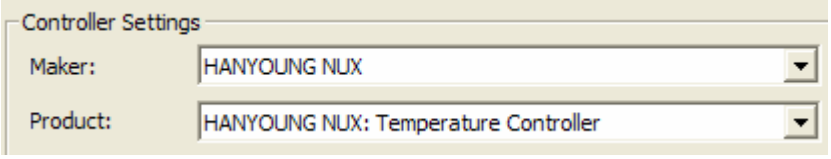

► Use the transmission waiting time flexibly according to the communication composition. (Recommended: 0ms)

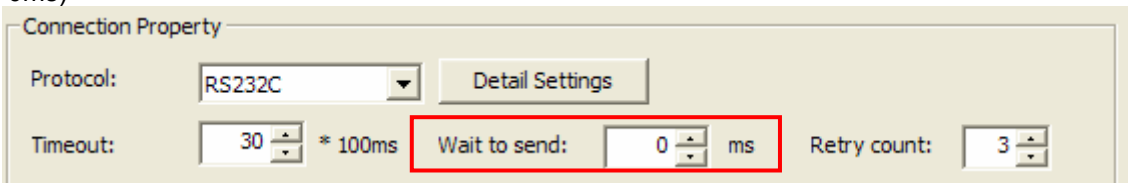

35.4 Available devices

Devices to be available for XGT Panel are as follows.

35.4.1 Devices available for Fuji MICREX-SX

Area	Range	Bit point	Word data	Read/Write	Remark
D	D001~D699	D001.0~D049.15	D001~D049	Read	Read only area
		D050.0~D099.15	D050~D099	Read/Write	User-defined area
		D100.0~D199.15	D100~D199	Read/Write	Operating statue confirm/Switching[1)]
		D200.0~D299.15	D200~D299	Read/Write	Programming[1)]
		D300.0~D399.15	D300~D399	Read/Write	SV setting and PID setting[1)]
		D400.0~D499.15	D400~D499	Read/Write	Parameter setting related with alarm[1)]
		D500.0~D599.15	D500~D599	Read/Write (0510~0516 read only)	Parameter setting related with transmission and remote/ Parameter confirm related with communication[1)]
		D600.0~D699.15	D600~D699	Read/Write	Parameter setting related with I/O[1)]
I	I001~I312	I001~I312	-	Read only	Read and bit only[2)]

1) Though this is Read/Write area, Write area can be varied according to the model. So refer to HANYOUNG NUX Temperature Controller manual.

2) I register is Read and bit only register and that may be varied according to the model. So refer to HANYOUNG NUX Temperature Controller manual.

Tip

► Please see the manual for XP-Builder for how to use the device and details.
► Please be sure not to be out of the range of device area.
► The range of device may be varied according to the controller type.

Chapter 36 RS Automation: N/NX-CCU

RS Automation's N/NX-CCU PLC driver is provided from V1.22. If you use the version prior to V1.22, please use XP-Builder and XGT Panel software with V1.22 or higher from the homepage.

36.1 PLC List

XGT Panel is available to connect with the following devices.

PLC name	CPU module	Connection type	Communication type	Connection module	Remarks
N7 Series	N7-C16CT (CPL02343C) N7-C32CT (CPL02543C)	Direct method	RS-232C	CPU	RS232C-equipped module
N70 Series	N70-CPU70 N70-CPU750	Direct method	RS-232C	CPU CCU Unit	In case of CPU direct connection, use COM port
NX70 Series	NX70-CPU70 NX70-CPU750	Direct method	RS-232C	CPU CCU Unit	In case of CPU direct connection, use COM port
NX700 Series	NX-CPU700 NX-CPU750A NX-CPU750B NX-CPU750C NX-CPU750D	Direct method	RS-232C RS-485	CPU700P	In case of CPU direct connection, use COM port

Tip

(1) Cautions

- ► Not compatible with CCU+ module
- ► In case of CPU direct connection, though there are COM port and TOOL port, connect to COM port, not TOOL port.

36.2 Wiring Diagram

XGT Panel can connect to RS Automation N/NX-CCU through RS-232C, RS485.

36.2.1 RS-232C connection

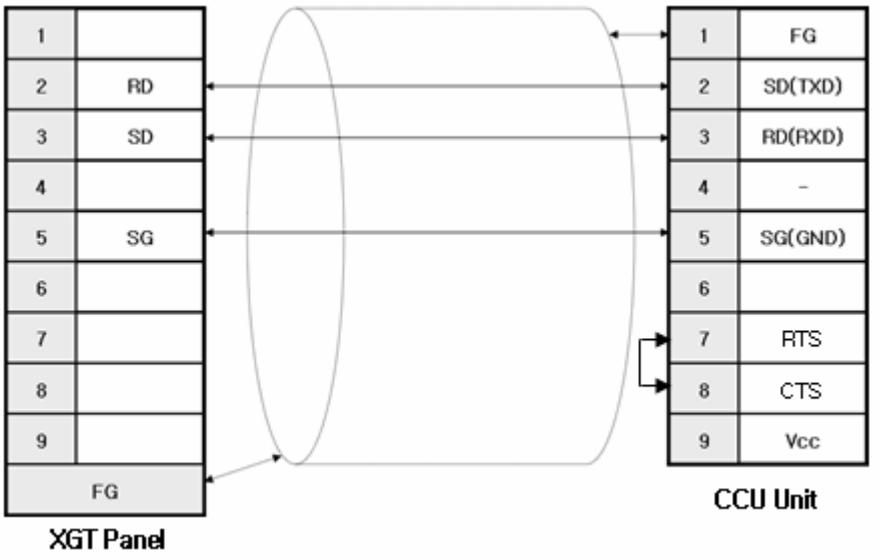

36.2.2 RS-485 connection

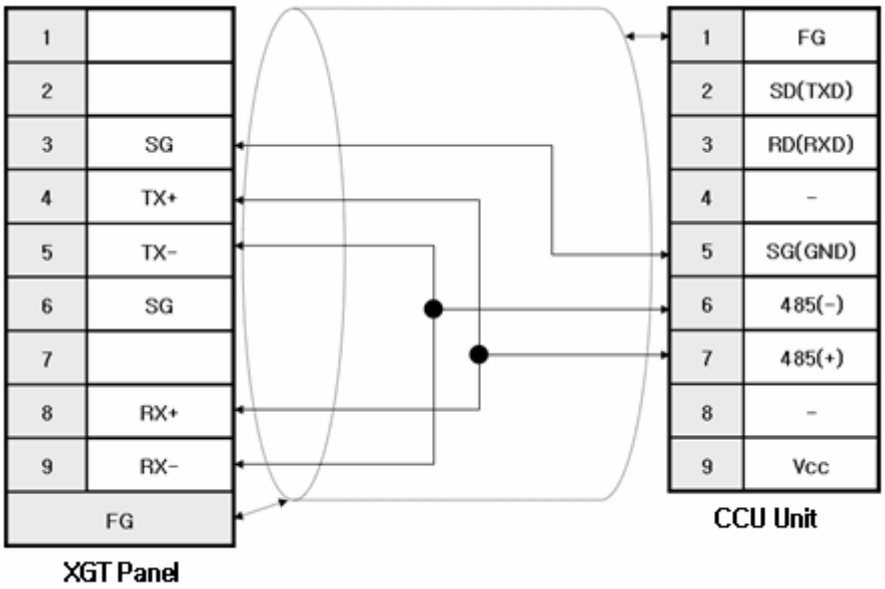

Tip

(1) Cautions
- ► Set the terminal switch of XGT Panel.
- ► If you use WinFPST Loader cable, communication may not be available.

36.3 Communication Setting

XGT Panel can be connected to RS Automation N/NX-CCU through RS-232C, RS485.

36.3.1 PLC setting

[When using COM port on the CPU]

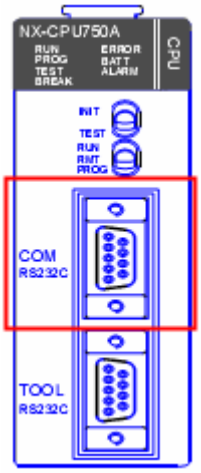

Communication setting of PLC can be changed through ladder software, WinFRST.
Select [Option]-[System registry setting]-[COM port setting] on the menu and set up as follows.

- Select operation: Computer link
- Terminal code: CR
- Head code: No STX
- Modem connection: No check
- Set other settings in accordance with detailed setting of XP-Builder

[When using CCU unit]

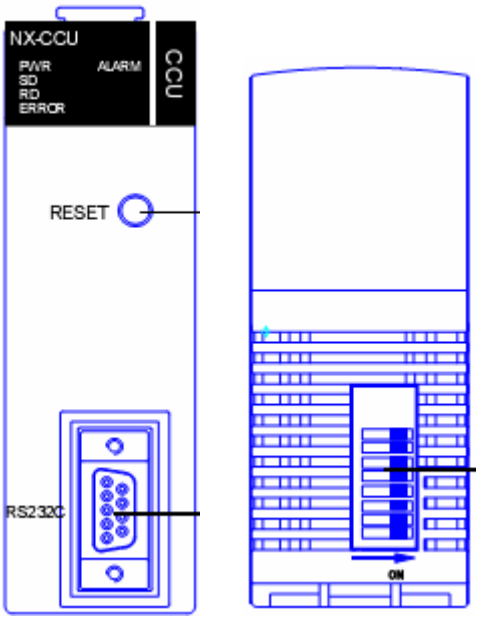

Communication setting of PLC can be changed through DIP switch on the bottom.

(1) For communication setting, refer to the following table.

	Bit position						Function	
	123	4	5	6	7	8		
DSW	000						Modem control	2400bps fixed
	100 010 110 001 101 011 111						Bard-rate	19,200 bps 9,600 bps 4,800 bps 2,400 bps 1,200 bps 600 bps 300 bps
		0 1					Data length	7 bit 8 bit
			0 1				Parity check	None Exist
				0 1			Parity setting	Odd EVEN
					0 1		STOP Bit length	1 bit 2 bit
						0 1	Control signal	Activate CTS, CD Deactivate CTS, CD

36.3.2 XGT Panel configuration

XGT Panel is configured from the XP-Builder. (See users' manual for XP-Builder)

(1)Controller setting
Select RS Automation for the maker, RS Automation: N/NX-CCU for the product.

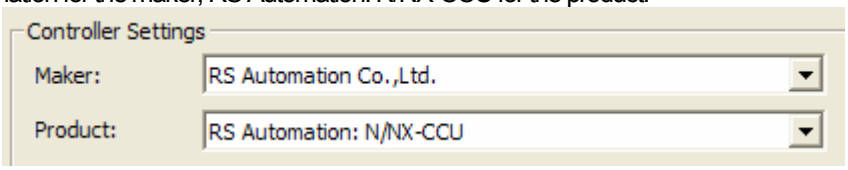

(2)Connection properties
Select RS-232C, RS-485 according to user environment

(3)Detailed connection option setting
Select Baud-rate, data bit, parity, stop bit according to user environment.

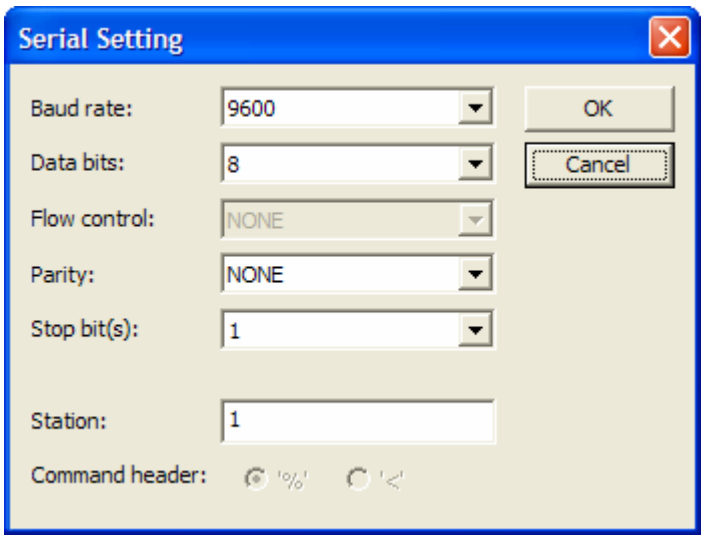

Station number means station number of destination deice. When station number is wrong, “Time out” is displayed on the top of XGT Panel screen. Check the station number.

Download the communication settings to XGT Panel

Tip

(1) Cautions

- ► In case of communication error, parameters such as baud-rate, data bit are identical.
- ► When “Time out” appears on the top of screen, check the station number.
- ► XGT Panel supports transmission speed more than 9600.

36.4 Available Devices

Devices to be available for XGT Panel are as follows.

Area	Size	Bit point	Word data	Remark
X	512 words	X000.0 ~ X511.F	X000 ~ X511	Read only
Y	512 words	Y000.0 ~ Y511.F	Y000 ~ Y511	
R	886 words	R000.0 ~ R885.F	R000 ~ R885	
L	640 words	L000.0 ~ L639.F	L000 ~ L639	
R9	11 words	R900 ~ R910.15	R900 ~ R910	Read only
T	3072 points	T0000 ~ T3071	-	Read only
C	3072 points	C0000 ~ C3071	-	Read only
SV	3072 words	-	SV0000 ~ SV3071	
EV	3072 words	-	EV0000 ~ EV3071	
DT	90512 words	-	DT00000 ~ DT90511	
LD	8448 words	-	LD0000 ~ LD8447	
FL	32765 words	-	FL0000 ~ FL32764	

- DT area is included in system register area. Since system register area is different according to CPU type, pay attention.
- When writing to system register area of DT area, communication error appears.

Tip

(1) Cautions

► Please be sure not to be out of the range of device area.

► The range of device may be varied according to the CPU module. For more information, refer to the manual of the connected devices.

Chapter 37 LSIS: XGT Servo

LSIS' XGT Servo driver is provided from V1.22. If you use the version prior to V1.22, please use XP-Builder and XGT Panel software with V1.22 or higher from the homepage.

37.1 Servo List

XGT Panel is available for communication connection with the following devices.

Series	CPU module	Connection type	Communication type	Connection module	Remarks
XDA-S Series	XDA-S001 XDA-S002 XDA-S004 XDA-S005 XDA-S008 XDA-S010 XDA-S0015 XDA-S020 XDA-S030 XDA-S045	Link method	RS-232C RS-485	-	Use COM port

Tip

(1) Cautions

► In case of RS232C and RS485 connection, connect to the COM port on the top of the driver

37.2 Wiring Diagram

Connecting to XGT Panel is available through RS-232C, RS485.

37.2.1 RS-232C connection

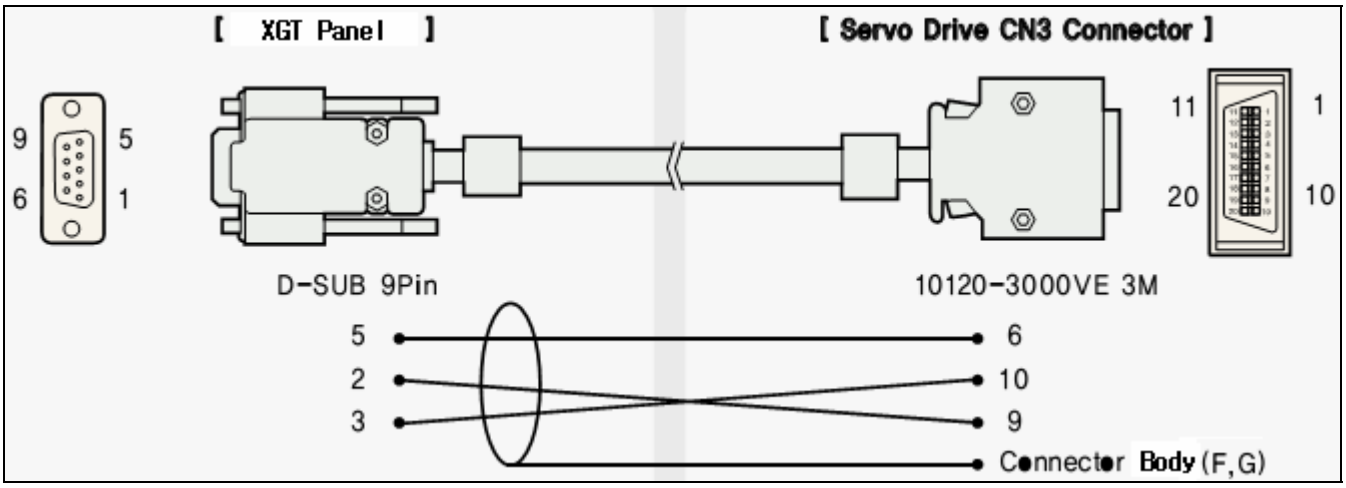

37.2.2 RS-485 connection

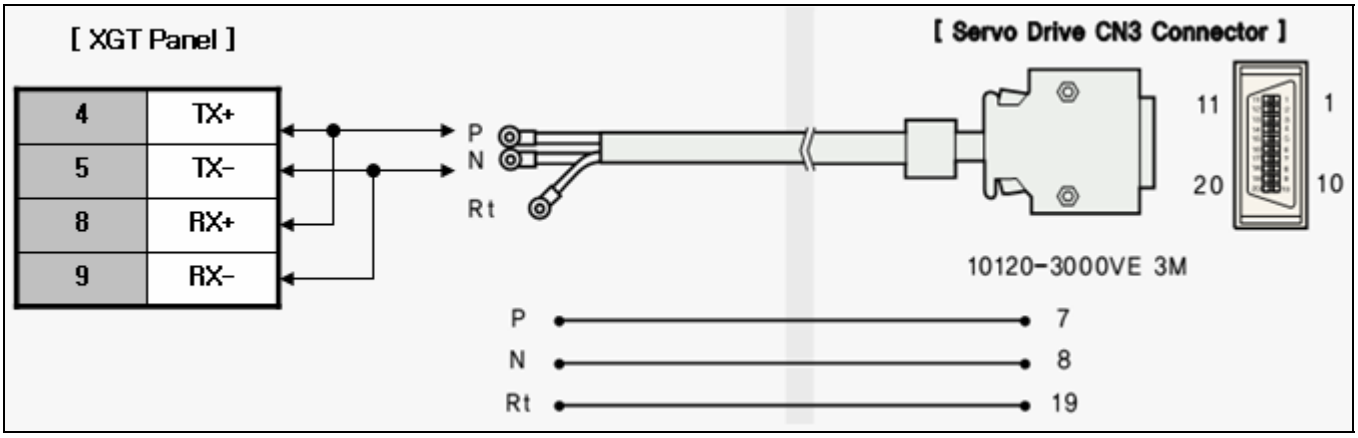

Tip

(1) Cautions

- ► Set the terminal switch of the XGT Panel
- ► When setting the terminal resistor of the servo, short the N terminal and R t terminal.

37.3 Communication Setting

37.3.1 Servo Configuration

(1) For communication settings, refer to the following table

Properties	Value
Data bit	8 bit
Parity	None
Stop bit	1
Speed	9600 ~ 57600

Communication speed is determined by the parameter P01-15 of the servo
Refer to the following table.

P01-15	RS-232C	RS485	P01-15	RS-232C	RS485
00	9600	9600	08	38400	9600
01	9600	19200	09	38400	19200
02	9600	38400	10	38400	38400
03	9600	57600	11	38400	57600
04	19200	9600	12	57600	9600
05	19200	19200	13	57600	19200
06	19200	38400	14	57600	38400
07	19200	57600	15	57600	57600

(2) ID setting of the servo is as follows.

Servo ID is determined by the parameter P01-18 of the servo
Range is 1~31.

37.3.2 Servo Configuration

You can set the communication of the XGT Panel through XP-Builder.

(1) Controller setting
Select RS Automation as the maker and LSIS: XGT Servo as the product

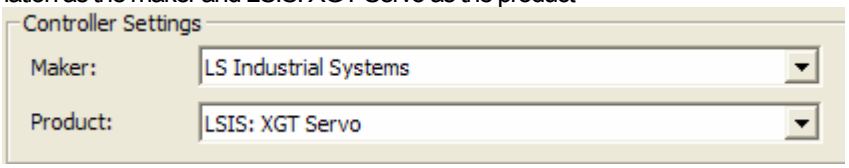

(2) Connection properties
For connection method, select RS-232C, RS-485 in accordance with user environment.

(3) Detailed connection option setting
Select Transmission speed in accordance with user environment

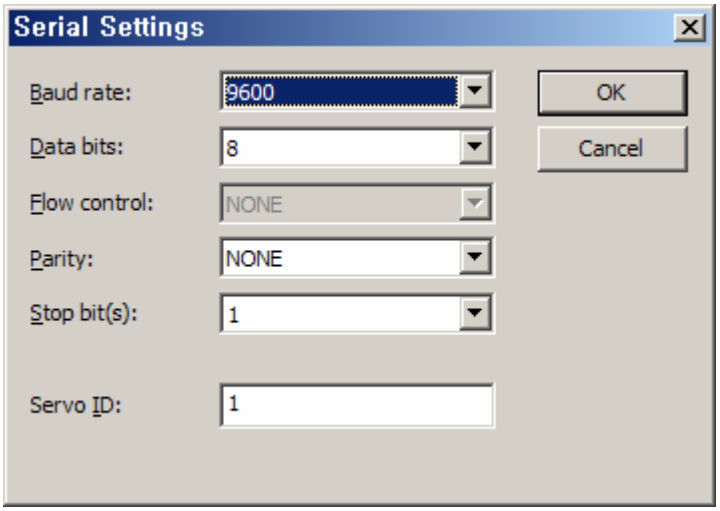

"Servo ID" means the ID of the partner servo. If servo ID is wrong, "Time out" will be displayed on the top of the XGT Panel screen. After setting, download to the XGT Panel.

Tip

(1) Cautions

- ▶ In case of communication error, make sure parameters such as baud-rate, data bit are identical.
- ▶ When "Time out" appears on the top of screen, check the servo ID.

37.4 Available devices

Devices to be available for XGT Panel are as follows.

Area	Size	Bit point	Word data	Remark
4	2205 words	40000.0 ~ 42205.15	40000 ~ 42205	1) 2)
ALM_CUR	1 word	-	ALM_CUR0	Current alarm of servo 3)
ALM_GET_H	1 point	ALM_GET_H0	-	Reading alarm history of servo 4) 5)
ALM_CLR	1 point	ALM_CLR0	-	Deleting alarm history of servo 4)
JOG_ON	1 point	JOG_ON0	-	Servo Jog On 4)
JOG_OFF	1 point	JOG_OFF0	-	Servo Jog Off 4)
JOG_CW	1 point	JOG_CW0	-	Servo Jog CCW 4)
JOG_CCW	1 point	JOG_CCW0	-	Servo Jog CW 4)
JOG_STOP	1 point	JOG_STOP0	-	Servo Jog stop 4)

Note1) For "4" device area, refer to device's manual.
Note2) Size is 32bit. When using the objects such as numeric input, specify 32bit size
Note3) Read only device
Note4) Write only device
Note5) Alarm history from the servo is stored in the internal memory HW0~HW9.

Tip

(1) Cautions

► Please be sure not to be out of the range of device area.

► The range of device may be varied according to the CPU of the connected device. For more information, refer to devices' manual.

Chapter 38 HIGEN: Servo

HIGEN' Servo driver is provided from V1.22. If you use the version prior to V1.22, please use XP-Builder and XGT Panel software with V1.22 or higher from the homepage.

38.1 Servo List

XGT Panel is available for communication connection with the following devices.

Series	CPU module	Connection type	Communication type	Connection module	Remarks
FDA6000 Series	FDA6001(C) FDA6002(C) FDA6004(C) FDA6005(C) FDA6010(C) FDA6012(C) FDA6015(C) FDA6020(C) FDA6030(C) FDA6045(C) FDA6075(C)N FDA6110(C)N FDA6150(C)N	Link method	RS-232C	-	Use CN3 port
			RS-485		Use CN4 port
FDA7000	FDA7001 FDA7002 FDA7004 FDA7005 FDA7010 FDA7015 FDA7020 FDA7030 FDA7045	Link method	RS-232C RS-485	-	Use COM port

Tip

(1) Cautions

► FDA5000 series is not supported.

38.2 Wiring Diagram

Connecting to XGT Panel is available through RS-232C, RS485.

38.2.1 RS-232C connection

- In case of FDA7000 series

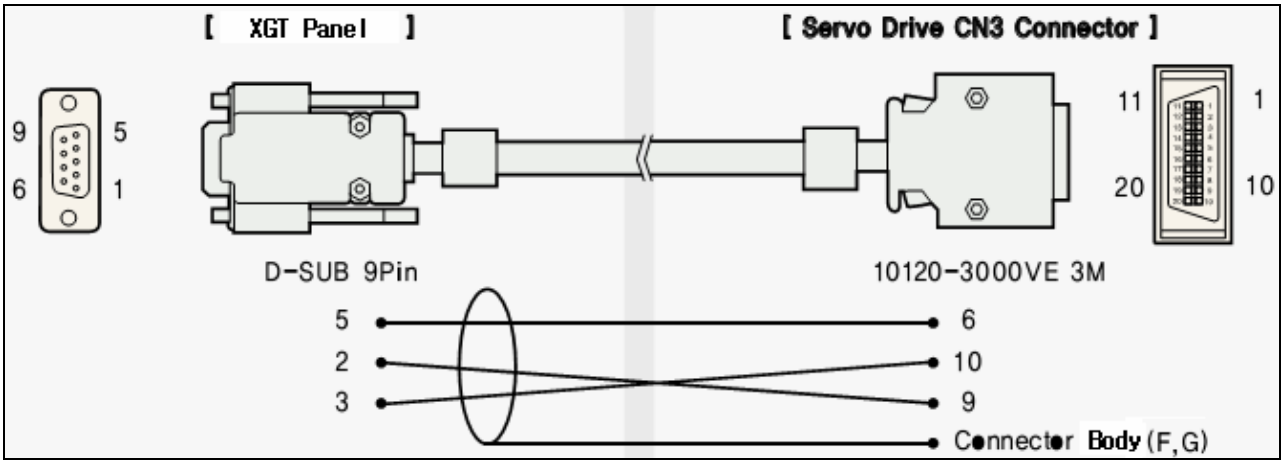

- In case of FDA6000 series

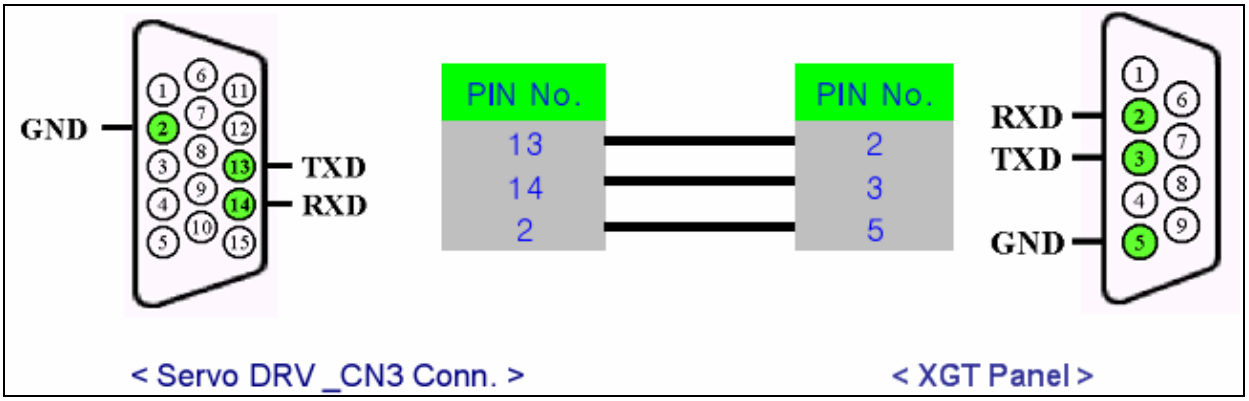

37.2.2 RS-485 connection

- In case of FDA7000 series

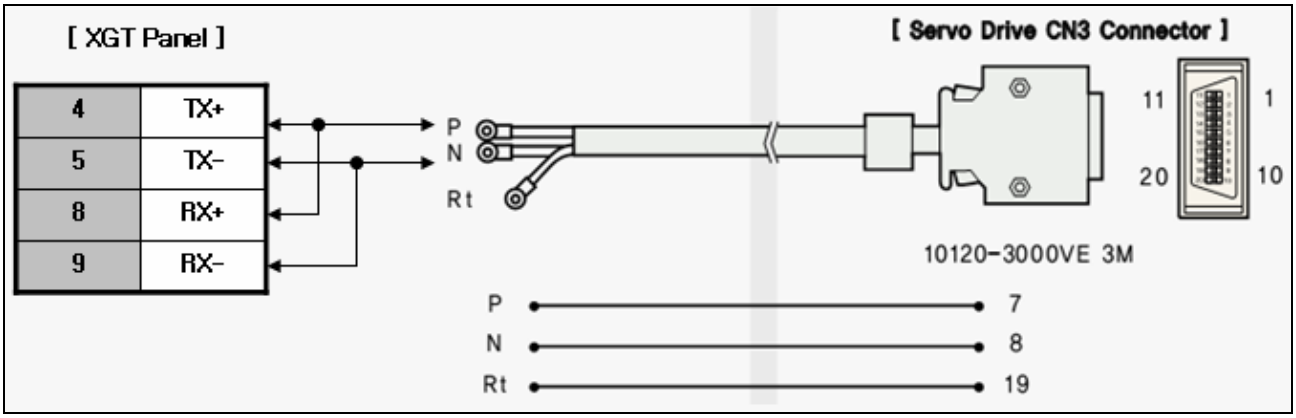

- In case of FDA6000 series

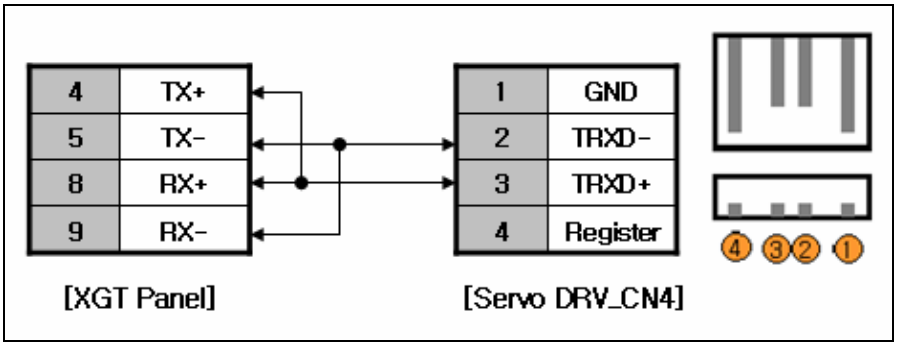

Tip

(1) Cautions

► Set the terminal switch of the XGT Panel
► When setting the terminal resistor of the FDA7000 series, short the N terminal and R t terminal.
► When setting the terminal resistor of the FDA6000 series, short no. 2 pin and no. 4 pin.

38.3 Communication Setting

38.3.1 Servo Configuration

(1) For communication settings, refer to the following table

Properties	Value
Data bit	8 bit
Parity	None
Stop bit	1
Speed	9600 ~ 57600

- In case of FDA7000 series

  Communication speed is determined by the parameter P01-15 of the servo
  Refer to the following table.

P01-15	RS-232C	RS485	P01-15	RS-232C	RS485
00	9600	9600	08	38400	9600
01	9600	19200	09	38400	19200
02	9600	38400	10	38400	38400
03	9600	57600	11	38400	57600
04	19200	9600	12	57600	9600
05	19200	19200	13	57600	19200
06	19200	38400	14	57600	38400
07	19200	57600	15	57600	57600

(2) ID setup of the servo is as follows.

- In case of FDA7000 series

  Servo ID is determined by the parameter P01-18 of the servo
  Range is 1~31.

- In case of FDA6000 series

  Servo ID is determined by the parameter P01-14 of the servo
  Range is 1~31.

38.3.2 XGT Panel Configuration

You can set the communication of the XGT Panel through XP-Builder.

(1) Controller setting
Select HIGEN Motors as the maker and HIGEN: Servo as the product

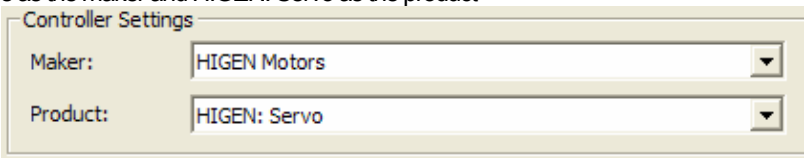

(2) Connection properties
For connection method, select RS-232C, RS-485 in accordance with user environment.

(3) Detailed connection option setting
Select Transmission speed in accordance with user environment

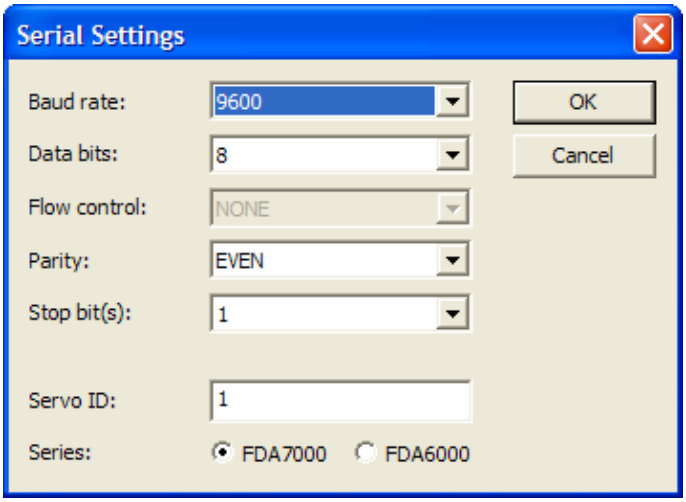

"Servo ID" means the ID of the partner servo. If servo ID is wrong, "Time out" will be displayed on the top of the XGT Panel screen. After setting, download to the XGT Panel.
Select the right series between FDA7000 and FDA6000

Tip

(1) Cautions
- ► In case of communication error, make sure parameters such as baud-rate, data bit are identical.
- ► When "Time out" appears on the top of screen, check the servo ID.

38.4 Available devices

Devices to be available for XGT Panel are as follows.

Area	Size	Bit point	Word data	Remark
4	2205 words	40000.0 ~ 42205.15	40000 ~ 42205	1) 2)
ALM_CUR	1 word	-	ALM_CUR0	Current alarm of servo 3)
ALM_GET_H	1 point	ALM_GET_H0	-	Reading alarm history of servo 4) 5)
ALM_CLR	1 point	ALM_CLR0	-	Deleting alarm history of servo
JOG_ON	1 point	JOG_ON0	-	Servo Jog On 4)
JOG_OFF	1 point	JOG_OFF0	-	Servo Jog Off 4)
JOG_CW	1 point	JOG_CW0	-	Servo Jog CCW 4)
JOG_CCW	1 point	JOG_CCW0	-	Servo Jog CW 4)
JOG_STOP	1 point	JOG_STOP0	-	Servo Jog stop 4)
JOG_CW_S	1 point	JOG_CW_S0	-	Servo Jog CCW Step 4) 6)
JOG_CCW_S	1 point	JOG_CCW_S0	-	Servo Jog CW Step 4) 6)
A_JOG_ON	1 point	A_JOG_ON0	-	Servo Auto Jog On 4) 6)
A_JOG_OFF	1 point	A_JOG_OFF0	-	Servo Auto Jog Off 4) 6)
SIM_ON	1 point	SIM_ON0	-	Servo Simulation On 4) 6)
SIM_OFF	1 point	SIM_OFF0	-	Servo Simulation Off 4) 6)

Note1) For “4” device area, refer to device’s manual
Note2) Size is 32bit. When using the objects such as numeric input, specify 32bit size
Note3) Read only device
Note4) Write only device
Note5) Alarm history from the servo is stored in the internal memory HW0~HW9.
Note6) Devices only used for positioning module of FDA6000series

Tip

(1) Cautions

► Please be sure not to be out of the range of device area.

► The range of device may be varied according to the CPU of the connected device. For more information, refer to devices’ manual.

Chapter 39 KDT Systems: CIMON PLC LOADER

KDT Systems' Cimon PLC Loader driver is provided from V1.23. If you use the version prior to V1.23, please use XP-Builder and XGT Panel software with V1.23 or higher from the homepage.

39.1 PLC List

XGT Panel is available for CPU Direct connection with Cimon PLC.

PLC name	CPU module	Connection type	Communication type	Connection module	Remarks
CIMON PLC	BP16M BP32M	CPU Direct	RS232C	CPU	-
	CM1-CP3A/B/P CM1-CP4A/B/C/D				-
	CM1-XP1A/R CM1-XP2A CM1-XP3A				-

Tip

(1) Terminology

► CPU Direct: This refers to conducting serial communication with the loader port of the CPU module.

(2) Programming tool

►CICON

(3) Cautions

► Please see users' manual of CIMON PLC for detailed supporting information. Also, supporting items may be changed by KDT Systems regardless of this product.

39.2 Wiring Diagram

Communication wiring diagram of the CIMON PLC LOADER is as follows.

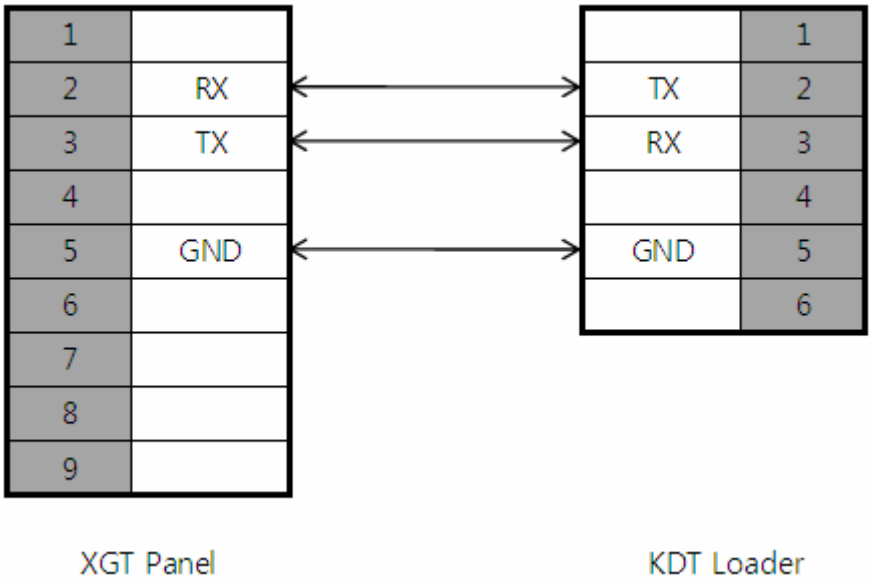

Communication parameter is fixed as follows.

Parameter	composition
Communication speed	38400
Parity Bit	NONE
Data Bit	8 Bits
Stop Bit	1 Bit
Communication method	RS-232C
Error detection	CRC16 (2 Bytes)
Protocol	HEX

Tip

(1) Cautions
► We recommend shield connection for stable communication.

39.3 Communication Setting

39.3.1 CIMON PLC LOADER configuration

The parameters of HANYOUNG NUX Temperature Controller communication of XGT Panel are configured from the XP-Builder. (See users' manual for XP-Builder)

(1) Configuration from XP-Builder

Press the [Detail Setting] button on the menu [Common]-[Project Property Setting]-[XGT Panel Settings] and change the properties

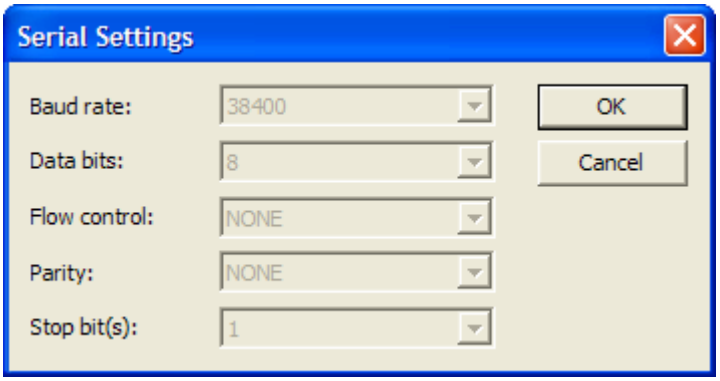

Tip

(1) Check out communication status

► If the status of communication with Cimon PLC Loader Series module cannot be verified, use Diagnostics function and PLC information function of XGT Panel to verify the communication status of XGT Panel. (See users' manual of XGT Panel)

(2) Cautions when configuring XP-Builder

► Configure as follows when generating project or configuring communication.

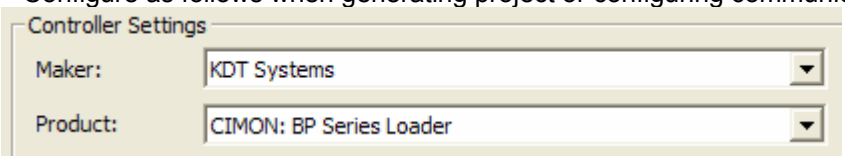

► Use the transmission waiting time flexibly according to the communication composition. (Recommended: 0ms)

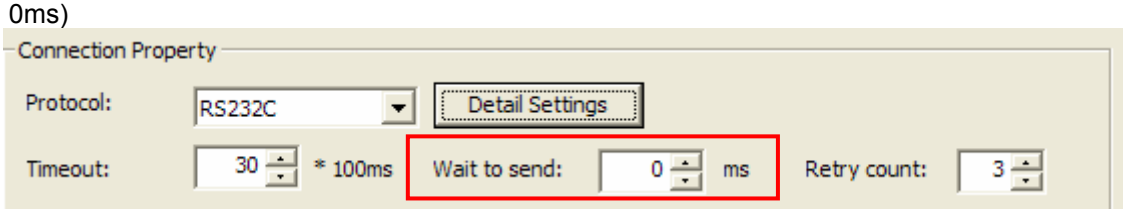

39.4 Available devices

Devices to be available for XGT Panel are as follows.

39.4.1 BP Series

Area	Size	Bit point	Word data	Read/Write	Remark
X	128 points	X0000 ~ X007F	X0000 ~ X0070	Read/Write	-
Y	128 points	Y0000 ~ Y007F	Y0000 ~ Y0070	Read/Write	-
M	4096 points	M0000 ~ M255F	M0000 ~ M2550	Read/Write	-
L	1024 points	L0000 ~ L063F	L0000 ~ L0630	Read/Write	-
K	1024 points	K0000 ~ K063F	K0000 ~ K0630	Read/Write	-
F	2048 points	F0000 ~ F127F	F0000 ~ F1270	Read	Status Device
T	256 points	T0000 ~ T0255	T0000 ~ T0255	Read/Write	
TC	256 points	-	TC0000 ~ TC0255	Read/Write	
TS	256 points	-	TS0000 ~ TS0255	Read/Write	
C	256 points	C0000 ~ C0255	C0000 ~ C0255	Read/Write	
CC	256 points	-	CC0000 ~ CC0255	Read/Write	
CS	256 points	-	CS0000 ~ CS0255	Read/Write	
S	100 points	S00.00 ~ S99.99	-	Read/Write	Step Device
D	5000Words	_	D0000 ~ D4999	Read/Write	-

39.4.2 CP Series

Area	Size	Bit point	Word data	Read/Write	Remark
X	4096 points	X0000 ~ X255F	X0000 ~ X2550	Read/Write	-
Y	4096 points	Y0000 ~ Y255F	Y0000 ~ Y2550	Read/Write	-
M	8192 points	M0000 ~ M511F	M0000 ~ M5110	Read/Write	-
L	2048 points	L0000 ~ L127F	L0000 ~ L1270	Read/Write	-
K	2048 points	K0000 ~ K127F	K0000 ~ K1270	Read/Write	-
F	2048 points	F0000 ~ F127F	F0000 ~ F1270	Read	Status Device
T	1024 points	T0000 ~ T1023	T0000 ~ T1023	Read/Write	
TC	1024 points	-	TC0000 ~ TC1023	Read/Write	
TS	1024 points	-	TS0000 ~ TS1023	Read/Write	

Area	Size	Bit point	Word data	Read/Write	Remark
C	1024 points	C0000 ~ C1023	C0000 ~ C1023	Read/Write	
CC	1024 points	-	CC0000 ~ CC1023	Read/Write	
CS	1024 points	-	CS0000 ~ CS1023	Read/Write	
S	100 points	S00.00 ~ S99.99	-	Read/Write	Step Device
D	10000Words	_	D0000 ~ D9999	Read/Write	-

39.4.3 XP Series

Area	Size	Bit point	Word data	Read/Write	Remark
X	8192 points	X0000 ~ X511F	X0000 ~ X5110	Read/Write	-
Y	8192 points	Y0000 ~ Y511F	Y0000 ~ Y5110	Read/Write	-
M	16000 points	M0000 ~ M999F	M0000 ~ M9990	Read/Write	-
L	16000 points	L0000 ~ L999F	L0000 ~ L9990	Read/Write	-
K	16000 points	K0000 ~ K999F	K0000 ~ K9990	Read/Write	-
F	2048 points	F0000 ~ F127F	F0000 ~ F1270	Read	Status Device
T	4096 points	T0000 ~ T4095	T0000 ~ T4095	Read/Write	
TC	4096 points	-	TC0000 ~ TC4095	Read/Write	
TS	4096 points	-	TS0000 ~ TS4095	Read/Write	
C	4096 points	C0000 ~ C4095	C0000 ~ C4095	Read/Write	
CC	4096 points	-	CC0000 ~ CC4095	Read/Write	
CS	4096 points	-	CS0000 ~ CS4095	Read/Write	
S	100 points	S00.00 ~ S99.99	-	Read/Write	Step Device
D	32000Words	_	D0000 ~ D31999	Read/Write	-

Tip

(1) Cautions

► Please see the manual for XP-Builder for how to use the device and details.

► Please be sure not to be out of the range of device area.

► The range of device may be varied according to the CPU module. For more information, refer to CIMON PLC manual.

Warranty

1. Warranty Period
The product you purchased will be guaranteed for 18 months from the date of manufacturing.

2. Scope of Warranty
Any trouble or defect occurring for the above-mentioned period will be partially replaced or repaired. However, please note the following cases will be excluded from the scope of warranty.

Any trouble attributable to unreasonable condition, environment or handling otherwise specified in the manual,
Any trouble attributable to others' products,
If the product is modified or repaired in any other place not designated by the company,
Due to unintended purposes
Owing to the reasons unexpected at the level of the contemporary science and technology when delivered.
Not attributable to the company; for instance, natural disasters or fire

3. Since the above warranty is limited to HMI unit only, make sure to use the product considering the safety for system configuration or applications.

Environmental Policy

LS Industrial Systems Co.,Ltd supports and observes the environmental policy as below.

Environmental Management

LS Industrial Systems considers the environmental preservation as the preferential management subject and every staff of LS Industrial Systems use the reasonable endeavors for the pleasurably environmental preservation of the earth.

About Disposal

LS Industrial Systems' PLC unit is designed to protect the environment. For the disposal, separate aluminum, iron and synthetic resin (cover) from the product as they are reusable.

LS values every single customers.

Quality and service come first at LSIS.

Always at your service, standing for our customers.

http://eng.lsis.biz

LS Industrial Systems

10310000857

■ **HEAD OFFICE**
LS tower, Hogye-dong, Dongan-gu, Anyang-si, Gyeonggi-do 1026-6,
Korea http://eng.lsis.biz
Tel : (82-2)2034-4870/Fax : 82-2-2034-4648 e-mail : cshwang@lsis.biz

■ **LS Industrial Systems Tokyo Office _ Tokyo, Japan**
Address: 16FL. Higashi-Kan. Akasaka Twin Tower 17-22,
Akasaka.Monato-ku Tokyo 107-8470. Japan
Tel : 81-3-3582-9128/Fax : 81-3-3582-2667 e-mail : jschuna@lsis.biz

■ **LS Industrial Systems(ME) FZE _ Dubai, U.A.E.**
Address : Jafza View Tower Lob 19, Room 205 Along Sheikh Zayed
Road Jebel Aali Free Zone Dubai, United Arab Emirates
Tel : 971-4-886-5360/Fax : 971-4-886-5361 e-mail : jungyongl@lsis.biz

■ **LS Industrial Systems Shanghai Office _ Shanghai, China**
Address : Room E-G. 12FL Hiamin Empire Plaza. No.726. West.
Yan'an Road Shanghai 200050. P.R. China e-mail : liyong@lsis.com.cn
Tel : 86-21-5237-9977(609)/Fax : 89-21-5237-7189

■ **LS Industrial Systems Beijing Office _ Beijing, China**
Address : B-Tower 17FL. Beijing Global Trade Center B/D. No. 36.
East BeisanHuan-Road. DongCheng-District. Beijing 100013. P.R. China
Tel : 86-10-5825-6027(666)/Fax : 86-10-5825-6028 e-mail : xunmj@lsis.com.cn

■ **LS Industrial Systems Guangzhou Office _ Guangzhou, China**
Address : Room 1403.14FL. New Poly Tower.
2 Zhongshan Liu Road.Guangzhou.P.R China
Tel : 86-20-8328-6754/Fax : 86-20-8326-6287 e-mail : chenxs@lsis.com.cn

■ **LS Industrial Systems Chengdu Office _ Chengdu, China**
Address : 12FL. Guodong Buiding. No.52 Jindun
Road Chengdu.610041. P.R. China
Tel : 86-28-8612-9151(9226)/Fax : 86-28-8612-9236 e-mail : comysb@lsis.biz

■ **LS Industrial Systems Qingdao Office _ Qingdao, China**
Address : YinHe Bldg. 402 Room No. 2P Shandong Road,
Qingdao-City,Shandong-province 266071, P.R. China
Tel : 86-532-8501-6068/Fax : 86-532-8501-6057 e-mail : wangzy@lsis.com.cn

■ **LS Industrial Systems Europe B.V. , Netherlands**
Address : 1st. Floor, Tupolevlaan 48, 1119NZ, Schiphol-Rijk, The Netherlands
Tel : +31 (0)20 654 1420/Fax : +31 (0)20 654 1429 e-mail : junshickp@lsis.biz

■ **Wuxi LS Industrial Systems Co., Ltd _ Wuxi, China**
Address : 102-A. National High & New Tech Industrial Development Area.
Wuxi. Jiangsu. 214028. P.R. China
Tel : 86-510-8534-6666/Fax : 86-510-8534-4078 e-mail : caidx@lsis.com.cn

■ **Dalian LS Industrial Systems Co., Ltd. _ Dalian, China**
Address : No. 15. Liaohexi 3-Road. Economic and Technical Development zone.
Dalian 116600. China
Tel : 86-411-273-7777/Fax : 86-411-8730-7560 e-mail : cuibx@lsis.com.cn

※ LS Industrial Systems constantly endeavors to improve its product so that information in this manual is subject to change without notice.

ⓒ LS Industrial Systems Co., Ltd 2010 All Rights Reserved.

2010. 3