Before using the product, thank you for purchasing SV-iP5A CANopen option board.

SAFETY PRECAUTIONS

- Always follow safety instructions to prevent accidents and potential hazards from occurring.
- Safety precautions are classified into “WARNING” and “CAUTION” and their meanings are as follows:

⚠ **WARNING**	Improper operation may result in serious personal injury or death.
⚠ **CAUTION**	Improper operation may result in slight to medium personal injury or property damage.

- The indicated illustrations on the product and in the manual have the following meanings.

⚠ Danger may be present. Read the message and follow the instructions carefully.

⚠ Particular attention should be paid because danger of an electric shock may be present.

- Keep operating instructions handy for quick reference.
- Read the operating instructions carefully to fully understand the functions of the SV-iP5A series and to use it properly.

⚠ CAUTION

- **Be cautious, when handling the CMOS components of the Option Board.**
  Static may lead to malfunctioning of the product.
- **Turn off the inverter power, when changing the communication cable.**
  Otherwise, you may damage the board or a communication error may occur.
- **Make sure to insert the Option Board connector to the inverter precisely.**
  Otherwise, you may damage the board or a communication error may occur.
- **Check the parameter unit before setting up the parameter.**
  Otherwise, a communication error may occur.

www.aksaotomasyon.com
AKSA OTOMASYON

Table of Contents

1. Introduction 3

2. Technical Data 3

3. Components 4

4. External Appearance and Installation 4

5. Network Connection 6

6. Diagnosis of the Option State and LED Indication 9

7. Related Parameter of CANopen Communication 13

8. CANopen Communication 23

9. CANopen Object Dictionary 34

www.aksaotomasyon.com
AKSA OTOMASYON

1. Introduction

1.1 Overview of CANopen

The CANopen is a Fieldbus using the CAN (Controller Area Network) specified by the CiA (CAN in Automation) Association. Currently, the CANopen is used in machine control, medical equipments, autos, and building automation.

1.2 Benefits

Inverters can be monitored and controlled by PLC sequence program or any master module.
Multiple inverters can be connected with a single communication line, saving the installation cost. Simple and clean wiring makes installation and maintenance works much easier and faster.
Various peripheral devices of PLC can be used to control inverters. Various systems including PCs can be linked for plant automation.

2. Technical Data

Power supply of CANopen communication card	Supplied from inverter.
Network Topology	Bus Topology
Baudrate	20kbps, 50kbps, 125kbps, 250kbps, 500kbps, 800kbps, 1Mbps
Max. number of Node	64 ea (Including Master) With 1 Master connected to network, the maximum number of inverter nodes is 63 (64-1).
Device Type	AC Drive
Supported Communication Type	Process Data Object (PDO), Service Data Object (SDO), Synchronization (Sync), Network Management (NMT)
Terminal Resistance	120 ohm 1/4W (Built-in)

www.aksaotomasyon.com
AKSA OTOMASYON

Available PDO	PDO1 (CiA 402 Drive and Motion Control device profile) PDO3 (LS Profile)
Vender Name	0h7D (LSIS)
PDO Mapping	Not available
Group Messaging	
LSS Supported	

3. Components

-. CANopen communication card: 1ea
-. User Manual in English: 1 ea
-. Brass bar: 3 ea

4. External Appearance and Installation

4.1 External appearance of communication card

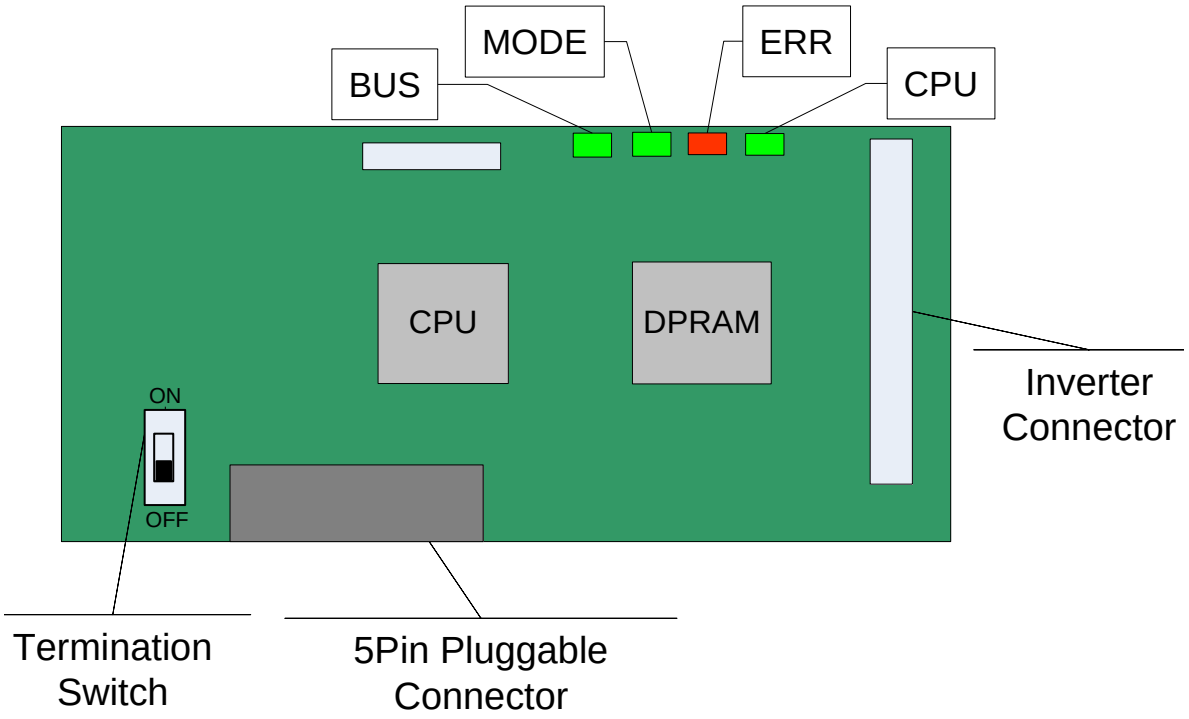

www.aksaotomasyon.com
AKSA OTOMASYON

4.2 Installation

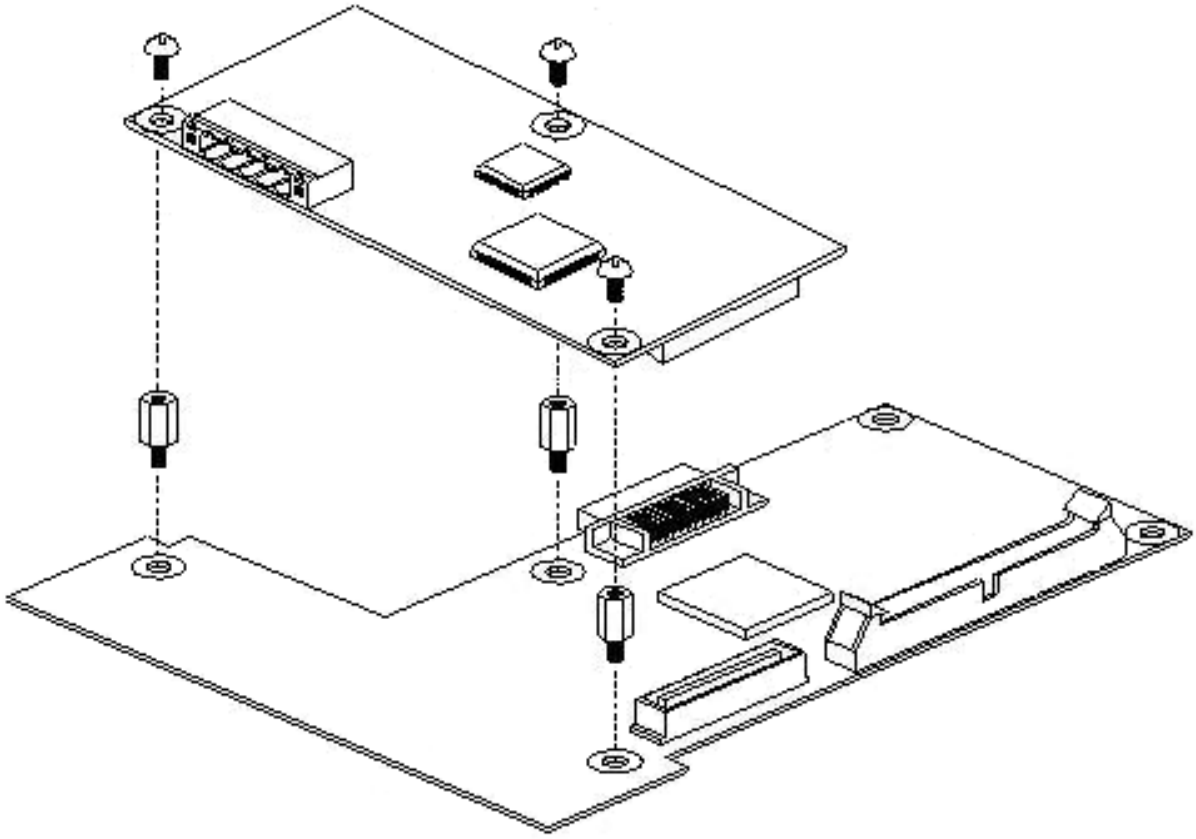

www.aksaotomasyon.com
AKSA OTOMASYON

5. Network Connection

5.1 Connection of connector for CANopen signal line

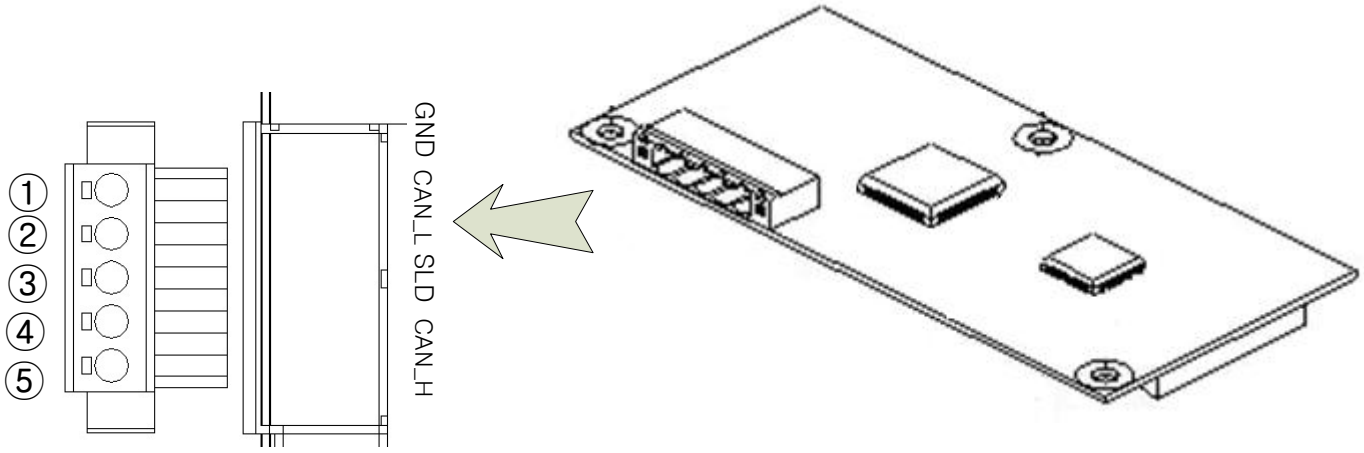

No.	Signal	Description
1	GND	CAN Ground
2	CAN_L	CAN_L Bus Line (Dominant Low)
3	SLD	CAN Shield
4	CAN_H	CAN_H Bus Line (Dominant High)
5	-	Reserved

※ The PHOENIX STLZ950/5F-5.08-H-GREEN is recommended for the 5 pin connector.

www.aksaotomasyon.com
AKSA OTOMASYON

5.2 Hardware installation

Warning) Configure the communication network after turn off the power of inverter.

The inverter and option card will be damaged when the option card is removed or mounted if the inverter is switched on.
Both the inverter and the option card will be damaged when the option card is removed or installed while the inverter is switched on. Please remove or install the option card after the charged voltage of condenser is totally discharged.

To reduce the noise, CANopen communication module at both ends of the network has to be terminated. Turn on the setting switch of terminal resistor on CANopen communication module. Terminal resistance 120 Ω 1/4W is connected between CAN_L and CAN_H after the terminal resistance is switched on.

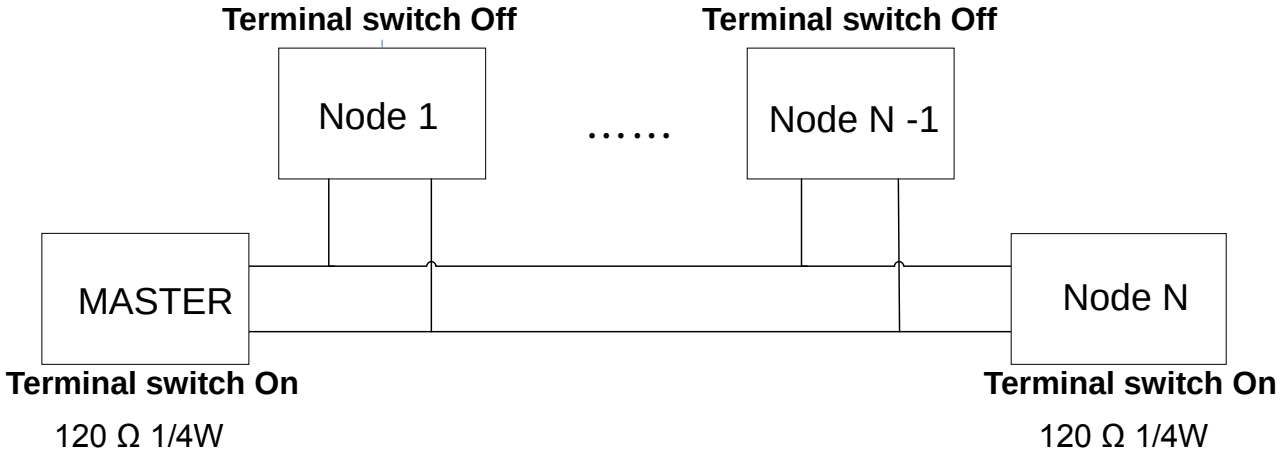

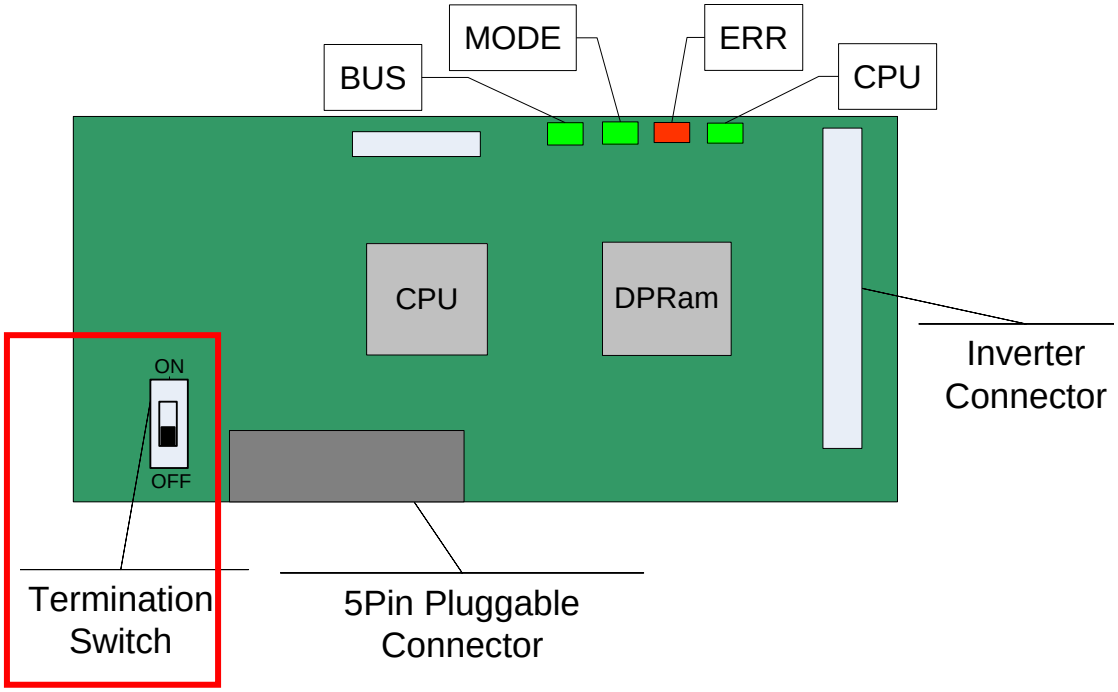

When the switch of terminal resistance is placed in lower side (Off)
→ Terminal resistor is not available.

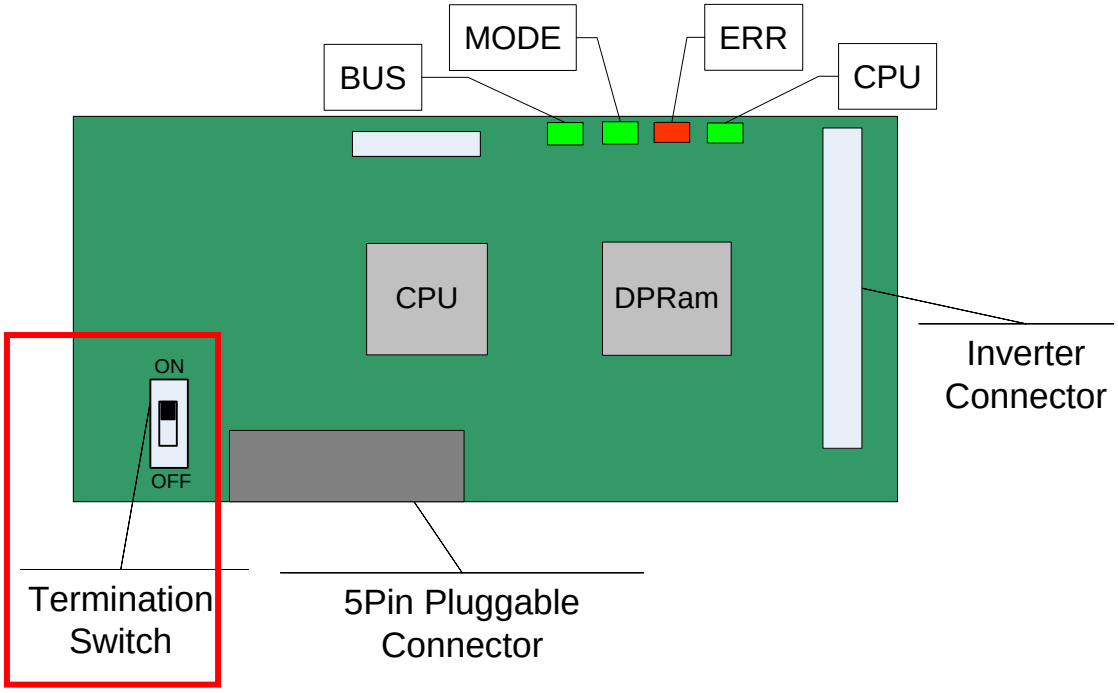

When the switch of terminal resistance is placed in upper side (Off)
→ Terminal resistor is available.

www.aksaotomasyon.com
AKSA OTOMASYON

5.3 Maximum communication range to Baudrate

In a network system, the total length of the network line is determined by the baud rate. The performance of the communication farther than this distance is not guaranteed.

Baudrate	Bus length
1M bps	25 m
800 kbps	50 m
500 kbps	100 m
250 kbps	250 m
125kbps	500 m
50 kbps	1,000 m
20 kbps	2,500 m

Note) iP5A CANopen communication card not supports 10 kbps.

6. Diagnosis of the Option State and LED Indication

6.1 LED Indication

The CANopen communication option has 4 LEDs.

LED	Description
CPU	When the Option card is energized and the CPU is in normal operation state, this LED is turned on and off at 1 second cycle – on for 500 ms and off for 500 ms.
ERR	This LED turns on if the Option parameters have been set up inappropriately, or the Internal CAN communication between the inverter and the CANopen is lost.
MODE	This LED turns on according to the state of the current NMT (Network Management).
BUS	This LED turns on or off according to the baud rate or profile set up, or communication state.

www.aksaotomasyon.com
AKSA OTOMASYON

6.2 Diagnosis of Option by LED Signal

LED	LED Signal	Option State	Possible Cause	Action
CPU	Kept Off	No Power	Failure in power supply (5V) to the CANopen communication card	Check inverter power supply. Check power supply to the CANopen communication card
	Blink at 1 sec intervals	Power On	5V power supplied	Normal state
ERR	Kept Off	No Error	Normal Option setting	Normal state
	Blinks synchronously with the CPU LED	Communication Error	Data communication between the inverter and Option is lost.	Turn the inverter power off, reinstall the Option card and turn the power on again.
	Blinks asynchronously with the CPU LED	Lost Command	PDO communication is lost.	Check that Network Line has been connected.
	Blinks at an interval twice as long as that of the CPU LED	Opt Parameter Setting	The parameters for the CANopen entered using keypad differ from those set up in the CANopen option card.	Run COMM Update (COM-67) to apply the CANopen parameter set up with keyboard. To maintain the CANopen parameters, set up with the previous values, or turn off and on the inverter

www.aksaotomasyon.com
AKSA OTOMASYON

LED	LED Signal	Option State	Possible Cause	Action
				power supply. Though the ERR LED may blink, the CANopen is driven with the previous set up values.
MODE	Kept Off	CANopen Not Initial	If the NODE LED has not been turned on yet after the CANopen Option has been energized, the CANopen has not been initialized yet and is not ready for CANopen communication.	Wait until lit. If not, set the COMM Update of the COM-67 to Yes.
	Kept Off	CANopen Stopped	f the NODE LED has been lit at least by once, the CANopen Master has issued a Stopped command.	Normal state
	Blinks synchronously with the CPU LED	CANopen Pre-Operational	CANopen communication available with the Master, but the connection with the Master has not been made yet.	Normal state
	Kept On	CANopen Operational	Master has been connected and communicating with the CANopen normally.	Normal state

www.aksaotomasyon.com
AKSA OTOMASYON

LED	LED Signal	Option State	Possible Cause	Action
BUS	Kept Off	CANopen Network Bus No Error	No problem in the CANopen Network.	Normal state
	Blinks synchro-nously with the CPU LED	CANopen Profile setting er-ror	The profile set up on the CANopen Master differs from that set up in the Option.	Check that the PDOs set up in the Master and Option are iden-tical.
	Blinks at an interval twice as long as that of the CPU LED	Not Con-nect	CANopen's baudrate is differ-ent.	Check that the baud rate of the CANopen set up in the Master and that in the Option are identical.
			Master has not been connected for communication yet.	Check that the Mas-ter has started com-munication.
			Network line has not been connected yet.	Check that Network Line has been con-nected.
	Keep On	Bus Off	CANopen Option is isolated from the network due to problem in the net-work.	Check the connec-tion with the Network Line. Check tightness of bolts and nuts. Turn the power on and off.

www.aksaotomasyon.com
AKSA OTOMASYON

7. Related Parameter of CANopen Communication

Code	Parameter Name	Initial Value	Range
DRV-03	Drive mode	Fx/Rx-1	Keypad Fx/Rx-1 Fx/Rx-2 Int. 485
DRV-04	Freq mode	Fx/Rx-1	KeyPad-1 Keypad-2 V1 V1S I V1+I Pulse Int. 485 Ext. PID
IO-92	COM Lost Cmd	None	None FreeRun Stop
IO-93	COM Time Out	1.0 sec	0.1 ~ 120.0 sec
COM-01	Opt B/D	-	-
COM-02	Opt mode	None	None Command Freq Cmd+Freq
COM-03	Opt Version	-	-
COM-31 ~COM-38	Output 1 ~ Output 8	-	0h0000 ~ 0hFFFF
COM-41 ~COM-48	Input 1 ~ Input 8	-	0h0000 ~ 0hFFFF
COM-61	Station ID	1	1 ~ 127
COM-62	Baudrate	0	0 (1 Mbps)

www.aksaotomasyon.com
AKSA OTOMASYON

Code	Parameter Name	Initial Value	Range
			1 (800 kbps) 2 (500 kbps) 3 (250 kbps) 4 (125 kbps) 5 (Reserved) 6 (50 kbps) 7 (20 kbps)
COM-63	Profile Sel	0	0 (CiA 402 Profile) (Frequency Converter PDO1) 1 (LS Profile)
COM-64	LED State	-	0000 ~ 1111 (Bit)
COM-65	Opt State	0	0 (Normal state) 1 ~ 2 (Communication card is damaged) 4 ~ 6 (Configuration error) 7 ~ 11 (State display at LS Profile PDO communication) 12 ~ 16 (State display at SDO communication) 17 (Communication command loss) 18 (N/A of PDO communication)
COM-66	RCV:ERR NUM	-	-
COM-67	Comm UpDate	No	No Yes

www.aksaotomasyon.com
AKSA OTOMASYON

(1) Display the name of communication card mounted on the inverter - OPT B/D (COM-01)

✓ It displays the name of communication card mounted on the inverter.

✓ If CANopen communication card is properly mounted on the inverter and there is nothing wrong with CANopen communication card, it will be displayed as “CANopen”.

(2) Set operation command source of the inverter

DRV-03	Drive mode
COM-02	Opt mode

✓ It sets the operation command source of the inverter.

✓ To set the operation/stop command of the inverter using CANopen communication, it requires setting COM-02 Opt mode to “Command” or “Cmd+Freq”.

(3) Set frequency command source of the inverter

DRV-04	Freq mode
COM -02	Opt mode

✓ It sets the frequency command source of the inverter.

✓ To set the command frequency of the inverter using CANopen communication, it requires setting COM-02 Opt mode to “Freq” or “Cmd+Freq”.

(4) How to run at communication command loss – COM Lost Cmd (I/O-92)

I/O-92	COM Lost Cmd
I/O-93	COM Time Out
COM -02	Opt mode

✓ **‘How to run at communication command loss**’ sets how to operate when it recognized communication command loss at the occurrence of PDO communication loss during ‘communication command loss determination time’.

✓

www.aksaotomasyon.com
AKSA OTOMASYON

✓ To use the communication command loss function, it requires setting COM-02 Opt mode to “Cmd’, “Freq”, and “Cmd+Freq”.

✓ When the operating method at the loss of communication command to “None”, the current operation is continued even if the communication command is lost. But if set to “FreeRun”, it starts FreeRun operation, and if set to “Stop”, it performs deceleration stop.

(5) Communication command loss determination time – COM Time Out (I/O-93)

I/O-92	COM Lost Cmd
I/O-93	COM Time Out
COM -02	Opt mode

✓ In the event of loss of PDO communication during ‘communication command loss determination time’ it is recognized as communication command loss.

✓ To use the communication command loss function, it requires setting COM-02 Opt mode to “Cmd’, “Freq”, and “Cmd+Freq”.

✓ In the event communication is resumed within ‘communication command loss determination time’ being restored to normal state, it does not recognize it as error.

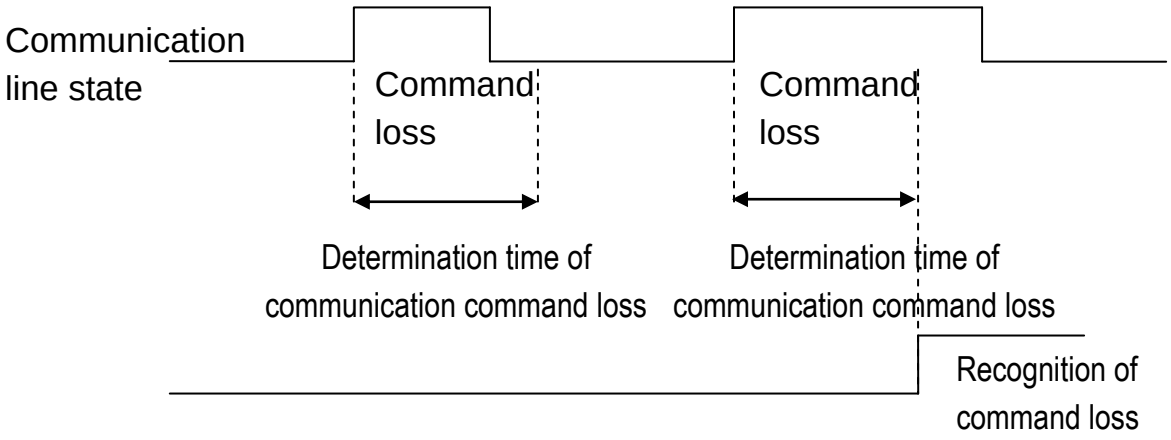

www.aksaotomasyon.com
AKSA OTOMASYON

(6) Display the version of communication card mounted on the inverter - Opt Version (COM-03)

✓ It displays the version of CANopen communication card mounted on the inverter.

(7) Set Station ID- Station ID (COM-61)

COM-61	Station ID
COM -67	Comm UpDate

✓ It is the parameter that sets the Station ID value of CANopen. Station Number can be set to 1 through127.

✓ Station ID may not be set in duplicate. Make sure the Station ID value is not set using the other Station ID of the network.

✓ When Station ID is changed, ERR LED of CANopen communication card will flicker in twice the interval of CPU LED. At this time, COM-65 Opt State value is displayed in 4 (Station ID value is changed).

✓ As CANopen-related parameter has been changed, perform Comm UpDate and then apply Station ID to CANopen communication card.

✓ Only when COM-67 Comm UpDate is set to Yes, it reflects the changed Station ID in CANopen communication card.

(8) Set baudrate – Baudrate (COM-62)

COM-62	Baudrate
COM -67	Comm UpDate

✓ It is the parameter that sets the baudrate of CANopen. Baudrate can be set to 0(1Mbps) through 7(10kbps).

✓ In the event of configuration of the network, baudrate of all the devices must be set equally without fail.

www.aksaotomasyon.com
AKSA OTOMASYON

0 : 1 Mbps
1 : 800 kbps
2 : 500 kbps
3 : 250 kbps
4 : 125 kbps
5 : Reserved
6 : 50kbps
7 : 20kbps

✓ When COM-62 Baudrate is changed, ERR LED of CANopen communication card will flicker in twice the interval of CPU LED. At this time, COM-65 Opt State value is displayed in 5 (baudrate value is changed).
✓ As CANopen-related parameter has been changed, perform Comm UpDate and then apply the baudrate to CANopen communication card without fail.
✓ Only when COM-67 Comm UpDate is set to Yes, it reflects the changed baudrate in CANopen communication card.

(9) Set Profile – Profile Sel (COM-63)

COM-63	Profile Sel
COM -67	Comm UpDate

✓ It is the parameter that sets PDO communication Profile.

0 : CiA 402 Drive and Motion Control Velocity Mode (Frequency Converter PDO1)

1 : LS Device Profile (PDO3)

✓ When COM-63 Profile Sel is changed, ERR LED of CANopen communication card will flicker in twice the interval of CPU LED. At this time, COM-65 Opt State value is displayed in 6 (Profile value is changed).
✓ As CANopen-related parameter has been changed, perform Comm UpDate and then apply Profile to CANopen communication card without fail.
✓ Only when COM-67 Comm UpDate is set to Yes, it reflects the changed Profile in CANopen communication card

www.aksaotomasyon.com
AKSA OTOMASYON

- ✓ In the event COM-63 Profile Sel is set to 0 (CiA 402 Profile (PDO1)) DRV-01 Acc. Time and DRV-02 Dec. Time values may not be set on the Keypad. Acceleration/Deceleration Time can be set with 0h6048(VI velocity acceleration), and 0h6049(VI velocity deceleration) only.
- ✓ In the event COM-63 Profile Sel is set to 1 (LS Device Profile (PDO3)), it does not support 0h6040 ~ 0h6048.

(10) Set LS Profile Output Address – Output 1~4 (COM-31~34)

COM-	Output 1~4
COM-63	Profile Sel

- ✓ Only when 1(LS Device Profile) is selected for COM-63 Profile Sel, COM-31~COM-34 Output 1~4 is shown.
- ✓ It designates four addresses (Output 1~4) and then transmits the parameter value to the master through TPDO3 (Transmit PDO).

Note) In the event 0(CiA 402 Profile) is selected for COM-63 Profile Sel, COM-31~COM-34 Output 1~4 is not shown.

(11) Set LS Profile Input Address – Input 1~4 (COM-41~44)

COM-	Input 1~4
COM-63	Profile Sel

- ✓ Only when 1(LS Device Profile) is selected for COM-63 Profile Sel, COM-41~COM-44 Input 1~4 is shown.
- ✓ It designates four addresses (Input 1~4) and then uses the data value transmitted from the master through RPDO3 (Receive PDO) for the inverter.

Note) In the event 0(CiA 402 Profile) is selected for COM-63 Profile Sel, COM-41~COM-44 Input 1~4 is not shown.

www.aksaotomasyon.com
AKSA OTOMASYON

(12) Display communication state LED state – LED State (COM-64)

- ✓ It is the parameter that indicates the flickering state of four LEDs (BUS, MODE, ERR, and CPU LED) mounted on the CANopen communication card.
- ✓ It displays LED state in the order of BUS, MODE, ERR, and CPU LED from right to left on the Keypad.

COM-64 LED State E.g.) 1101

LED Type	BUS (Green)	MODE (Green)	ERR (Red)	CPU (Green)
Keypad value	1	1	0	1
Meaning	ON	ON	OFF	ON

(13) Display communication card state – Opt State (COM-65)

- ✓ It is the parameter that displays the state of CANopen communication card.
- ✓ In the event the following state occurs in duplicate in the communication card, it displays the value of the state with priority at COM-65 Opt State.

Value	Meaning	Action
0	Normal state	None
1	Termination of communication between CANopen communication card and the inverter	Defect of CANopen communication card; Replace CANopen communication card.
2		
3		
4	Change in Station ID(COM-61) .	Set COM-67 Comm UpDate to Yes and then reflect CANopen parameter in the communication card.
5	Change in baudrate (COM-62) value.	
6	Change in Profile (COM-63) value.	

www.aksaotomasyon.com
AKSA OTOMASYON

Value	Meaning	Action
7	During the use of LS Profile, the address not existing in the inverter among COM-31 ~ 34 Output 1~4 is input	Input proper address in COM-31 ~ 34 Output 1~4.
8	During the use of LS Profile, the address not existing in the inverter among COM-41 ~ 44 Input 1~4 is input.	Input proper address in COM-41 ~ 44 Input 1~4.
9	During the use of LS Profile, It exceeds the normal range of data intended to be written by PLC out of COM-41 ~ 44 Input 1~4	Set the data to be written by PLC to the value within a normal range.
10	During the use of LS Profile, Executes write operation in the parameters prohibited during the operation of inverter	Write the value with the inverter stopped.
11	During the use of LS Profile, Inverter address value for reading only is set in COM-41~44 Input 1~4	Input proper address in COM-31 ~ 34 Output 1~4.
12	Executes Read in the address that does not exist in the inverter when reading from SDO	Set proper SDO Read address.
13	During writing in SDO, executes Write in the address that does not exist in the inverter	Set proper SDO Write address.
14	During writing in SDO, writes the data value that exceeds the normal range	Set proper SDO Write data value.
15	Reserved	-

www.aksaotomasyon.com
AKSA OTOMASYON

Value	Meaning	Action
16	During writing in SDO, Writes in the parameter for reading only	Set proper SDO Write address.
	During writing in SDO, Writes in SDO in the state that the current inverter is under operation	Stop the inverter and then execute SDO Write.
17	Occurrence of communication command loss	Make sure the communication cable is properly connected.
18	Fails to execute PDO communication	In the event Opt State shows 18 during PDO communication make sure the communication cable is properly connected.
		During SDO communication, if Opt State shows 18, it is the normal state.

(14) Display the Number of Received and Error Frames – RCV:ERR Num(COM-66)

- ✓ It displays the number of received communication frames and the error frames.
- ✓ In the event of Comm UpDate it becomes initialized.

(15) Comm Update (COM-94)

COM-	Station ID
COM-	Baudrate
COM-	Profile Sel
COM-	Comm UpDate

- ✓ The values of Station ID, baudrate and Profile must be modified and Comm UpDate must be set to Yes without fail.
- ✓ Only when Comm UpDate is executed, the modified Station ID, baudrate, and Profile are reflected in CANopen communication card.

www.aksaotomasyon.com
AKSA OTOMASYON

8. CANopen Communication

8.1 CAN-ID Frame

✓ IP5A CANopen supports CAN2.0A (Standard) only.
✓ As it is CAN2.0A, ID consists of 11Bit.
✓ Below is the configuration of ID.

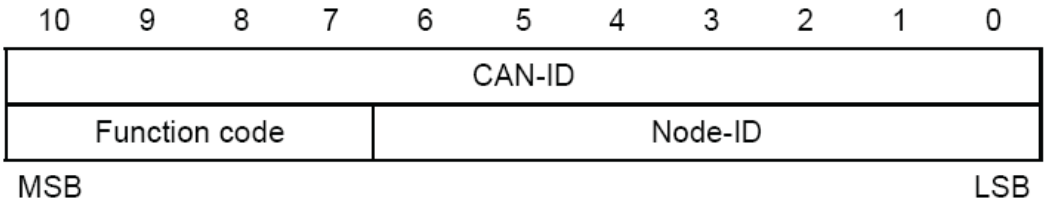

✓ Below is Broadcast Function code.

COB	Function code	Resulting CAN-IDs
NMT	0000b	0 (0h000)
SYNC	0001b	128 (0h080)
TIME	0010b	256 (0h100)

Note) As COB - Communication Object, it is an integral part of CAN Message Frame showing the unit transmitted by CAN Network.

✓Below is the Function code for Peer to peer use

COB	Function code	Resulting CAN-IDs
EMCY	0001b	129(0h81) ~ 255(0hFF)
PDO1 (tx)	0011b	385(0h181) ~ 511(0h1FF)
PDO1 (rx)	0100b	513(0h201) ~ 639(0h27F)
PDO3 (tx)	0111b	897(0h381) ~ 1023(0h3FF)
PDO3 (tx)	1000b	1025(0h401) ~ 1151(0h47F)
SDO (tx)	1011b	1409(0h581) ~ 1535(0h5FF)
SDO (rx)	1100b	1537(0h601) ~ 1663(0h67F)
Node Guarding	1110b	1793(0h701) ~ 1919(0h77F)

www.aksaotomasyon.com
AKSA OTOMASYON

- ✓ Data is transmitted through a variety of COBs (Communication Object) in the CANopen data Frame.
- ✓ Process Data Object (PDO) is used to transmit the data requiring real time transmission (Real time data), while Service Data Object (SDO) is used to transmit the data not requiring real time transmission.

8.2 Network Configuration

8.2.1 Error Control Protocol

- ✓ Error Control Protocol is the Protocol that checks if the CANopen devices connected with the Network are properly working.
- ✓ Error Control Protocol consists of two types; Node/Life Guarding Protocol and Heartbeat Protocol.

➢ **Node/Life Guarding**

- ✓ Node/Life Guarding is used to check if CANopen Device is properly working.
- ✓ Master transmits RTR Frame to the NMT Slave in a routine manner (Preset Node Guard Time). Upon receipt of RTR Frame, the Slave device responds RTR Frame that it works properly together with its own NMT State.
- ✓ Below is NMT State Table.

NMT STATE	Name
4	Prepared
5	Operational
127	Pre-operational

- ✓ In the event it fails to transmit RTR Frame until the elapse of Master Node Life Time or the Slave dose not receive any response on RTR Frame from the Master until the elapse of Node Life Time, there occurs Guard Error. In the case of iP5A CANopen communication card, CANopen NMT State becomes Pre-operational.

www.aksaotomasyon.com
AKSA OTOMASYON

➢ **Heartbeat Protocol**

✓ When Error Control Protocol is set to Heartbeat, it sends its own MNT State information at every time set in the Heartbeat Producer. In case of Heartbeat Consumer, in the event Heartbeat Producer fails to send Heartbeat during the time preset, Heartbeat Event takes place in the Consumer.

✓ iP5A CANopen informs the Consumers of the current NMT State at every time set as the Producer.

8.2.2 CANopen EDS File

✓ CANopen EDS File is a Test File used to control the parameters of SV-iP5A inverter as the Master program of CANopen Manager, etc.

✓ EDS file can be downloaded from our homepage (http://www.lsis.biz).

✓ Below is the type of EDS FILE.

SV-iP5A_xxxx_CANopen.eds (xxxx version information)

E.g.) SV-iP5A_0005_CANopen.eds (iP5A V0.5 EDS File)

✓ SV-iP5A_0005_CANopen.eds is inserted in the folder for EDS FILE in the Master Configuration program.

www.aksaotomasyon.com

AKSA OTOMASYON

8.3 NMT(Network Management) State Machine

- ✓ It is the Command used for Master to control the state of Slave devices in the Network.
- ✓ NMT Slave performs NMT Slave state machine.
- ✓ Only when it becomes Pre-operational state, Configuration of the devices is enabled.
- ✓ Below are NMT State Diagram of CANopen devices.

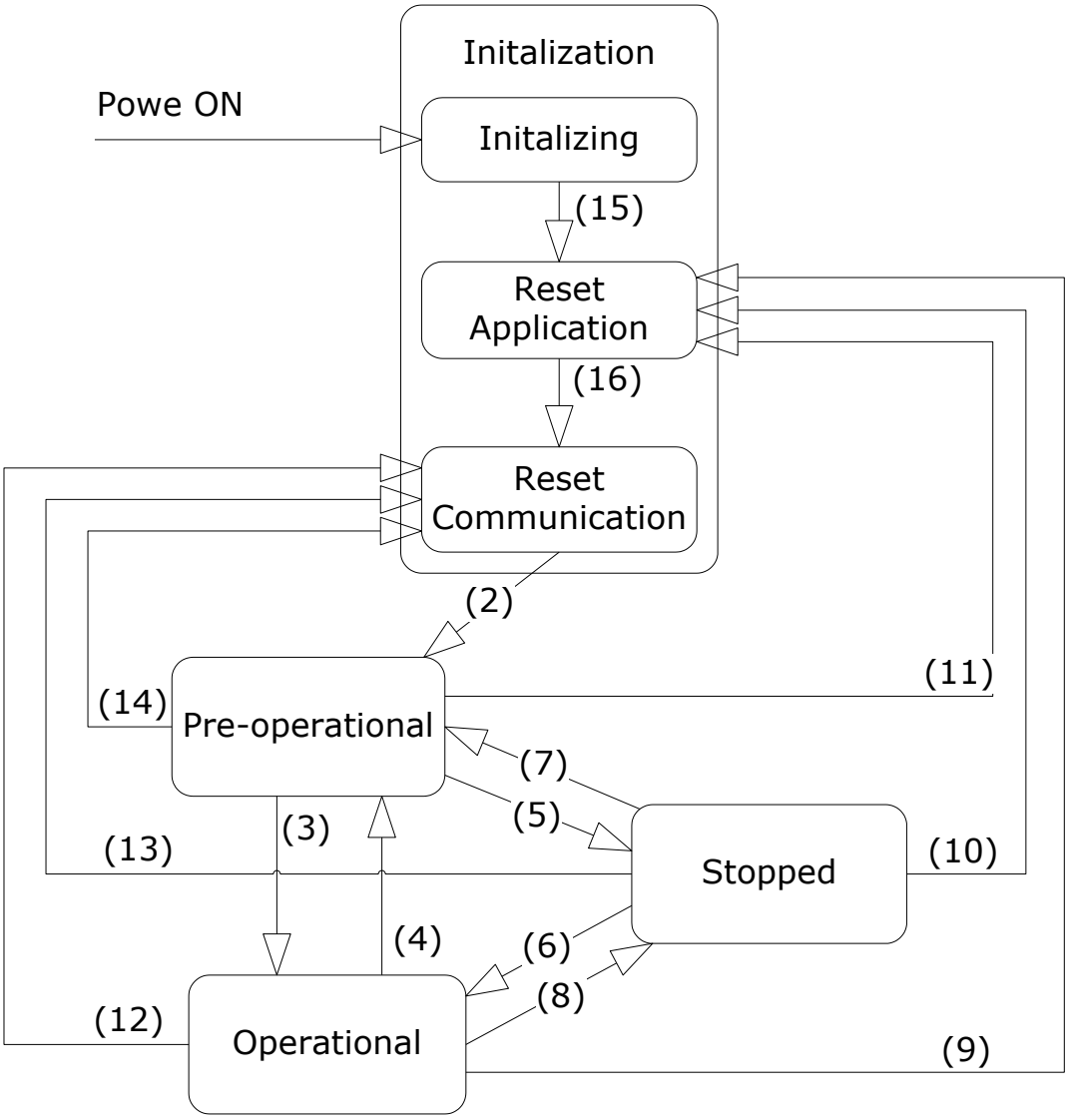

www.aksaotomasyon.com
AKSA OTOMASYON

NMT State Transformation	Transformation Condition
(1)	When power is applied, the state automatically becomes initialized.
(2)	When NMT state initialization is completed, it automatically becomes Pre-operational state.
(3)	When Start_Remote_Node Command is received from NMT Master, it becomes Operational state.
(4),(7)	When Enter_Pre-operational_State Command is received from NMT master, it becomes Pre-operational state.
(5),(8)	When Stop_Remote_Node Command is received from NMT Master, it becomes Stopped state
(9),(10),(11)	When Reset Node Command is received from NMT Master, it becomes Reset Application state
(12),(13),(14)	When Reset Communication Command is received from NMT Master, it becomes Reset Communication state.
(15)	When NMT Sub-state Initializing is completed, it automatically becomes NMT Sub-state Reset Application state.
(16)	When NMT Sub-state Reset is completed, it automatically becomes NMT Sub-state Reset Communication state.

Note)

NMT Command	Name
001	Start_Remote_Node
002	Stop_Remote_Node
128	Enter_Pre-operational State
129	Reset_Node
130	Reset_Communication

www.aksaotomasyon.com
AKSA OTOMASYON

- **Initialization**
  - ✓ Once power is applied to CANopen device or Reset is performed, it automatically becomes Initialization state. When Initialization is completed, it becomes Pre-operational state.
  - ✓ Initialization state is divided into 3 states as below.

Sub-State	Description
Initializing	Step that performs Initialization after Power-On or H/W Reset as the first communication card state
Reset Application	It falls under the case NMT requests Node Reset. At this time, it executes Initialization for the Profile.
Reset Communication	It falls under the case NMT requests Reset of Communication. At this time, it informs the Master of Boot-Up through NMT frame, and then automatically becomes Pre-operational state.

- **Pre-operational**
  - ✓ Prior to PDO communication, Master transmits the information on PDO to the Slave through SDO or read through the necessary data. This is the step of preparing PDO communication before starting PDO communication through SDO.
  - ✓ In this state, when Start_Remote_Node Command is received from NMT Master, it becomes Operational state.

- **Operational**
  - ✓ Once it becomes Operational state, all the Communication Objects get Active enabling SDO communication, Synchronization, Error Control, and Emcy Message as well as PCO communication.
  - ✓ In this state when Stop_Remote_Node Command is received from NMT Master, it becomes Stopped state.

www.aksaotomasyon.com
AKSA OTOMASYON

- **Stopped**
  - ✓ When it becomes Stopped state, all the communications other than NMT and Heart for Error Control are stopped.
  - ✓ When Enter_Pre-operational_State Command is received from NMT Master in this state, it becomes Pre-operational state..

Communication enabled frame by NMT States

	Pre-operational	Operational	Stopped
PDO	X	O	X
SDO	O	O	X
SYNC	O	O	X
TIME	O	O	X
EMCY	O	O	X
Node Control Error Control	O	O	O

www.aksaotomasyon.com
AKSA OTOMASYON

8.4 Finite State Automation (FAS)

✓It is the state of communication card adopted when using CiA 402.

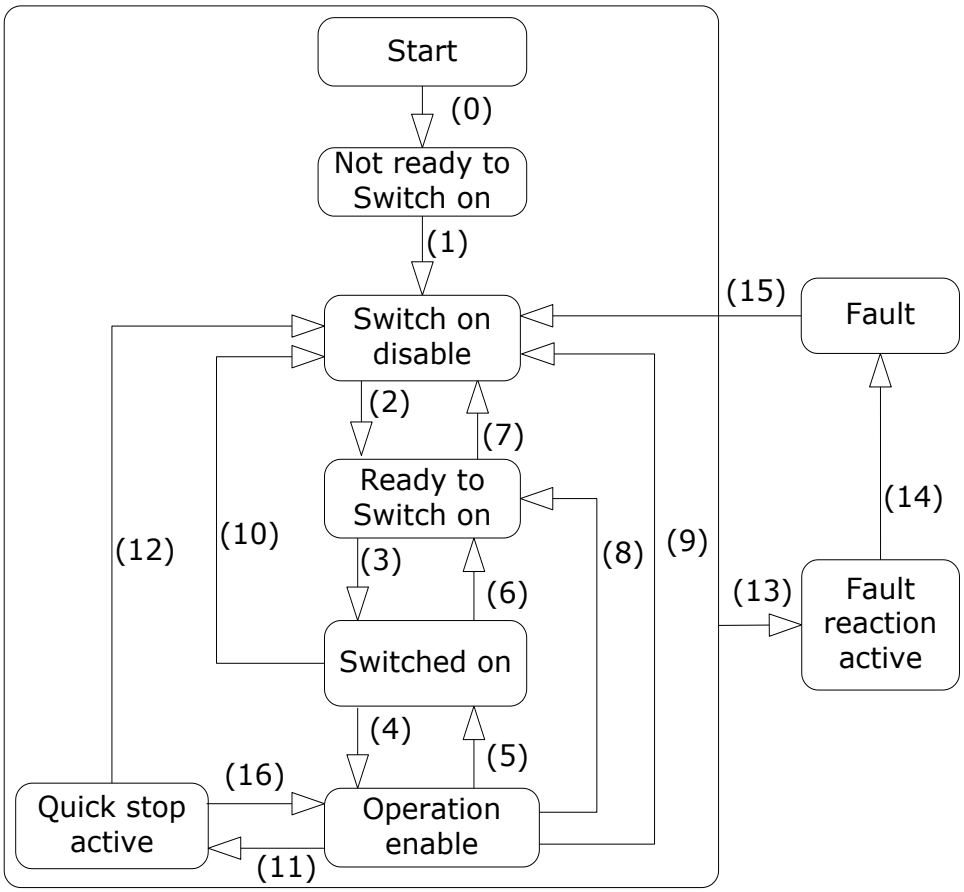

State	Description
Not ready to Switch on	State that initializes hardware of CANopen and Stack
Switch on disable	State that the current Option state cannot Switch On
Ready to switch on	State that Switch on is always enabled
Switched on	State that Operation is always enabled State that Run Command is always enabled
Operation enable	State that Motor is being driven
Quick stop active	State that stops the motor or the state motor is stopped

www.aksaotomasyon.com
AKSA OTOMASYON

✓Following table illustrates the operation of the inverter following the state transitions.

No	Event	Action
0	Automatic transformation	Self-test & Variable Initialization
1	Automatic transformation	CANopen communicable
2	Transformation into Operation Mode	None
3	Receive Switch on Command	None
4	Receive Enable Operation Command	Motor Drive
5	Receive Disable Operation Command	Maintain Current Inverter State
6	Receive Shut Down Command	In the state that the motor is being driven, execute Free run stop
7	Receive Disable Voltage Command	None
8	Shut Down Command Receive	Execute Free run stop
9	Receive Disable Voltage Command	Execute Free run stop
10	Receive Disable Voltage Command Receive Quick Stop Command	Execute Free run stop
11	Receive Quick Stop Command	Reduce speed to Deceleration Time set to Quick Stop
12	Receive Disable voltage Command	Execute Free run stop
13	Trip occurs in the inverter	Execute Trip Sequence
14	Automatic transformation	Execute Trip Sequence

www.aksaotomasyon.com
AKSA OTOMASYON

No	Event	Action
15	Receive Reset Command, Release Trip	Transform to Switch on disable state
16	Receive Enable operation Command	Drive the motor again

8.5 Process Data Objects (PDO)

✓ PDO communication is used to send and receive the data requiring real time transmission (Real Time data). It is transmitted without overhead or confirmation of the Protocol (Index, Sub-index, Data), i.e. used for IO communication.

✓ PDO is divided into two types depending on the transmission direction; RPDO (Receive PDO) where data is transmitted from communication master, and TPDO (Transmit PDO) where data is transmitted to communication Master.

✓ iP5A CANopen is embodied for PDO for Frequency converter use out of CiA 402 Drive and Motion Control, which provides PDO1 and PDO3 only.

➢ PDO Transmission Mode

✓ To keep the communication device in Synchronous state, SYNC Master transmits Synchronous Object.

✓ Below is the Synchronous and Asynchronous Transmission Mode.

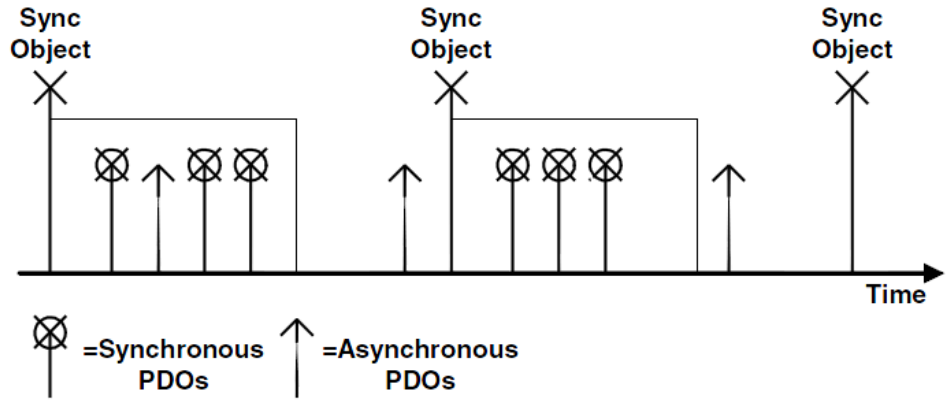

Synchronous and Asynchronous Transmission

www.aksaotomasyon.com
AKSA OTOMASYON

- **Synchronous Transmission**
  Transmits PDO by SYNC frames. Interval between two SYNC Objects becomes the interval of communication.

- **Asynchronous (Event-driven) Transmission**
  Transmits PDO by specific Event.

➢ **Triggering Modes**

✓ Triggering Mode is the Event that determines when to send TPDO, which consists of the following three types of Triggering Mode;

- **Event- and timer-driven**
  Transmits TPDO frame at every time preset automatically.

- **Remotely Transmission Request (RTR)**
  Transmits TPDO frame when receiving the RTR (Remote Transmission Request) frame that requests PDO.
- **Synchronously triggered**
  Transmits TPDO frame when receiving as many SYNC frames as set.

8.6 Service Data Object(SDO) communication

✓ SDO communication is used for Peer to Peer communication of the data not requiring real time transmission between two CANopen Devices (ex; setting the parameter value.

✓ It is possible to read/write all the Objects in the Object Directory using SDO communication. It accesses the Object by the combination of Object Index and Sub Index.

www.aksaotomasyon.com
AKSA OTOMASYON

9. CANopen Object Dictionary

9.1 Communication Profile Domain

➢ **Device type (0h1000)**

✓ It is SDO showing the Device Type of communication card.

Index	0h1000
Sub-index	0h00
Data type	UNSIGNED32
Access	RO (Read only)
Data	0h00010192 Consisting of two words; Upper words indicate Frequency Converter(0h01) while Lower words indicates Drive Profile DSP402(0h0192)

➢ **Error register (0h1001)**

✓ It is the information on the Error of communication card.

Index	0h1001	
Sub-index	0h00	
Data type	UNSIGNED8	
Access	RO (Read only)	
Data	Bit	Information
	0	Generic trip(Generic error)
	1	Current-related trip(Current error)
	2	Voltage-related trip(Voltage error)
	3	Temperature-related trip(Temperature error)
	4	Reserved
	5	Reserved
	6	Reserved (always 0b)
	7	User-defined trip(Manufacturer-specific)

www.aksaotomasyon.com
AKSA OTOMASYON

Note) Below is the table on Inverter Trip that falls under Error Register Data.

Error Register Data	inverter Trip
Generic trip (Generic error)	HW Diag Fuse Open External Trip BX
Current-related trip (Current error)	Inverter Overload Trip Over Current1 Ground Trip Over Current2
Voltage-related trip (Voltage error)	In Phase Open Over Voltage Low Voltage
Temperature-related trip (Temperature error)	NTC Open Over Heat
User-defined trip (Manufacturer-specific)	Ethermal Trip Out Phase Open Over Load Under Load Thermal Trip Pre PID Fail Lost Command

www.aksaotomasyon.com
AKSA OTOMASYON

➢ Pre-defined error field (0h1003)

✓ It is the information on the current Emergency.

Index	0h1003
Data type	UNSIGNED32
Object code	Object code

Sub-index	0h00	
Data type	UNSIGNED8	
Description	Number of Errors that occurred	
Access	RW (Read/Write)	
Data	Read	Number of Emergency Errors that currently exist
	Write	When writing 0, all the Emergencies are Reset

Sub-index	0h01
Data type	UNSIGNED32
Description	Information of Emergency that occurred most recently
Access	RO (Read only)

	Value	Description	Value	Description
Data	0h0000	None	0h7120	No Motor Trip
	0h1000	UNDEFINED	0h8401	Speed Dev Trip
	0h2220	Inverter OLT	0h8402	OverSpeed
	0h2310	OverCurrent1	0h9001	External Trip
	0h2330	Ground Trip	0h9002	BX
	0h2340	OverCurrent2	0hFF01	Ethermal
	0h3130	In Phase Open	0hFF03	Out Phase Open
	0h3210	Over Voltage	0hFF04	Over Load
	0h3220	Low Voltage	0hFF05	Under Load
	0h4000	NTC Open	0hFF06	Thermal Trip
	0h4310	Over Heat	0hFF07	Pre PID Fail
	0h5000	HWDiag	0hFF0A	Lost Command
	0h5450	Fuse Open		

www.aksaotomasyon.com
AKSA OTOMASYON

➢ COB-ID SYNC message (0h1005)

✓ SDO that reads and writes the information on CAN ID of the Device (Master) that sends SYNC Message.

✓ SYNC Message controls Action of PDO Transmission Type of which is Synchronous.

✓ Bit type is as below.

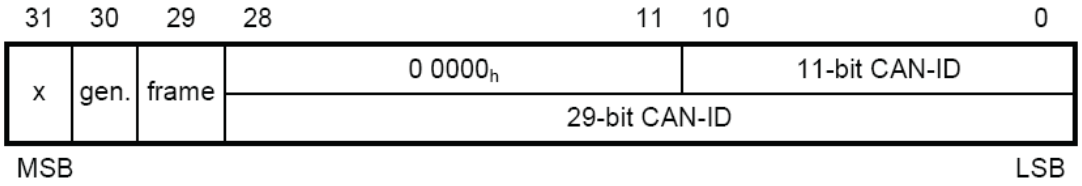

✓ iP5A CANopen communication card only receives but does not generate SYNC. In addition, it supports ID for Standard only. So the values of gen and frame must be all 0.

Index	0h1005	
Data type	UNSIGNED32	
Sub-index	0h00	
Access	RW (READ/WRITE)	
Data	Read	COB-ID of SYNC currently set
	Write	Sets COB-ID of SYNC

➢ Manufacturer device name

✓ Information on the name of CANopen communication card.

Index	0h1008
Sub-index	0h00
Data type	VISIBLE_STRING (String)
Access	RO
Data	IP5A CANopen

➢ Manufacturer hardware version

✓ Version information on the hardware of communication card.

Index	0h1009
Sub-index	0h00
Data type	VISIBLE_STRING (String)
Access	RO (Read only)
Data	CANopen x.xx (E.g. : CANopen 1.00)

➢ Manufacturer software version (0h100A)

✓ Version information on the software of communication card.

Index	0h100A
Sub-index	0h00
Data type	VISIBLE_STRING (String)
Access	RO (Read only)
Data	CANopen x.xx (E.g.: CANopen 1.00)

➢ Guard time (0h100C)

✓ It is SDO that sets Guard time when using Node/Life Guarding Protocol out of Error Control Protocol.

Index	0h100C
Sub-index	0h00
Data type	UNSIGNED16
Access	RW (READ/WRITE)
Data	‘Guard Time’ (Unit: msec)

www.aksaotomasyon.com
AKSA OTOMASYON

- **Life time factor (0h100D)**

✓SDO that sets the Life time factor when using Node/Life Guarding Protocol out of Error Control Protocol

Index	0h100D
Sub-index	0h00
Data type	UNSIGNED8
Access	RW (READ/WRITE)
Data	Factor for calculating Node Life Time. The value when not using Node/Life Guarding Protocol is 0.

- **COB-ID EMCY (0h1014)**

✓SDO that sets CAN-ID of Emergency Frame. It is prohibited from setting in IP5A CANopen but allowed for reading only.

Index	0h1014
Sub-index	0h00
Data type	UNSIGNED32
Access	RO (Read only)
Data	$NODEID+0h80 ($Node ID is the Station ID set in the current communication card)

- **Producer heartbeat time (0h1017)**

✓SDO that shows the Heartbeat transmitting time.

Index	0h1017
Sub-index	0h00
Data type	UNSIGNED16
Access	RW (READ / WRITE)
Data	Sets the time in Smsec unit.

www.aksaotomasyon.com
AKSA OTOMASYON

➢ **Receive PDO1 Parameter (0h1400)**

Index	Sub-index	Name	Type	Property
0h1400	0	RPDO1 Parameter	U8	RO
	1	COB ID	U32	RW
	2	Transmission Type	U8	RW

✓ COB-ID is the eigen CAN-ID value of PDO.
✓ Below are the values of Transmission Type.

Transmission Type Value	Meaning
0	Transmits RPDO at the occurrence of SYNC, and transmits RPDO only when there is change between previous and current RPDO data. (COS : Change of state)
1 ~ 240	Transmits TPDO when SYNC is received in such number as set.
252 ~ 253	Doesn't support.
255	Transmits RPDO by Asynchronous (Event Trigger) Transmission.

➢ **Receive PDO3 Parameter (0h1402)**

Index	Sub-index	Name	Type	Property
0h1402	0	RPDO1 Parameter	U8	RO
	1	COB ID	U32	RW
	2	Transmission Type	U8	RW

✓ COB-ID is the eigen CAN-ID value of PDO.

www.aksaotomasyon.com
AKSA OTOMASYON

➢ **Receive PDO1 Mapping (0h1600)**

Index	Sub-index	Name	Type	Property
0h1600	1	PDO Mapping Entry1 **0h6040 Controlword**	U32	RO
	2	PDO Mapping Entry2 **0h6042 VI Target Velocity**	U32	RO

➢ **Receive PDO3 Mapping (0h1602)**

Index	Sub-index	Name	Type	Property
0h1602	1	Input1 0h3010	U32	RW
	2	Input2 0h3011	U32	RW
	3	Input3 0h3012	U32	RW
	4	Input4 0h3013	U32	RW

✓ Input 1~4 write the value in the parameter of communication address set in COM-31~34 Output 1~4.

➢ **Transmit PDO1 Parameter (0h1800)**

Index	Sub-index	Name	Type	Property
0h1800	0	TPDO1 Parameter	U8	RO
	1	COB ID	U32	RW
	2	Transmission Type	U8	RW
	3	Inhibit Time	U16	RW
	5	Event Timer	U16	RW

✓ COB-ID is the eigen CAN-ID value of PDO.

✓ In case of iP5A CANopen communication card, Transmission Type fixed at 255(0hFF, Asynchronous). It transmits TPDO at every Event Time.

www.aksaotomasyon.com
AKSA OTOMASYON

➢ **Transmit PDO3 Parameter (0h1802)**

Index	Sub-index	Name	Type	Property
0h1802	0	TPDO3 Parameter	U8	RO
	1	COB ID	U32	RW
	2	Transmission Type	U8	RW
	3	Inhibit Time	U16	RW
	5	Event Timer	U16	RW

✓ COB-ID is the eigen CAN-ID value of PDO.

✓ In case of iP5A CANopen communication card, Transmission Type is fixed at 255(0hFF, Asynchronous). It transmits TPDO by Event Trigger. If there is no change in TPDO data until Event Time elapses, it transmits TPDO. If there is any change in TPDO data before Event Time, it transmits TPDO after the elapse of Inhibit Time.

➢ **Transmit PDO1 Mapping (0h1A00)**

Index	Sub-index	Name	Type	Property
0h1A00	1	PDO Mapping Entry1 **0h6041 Statusword**	U32	RO
	2	PDO Mapping Entry2 **0h6044 Vl Control Effort**	U32	RO

➢ **Transmit PDO3 Mapping (0h1A02)**

Index	Sub-index	Name	Type	Property
0h1A02	1	Input1 0h3010	U32	RW
	2	Input2 0h3011	U32	RW
	3	Input3 0h3012	U32	RW
	4	Input4 0h3013	U32	RW

✓ Output 1~4 reads the value from the parameter of communication address set in COM-41~44 Input 1~4.

www.aksaotomasyon.com
AKSA OTOMASYON

9.2 Standardized Device Profile Area DSP 402

➢ **Error code (0h603F)**

✓ It is the Object used to find the type of Trip when there is Trip in the inverter.

Index	Sub-index	Name	Type	Property
0h603F	-	Error code	U16	R

✓ Below is the table of Error code number responded when there is Trip in the inverter.

Error Code	Trip	Error Code	Trip
0h0000	None	0h7120	No Motor Trip
0h1000	Untitled	0h8401	Speed Dev Trip
0h2220	Inverter OLT	0h8402	OverSpeed
0h2310	OverCurrent1	0h9001	External Trip
0h2330	Ground Trip	0h9002	BX
0h2340	OverCurrent2	0hFF01	Ethermal
0h3130	In Phase Open	0hFF03	Out Phase Open
0h3210	Over Voltage	0hFF04	Over Load
0h3220	Low Voltage	0hFF05	Under Load
0h4000	NTC Open	0hFF06	Thermal Trip
0h4310	Over Heat	0hFF07	Pre PID Fail
0h5000	HWDiag	0hFF0A	Lost Command
0h5450	Fuse Open	-	-

www.aksaotomasyon.com
AKSA OTOMASYON

➢ Controlword (Object : 0h6040)

✓ It is the Object used to operate the inverter.

Index	Sub-index	Name	Type	Property
0h6040	-	Controlword	U16	RW

✓ In the event COM-63 Profile Sel is set to 1 (LS Device Profile (PDO3)), it does not support this parameter.

✓ The following Bit configuration shows the Command by specific bits of Control Word.

Bit	Description
0	Switch on
1	Enable voltage
2	Disable quick stop
3	Enable operation
4	Ramp function generator disable
5	Ramp function generator stop
6	Ramp function generator zero
7	Reset fault
8	Halt
9	Not available
10	Reserved
11~15	Not available

✓ The state of FSA (Finite State Automation) in the Chapter 8 (5) by changing the value of Control word into Bit information related with Device operation command using the values of Bits 0~3 and Bit 7.

✓ For example, Controlword must be 0hxxxF(xxxx xxxx xxxx 1111 (b)) to become “Operation Enable” FAS state in the Chapter 9.5 (in the case of No. 4 Transition).

www.aksaotomasyon.com
AKSA OTOMASYON

Command	7	3	2	1	0	Refer to Chapter 8 (4) FAS	
	Fault reset	Enable operation	Quick stop disable	Enable voltage	Switch on	Trans-formed value	State
Shutdown	0	X	1	1	0	2, 6, 8	Ready to switch on
Switch on	0	0	1	1	1	3	Switched on
Disable Voltage	0	X	X	0	X	7, 9, 10, 12	Switch on disabled
Quick Stop	0	X	0	1	X	7, 10, 11	-
Disable Operation	o	o	1	1	1	5	Switched on
Enable Operation	0	1	1	1	1	4, 16	Operation enabled
Fault Re-set	↑	X	X	X	X	15	Switch on disabled

◈ X symbol means whether it is set to 0 or 1 it won't matter

✓The values between 4bit and 7bit show the Command bits operating at the Operation Mode.

Bit	Value	Description
4 (Enable Ramp)	0	Maintains the previous operating state
	1	Operates the inverter by Command Bit
5 (Unlock Ramp)	0	Output Frequency Hold
	1	Drives up to the targeted frequency
6 (Reference Ramp)	0	Zero is input for the targeted frequency
	1	Set value is input for the targeted fre-
8 (Halt)	X	Not used

www.aksaotomasyon.com
AKSA OTOMASYON

➢ **Statusword (Object : 0h6041)**

✓ It is the Object that indicates the current state of the current Device.

Index	Sub-index	Name	Type	Property
0h6041	-	Statusword	U16	RO

✓ In the event COM-63 Profile Sel is set to 1 (LS Device Profile (PDO3)), it does not support this parameter.

The following Bit configuration shows the Command by specific bits of Statusword.

Bit	Description
0	Ready to switch on
1	Switched on
2	Operation enabled
3	Fault (Trip)
4	Voltage enable
5	Quick stop
6	Switch on disable
7	Warning
8	Not available
9	Remote
10	Target reached
11	Internal limit active
12 ~ 15	Not available

www.aksaotomasyon.com
AKSA OTOMASYON

✓ Bit values such as Bits 0~3, Bit5, and Bit6 following the state of FAS show the state value of Device.

Statusword	PDS FSA state
xxxx xxxx x0xx 0000	Not ready to switch on
xxxx xxxx x1xx 0000	Switch on disable
xxxx xxxx x01x 0001	Ready to switch on
xxxx xxxx x01x 0011	Switch on
xxxx xxxx x01x 0111	Operation enabled
xxxx xxxx x00x 0111	Quick stop active
xxxx xxxx x0xx 1111	Fault reaction active
xxxx xxxx x0xx 1000	Fault

➢ **Vl target velocity (0h6042)**

✓ It is the Object that sets the speed of Target.

Index	Sub-index	Name	Type	Prop-erty	Unit	Range
0h6042	0	Vl target velocity	U16	RW	rpm	-30000 ~ 30000 (-) Reverse (+) Forward

✓ In the event COM-63 Profile Sel is set to 1 (LS Device Profile (PDO3)), it does not support this parameter.

➢ **Vl velocity demand (0h6043)**

✓ It is the Object that shows the output speed of the current inverter.

Index	Sub-index	Name	Type	Prop-erty	Unit	Range
0h6043	0	Vl velocity demand	U16	RO	rpm	-30000 ~ 30000 (-) Reverse (+) Forward

✓ In the event COM-63 Profile Sel is set to 1 (LS Device Profile (PDO3)) it does not support this parameter.

www.aksaotomasyon.com
AKSA OTOMASYON

➢ Vl control effort (0h6044)

- ✓ It is the Object that shows the operation speed of the current motor.
- ✓ If the inverter is under V/F operation or Sensorless operation, it is equal to the value of output speed of the inverter.

Index	Sub-index	Name	Type	Prop-erty	Unit	Range
0h6044	0	Vl control effort	U16	RO	rpm	-30000 ~ 30000 (-) Forward (+) Reverse

- ✓ In the event COM-63 Profile Sel is set to 1 (LS Device Profile (PDO3)) it does not support this parameter.

➢ Vl velocity acceleration (0h6048)

- ✓ It is the Object that sets Acceleration Time.
- ✓ In the event COM-63 Profile Sel is set to 1 (LS Device Profile (PDO3)), it does not support this parameter.
- ✓ As shown in the picture below, it determines acceleration time through Delta Speed and Delta Time.
- ✓ In consideration of the stability of our inverter, it fixes Delta Speed at Max Speed.

$$Vl\ \ Velocity\ \ Acceleration = \frac{Delta\ \ Speed}{Delta\ \ Time}$$

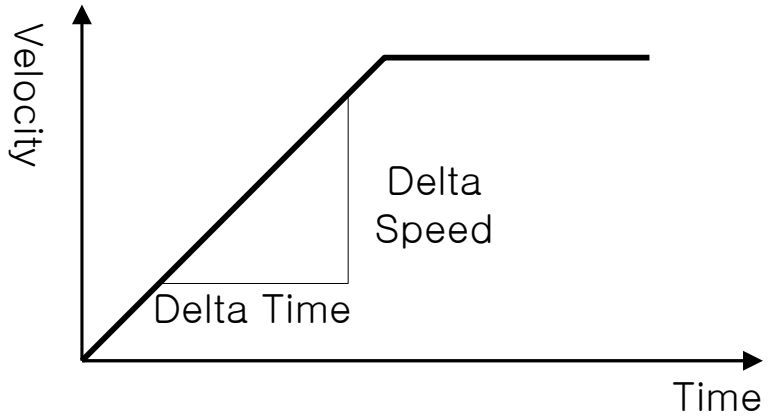

Transfer characteristic of the velocity accleration

www.aksaotomasyon.com
AKSA OTOMASYON

Index	Sub-index	Name	Type	Prop-erty	Unit	Range
0h6048	Vl velocity acceleration		-	-	-	-
	0	Number of en-tries	U8	WO	-	-
	2	Delta Time	U16	WO	sec	0.0 ~ 600.0

- **Vl velocity deceleration(0h6049)**
  - ✓ It is the Object that sets Deceleration Time.
  - ✓ As shown in the picture as below, it determines acceleration time through Delta Speed and Delta Time.
  - ✓ In consideration of the stability of our inverter, it fixes Delta Speed at Max Speed.

$$Vl\ \ velocity\ \text{deceleration} = \frac{Delta\ \ Speed}{Delta\ \ Time}$$

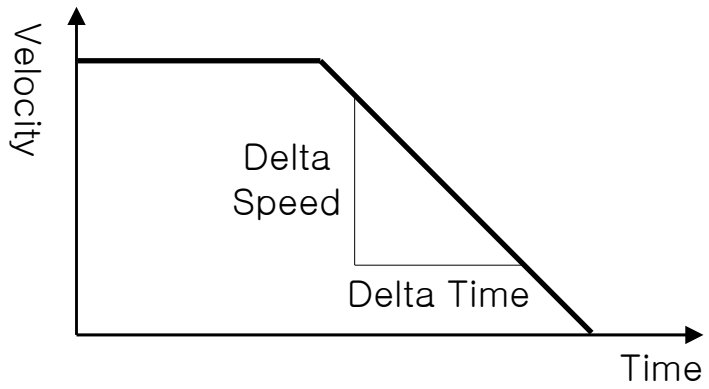

Transfer characteristic of the velocity deceleration

Index	Sub-index	Name	Type	Prop-erty	Unit	Range
0h6049	Vl velocity deceleration		-	-	-	-
	0	Number of entries	U8	WO	-	-
	2	Delta Time	U16	WO	sec	0.0 ~ 600.0

www.aksaotomasyon.com
AKSA OTOMASYON

- **Vl velocity quick stop (0h604A)**
  - ✓ It is the object that sets Quick Stop time.
  - ✓ As shown in the picture as below, it determines Quick Stop Deceleration Time through Delta Speed and Delta Time.
  - ✓ In consideration of the stability of the inverter, it fixes Delta Speed at the maximum speed,

$$Vl\ \ velocity\ \ quick\ \ stop = \frac{Delta\ \ Speed}{Delta\ \ Time}$$

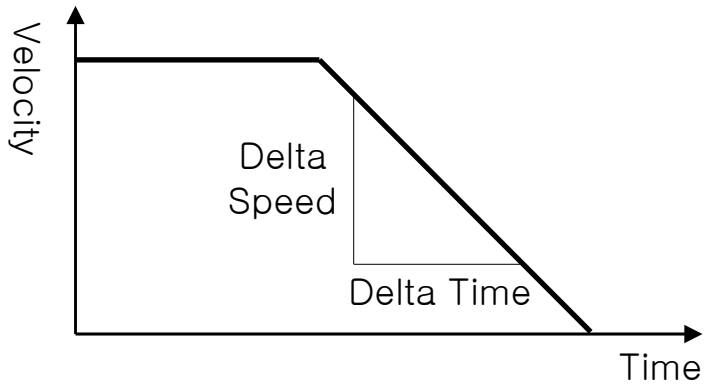

Transfer characteristic of the quick stop

Index	Sub-index	Name	Type	Property	Unit	Range
0h604A	Vl velocity quick stop		-	-	-	-
	0	Number of entries	U8	RO	-	-
	2	Delta Time	U16	RW	sec	0.0 ~ 600.0

www.aksaotomasyon.com
AKSA OTOMASYON

9.3 Manufacturer Specific Profile Object

➢ **SDO address of Keypad parameter domain**

✓ Keypad parameter index values are determined by Group, and Sub-Index is the code number.

✓ The following table shows the index value in accordance with the Group.

Index	Group Name
0h4010	DRV group
0h4011	FU1 group
0h4012	FU2 group
0h4013	I/O group
0h4015	COM group
0h4016	APP group

➢ **Drive group (0h4010)**

Index	Sub-index	Name	Type	Property
0h4010	Code Num **+1**	Keypad parameter name	U16	RO or RW

※ Drive group solely has such a value of Sub-index as Code Number plus 1.

E.g.) To read the value of DRV-01 ACC. Time parameter, read the values of Index 0h4010 and Sub-index 2 (Code Number + 1).

➢ **FU1 group (0h4011)**

Index	Sub-index	Name	Type	Property
0h4011	Code Num	Keypad parameter Name	U16	RO or RW

www.aksaotomasyon.com
AKSA OTOMASYON

E.g.) To read the value of FU1-02 ACC. Pattern parameter, read the values of Index 0h4011 and Sub-index 2 (Code Number).

- **FU2 group (0h4012)**

Index	Sub-index	Name	Type	Property
0h4012	Code Num	Keypad parameter Name	U16	RO or RW

- **I/O group (0h4013)**

Index	Sub-index	Name	Type	Property
0h4013	Code Num	Keypad parameter Name	U16	RO or RW

- **COM group (0h4015)**

Index	Sub-index	Name	Type	Property
0h4015	Code Num	Keypad parameter Name	U16	RO or RW

- **APP group (0h4016)**

Index	Sub-index	Name	Type	Property
0h4016	Code Num	Keypad parameter Name	U16	RO or RW

www.aksaotomasyon.com
AKSA OTOMASYON

Warranty

Maker	**LSIS Co., Ltd.**	**Installation (Start-up) Date**	
Model No.	***SV-iP5A CANopen Option Card***	**Warranty Period**	
Customer Information	Name		
	Address		
	Tel.		
Sales Office (Distributor)	Name		
	Address		
	Tel.		

This product has been manufactured through a strict quality management and inspection process by LS Technical Team. The warranty period is 18 months from the date manufactured, provided that, the warranty period is subject change depending on the terms and condition of the agreement under separate cover.

FOC Service

If there is any failure in the product during the afore-mentioned warranty period you can have it repaired FOC by requesting our distributor or designated service center subject that you are found to have used it under our recommended environment. For further details, please refer to out company's regulation.

Charged Service

■ In the event of any of the following cases, the service will be charged.

- The failure occurred from the consumer's improper storage, handling, and careless handling
- The failure occurred from the consumer's error in the design of software or hardward
- The failure occurred from the error of power source and the defect of the connector
- The failure occurred from the force majeure (fire, flood, gas disaster, earthquake, etc.)
- The product was modified or repaired at the discretion of the consumer in the place other than our Distributor or the Service Center.
- The name plate provided by LS is not attached on the product
- The product was used in an improper way or beyond the operating range.

■ Repair Warranty Period for the Discontinued Model

- For the product discontinued, the repair service will be provided with charge for five years from the date discontinued.

■ Waiver of the warranty for the mechanical loss, etc.

LSIS Co., Ltd. doesn't bear any responsibility to indemnify indirect, special, incidental, or consequential loss (including the indemnification of sales loss, loss profit, etc.

www.aksaotomasyon.com
AKSA OTOMASYON

www.aksaotomasyon.com
AKSA OTOMASYON