This operation manual is intended for users with basic knowledge of electricity and electric devices.
* LSLV- M100 is the official name for the M100 series inverters.

Thank you for purchasing LSIS inverter.

Safety Information

Read and follow all safety instructions in this manual precisely to avoid unsafe operating conditions, property damage, personal injury, or death.

Safety symbols in this manual

⚠ Danger

Indicates an imminently hazardous situation which, if not avoided, will result in severe injury or death.

⚠ Warning

Indicates a potentially hazardous situation which, if not avoided, could result in injury or death.

ⓘ Caution

Indicates a potentially hazardous situation that, if not avoided, could result in minor injury or property damage.

Safety information

⚠ Danger

- Do not open the cover of the equipment while it is on or operating. Likewise, do not operate the inverter while the cover is open. Exposure of high voltage terminals or charging area to the external environment may result in an electric shock. Do not remove any covers or touch the internal circuit boards (PCBs) or electrical contacts on the product when the power is on or during operation. Doing so may result in serious injury, death, or serious property damage.
- Do not open the cover of the equipment even when the power supply to the inverter has been turned off unless it is necessary for maintenance or regular inspection. Opening the cover may result in an electric shock even when the power supply is off.
- The equipment may hold charge long after the power supply has been turned off. Use a multi-meter to make sure that there is no voltage before working on the inverter, motor or motor cable.

⚠ Warning

- This equipment must be grounded for safe and proper operation.
- Do not supply power to a faulty inverter. If you find that the inverter is faulty, disconnect the power supply and have the inverter professionally repaired.
- The inverter becomes hot during operation. Avoid touching the inverter until it has cooled to avoid burns.
- Do not allow foreign objects, such as screws, metal chips, debris, water, or oil to get inside the inverter. Allowing foreign objects inside the inverter may cause the inverter to malfunction or result in a fire.
- Do not operate the inverter with wet hands. Doing so may result in electric shock.
- Check the protection degree of circuits and equipments used in the inverter degree of circuit protection and the degree of equipment protection.
  The following connection terminals and components are electrical protection class 0 devices. The circuit is protected by the essential insulation and electric shock may occur if the insulation is done improperly. The same protection measures for electric cables must be taken when the using or installing the following components, or when you connect a cable to the following terminals or components.
  - Multi-function terminals: P1–P3, P4 (Advanced I/O), P5 (Advanced I/O), CM
  - Analog terminal inputs and outputs: VR, V1, I2 (Advanced I/O), AO, CM
  - Other terminal block connectors: Q1(Standard I/O), EG (Standard I/O), 24, A1, B1, C1, A2 (Advanced I/O), C2 (Advanced I/O)
  - Cooling fan
- This inverter is a protection class 1 product.

Caution

- Do not modify the interior workings of the inverter. Doing so will void the warranty.
- The inverter is designed for 3-phase motor operation. Do not use the inverter to operate a single phase motor.
- Do not place heavy objects on top of electric cables. Doing so may damage the cable and result in an electric shock.

AKSA OTOMASYON

Note

Maximum allowed prospective short-circuit current at the input power connection is defined in IEC 60439-1 as 100 kA. Depending on the selected MCCB, the LSLV-M100 Series is suitable for use in circuits capable of delivering a maximum of 100 kA RMS symmetrical amperes at the drive's maximum rated voltage. The following table shows the recommended MCCB for RMS symmetrical amperes.

Remarque

Le courant maximum de court-circuit présumé autorisé au connecteur d'alimentation électrique est défini dans la norme IEC 60439-1 comme égal à 100 kA. Selon le MCCB sélectionné, la série LSLV-M100 peut être utilisée sur des circuits pouvant fournir un courant RMS symétrique de 100 kA maximum en ampères à la tension nominale maximale du variateur. Le tableau suivant indique le MCCB recommandé selon le courant RMS symétrique en ampères.

Working Voltage	UTE100(E/N)	UTS150(N/H/L)	ABS33c	ABS53c	ABS63c	ABS103c
240V(50/60Hz)	50/65 kA	65/100/150 kA	30 kA	35 kA	35 kA	85 kA

AKSA OTOMASYON

Quick Reference Table

The following table contains situations frequently encountered by users while working with inverters. Refer to the typical and practical situations in the table to quickly and easily locate answers to your questions.

Situation	Reference
I want to configure the inverter to start operating as soon as the power source is applied.	p.84
I want to configure the motor's parameters.	p.193
Something seems to be wrong with the inverter or the motor.	p.217
What are the recommended wiring lengths?	p.23
The motor is too noisy.	p.130
I want to apply PID control on my system.	p.121
What are the factory default settings for multi-function terminals?	p. 201, p. 205
I want to review recent fault trip and warning histories.	p.156
I want to change the inverter's operation frequency using a potentiometer.	p.68, p.69 p.70
I want to install a frequency meter using an analog terminal.	p.142
I want to monitor the supply current to motor.	p.57, p.151
I want to operate the inverter using a multi-step speed configuration.	p. 78
The motor runs too hot.	p.159
The inverter is too hot.	p.161
The cooling fan does not work.	p.150
I want to change the items that are monitored on the keypad.	p.232
I want to operate the inverter using a multi-step speed configuration.	p.151

AKSA OTOMASYON

Table of Contents

1 Preparing the Installation 1
1.1 Product Identification 1
1.2 Part Names 3
1.3 Installation Considerations 6
1.4 Selecting and Preparing a Site for Installation 7
1.5 Cable Selection 11
2 Installing the Inverter 13
2.1 Mounting the Inverter 15
2.2 Cable Wiring 18
2.3 Post-Installation Checklist 34
2.4 Test Run 36
3 Learning to Perform Basic Operations 39
3.1 About the Keypad 39
3.1.1 About the Display 40
3.1.2 Operation Keys 41
3.1.3 Control Menu 42
3.2 Learning to Use the Keypad 43
3.2.1 Group Selection 43
3.2.2 Code Selection 45
3.2.3 Navigating Directly to Different Codes 46
3.2.4 Switching to a Different Code 47
3.2.5 Setting Parameter Values 48
3.3 Actual Application Examples 49
3.3.1 Acceleration Time Configuration 49
3.3.2 Frequency Reference Configuration 50
3.3.3 Frequency Setting 51
3.3.4 Initializing All Parameters 52
3.3.5 Frequency Setting (Keypad) and Operation (via Terminal Input) 53
3.3.6 Frequency Setting (Potentiometer) and Operation (Terminal Input) 54
3.3.7 Frequency Setting (Potentiometer) and Operation (Keypad) 55
3.4 Monitoring the Operation 57
3.4.1 Output Current Monitoring 57
3.4.2 Fault Trip Monitoring 58

4 Control Block Diagram 61
4.1 Setting Frequency 62
4.2 Setting Run Command 64
4.3 Controlling Acc/Dec and V/F Voltage 65
5 Learning Basic Features 67
5.1 Setting Frequency Reference 67
5.1.1 Keypad as the Source (KeyPad-1 setting) 68
5.1.2 Keypad as the Source (KeyPad-2 setting) 68
5.1.3 Built-in Volume input (V0) 0 – 5 [V] as the Source 68
5.1.4 V1 Terminal as the Source 69
5.1.5 Input Current (Terminal I2) as the Source 70
5.1.6 Input Voltage (Terminal I2) as the Source 72
5.1.7 Frequency Reference Setting via Built-in Volume (V0) and I2 Terminal 73
5.1.8 Frequency Reference Setting via Built-in Volume (V0) and I2 Terminal 74
5.1.9 Frequency Reference Setting via Built-in Volume (V0) and V1 Terminal 75
5.1.10 Frequency Reference Setting via RS-485 Communication 76
5.1.11 Frequency Reference Setting via Digital Volume (Up-Down) 76
5.2 Holding Analog Command Frequency 77
5.3 Setting Multi-step Frequency 78
5.4 Command Source Configuration 80
5.4.1 The Keypad as a Command Input Device 80
5.4.2 Terminal Block as a Command Input Device (Fwd/Rev Run Commands) 81
5.4.3 Terminal Block as a Command Input Device (Run and Rotation Direction Commands) 82
5.4.4 RS-485 Communication as a Command Input Device 83
5.5 Forward or Reverse Run Prevention 84
5.6 Power-on Run 84
5.7 Reset and Restart 85
5.8 Setting Acceleration and Deceleration Times 86
5.8.1 Acc/Dec Time Based on Maximum Frequency 86
5.8.2 Acc/Dec Time Based on Operation Frequency 87
5.8.3 Multi-step Acc/Dec Time Configuration 88
5.9 Acc/Dec Pattern Configuration 91
5.10 Stopping the Acc/Dec Operation 94
5.11 V/F(Voltage/Frequency) Control 95

5.11.1 Linear V/F Pattern Operation 95
5.11.2 Square Reduction V/F pattern Operation 96
5.11.3 User V/F Pattern Operation 96
5.11.4 Output Voltage Setting 97
5.12 Torque Boost 98
5.12.1 Manual Torque Boost 98
5.12.2 Auto Torque Boost 100
5.13 Stop Mode Setting 101
5.13.1 Deceleration Stop 101
5.13.2 Stop After DC Braking 101
5.13.3 Free Run Stop 102
5.14 Frequency Limit 103
5.14.1 Frequency Limit Using Maximum Frequency and Start Frequency 103
5.14.2 Frequency Limit Using Upper and Lower Limit Frequency Values 103
5.14.3 Frequency Jump 104
6 Learning Advanced Features 107
6.1 DC Braking 107
6.1.1 Stop After DC Braking 107
6.1.2 Start After DC Braking 108
6.1.3 DC Braking During Stop 109
6.2 Jog operation 110
6.2.1 Jog Operation 1-Forward Jog by Multi-function Terminal 110
6.2.2 Jog Operation 2-Fwd/Rev Jog by Multi-function Terminal 111
6.3 Up-down Operation 112
6.4 3-Wire Operation 116
6.5 Dwell Operation 117
6.6 Slip Compensation Operation 119
6.7 PID Control 121
6.7.1 PID Basic Control 122
6.8 Energy Saving Operation 126
6.9 Speed Search Operation 127
6.10 Auto Restart Settings 129
6.11 Operational Noise Settings (carrier frequency settings) 130
6.12 2nd Motor Operation 131
6.13 Frequency Setting and 2nd Operation Mode Setting 132

6.14 Input Voltage Setting....135
6.15 Parameter Initialization....136
6.16 Parameter Lock....138
6.17 Voltage Trip Prevention During Deceleration....139
6.18 Brake Control....140
6.19 Analog Output....142
6.20 Digital Output....143
6.20.1 Multi-function Relay Output Terminal Settings....143
6.21 Draw Operation....148
6.22 Operation Mode Setting When Cooling Fan is Abnormal....150
6.23 Operation State Monitor....151
6.24 I/O Terminal Block State Monitor....154
6.25 Fault State Monitor....156
7 Learning Protection Features....159
7.1 Motor Protection....159
7.1.1 Electronic Thermal Motor Overheating Prevention (ETH)....159
7.1.2 Overload Early Warning and Trip....161
7.1.3 Stall Prevention....162
7.2 Inverter and Sequence Protection....163
7.2.1 Output Open-phase Protection....163
7.2.2 External Trip Signal....164
7.2.3 Inverter Overload Protection....165
7.2.4 Speed Command Loss....166
7.2.5 Dynamic Braking (DB) Resistor Configuration....168
7.2.6 Initial charging circuit trip(ROT)....170
8 RS-485 Communication Features....171
8.1 Communication Standards....171
8.2 Communication System Configuration....172
8.2.1 Communication Line Connection....173
8.2.2 Setting Communication Parameters....173
8.2.3 Setting Operation Command and Frequency....175
8.2.4 Command Loss Protective Operation....175
8.2.5 Parameter Group for Data Transmission....176
8.3 Communication Protocol....176
8.3.1 LS INV 485 Protocol....176

8.3.2 Modbus-RTU Protocol 183
8.4 Compatible Common Area Parameter 186
9 Table of Functions 189
9.1 Operation Group 189
9.2 Drive Group (PAR → dr) 191
9.3 Basic Function group (PAR→bA) 193
9.4 Expanded Function group (PAR→Ad) 197
9.5 Control Function group (PAR→Cn) 200
9.6 Input Terminal Block Function group (PAR→In) 201
9.7 Output Terminal Block Function group (PAR→OU) 205
9.8 Communication Function group (PAR→CM) 207
9.9 Application Function group (PAR→AP) 209
9.10 Protection Function group (PAR→Pr) 211
9.11 2nd Motor Function group (PAR→M2) 214
9.12 Config Mode group (PAR→CF) 215
10 Troubleshooting 217
10.1 Trips 217
10.1.1 Fault Trips 218
10.2 Troubleshooting Fault Trips 220
10.3 Troubleshooting Other Faults 222
11 Maintenance 229
11.1 Regular Inspection Lists 229
11.1.1 Daily Inspections 229
11.1.2 Annual Inspections 230
11.1.3 Bi-annual Inspections 231
11.2 Storage and Disposal 232
11.2.1 Storage 232
11.2.2 Disposal 232
12 Technical Specification 234
12.1 Input and Output Specification 234
12.2 Product Specification Details 235
12.3 External Dimensions (IP 20 Type) 237
12.4 Peripheral Devices 239
12.5 Fuse and Reactor Specifications 239
12.6 Terminal Screw Specification 240

12.7 Braking Resistor Specification 241
12.8 Continuous Rated Current Derating 241
12.9 Remote Keypad Option 245
Product Warranty 247
Index 251

AKSA OTOMASYON

AKSA
OTOMASYON

1 Preparing the Installation

This chapter provides details on product identification, part names, correct installation and cable specifications. To install the inverter correctly and safely, carefully read and follow the instructions.

1.1 Product Identification

The M100 Inverter is manufactured in a range of product groups based on drive capacity and power source specifications. Product name and specifications are detailed on the rating plate. The illustration on the next page shows the location of the rating plate. Check the rating plate before installing the product and make sure that the product meets your requirements. For more detailed product specifications, refer to *12.1 Input and Output Specification* on page *234*.

Note

Check the product name, open the packaging, and then confirm that the product is free from defects. Contact your supplier if you have any issues or questions about your product.

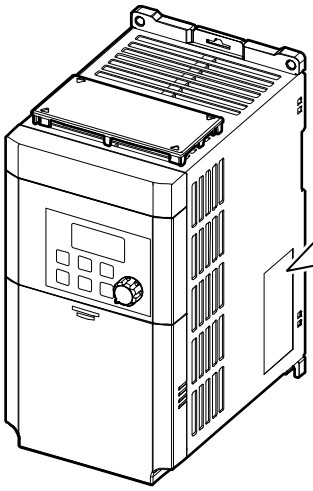

LSLV0022M100-1E0FNS

INPUT 200-240V 1 Phase 50/60Hz
10.0A
OUTPUT 0-inputV 1 Phase 0.01-400Hz
3.8kVA
Ser. No 55025310146
Inspected by D. K. YU
KCC-REM-LSR-XXXXXXX

LSLV 0022 M100 - 1E0FNS

Motor capacity

- 0001 - 0.1kW
- 0002 - 0.2kW
- 0004 - 0.4kW
- 0008 - 0.75kW
- 0015 - 1.5kW
- 0022 - 2.2kW

Series name

Input voltage

- 1 - Single phase 200V~240V

Keypad

- E - LED Keypad

UL Type

- O - UL Open Type

EMC filter

- F - Built-in EMC fil(C2)

Reactor

- N - Non-Reactor

I/O

- S - Standard
- A - Advanced

AKSA OTOMASYON

0.1~0.2 kW (Single Phase)

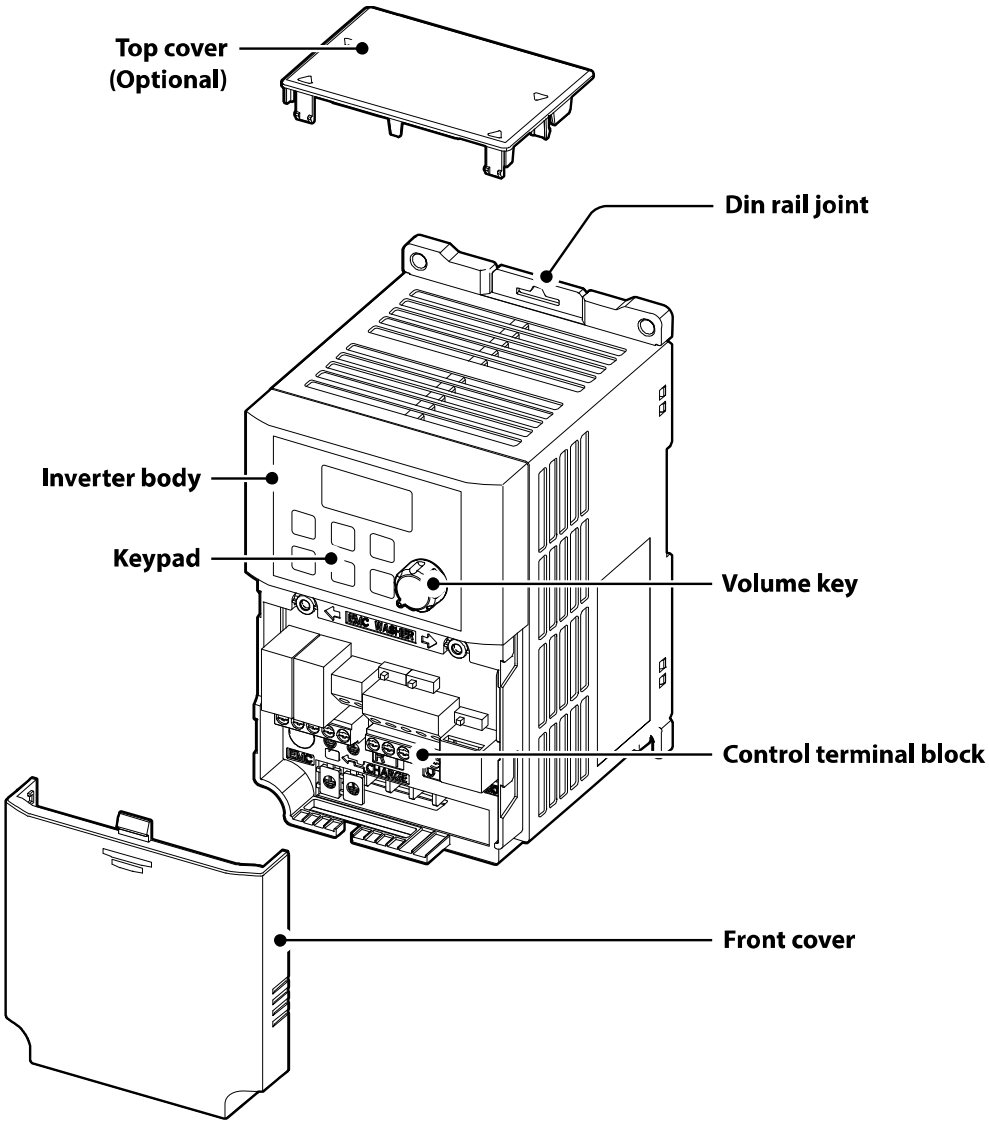

0.4~0.75 kW (Single Phase)

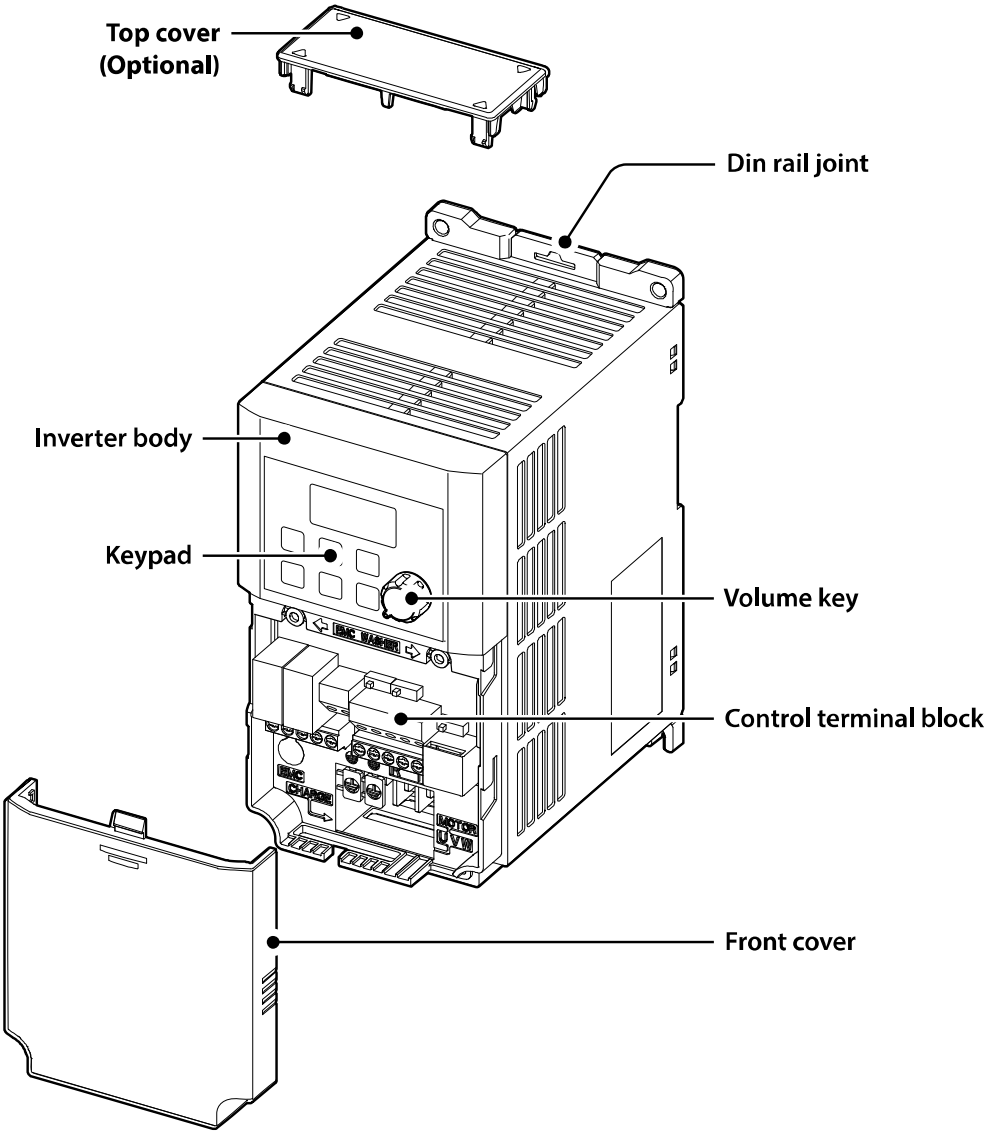

AKSA OTOMASYON

1.5~2.2 kW (Single Phase)

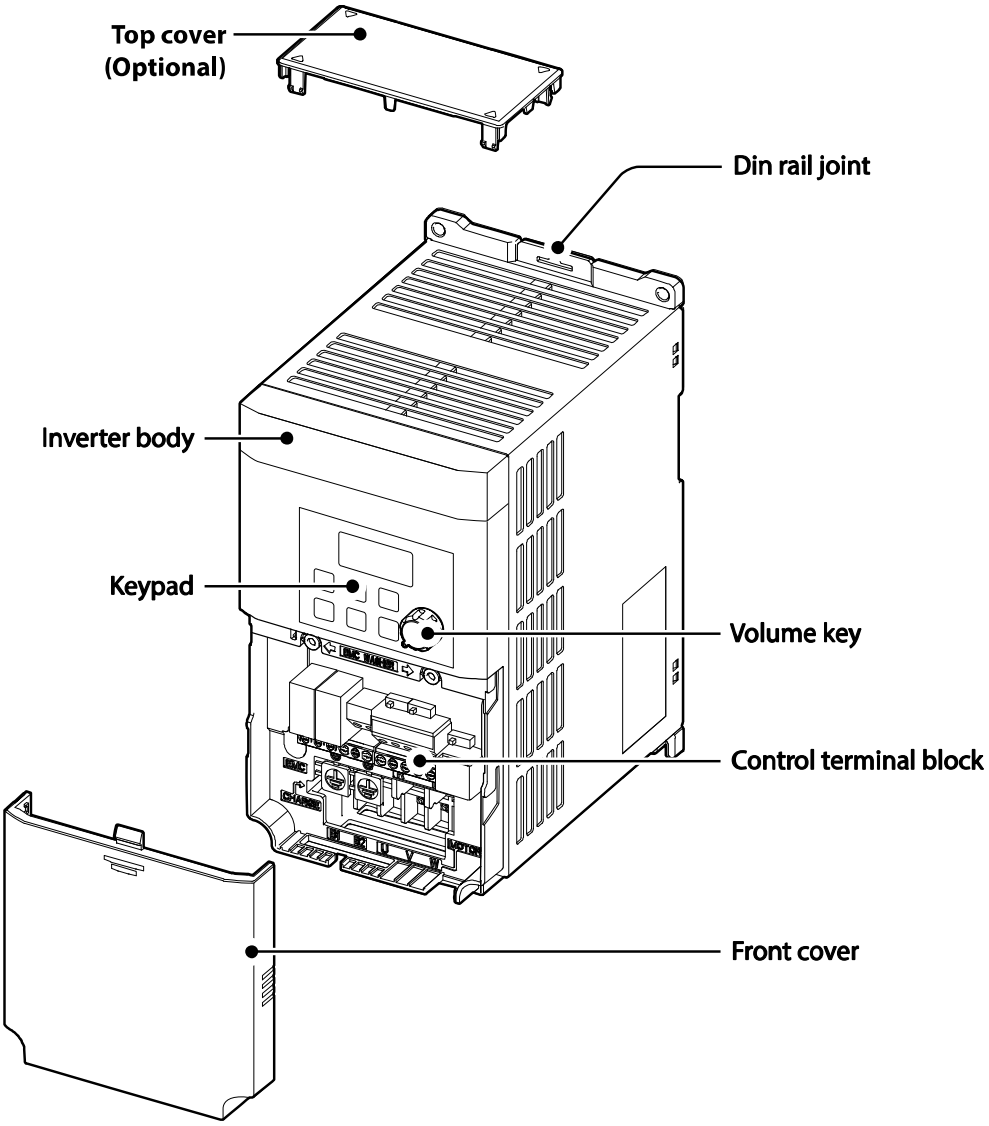

AKSA OTOMASYON

1.3 Installation Considerations

Inverters are composed of various precision, electronic devices, and therefore the installation environment can significantly impact the lifespan and reliability of the product. The table below details the ideal operation and installation conditions for the inverter.

Items	Description
Ambient Temperature [1)]	14–122°F (-10–50℃)
Ambient Humidity	95% relative humidity (no condensation)
Storage Temperature	- 4–149°F (-20–65℃)
Environmental Factors	An environment free from corrosive or flammable gases, oil residue or dust
Altitude/Vibration	Lower than 3,280 ft (1,000 m) above sea level/less than 1G (9.8 m/sec^2)
Air Pressure	70~106 kPa

1) The ambient temperature is the temperature measured at a point 2” (5 cm) from the surface of the inverter.

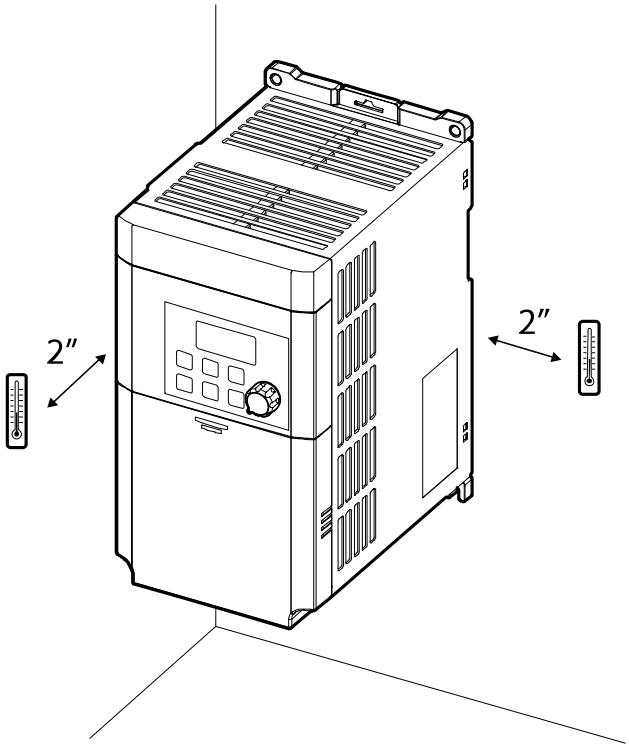

Caution

Do not allow the ambient temperature to exceed the allowable range while operating the inverter.

1.4 Selecting and Preparing a Site for Installation

When selecting an installation location consider the following points:

- The inverter must be installed on a wall that can support the inverter's weight.
- The location must be free from vibration. Vibration can adversely affect the operation of the inverter.
- The inverter can become very hot during operation. Install the inverter on a surface that is fire-resistant or flame-retardant and with sufficient clearance around the inverter to allow air to circulate. The illustrations below detail the required installation clearances.

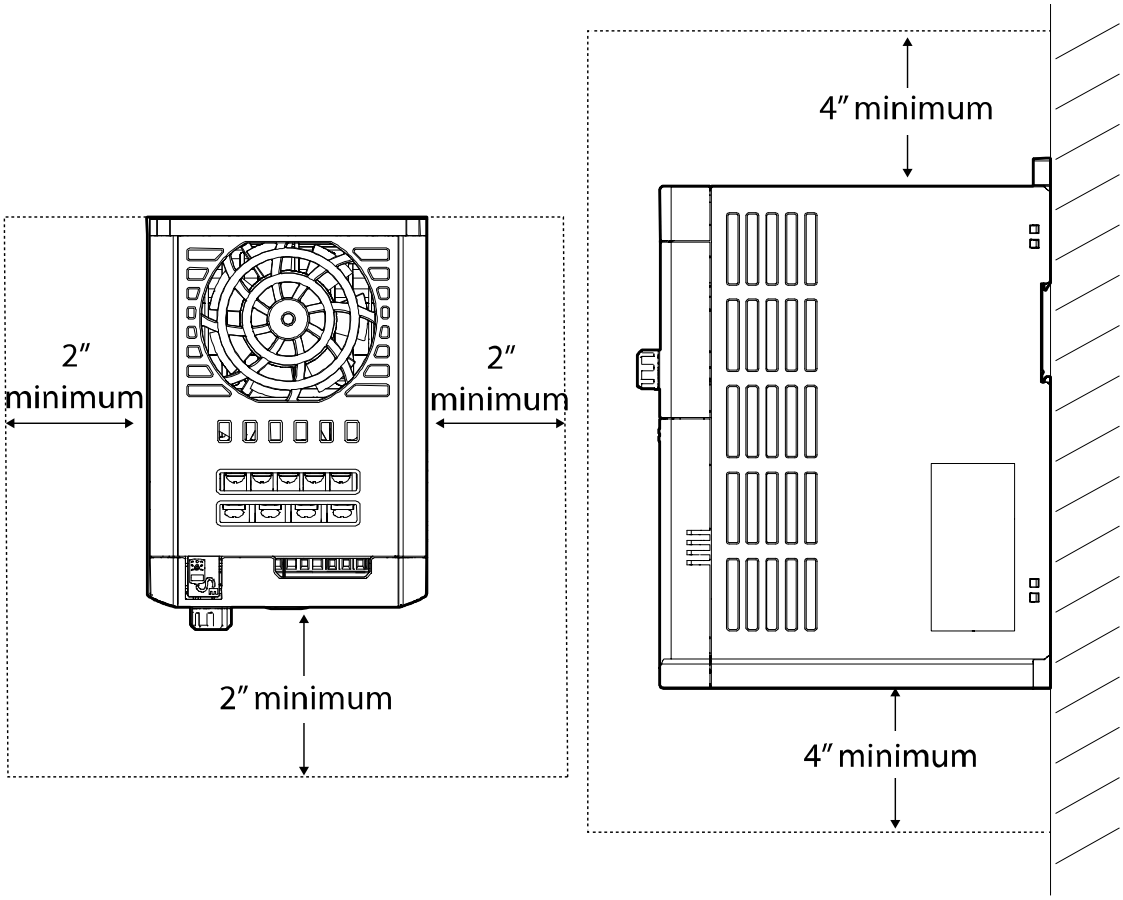

- Ensure sufficient air circulation is provided around the inverter when it is installed. If the inverter is to be installed inside a panel, enclosure, or cabinet rack, carefully consider the position of the inverter's cooling fan and the ventilation louver. The cooling fan must be positioned to efficiently transfer the heat generated by the operation of the inverter.

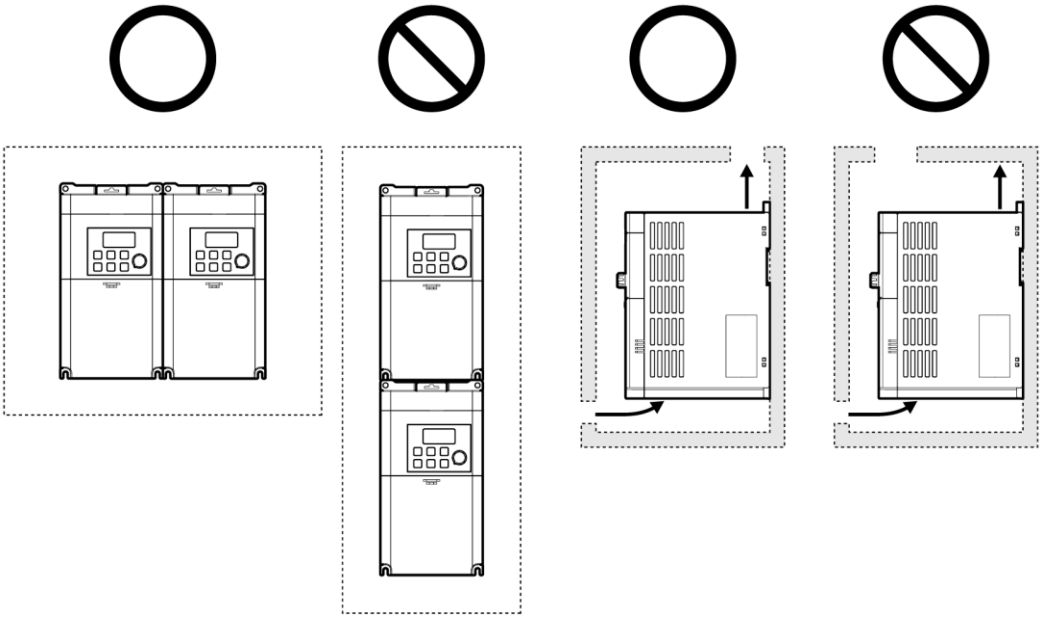

AKSA OTOMASYON

- If you are installing multiple inverters in one location, arrange them side by side and remove their top covers (optional). The top covers MUST be removed for side-by-side installations. Use a flat head screwdriver to remove the top cover.
- Keep the distance between inverters at least 0.1".

AKSA OTOMASYON

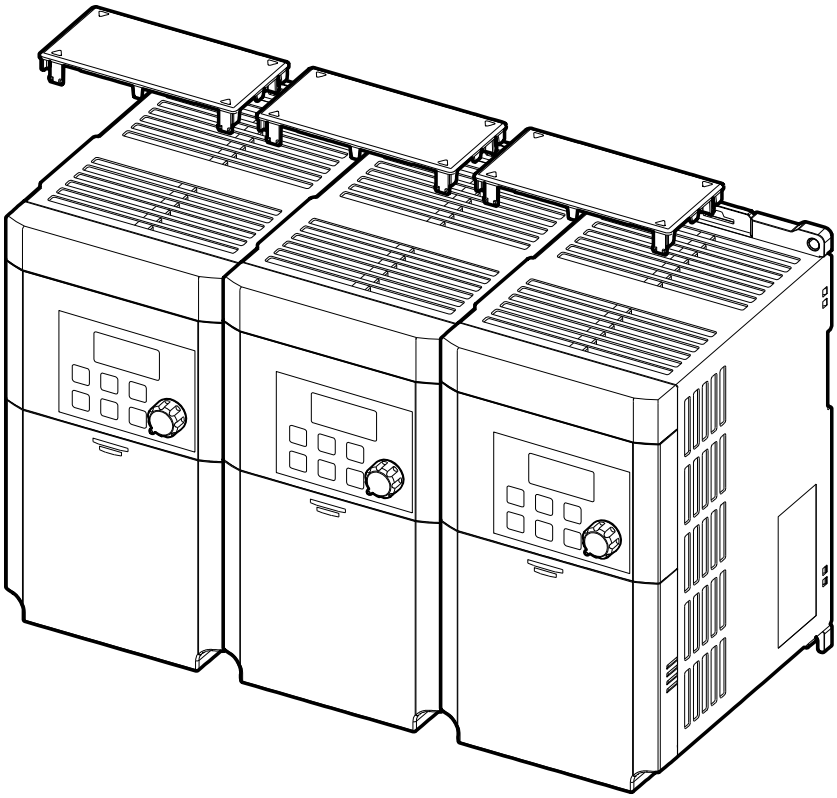

- If you are installing multiple inverters, of different ratings, provide sufficient clearance to meet the clearance specifications of the larger inverter.

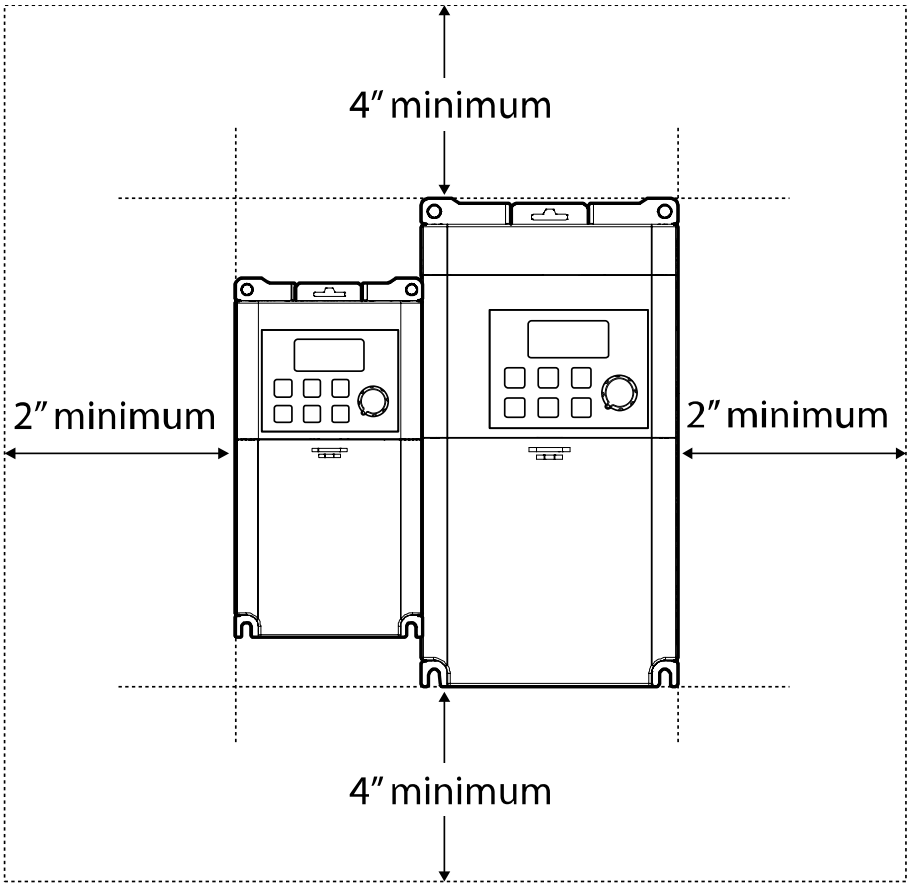

AKSA OTOMASYON

1.5 Cable Selection

When you install power and signal cables in the terminal blocks, only use cables that meet the required specification for the safe and reliable operation of the product. Refer to the following information to assist you with cable selection.

Caution

- Wherever possible use cables with the largest cross-sectional area for mains power wiring, to ensure that voltage drop does not exceed 2%.
- Use copper cables rated for 600V, 75℃ for power terminal wiring.
- Use copper cables rated for 300V, 75℃ for control terminal wiring.

Ground Cable and Power Cable Specifications

Load (kW)		Ground		Power I/O			
		mm^2	AWG	mm^2		AWG	
				R/S/T	U/V/W	R/S/T	U/V/W
Single Phase 200V	0.1	3.5	12	2	2	14	14
	0.2						
	0.4						
	0.75						
	1.5	3.5	12	3.5	3.5	12	12
	2.2						

Signal (Control) Cable Specifications

Terminal	Signal Cable			
	Without Crimp Terminal Connectors (Bare wire)		With Crimp Terminal Connectors (Bootlace Ferrule)	
	mm^2	AWG	mm^2	AWG
P1~P5/CM/VR/V1/I2/AO/Q1/EG/24[1)]	0.75	18	0.5	20
A1/B1/C1/A2/C2[1)]	1.0	17	1.5	15

1) There are no P4, P5, I2, A2, and C2 terminals on the standard I/O, and there are no Q1 and EG terminals on the Advanced I/O. For more details, refer to *2.2 Cable Wiring Step 4 Control Terminal Wiring* on page *24*.

AKSA OTOMASYON

2 Installing the Inverter

This chapter describes the physical and electrical installation methods, including mounting and wiring of the product. Refer to the flowchart and basic configuration diagram provided below to understand the procedures and installation methods to be followed to install the product correctly.

Installation Flowchart

The flowchart lists the sequence to be followed during installation. The steps cover equipment installation and testing of the product. More information on each step is referenced in the steps.

Product Identification (*1.1 Product Identification*)

↓

Select the Installation Location (*1.3 Installation Considerations*)

↓

Mounting the Inverter (*2.1 Mounting the Inverter*)

↓

Wiring the Ground Connection (*2.2 Cable Wiring*)

↓

Power and Signal Wiring (*2.2 Cable Wiring*)

↓

Post-Installation Checks

↓

Turning on the Inverter

↓

Parameter Configuration (*3.2 Learning to Use the Keypad*)

↓

Testing

Basic Configuration Diagram

The reference diagram below shows a typical system configuration showing the inverter and peripheral devices.

Prior to installing the inverter, ensure that the product is suitable for the application (power rating, capacity, etc). Ensure that all of the required peripherals and optional devices (resistor brakes, contactors, noise filters, etc.) are available. For more details on peripheral devices, refer to *0 Unit:* mm (inches)

Peripheral Devices on page *239*.

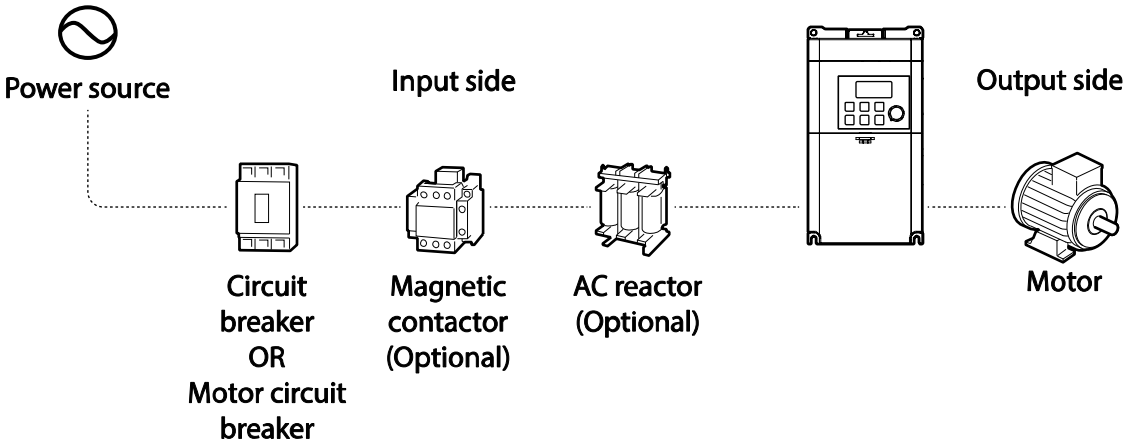

Caution

- Figures in this manual are shown with covers or circuit breakers removed to show a more detailed view of the installation arrangements. Install covers and circuit breakers before operating the inverter. Operate the product according to the instructions in this manual.
- Do not start or stop the inverter using a magnetic contactor, installed on the input power supply.
- If the inverter is damaged and loses control, the machine may cause a dangerous situation. Install an additional safety device such as an emergency brake to prevent these situations.
- High levels of current draw during power-on can affect the system. Ensure that correctly rated circuit breakers are installed to operate safely during power-on situations.
- Reactors can be installed to improve the power factor. Note that reactors may be installed within 30 ft (9.14 m) from the power source if the input power is 10 times over the inverter's power. Refer to *12.5 Fuse and Reactor Specifications* on page *239* and carefully select a reactor that meets the equipment.

2.1 Mounting the Inverter

Mount the inverter on a wall or inside a panel following the procedures provided below. Before installation, ensure that there is sufficient space to meet the clearance specifications, and that there are no obstacles impeding the cooling fan's air flow.

Select a wall or panel suitable to support the installation. Refer to *12.3 External Dimensions (IP 20 Type)* on page *237* and check the inverter's mounting bracket dimensions.

1. Use a level to draw a horizontal line on the mounting surface, and then carefully mark the fixing points
2. Drill the two upper mounting bolt holes, and then install the mounting bolts. Do not fully tighten the bolts at this time. Fully tighten the mounting bolts after the inverter has been mounted.

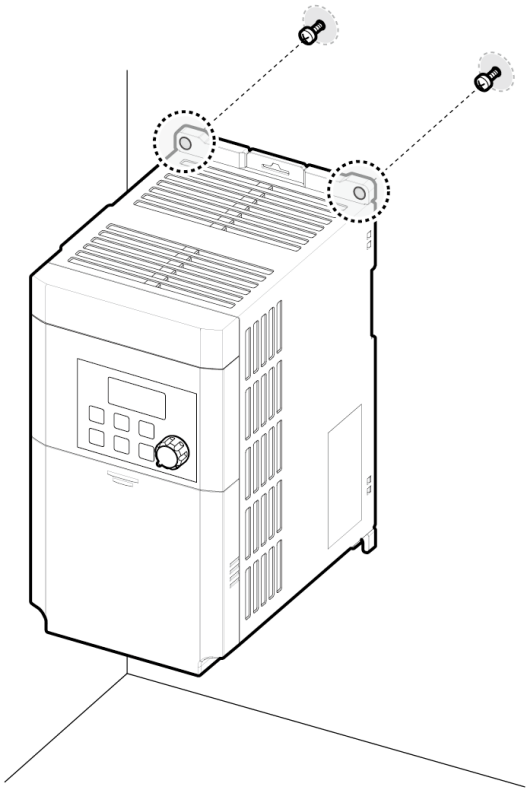

3 Mount the inverter on the wall or inside a panel using the two upper bolts, and then fully tighten the mounting bolts. Ensure that the inverter is placed flat on the mounting surface, and that the installation surface can securely support the weight of the inverter.

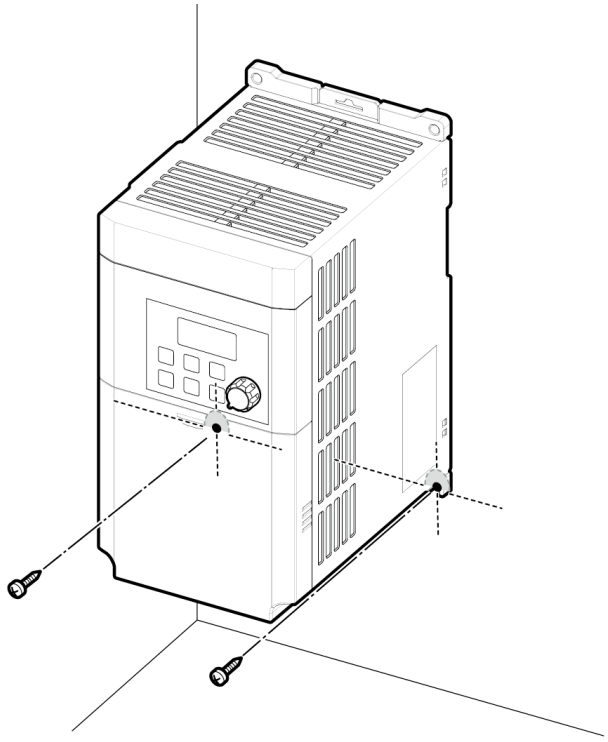

Note

The quantity and dimensions of the mounting brackets vary based on frame size. Refer to *12.3 External Dimensions (IP 20 Type)* on page *237* for detailed information about your model.

Caution

- Do not transport the inverter by lifting with the inverter's covers or plastic surfaces. The inverter may tip over if covers break, causing injuries or damage to the product. Always support the inverter using the metal frames when moving it.
- Use an appropriate transport method that is suitable for the weight.
- Do not install the inverter on the floor or mount it sideways against a wall. The inverter MUST be installed vertically, on a wall or inside a panel, with its rear flat on the mounting surface.

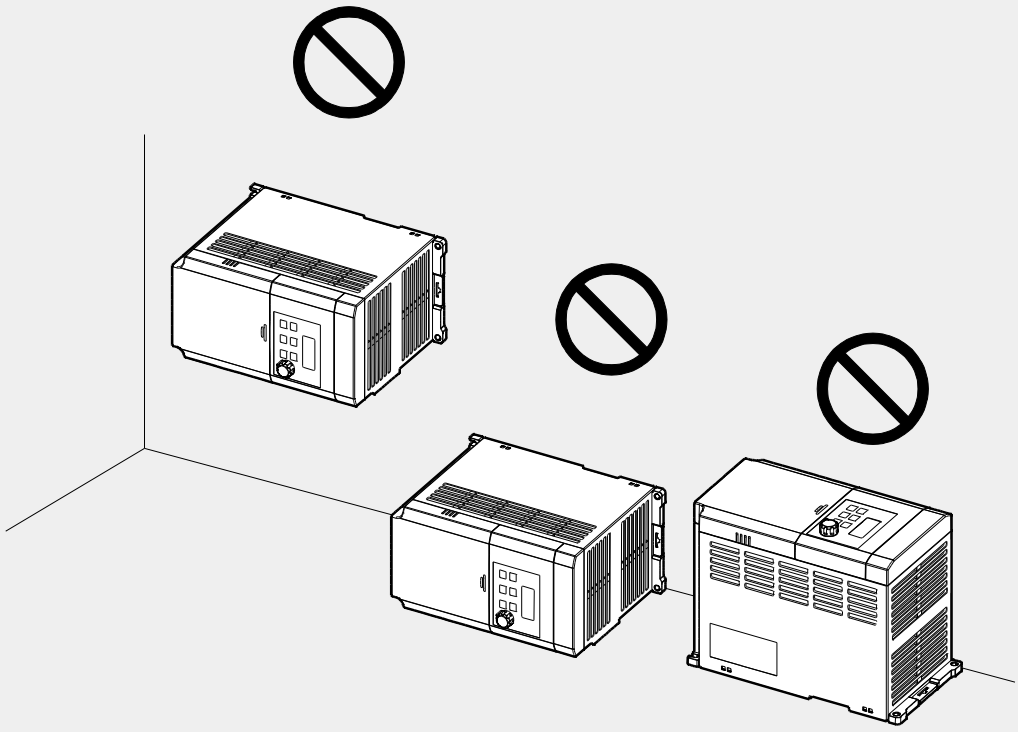

2.2 Cable Wiring

Remove the control terminal cover, and then install the ground connection as specified. Complete the cable connections by connecting an appropriately rated cable to the terminals on the power and control terminal blocks.

Caution

- Install the inverter before carrying out wiring connections.
- Ensure that no small metal debris, such as wire cut-offs, remain inside the inverter. Metal debris in the inverter may cause inverter failure.
- Tighten terminal screws to their specified torque. Loose terminal block screws may allow the cables to disconnect and cause short circuit or inverter failure. Refer to *12.6 Terminal Screw Specification* on page *240* for torque specifications.
- Do not place heavy objects on top of electric cables. Heavy objects may damage the cable and result in electric shock.
- The inverter's power is supplied by the supply grounding system. The TT, TN, IT, and corner-grounded systems are not suitable for this inverter.
- The inverter may generate direct current to the inverter's protective ground cable. Only type B Residual Current Devices (RCD) or Residual Current Monitors (RCM) can be installed.
- Use cables with the largest cross-sectional area, appropriate for power terminal wiring, to ensure that voltage drop does not exceed 2%.
- Use copper cables rated at 600V, 75℃ for power terminal wiring.
- Use copper cables rated at 300V, 75℃ for control terminal wiring.
- Connect the control terminals separately from the power terminal wiring or high potential circuit (200 V relay sequence circuit).
- Ensure that there are no control terminal shorts or improper wiring. Control terminal shorts or improper wiring may damage the inverter or cause malfunction.
- Use a shielded cable while making wiring connections at the control terminal. Unshielded cables may cause the inverter to malfunction due to interference. Use an STP cable if ground connections must be installed.
- If you need to re-wire the terminals due to wiring-related faults, ensure that the inverter keypad display is turned off and the charge lamp under the front cover is off before working on wiring connections. The inverter may hold a high voltage electric charge long after the power supply has been turned off.

Step1 Front Cover, Control Terminal Cover and Cable Guide

The front cover must be removed to install cables.

1 Slide the front cover downward while pressing and holding the upper-center part of the cover.

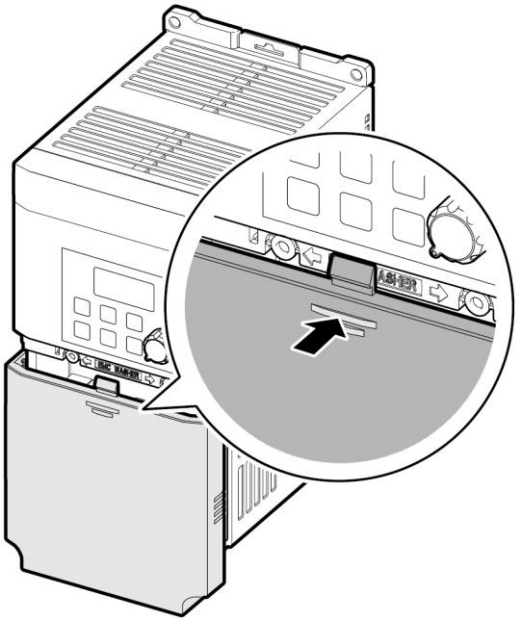

2 Remove the cover by lifting it upward from the bottom and moving it away from the front of the inverter.

Note

If you have installed the remote keypad, remove the plastic cover under the lower-right part of the control terminal cover, and then connect the remote keypad signal to the RJ-45 connector.

Step 2 Ground Connection

Remove the control terminal cover, and then follow the instructions below to install the ground connection for the inverter.

3 Locate the ground terminal and connect an appropriately rated ground cable to the terminals. Refer to *1.5 Cable Selection* on page*11* to find the appropriate cable specification for your installation.

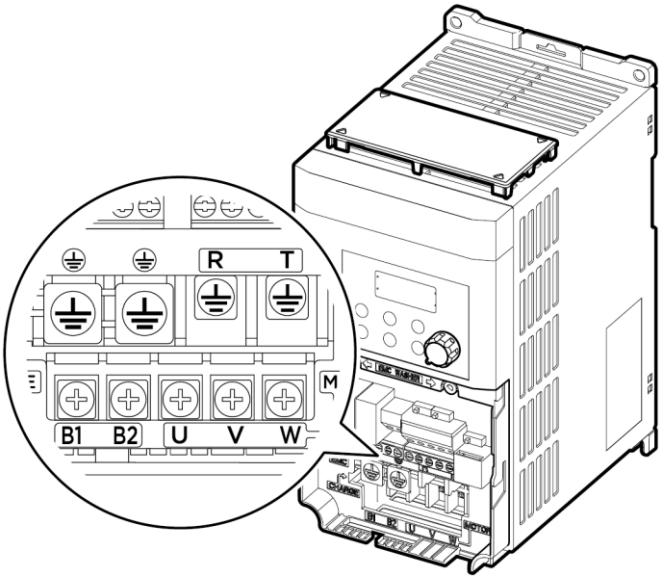

4 Connect the other ends of the ground cables to the supply earth (ground) terminal.

Note

Class 3 grounding is required. Resistance to ground must be < 100Ω.

⚠ Warning

Install ground connections for the inverter and the motor by following the correct specifications to ensure safe and accurate operation. Using the inverter and the motor without the specified grounding connections may result in electric shock.

Step3 Power Terminal Wiring

The following illustration shows the terminal layout on the power terminal block. Refer to the detailed descriptions to understand the function and location of each terminal before making wiring connections. Ensure that the cables selected meet or exceed the specifications in *1.5 Cable Selection* on page*11* before installing them.

Caution

- Tighten terminal screws to their specified torque. Loose terminal screws may allow the cables to disconnect and cause short circuit or inverter failure. Over tightening terminal screws may damage the terminals and cause short circuits and malfunctions.
- Use copper cables rated for 600V, 75℃ for power terminal wiring.
- Use copper cables rated for 300V, 75℃ for control terminal wiring.
- When making wiring connections at the power terminals, do not make a bi-wired connection to a single terminal.
- Power supply cables must be connected to the R and T terminals. Connecting power cables to the U, V, and W terminals will cause internal damage to the inverter. Connect motors to the U, V, and W terminals. Phase sequence arrangement is not necessary.

Attention

- Appliquer des couples de marche aux vis des bornes. Des vis desserrées peuvent provoquer des courts-circuits et des dysfonctionnements. Ne pas trop serrer la vis, car cela risqué d'endommager les bornes et de provoquer des courts-circuits et des dysfonctionnements. Utiliser uniquement des fils de cuivre avec une valeur nominale de 600 V, 75 ℃ pour le câblage de la borne d'alimentation, et une valeur nominale de 300 V, 75 ℃ pour le câblage de la borne de commande.
- Ne jamais connecter deux câbles à une borne lors du câblage de l'alimentation.
- Les câblages de l'alimentation électrique doivent être connectés aux bornes R, T. Leur connexion aux bornes U, V et W provoque des dommages internes à l'onduleur. Le moteur doit être raccordé aux bornes U, V et W. L'arrangement de l'ordre de phase n'est pas nécessaire.

0.1~0.2 kW (Single Phase)

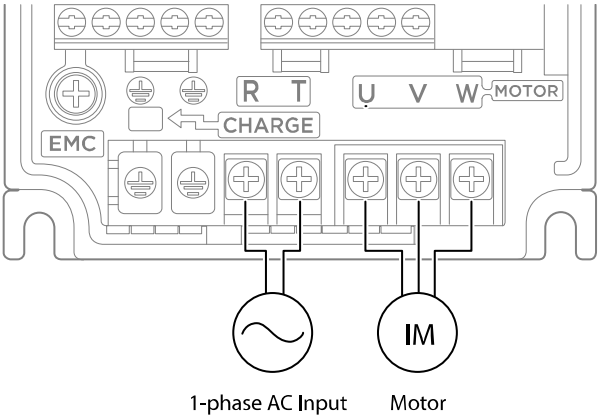

0.4–0.75 kW (Single Phase)

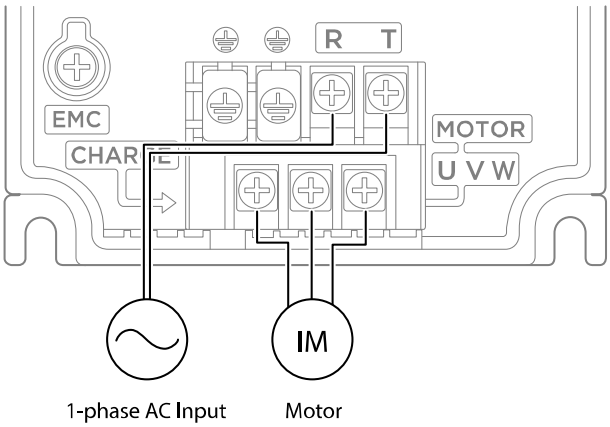

1.5-2.2 kW (Single Phase)

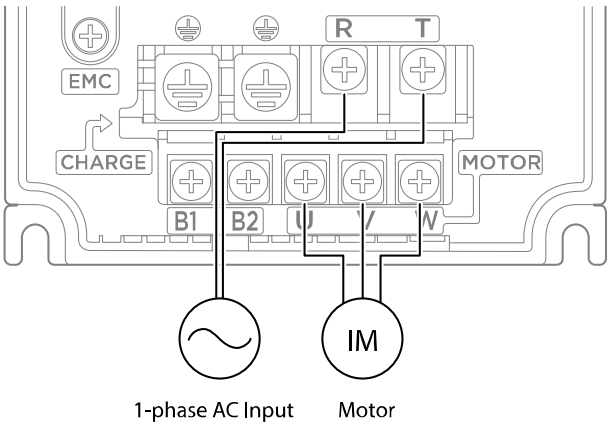

Power Terminal Labels and Descriptions

Terminal Labels	Name	Description
R/T	AC power input terminal	Mains supply AC power connections.
B1/B2(1.5kW~2.2kW)	Brake resistor terminals	Brake resistor wiring connection.
U/V/W	Motor output terminals	3-phase induction motor wiring connections.

Note

- Use STP (Shielded Twisted Pair) cables to connect a remotely located motor with the inverter. Do not use 3 core cables.
- Ensure that the total cable length does not exceed 165ft (50m).
- Long cable runs can cause reduced motor torque in low frequency applications due to voltage drop. Long cable runs also increase a circuit's susceptibility to stray capacitance and may trigger over-current protection devices or result in malfunction of equipment connected to the inverter.
- Voltage drop is calculated by using the following formula:
  Voltage Drop (V) = [√3 X cable resistance (mΩ/m) X cable length (m) X current(A)] / 1000
- Use cables with the largest possible cross-sectional area to ensure that voltage drop is minimized over long cable runs. Lowering the carrier frequency and installing a micro surge filter may also help to reduce voltage drop.

Distance	< 165 ft (50 m)	< 330 ft (100 m)	> 330 ft (100 m)
Allowed Carrier Frequency	< 15 kHz	< 5 kHz	< 2.5 kHz

⚠ Warning

Do not connect power to the inverter until installation has been fully completed and the inverter is ready to be operated. Doing so may result in electric shock.

Caution

- Power supply cables must be connected to the R and T terminals. Connecting power cables to other terminals will damage the inverter.
- Use insulated ring lugs when connecting cables to R/T and U/V/W terminals.
- The inverter's power terminal connections can cause harmonics that may interfere with other communication devices located near to the inverter. To reduce interference the installation of noise filters or line filters may be required.
- To avoid circuit interruption or damaging connected equipment, do not install phase-advanced condensers, surge protection, or electronic noise filters on the output side of the inverter.
- To avoid circuit interruption or damaging connected equipment, do not install magnetic contactors on the output side of the inverter.

Step 4 Control Terminal Wiring

The illustrations below show the detailed layout of control wiring terminals, and control board switches. Refer to the detailed information provided below and *1.5 Cable Selection* on page *11* before installing control terminal wiring and ensure that the cables used meet the required specifications.

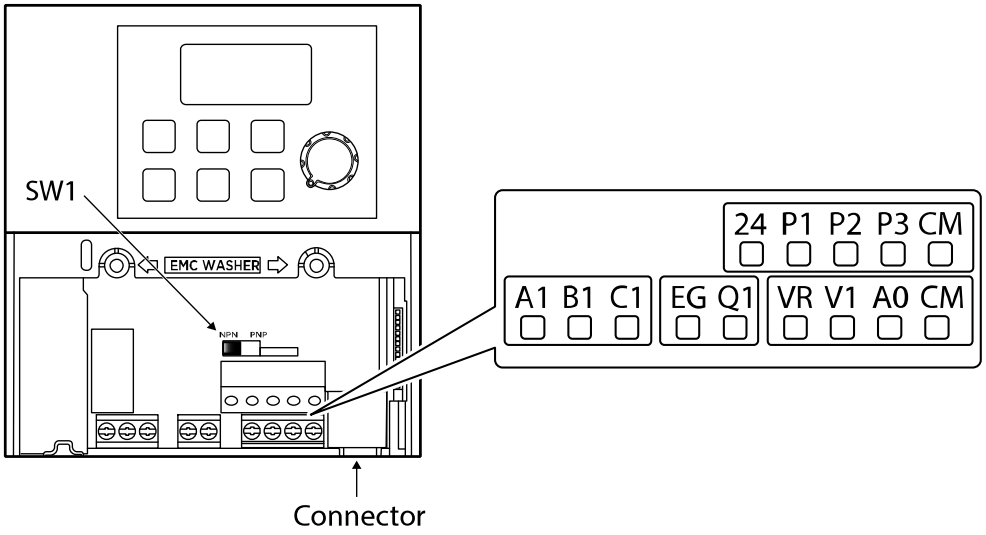

<Standard I/O>

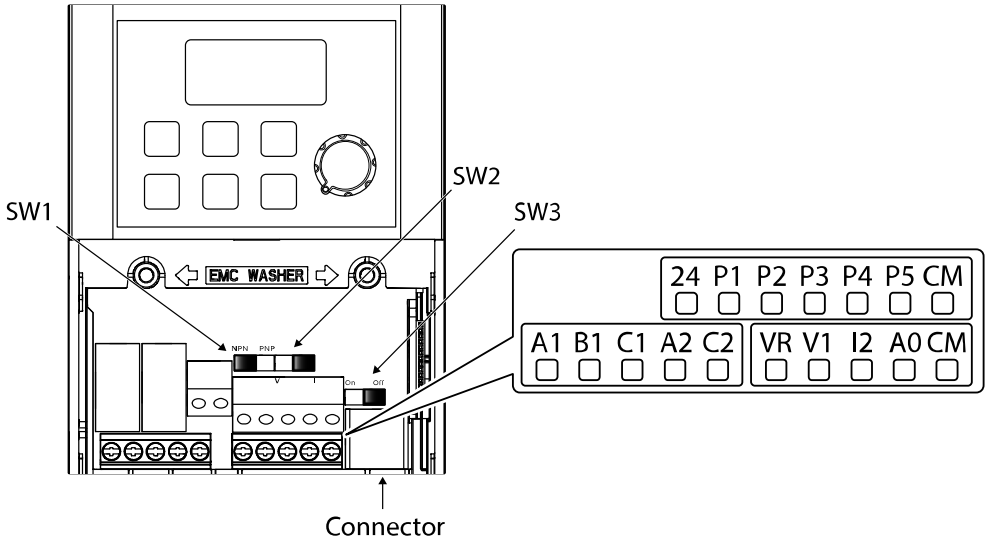

<Advanced I/O>

Control Board Switches

Switch	Description
SW1	NPN/PNP mode selection switch
SW2(Advanced I/O)	Analog voltage/current input terminal (I2) selection switch
SW3(Advanced I/O)	Terminating resistor selection switch

Connectors

Connector	Description
Connector	Connection of the remote keypad, Smart Copier, or RS 485 communication (Advanced IO)

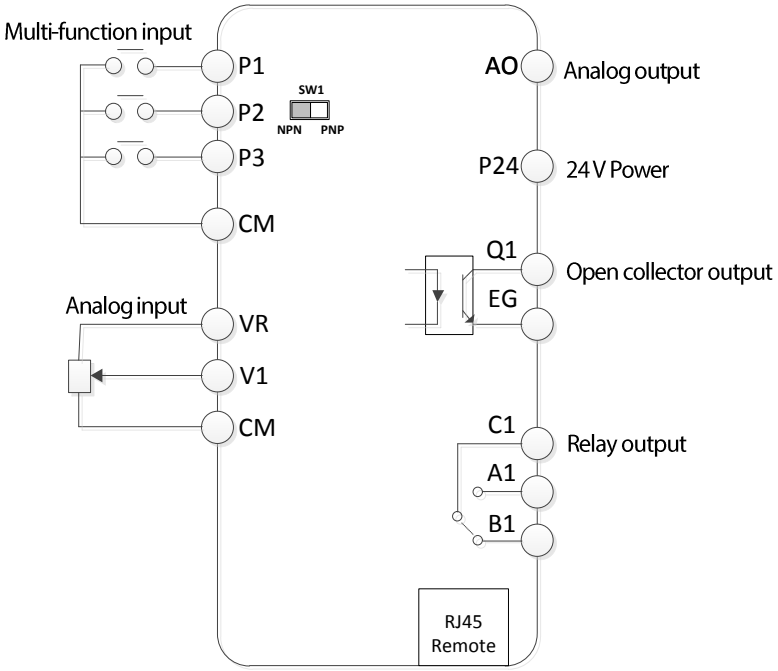

<Standard I/O>

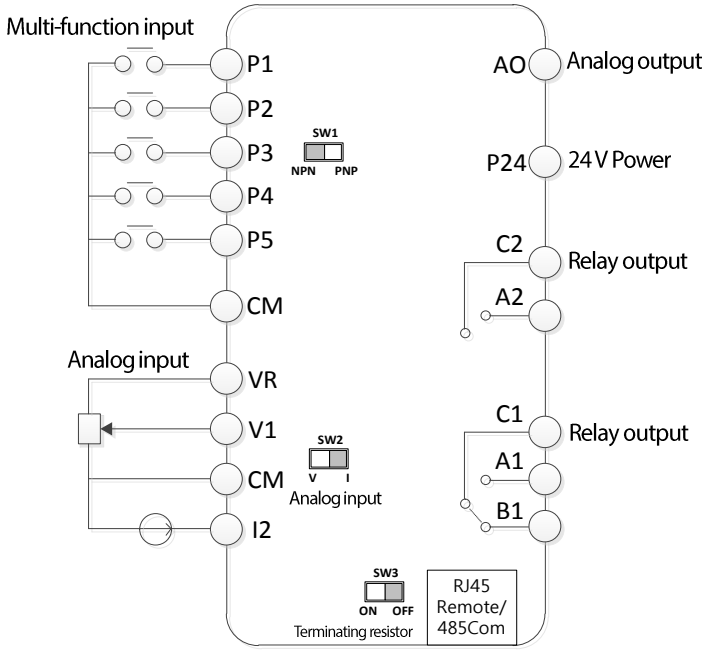

<Advanced I/O>

Input Terminal Labels and Descriptions

Function	Label	Name	Description
Multi-function terminal configuration	P1–P5	Multi-function Input 1–5	Configurable for multi-function input terminals. Factory default terminals and setup are as follows: • P1: Fx • P2: Rx • P3: Emergency stop trip • P4: Fault reset (RESET) • P5: Jog operation command (JOG) (P1–P3 are available for standard I/O.)
	CM	Common Sequence	Common terminal for analog terminal inputs and outputs.
Analog input configuration	VR	Potentiometer frequency reference input	Used to setup or modify a frequency reference via analog voltage or current input. • Maximum Voltage Output: 12V • Maximum Current Output: 100mA, • Potentiometer: 1–5kΩ
	V1	Voltage input for frequency reference input	Used to setup or modify a frequency reference via analog voltage input terminal. • Unipolar: 0–10V (12V Max.)
	I2 (Advanced I/O)	Voltage/current input for frequency reference input	Used to setup or modify a frequency reference via analog voltage or current input terminals. Switch between voltage (V2) and current (I2) modes using a control board switch (SW2). V Mode : • Unipolar: 0–10 V (12 V Max.) I Mode : • Input current : 4–20 mA

Output/Communication Terminal Labels and Descriptions

Function	Label	Name	Description
Analog output	AO	Voltage Output	Used to send inverter output information to external devices: output frequency, output current, output voltage, or a DC voltage. • Output voltage: 0–10 V • Maximum output voltage/current: 10 V, 10 mA • Factory default output: Output frequency
Digital output	Q1 (Standard I/O)	Multi-functional (open collector)	DC 26 V, 100 mA or less
	EG (Standard I/O)	Common	Common ground contact for an open collector (with external power source)
	24	External 24 V power source	Maximum output current: 50 mA
	A1/C1/B1	Fault signal output	Sends out alarm signals when the inverter's safety features are activated (AC 250V <1A, DC 30V < 1A). • Fault condition: A1 and C1 contacts are connected (B1 and C1 open connection) • Normal operation: B1 and C1 contacts are connected (A1 and C1 open connection)
	A2/C2 (Advanced I/O)	Fault signal output	Sends out alarm signals when the inverter's safety features are activated (AC 250V <1A, DC 30V < 1A). • Fault condition: A2 and C2 contacts are connected • Normal operation: A2 and C2 contacts are open connection
Communication	RJ45	Remote keypad signal line	Used to send or receive the remote keypad (optional) signals.
		RS-485 signal line (Advanced I/O)	Used to send or receive RS-485 signals. Refer to *8 RS-485 Communication Features* on page *171*.

Preinsulated Crimp Terminal Connectors (Bootlace Ferrule)

Use preinsulated crimp terminal connectors to increase reliability of the control terminal wiring. Refer to the specifications below to determine the crimp terminals to fit various cable sizes.

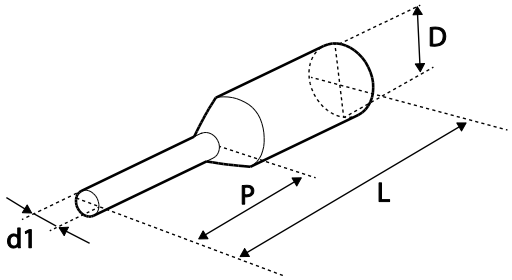

P/N	Cable Spec.		Dimensions (inches/mm)				Manufacturer
	AWG	mm^2	L*	P	d1	D	
CE002506	26	0.25	0.41/10.4	0.24 / 6.0	0.04 / 1.1	0.10/2.5	JEONO (Jeono Electric, http://www.jeono.com/)
CE002508			0.49/12.4	0.32 / 8.0			
CE005006	22	0.50	0.47/12.0	0.24 / 6.0	0.05 / 1.3	0.125/3.2	
CE007506	20	0.75	0.47/12.0	0.24 / 6.0	0.06 / 1.5	0.13/3.4	

* If the length (L) of the crimp terminals exceeds 0.5” (12.7mm) after wiring, the control terminal cover may not close fully.

To connect cables to the control terminals without using crimp terminals, refer to the following illustration detailing the correct length of exposed conductor at the end of the control cable.

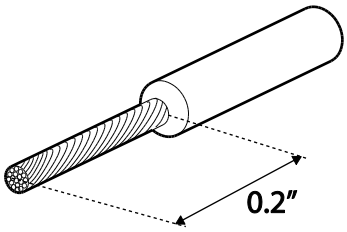

Caution

Ensure that there is no debris entered inside the inverter.

Note

- While making wiring connections at the control terminals, ensure that the total cable length does not exceed 165ft (50m).
- Ensure that the length of any safety related wiring does not exceed 100 ft (30 m).
- Ensure that the cable length between a remote keypad and the inverter does not exceed 1 0ft (3.04 m). Cable connections longer than 10 ft (3.04 m) may cause signal errors.
- Use ferrite material to protect signal cables from electro-magnetic interference.
- Take care when supporting cables using cable ties, to apply the cable ties no closer than 6 inches from the inverter. This provides sufficient access to fully close the front cover.
- When making control terminal cable connections, use a small flat-tip screw driver (0.1in wide (2.5mm) and 0.015in thick (0.4mm) at the tip).

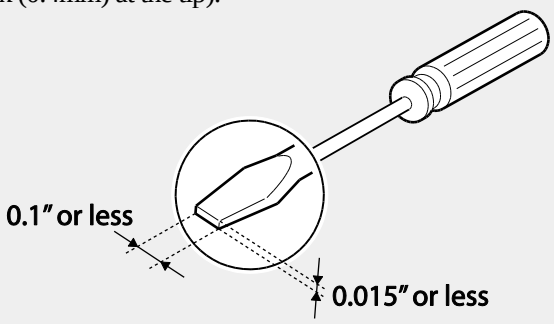

⚠ Warning

When making control terminal cable connections, ensure that the inverter's power is turned off.

Step 5 PNP/NPN Mode Selection

The M100 inverter supports both PNP (Source) and NPN (Sink) modes for sequence inputs at the terminal. Select an appropriate mode to suit requirements using the PNP/NPN selection switch (SW1) on the control board. Refer to the following information for detailed applications.

PNP Mode (Source)

Select PNP using the PNP/NPN selection switch (SW1). Note that the factory default setting is NPN mode. CM is the common ground terminal for all analog inputs at the terminal, and P24 is 24V internal source. If you are using an external 24V source, build a circuit that connects the external source (-) and the CM terminal.

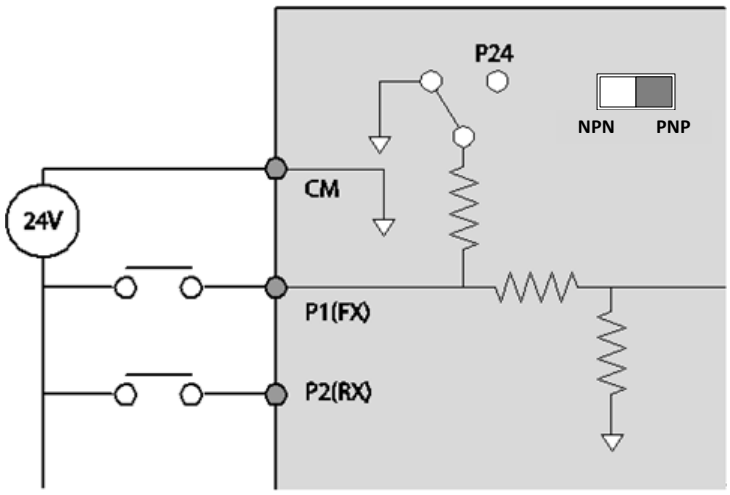

NPN Mode (Sink)

Select NPN using the PNP/NPN selection switch (SW1). CM is the common ground terminal for all analog inputs at the terminal, and P24 is 24V internal source.

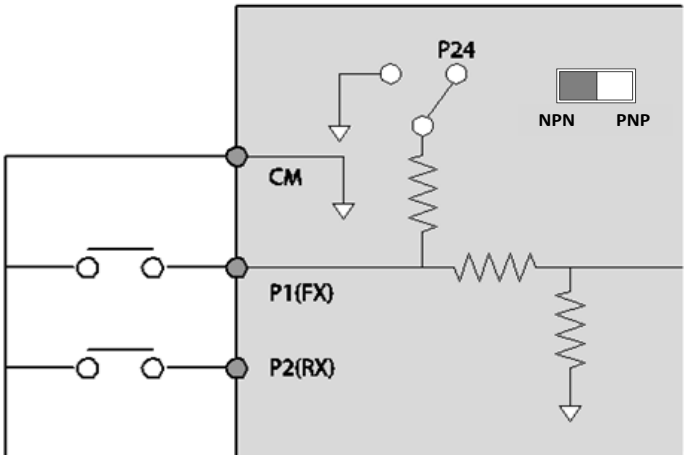

Step 6 Disabling the EMC Filter for Power Sources with Asymmetrical Grounding

An EMC filter prevents electromagnetic interference by reducing radio emissions from the inverter. EMC filter use is not always recommended, as it increases leakage current. If an inverter uses a power source with an asymmetrical grounding connection, the EMC filter MUST be turned off.

Asymmetrical Grounding Connection			
One phase of a delta connection is grounded	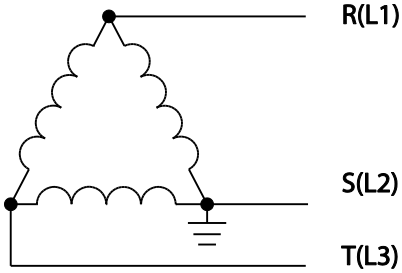	Intermediate grounding point on one phase of a delta connection	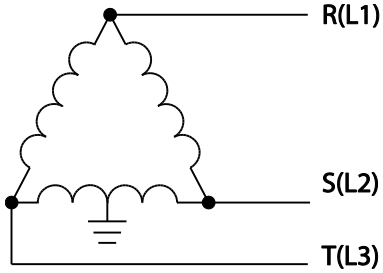
The end of a single phase is grounded	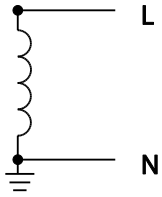	A 3-phase connection without grounding	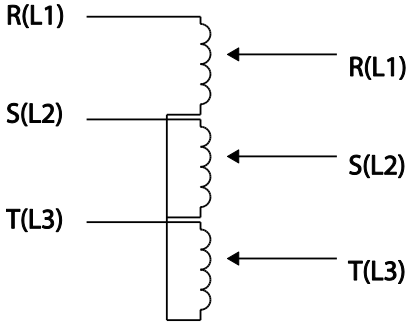

⚠ Danger

- Do not activate the EMC filter if the inverter uses a power source with an asymmetrical grounding structure, for example a grounded delta connection. Personal injury or death by electric shock may result.
- Wait at least 10 minutes before opening the covers and exposing the terminal connections. Before starting work on the inverter, test the connections to ensure all DC voltage has been fully discharged. Personal injury or death by electric shock may result.

Before using the inverter, confirm the power supply's grounding system. Disable the EMC filter if the power source has an asymmetrical grounding connection. Check the location of the EMC filter on/off screw and attach the plastic washer to the screw under the control terminal block.

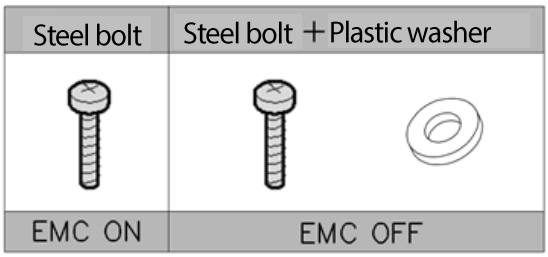

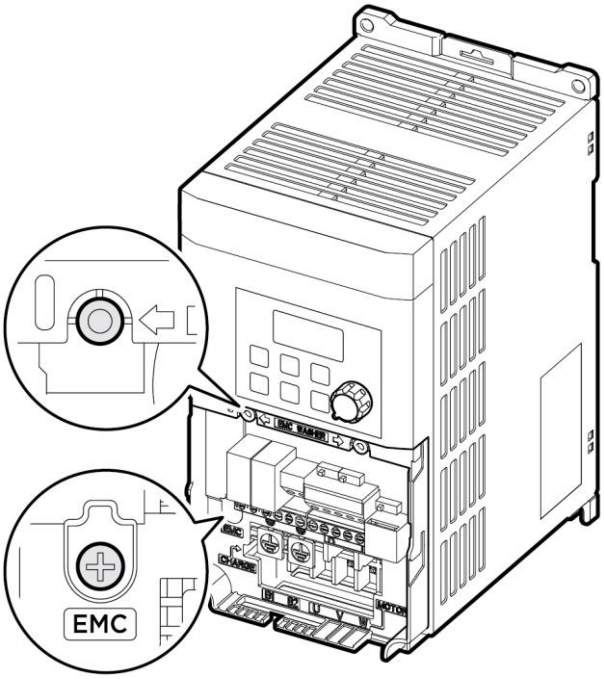

Step 7 Re-assembling the Cover

Re-assemble the cover after completing the wiring and basic configuration.

2.3 Post-Installation Checklist

After completing the installation, check the items in the following table to make sure that the inverter has been safely and correctly installed.

Items	Check Point	Result
Installation Location/Power I/O Verification	Is the installation location appropriate?	
	Does the environment meet the inverter's operating conditions?	
	Does the power source match the inverter's rated input?	
	Is the inverter's rated output sufficient to supply the equipment?	
Power Terminal Wiring	Is a circuit breaker installed on the input side of the inverter?	
	Is the circuit breaker correctly rated?	
	Are the power source cables correctly connected to the R/S/T terminals of the inverter? (Caution: connecting the power source to the U/V/W terminals may damage the inverter.)	
	Are the motor output cables connected in the correct phase rotation (U/V/W)? (Caution: motors will rotate in reverse direction if three phase cables are not wired in the correct rotation.)	
	Are the cables used in the power terminal connections correctly rated?	
	Is the inverter grounded correctly?	
	Are the power terminal screws and the ground terminal screws tightened to their specified torques?	
	Are the overload protection circuits installed correctly on the motors (if multiple motors are run using one inverter)?	
	Is the inverter separated from the power source by a magnetic contactor (if a braking resistor is in use)?	
	Are advanced-phase capacitors, surge protection and electromagnetic interference filters installed correctly? (These devices MUST not be installed on the output side of the inverter.)	

Items	Check Point	Result
Control Terminal Wiring	Are STP (shielded twisted pair) cables used for control terminal wiring?	
	Is the shielding of the STP wiring properly grounded?	
	If 3-wire operation is required, are the multi-function input terminals defined prior to the installation of the control wiring connections?	
	Are the control cables properly wired?	
	Are the control terminal screws tightened to their specified torques?	
	Is the total cable length of all control wiring < 165 ft (100 m)?	
	Is the total length of safety wiring < 100 ft (30 m)?	
Miscellaneous	Are optional cards connected correctly?	
	Is there any debris left inside the inverter?	
	Are any cables contacting adjacent terminals, creating a potential short circuit risk?	
	Are the control terminal connections separated from the power terminal connections?	
	Have the capacitors been replaced if they have been in use for > 2 years?	
	Has the fan been replaced if it has been in use for > 3 years?	
	Has a fuse been installed for the power source?	
	Are the connections to the motor separated from other connections?	

Note

STP (Shielded Twisted Pair) cable has a highly conductive, shielded screen around twisted cable pairs. STP cables protect conductors from electromagnetic interference.

2.4 Test Run

After the post-installation checklist has been completed, follow the instructions below to test the inverter.

1 Turn on the power supply to the inverter. Ensure that the keypad display light is on.

2 Select the command source.

3 Set a frequency reference, and then check the following:

- If V1 is selected as the frequency reference source, does the reference change according to the input voltage at VR?
- If I2 (V)[1)] is selected as the frequency reference source, is the voltage/current selector switch (SW2) [1)] set to voltage??
- If I2 (V) [1)] is selected as the frequency reference source, does the reference change according to the input voltage at VR?
- If I2 (I) [1)] is selected as the frequency reference source, is the voltage/current selector switch (SW2) [1)] set to current?
- If I2 (I) [1)] is selected as the frequency reference source, does the reference change according to the input current?

4 Set the acceleration and deceleration time.

5 Start the motor and check the following:

- Ensure that the motor rotates in the correct direction (refer to the note below).
- Ensure that the motor accelerates and decelerates according to the set times, and that the motor speed reaches the frequency reference.

1) Available only for models equipped with advanced I/O.

Verifying the Motor Rotation

1. On the keypad, set the drv (Frequency reference source) code in the Operation group to 0 (Keypad).
2. Set a frequency reference.
3. Press the [RUN] key. Motor starts forward operation.
4. Observe the motor's rotation from the load side and ensure that the motor rotates counterclockwise (forward).

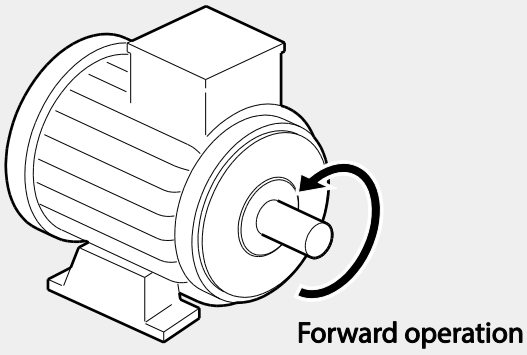

Caution

- Check the parameter settings before running the inverter. Parameter settings may have to be adjusted depending on the load.
- To avoid damaging the inverter, do not supply the inverter with an input voltage that exceeds the rated voltage for the equipment.
- Before running the motor at maximum speed, confirm the motor's rated capacity. As inverters can be used to easily increase motor speed, use caution to ensure that motor speeds do not accidently exceed the motor's rated capacity.

3 Learning to Perform Basic Operations

This chapter describes the keypad layout and functions. It also introduces parameter groups and codes, required to perform basic operations. The chapter also outlines the correct operation of the inverter before advancing to more complex applications. Examples are provided to demonstrate how the inverter actually operates.

3.1 About the Keypad

The keypad is composed of two main components – the display and the operation (input) keys. Refer to the following illustration to identify part names and functions.

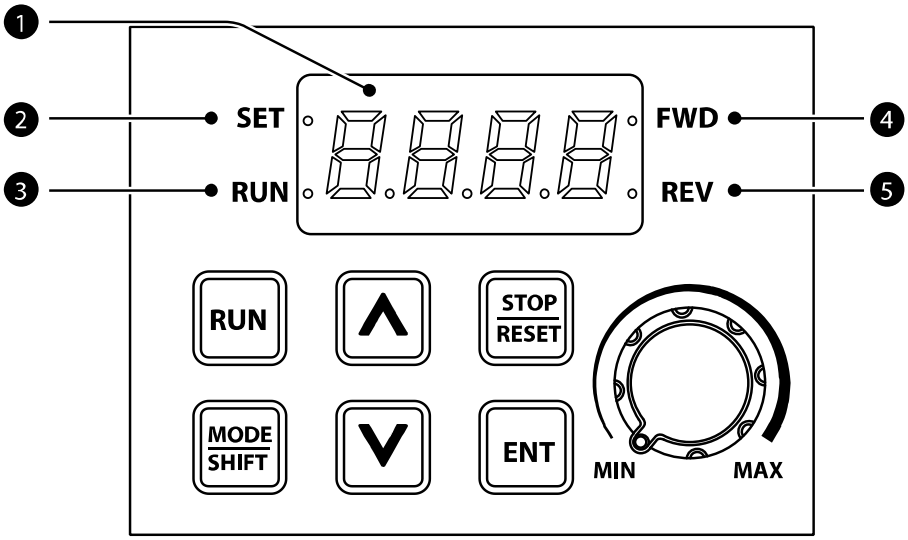

3.1.1 About the Display

The following table lists display part names and their functions.

No.	Name	Function
❶	7-Segment Display	Displays current operational status and parameter information.
❷	SET Indicator	LED flashes during parameter configuration.
❸	RUN Indicator	LED turns on (steady) during an operation, and flashes during acceleration or deceleration.
❹	FWD Indicator	LED turns on (steady) during forward operation.
❺	REV Indicator	LED turns on (steady) during reverse operation.

The table below lists the way that the keypad displays characters (letters and numbers).

Display	Number/ character	Display	Number/ character	Display	Number/ character	Display	Number/ character
0	0	A	A	K	K	U	U
1	1	b	B	L	L	v	V
2	2	C	C	n	M	W	W
3	3	d	D	n	N	X	X
4	4	E	E	O	O	Y	Y
5	5	F	F	P	P	Z	Z
6	6	G	G	q	Q		0 (bit)
7	7	H	H	r	R		1 (bit)
8	8	I	I	S	S	-	-
9	9	J	J	t	T	-	-

3.1.2 Operation Keys

The following table lists the names and functions of the keypad's operation keys.

Key	Name	Description
RUN	[RUN] key	Used to run the inverter (inputs a RUN command).
STOP RESET	[STOP/RESET] key	STOP: stops the inverter. RESET: resets the inverter following fault or failure condition.
▲ ▼	[▲] key, [▼] key	Switch between codes, or to increase or decrease parameter values.
MODE SHIFT	[MODE/SHIFT] key	Switch between groups, or to move the cursor during parameter setup or modification.
ENT	[ENTER] key	Used to enter the parameter setting mode, apply the set parameter, and enter the operation information screen from the fault notice screen when a fault occurs.
MIN MAX	[Volume] key	Used to set the operation frequency.

3.1.3 Control Menu

The M100 inverter control menu uses the following groups.

Group	Display	Description
Operation	-	Configures basic parameters for inverter operation.
Drive (**Dr**ive)	dr	Configures parameters for basic operations. These include jog operation, torque boost, and other parameters.
Basic (**Ba**sic)	bA	Configures basic parameters, including motor-related parameters and multi-step frequencies.
Advanced (**Ad**vanced)	Ad	Configure acceleration or deceleration patterns and to setup frequency limits.
Control (**Co**ntrol)	Cn	Configures functions such as carrier frequency or speed search.
Input Terminal (**In**put)	In	Configures input terminal–related features, including digital multi–functional inputs and analog inputs.
Output Terminal (**Ou**tput)	ou	Configures output terminal–related features such as relays and analog outputs.
Communication (**Co**mmunication)	Cm	Configures communication features for RS-485 or other communication options. ※Available only for models equipped with advanced I/O.
Application (**Ap**plication)	AP	Configures PID control–related sequences and operations.
Protection (**Pr**otection)	Pr	Configures motor or inverter protection features.
Secondary Motor (**2nd Mo**tor)	M2	Configures secondary motor related features. ※The secondary motor (M2) group appears on the keypad only when one of the multi-function input terminals (standard I/O model: In65-67, advanced I/O model: In65-69) has been set to 12 (Secondary motor).
Configuration (**Co**n**f**iguration)	CF	Configures various features such as parameter setting,

3.2 Learning to Use the Keypad

3.2.1 Group Selection

※ Groups, except the Operation group, are not displayed on the group list and not accessible as factory default to prevent parameter input error. To display and access all groups, go to the OGr code in the Operation group and set the parameter to 1.

You can move between groups in only one direction.

Step	Instruction	Keypad Display
1	• '0.00'[1], the initial code of the Operation group, is displayed when the inverter is turned on. • Press the [MODE] key.	0.00
2	• 'dr 0', the initial code of the Drive (dr) group, is displayed. • Press the [MODE] key.	dr 0
3	• 'bA 0', the initial code of the Basic (bA) group, is displayed. • Press the [MODE] key.	bA 0
4	• 'Ad 0', the initial code of the Advanced (Ad) group, is displayed. • Press the [MODE] key.	Ad 0
5	• 'Cn 0', the initial code of the Control (Cn) group, is displayed. • Press the [MODE] key.	Cn 0
6	• 'In 0', the initial code of the Input Terminal, is displayed. • Press the [MODE] key.	In 0
7	• 'OU 0', the initial code of the Output Terminal, is displayed. • Press the [MODE] key.	OU 0
8	• 'CM 0', the initial code of the Communication group (CM) is displayed. • Press the [MODE] key. ※ Available only for models equipped with advanced I/O.	CM 0

Step	Instruction	Keypad Display
9	• 'AP 0', the initial code of the Application (AP) group, is displayed. • Press the [MODE] key.	AP 0
10	• 'Pr 0', the initial code of the Protection (Pr) group, is displayed. • Press the [MODE] key.	Pr 0
11	• 'M2-0', the initial code of the Secondary Motor group, is displayed. • Press the [MODE] key. ※This group is available when the secondary motor function is enabled. ※To enable the secondary motor function, set one of the multi-function input terminal's codes (standard I/O model: In 65-67, advanced I/O model: In 65-69) to I2 (2nd Motor).	M2 0
12	• 'CF 0', the initial code of the Configuration (CF) group, is displayed. • Press the [MODE] key.	CF 0
13	• Press the [MODE] key at the Configuration group, and then '0.00' (the initial code of the Operation group) will be displayed.	0.00

1) You can set reference frequencies at the initial code of the Operation group. The initial code is set to 0.00 as factory default. After you set the frequency reference, the set value will be displayed.

3.2.2 Code Selection

Follow the example below to learn how to switch between codes. This example applies to all groups whenever you would like to switch to a specific code number.

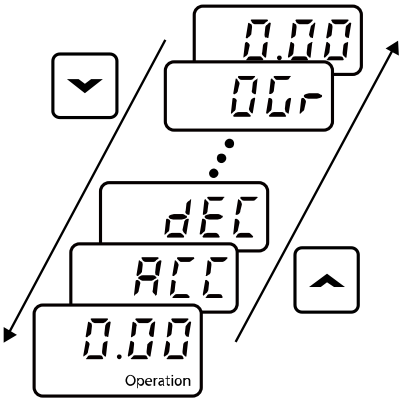

Step	Instruction	Keypad Display
1	• ‘0.00’, the initial code of the Operation group, is displayed. • Press the [▲] key.	0.00
2	• ‘ACC’, the second code of the Operation group, will be displayed. • Press the [▲] key.	ACC
3	• ‘dEC’, the third code of the Operation group, will be displayed. • Press the [▲] key.	dEC
4	• ‘OGr,’ the last code of the Operation group will be displayed. • Press the [▲] key again.	OGr
5	The initial code ‘0.00’ will be displayed again.	0.00

Note

Press the [▼] key to switch between codes in the opposite direction.

3.2.3 Navigating Directly to Different Codes

The following example details navigating to code Ad12, from the initial code in the Advanced group (Ad 0). This example applies to all groups whenever you would like to navigate to a specific code number.

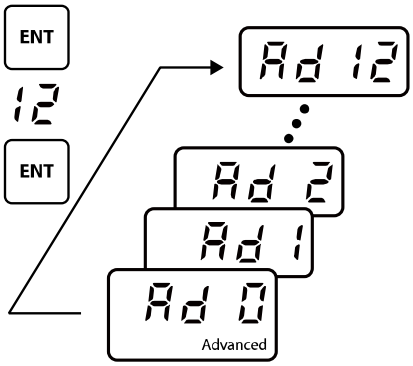

Step	Instruction	Keypad Display
1	• 'Ad 0', the initial code of the Advanced (Ad) group, is displayed. • Press the [ENT] key.	Ad 0
2	• The code often used for the group will be displayed as default. For example, '24' is displayed as a default code of the Ad group. • The first digit will be flashing. This indicates the flashing value is ready to be modified. Press the [▼] key to set the first digit to '2'.	24
3	• Press the [MODE] key. The cursor will move to the left and the tenth digit will be flashing. • Press the [▼] key to change '2' to '1'.	22
4	• The code destination '12' will be displayed. • Press the [ENT] key.	12
5	The 12th code of the Advanced (Ad) group will be displayed.	Ad 12

Note

This example applies to all groups except the Operation group.

3.2.4 Switching to a Different Code

The following example details switching to code Ad 12 from Ad 1. This example applies to all groups whenever you would like to switch to a specific code number.

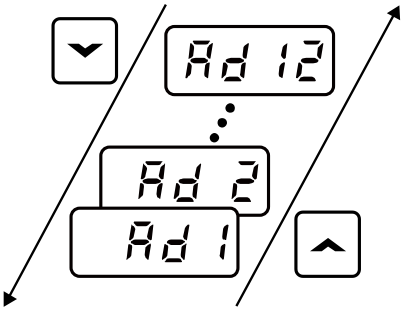

Step	Instruction	Keypad Display
1	• The 1st code of the Advanced (Ad) group, is displayed. • Press the [ENT] key until Ad12 is displayed.	Ad 1
2	The 12th code of the Advanced (Ad) group will be displayed.	Ad 12

Note

In some instances, the code number increases or decreases by more than 1 when you press the [▲] or [▼] key, as some codes have no assigned function or may not be accessible. This is when a new function is required to be assigned. Refer to *9 Table of Functions* on page *189* for more information.

Example) When you switch the code of the Advanced group while the Ad24 (Frequency upper/lower limit options) code is set to 0 (No), the Ad25 (Frequency upper limit) and Ad26 (Frequency lower limit) codes are not accessible.
When the Ad24 code is set to 1 (Yes), the Ad25 and Ad26 codes are accessible.

3.2.5 Setting Parameter Values

Enable or disable features by setting or modifying parameter values for different codes. Directly enter setting values, such as frequency references, supply voltages, and motor speeds. Follow the instructions below to learn to set or modify parameter values.

Step	Instruction	Keypad Display
1	• Select the group and code to setup and modify parameter settings, and then press the [ENT] key. • Each digit of the parameter value will be flashing. This indicates the flashing values are ready to be modified.	5.0
2	Press the [▲] or [▼] key to move the cursor to the number that you would like to modify and then press the [MODE] key.	6.0 5.0 4.0
3	• The parameter value will flash on the display. • Press the [ENT] key.	4.0
4	Press the [ENT] key again to save the change.	4.0

Note

A flashing number on the display indicates that the keypad is waiting for an input from the user. Changes will be saved when the [ENT] key is pressed while the number is flashing. The setting change will be canceled if you press any other key.

3.3 Actual Application Examples

3.3.1 Acceleration Time Configuration

The following is an example demonstrating how to modify the ACC (Acceleration time) code value (from 5.0 to 16.0) from the Operation group.

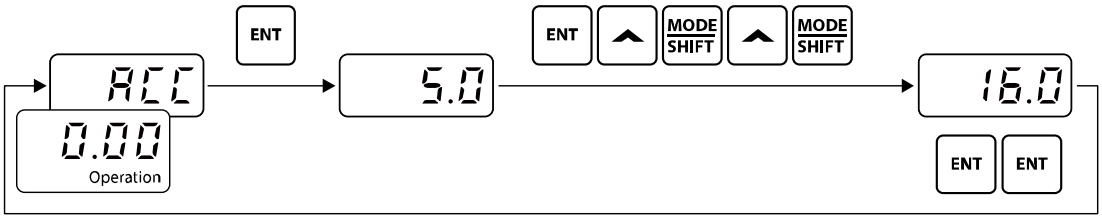

Step	Instruction	Keypad Display
1	• The initial code of the Operation group is displayed. • Press the [▲] key.	0.00
2	• ACC (acceleration time), the second code of the Operation group, will be displayed. • Press the [ENT] key.	ACC
3	• '5.0' will be displayed and '0' will be flashing. • Press the [MODE] key.	5.0
4	• '5' will be flashing. This indicates the flashing value '5' is ready to be modified. • Press the [▲] key.	5.0
5	• The parameter value is set to '6.0'. • Press the [MODE] key.	6.0
6	• '0' is displayed as the first digit and will be flashing. • Press the [▲] key.	06.0
7	• '16.0 ' will be displayed. • '16.0' will be flashing[1]. • Press the [ENT] key. • Press the [ENT] key again.	16.0
8	ACC will be displayed and the acceleration time is set to '16.0'.	ACC

1) You can cancel setting the parameter by pressing any key except the [ENT] key while '16.0' is flashing.

3.3.2 Frequency Reference Configuration

The following is an example to demonstrate configuring a frequency reference of 30.05 (Hz) from the first code in the Operation group (0.00).

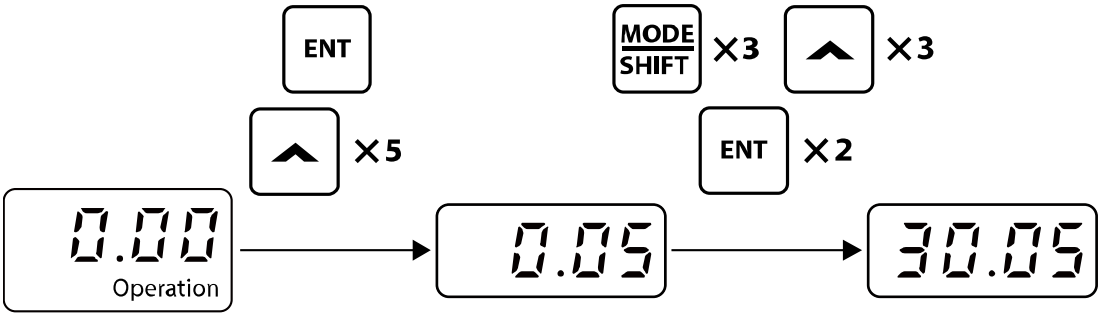

Step	Instruction	Keypad Display
1	• The initial code of the Operation group is displayed. • Press the [ENT] key.	00.0
2	• The digit in the second decimal place becomes editable. • Press the [▲] key until the digit in the second decimal place reaches ‘5’.	0.00
3	Press the [MODE] key.	0.05
4	• The cursor is moved to the left. • Press the [MODE] key.	0.05
5	Press the [MODE] key.	0.05
6	Press the [▲] key to set the first digit to ‘3’.	00.05
7	• Press the [ENT] key. • ‘30.05’ will flash.	30.05
8	• Press the [ENT] key. • The value will stop flashing. This indicates that the frequency reference is set to ‘30.05’.	30.05

Note

The M100 inverter keypad display can display up to 4 digits. However, 5-digit figures can be used and are accessed by pressing the [MODE] key, to allow keypad input.
In step 7, you can cancel setting the parameter by pressing any key except the [ENT] key while ’30.05’ is flashing.

3.3.3 Frequency Setting

The following is an example demonstrating how to modify the Ad 27 code value (from 0 to 1) from the Advanced group.

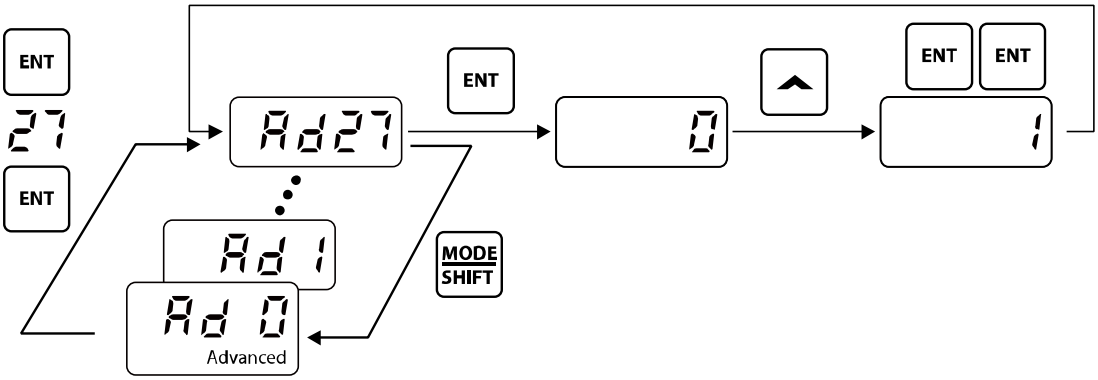

Step	Instruction	Keypad Display
1	• 'Ad 0', the initial code of the Advanced group, is displayed. • Press the [ENT] key.	Ad 0
2	• The code value '24' will be displayed. • Press the [▲] key until the first digit reaches '7'.	24
3	• The code value '27' will be displayed. • Press the [ENT] key.	27
4	• 'Ad27' will be displayed. • Press the [ENT] key.	Ad27
5	• The 27th code value '0' is displayed. • Press the [▲] key until the code value reaches '1'.	0
6	Press the [ENT] key.	1
7	The code value '1' will flash and then the 'Ad 27' code will be displayed.	Ad27

3.3.4 Initializing All Parameters

The following example demonstrates parameter initialization using the 93rd code (CF 93) of the Configuration group. Once executed, parameter initialization will delete all modified values for all codes and groups.

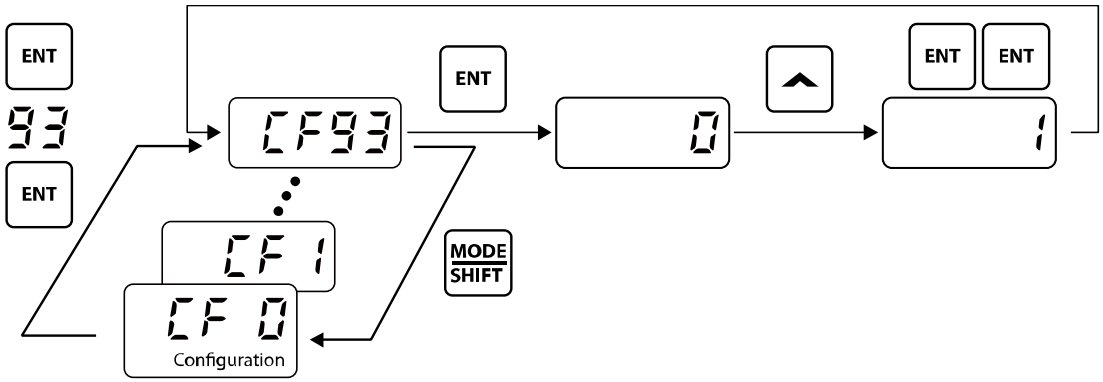

Step	Instruction	Keypad Display
1	• The initial code of the Configuration (CF) group is displayed • Press the [ENT] key.	CF 0
2	• The current value (‘1’) will be displayed. • Press the [▲] key until ‘3’ is displayed.	1
3	• The code value ‘3’ will be displayed. • Press the [MODE] key.	3
4	• ‘0’ will be displayed as the first digit and will be flashing. This indicates the first digit is ready to be modified. • Press the [▲] key until ‘9’ is displayed.	03
5	• ’93’ will be displayed. • Press the [ENT] key.	93
6	• ‘CF93’ will be displayed. • Press the [ENT] key.	CF93
7	• The parameter initialization will be in progress. • Press the [▲] key	0
8	Press the [ENT] key. After the code value flashes, press the [ENT] key again.	1
9	The code number is displayed again after the initialization is complete.	CF93

3.3.5 Frequency Setting (Keypad) and Operation (via Terminal Input)

Step	Instruction	Keypad Display
1	Turn on the inverter.	-
2	• Ensure that ‘0.00’ is displayed. • Press the [ENT] key.	0.00
3	• ‘0’, the last digit of ‘0.00’, will be flashing. • Press the [MODE] key three times.	0.00
4	• ‘00.00’ will be displayed and its first digit will be flashing. • Press the [▲] key.	00.00
5	• Ensure that ‘10.00’ is displayed and then press the [ENT] key. • When ‘10.00’ starts flashing, press the [ENT] key.	10.00
6	• When the frequency reference is set to 10.00 Hz, ‘10.00’ stops flashing. • Turn ON the switch located between the P1 (FX) terminal and CM terminal. Refer to the Wiring Diagram below the table for information about the switch.	10.00
7	• The RUN indicator light next to the inverter display will flash, the FWD indicator will comes on steady. The current acceleration frequency is displayed. • When the frequency reference reaches (10 Hz), the display and indicator appear as shown in the image on the right. • Turn OFF the switch located between the P1 (FX) terminal and CM terminal.	10.00
8	• The RUN indicator light next to the inverter display will flash again and the current deceleration frequency is displayed. • When frequency reference reaches 0 Hz, the RUN and FWD indicator lights turn off, and the frequency reference (10.00 Hz) is displayed again.	10.00

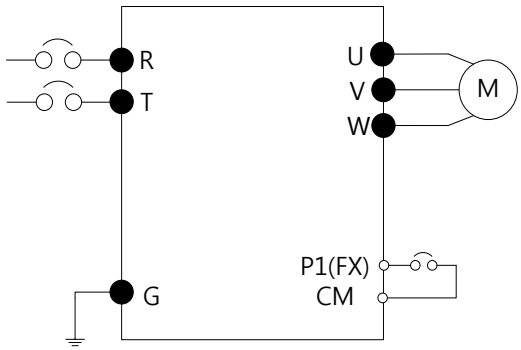

[Wiring Diagram]

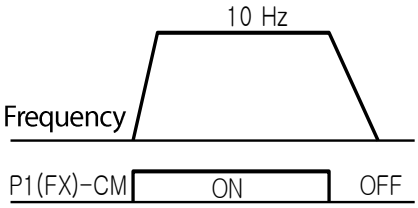

[Operation Pattern]

Caution

The instructions in the table are based on the factory default parameter settings. The inverter may not work correctly if the default parameter settings are changed after the inverter is purchased. In such cases, initialize all parameters to reset the values to factory default parameter settings before following the instructions in the table (refer to 6.15*6.15 Parameter Initialization* on page *136*).

3.3.6 Frequency Setting (Potentiometer) and Operation (Terminal Input)

Step	Instruction	Keypad Display
1	Turn on the inverter.	-
2	• Ensure that '0.00' is displayed. • Press the [▲] key four times.	0.00
3	• Ensure that the code is moved to Frq (Frequency reference source). • Press the [ENT] key.	Frq
4	• The frequency reference source is set to 0 (Keypad). • Press the [▲] key two times.	0
5	• The frequency reference source is set to 2 (Potentiometer). • Press the [ENT] key.	2
6	• Press the [ENT] key while '2' flashes. • When the frequency reference source has been set to potentiometer, the Frq code is displayed. • Press the [▼] key four times to return to monitor the frequency setting values. • Adjust the potentiometer to increase or decrease the frequency reference to 10.00 Hz.	Frq
7	• The RUN indicator light next to the inverter display will flash, the FWD indicator will comes on steady. The current acceleration frequency is displayed. • When the frequency reference reaches (10 Hz), the display and indicator appear as shown in the image on the right. • Turn OFF the switch located between the P1 (FX) terminal and CM terminal.	10.00
8	• The RUN indicator light next to the inverter display will flash again and the current deceleration frequency is displayed. • When frequency reference reaches 0 Hz, the RUN and FWD indicator lights turn off, and the frequency reference (10.00 Hz) is displayed again.	10.00

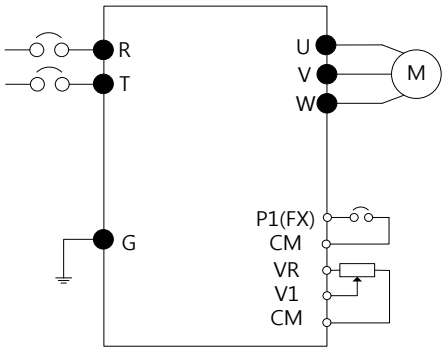

[Wiring Diagram]

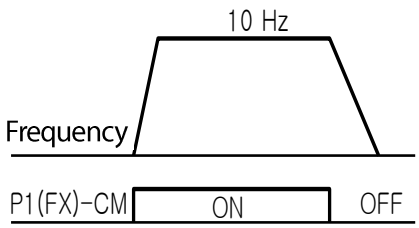

[Operation Pattern]

Caution

The instructions in the table are based on the factory default parameter settings. The inverter may not work correctly if the default parameter settings are changed after the inverter is purchased. In such cases, initialize all parameters to reset the values to factory default parameter settings before following the instructions in the table (refer to *6.15 Parameter Initialization* on page *136*).

3.3.7 Frequency Setting (Potentiometer) and Operation (Keypad)

Step	Instruction	Keypad Display
1	Turn on the inverter.	-
2	• Ensure that the '0.00' is displayed. • Press the [▲] key 3 times.	0.00
3	• Ensure that the code is moved to drv (Command source). • Press the [ENT] key.	drv
4	• The command source is set to 1 (Inverter terminal). • Press the [▼] key.	1
5	• Ensure that the code value '0' is displayed and then press the [ENT] key. • Press the [ENT] key once again when '0' is flashing.	0
6	• When the frequency setting is changed to the [RUN] key of the keypad, the drv code will be displayed. • Press the [▲] key.	drv
7	• Ensure that the code is moved to Frq (Frequency reference source). • Press the [ENT] key.	Frq
8	• The frequency reference source is set to 0 (Keypad). • Press the [▲] key 2 times.	0

Step	Instruction	Keypad Display
9	• Ensure that the frequency reference source is set to 2 (Potentiometer), and then press the [ENT] key. • Press the [ENT] key once again while '2' is flashing.	2
10	• When the frequency reference source has been set to keypad volume, the Frq code is displayed. • Press the [▼] key four times to return to monitor the frequency setting values. • Adjust the potentiometer to increase or decrease the frequency reference to 10.00 Hz.	Fr9
11	• Press the [RUN] key. • The RUN indicator light next to the inverter display will flash, the FWD indicator will comes on steady. The current acceleration frequency is displayed. • When the frequency reference reaches (10 Hz), the display and indicator appear as shown in the image on the right. • Press the [STOP/RST] key.	10.00
12	• The RUN indicator light next to the inverter display will flash again and the current deceleration frequency is displayed. • When frequency reference reaches 0 Hz, the RUN and FWD indicator lights turn off, and the frequency reference (10.00 Hz) is displayed again.	10.00

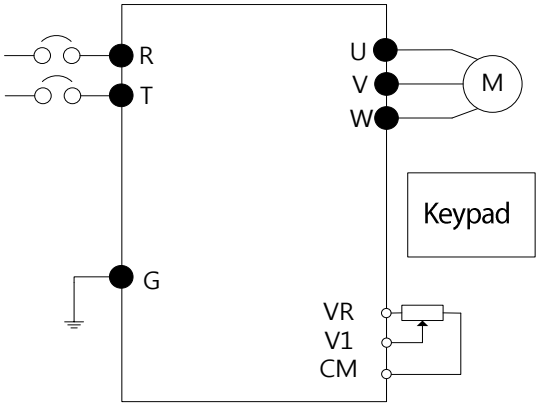

[Wiring Diagram]

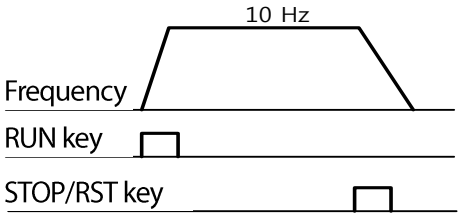

[Operation Pattern]

Caution

The instructions in the table are based on the factory default parameter settings. The inverter may not work correctly if the default parameter settings are changed after the inverter is purchased. In such cases, initialize all parameters to reset the values to factory default parameter settings before following the instructions in the table (refer to 6.15*6.15 Parameter Initialization* on page *136*).

3.4 Monitoring the Operation

3.4.1 Output Current Monitoring

The following example demonstrates how to monitor the output current in the Operation group using the keypad.

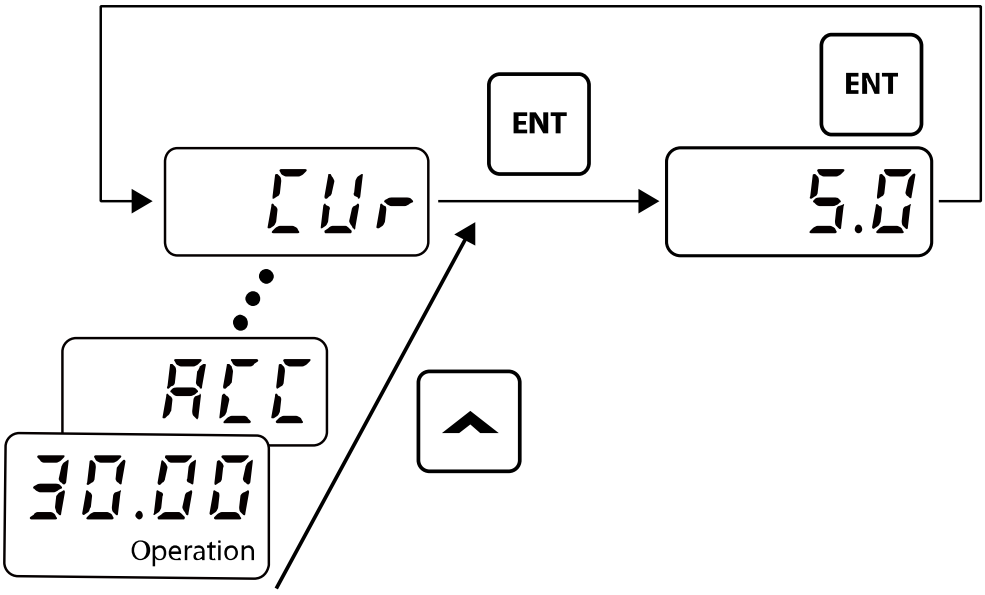

Step	Instruction	Keypad Display
1	• Ensure that the first code of the Operation group is selected, and the code 30.00 (Command Frequency) is displayed. • Press the [▲] or [▼] key until CUr is displayed.	30.00
2	• Ensure that the code is moved to CUr (Output current) for output current monitoring. • Press the [ENT] key.	CUr

Step	Instruction	Keypad Display
3	• The inverter output current (5.0 A) will be displayed • Press the [ENT] key.	5.0
4	• The cursor will move to the left. • Press the [MODE] key.	CUr

Note

You can use the dCL (DC link voltage monitor) and vOL (output voltage monitor) codes in the Operation group in exactly the same way as shown in the example above, to monitor each function's relevant values.

3.4.2 Fault Trip Monitoring

The following example demonstrates how to monitor fault trip conditions in the Operation group using the keypad.

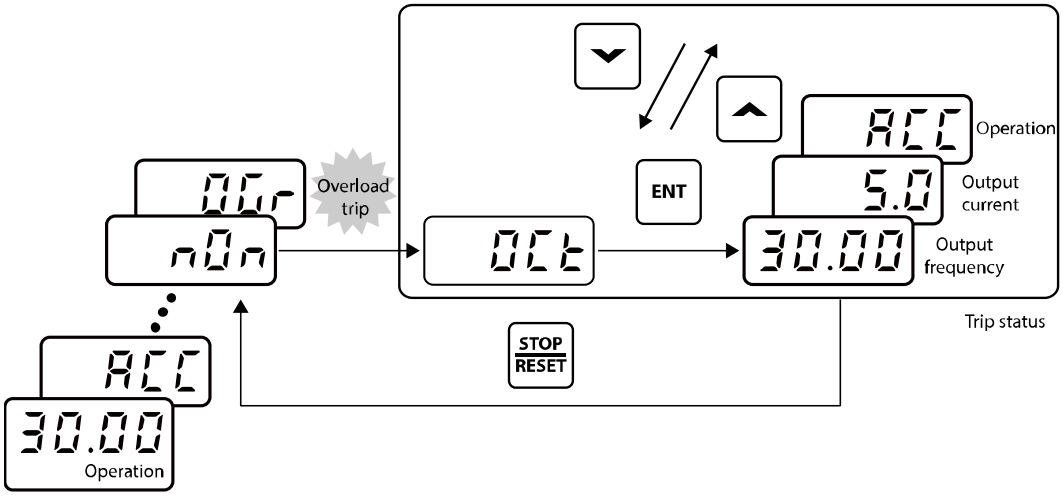

Step	Instruction	Keypad Display
1	• The OCt code is displayed when an over current trip fault has occurred. • Press the [ENT] key, and then press the [▲] or [▼] key.	OCt
2	• The operation frequency at the time of the fault (30.00 Hz) is displayed. • Press the [▲] key.	30.00
3	• The output current at the time of the fault (5.0 A) is displayed. • Press the [▲] key.	5.0

Step	Instruction	Keypad Display
4	• The operation status at the time of the fault is displayed. ACC on the display indicates that the fault occurred during acceleration. • Press the [STOP/RESET)] key.	ACC
5	The fault condition is cleared and the nOn code is displayed.	nOn

Note

- You can use the dCL (DC link voltage monitor) and vOL (output voltage monitor) codes in the Operation group in exactly the same way as shown in the example above, to monitor each function's relevant values.

- If multiple fault trips occur at the same time, a maximum of 3 fault trip records can be retrieved as shown in the following example.

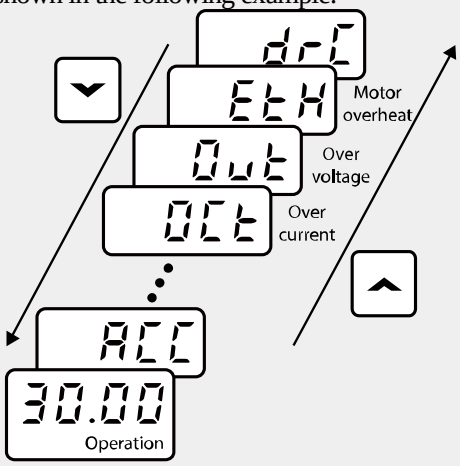

4 Control Block Diagram

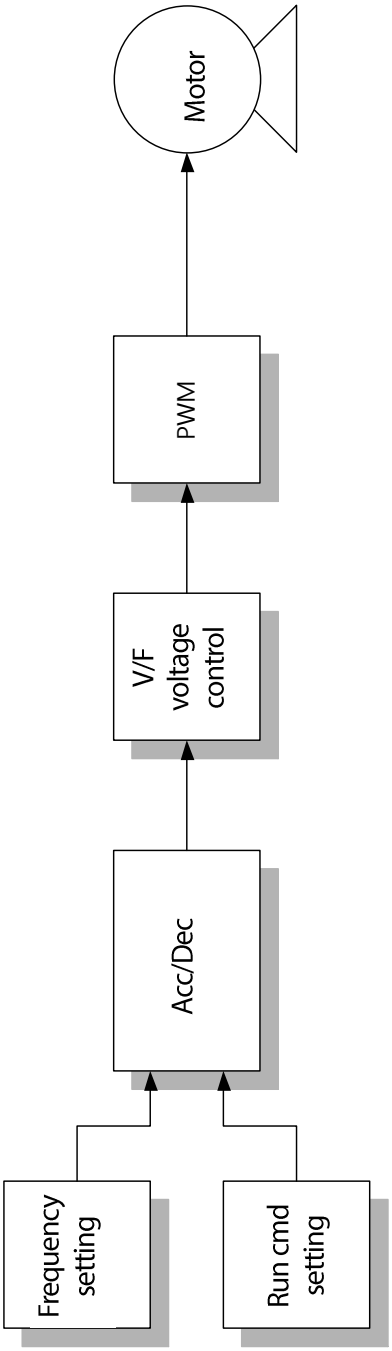

4.1 Setting Frequency

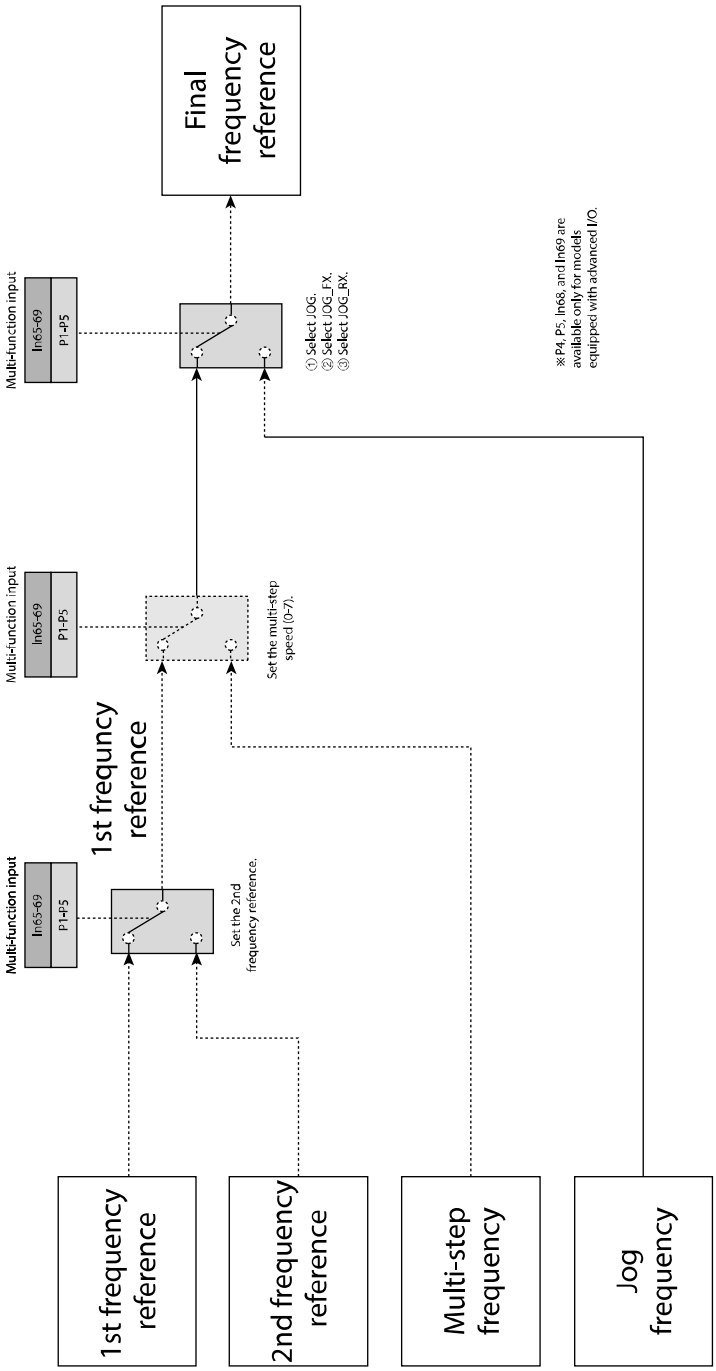

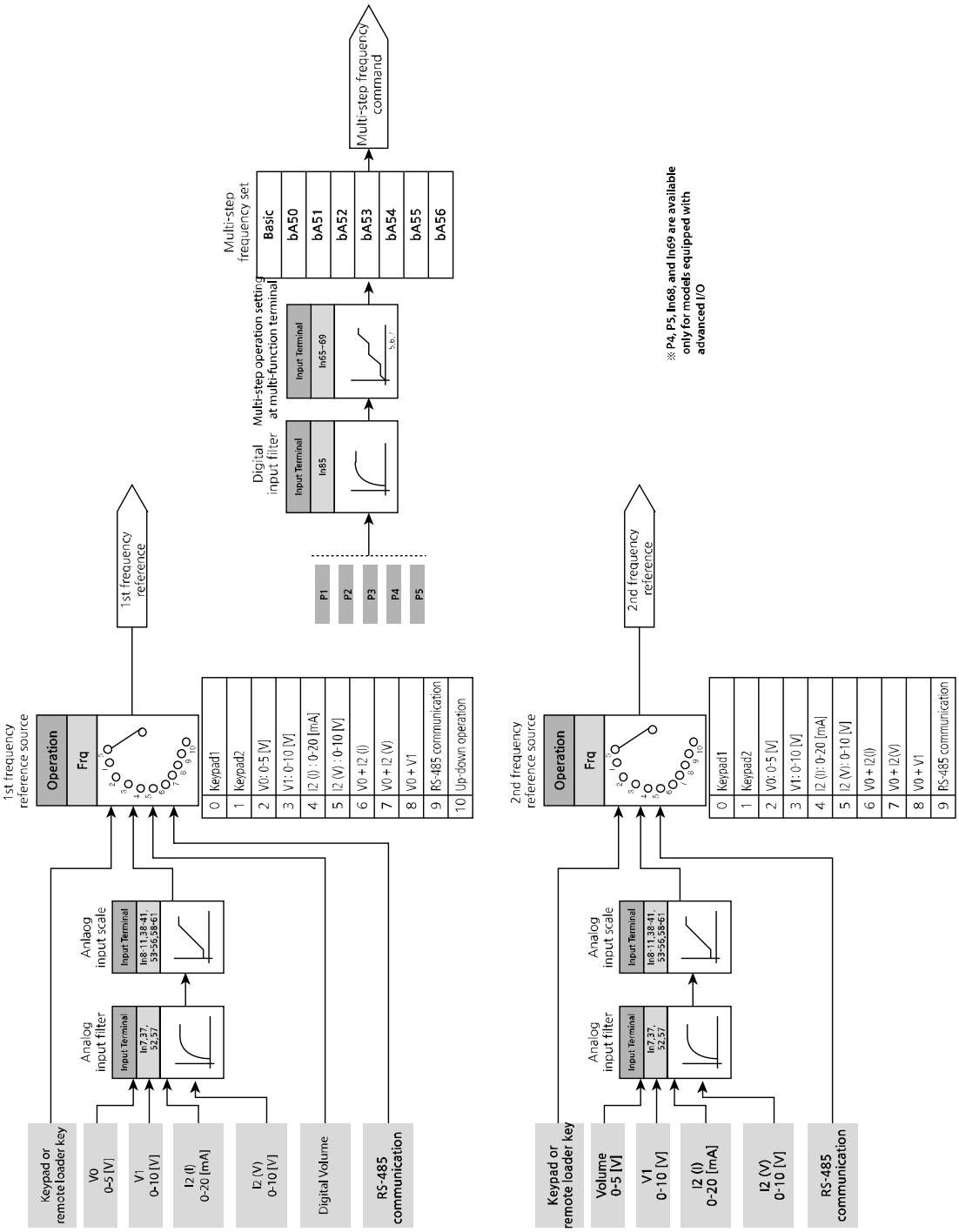
1st frequency reference source
Operation
Frq
0 Keypad1
1 Keypad2
2 V0: 0-5 [V]
3 V1: 0-10 [V]
4 I2 (I) : 0-20 [mA]
5 I2 (V) : 0-10 [V]
6 V0 + I2 (I)
7 V0 + I2 (V)
8 V0 + V1
9 RS-485 communication
10 Up-down operation
1st frequency reference
Keypad or remote loader key
V0 0-5 [V]
V1 0-10 [V]
I2 (I) 0-20 [mA]
I2 (V) 0-10 [V]
Digital Volume
RS-485 communication
Analog input filter
Input Terminal
In7,37, 52,57
Analog input scale
Input Terminal
In8-11,38-41, 53-56,58-61
Digital input filter
Input Terminal
In65
P1
P2
P3
P4
P5
Multi-step operation setting at multi-function terminal
Input Terminal
In65~69
Multi-step frequency set
Basic
bA50
bA51
bA52
bA53
bA54
bA55
bA56
Multi-step frequency command
※ P4, P5, In68, and In69 are available only for models equipped with advanced I/O
2nd frequency reference source
Operation
Frq
0 Keypad1
1 Keypad2
2 V0: 0-5 [V]
3 V1: 0-10 [V]
4 I2 (I): 0-20 [mA]
5 I2 (V): 0-10 [V]
6 V0 + I2(I)
7 V0 + I2(V)
8 V0 + V1
9 RS-485 communication
2nd frequency reference
Keypad or remote loader key
Volume 0-5 [V]
V1 0-10 [V]
I2 (I) 0-20 [mA]
I2 (V) 0-10 [V]
RS-485 communication
Analog input filter
Input Terminal
In7,37, 52,57
Analog input scale
Input Terminal
In8-11,38-41, 53-56,58-61

4.2 Setting Run Command

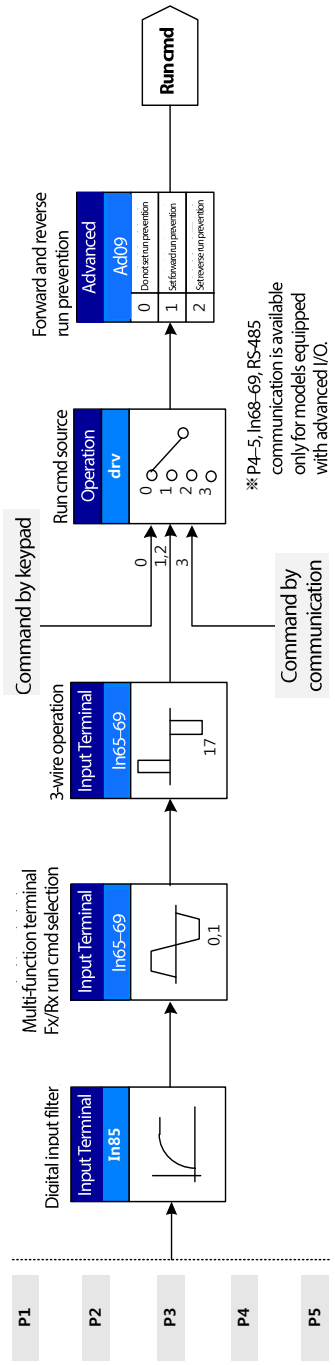

4.3 Controlling Acc/Dec and V/F Voltage

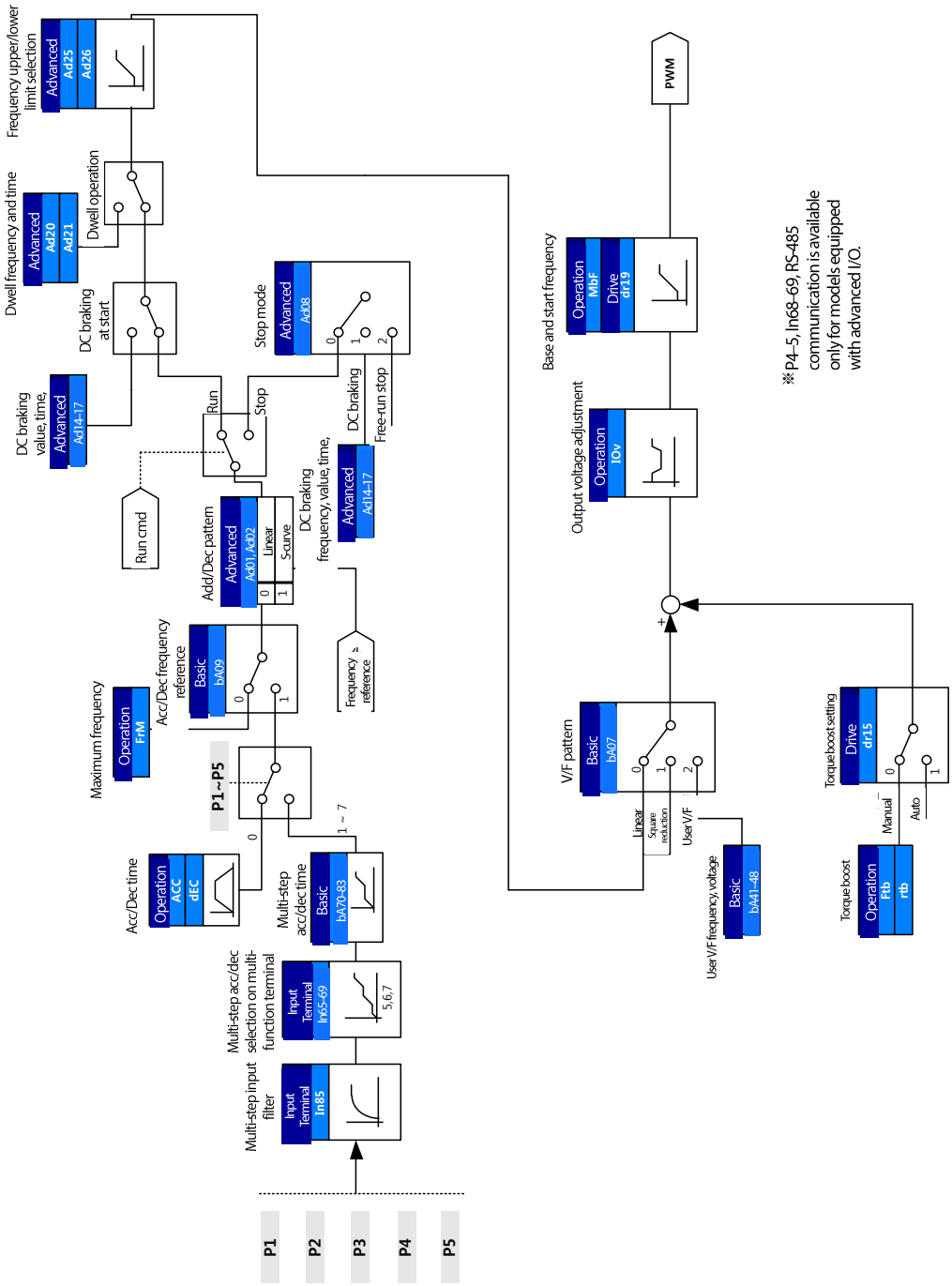

5 Learning Basic Features

This chapter describes the basic features of the M100 inverter. Refer to the following sections to see detailed descriptions for each basic feature.

5.1 Setting Frequency Reference

The M100 inverter provides several methods to setup and modify a frequency reference for an operation. The keypad, analog inputs [e.g., voltage (V1) and current/voltage (I2)[1)] signals], or RS-485[1)] communication can be used.

Group	Code	Name	Parameter Setting			Setting Range	Initial Value	Unit
Operation	Frq	Frequency reference source	0	Digital	Keypad digital frequency setting 1	0–10	0	-
			1		Keypad digital frequency setting 2			
			2	Analog	V0 setting : 0 – 5 [V]			
			3		V1 terminal setting at the terminal block : 0 –10 [V]			
			4		I2 (I) terminal setting at the terminal block : 0–20 [mA][1)]			
			5		I2 (V) terminal setting at the terminal block : 0–10 [V][1)]			
			6		V0 setting + Terminal I2 (I)[1)]			
			7		V0 setting + Terminal I2 (V)[1)]			
			8		V0 setting + Terminal V1			
			9	RS-485 communication [1)]				
			10	Up-down (Digital Volume) operation				

1) Available only for models equipped with advanced I/O.

5.1.1 Keypad as the Source (KeyPad-1 setting)

You can modify the frequency reference by using the keypad and apply changes by pressing the [ENT] key twice. To use the keypad as a frequency reference input source, go to the Frq (Frequency reference source) code in the Operation group and change the parameter value to 0. Input the frequency reference for an operation at the 0.00 (command frequency) code in the Operation group, and then press the [ENT] key twice.

Group	Code	Name	Parameter Setting	Setting Range	Initial Value	Unit
Operation	0.00	Command frequency	-	0.00 – Max frq.	0.00	Hz
	Frq	Frequency reference source	0	0 – 10	0	-

5.1.2 Keypad as the Source (KeyPad-2 setting)

You can use the [▲] and [▼] keys to modify a frequency reference.

To use this as a second option, set the keypad as the source of the frequency by going to the Frq (Frequency reference source) code in the Operation group and changing the parameter value to 1. Press the [ENT] key and then press the [▲] or [▼] key to modify the frequency reference at the 0.00 (command frequency) code.

Group	Code	Name	Parameter Setting	Setting Range	Initial Value	Unit
Operation	0.00	Command frequency	-	0.00 – Max frq.	0.00	Hz
	Frq	Frequency reference source	1	0 ~ 10	0	-

5.1.3 Built-in Volume input (V0) 0 – 5 [V] as the Source

You can modify the frequency reference by using the built-in volume (V0) dial. Go to the Frq (Frequency reference source) code in the Operation group and change the parameter value to 2, and then rotate the built-in volume (V0) dial. You can monitor the parameter setting of the frequency reference at the 0.00 (command frequency) code in the Operation group.

Group	Code	Name	Parameter Setting	Setting Range	Initial Value	Unit
Operation	0.00	Command frequency	-	0.00 –Max frq.	0.00	Hz
	Frq	Frequency reference source	2	0–10	0	-

Group	Code	Name	Parameter Setting	Setting Range	Initial Value	Unit
In (Input Terminal)	37	V0 input filter time constant	10	0 – 9999	10	-
	38	V0 input minimum voltage	-	0.00 – V0 input max voltage	0.00	V
	39	Frequency corresponding to the V0 input minimum voltage	-	0.00 –Max frq.	0.00	Hz
	40	V0 input maximum voltage	-	V0 input min. voltage – 5.00	5.00	V
	41	Frequency corresponding to the V0 input maximum voltage	-	0.00 –Max frq.	60.00	Hz

5.1.4 V1 Terminal as the Source

You can modify a frequency reference by setting the voltage inputs when using the V1 terminal or connecting the VR terminal to the V1 terminal.

Group	Code	Name	Parameter Setting	Setting Range	Initial Value	Unit
Operation	0.00	Command frequency	-	0.00 –Max frq.	0.00	Hz
	Frq	Frequency reference source	3	0 – 10	0	-
In (Input Terminal)	07	V1 input filter time constant	10	0–9999	10	-
	08	V1 input minimum voltage	-	0.00– V1 input max voltage	0.00	V
	09	Frequency corresponding to the V1 input minimum voltage	-	0.00 –Max frq.	0.00	Hz
	10	V1 input maximum voltage	-	V1 input min. voltage – 10.00	10.00	V
	11	Frequency corresponding to the V1 input maximum voltage	-	0.00 –Max frq.	60.00	Hz

Go to the Frq code in the Operation group and change the parameter value to 3.

You can monitor the parameter setting of the frequency reference at the 0.00 (command frequency) code in the Operation group.

Load the 0 V–10 V signal between the V1 and CM terminals.

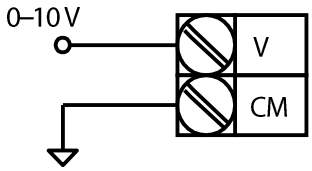

When the 0-10 V voltage is loaded from an external source

In 08 -11: Sets the input range and corresponding frequency for the forward (+) input voltage (0 V–10 V) loaded to the V1 terminal.

Example) When the minimum forward (+) input voltage loaded to the V1 terminal is 2 V while the frequency for the 2 V input is set to 10 Hz , and when the maximum input voltage loaded to the V1 terminal is 8 V while the operation frequency is set to 50 Hz, the input range is set as below:

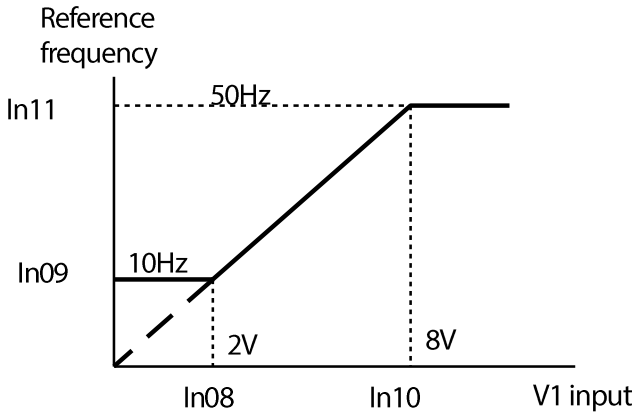

You can connect the terminal wiring as shown below. Refer to the In 07 –11 features.

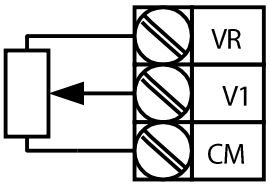

Connecting volume resistor to the terminal block

5.1.5 Input Current (Terminal I2) as the Source

You can input the current to the control terminal block and set the command frequency by changing

the SW2 switch to I.[1] Go to the Frq (Frequency reference source) code in the Operation group and change the parameter value to 4, and then input the 0 – 20 mA current to the I2 and CM terminals.

Group	Code	Name	Parameter Setting	Setting Range	Initial Value	Unit
Operation	0.00	Command frequency	-	0.00 – Max frq.	0.00	Hz
	Frq	Frequency reference source	4[1]	0 – 10	0	-
In (Input Terminal)	52[1]	I input filter time constant	10	0 – 9999	10	-
	53[1]	I input minimum current	-	0.00 – I input max current	4.00	mA
	54[1]	Frequency corresponding to the I input minimum current	-	0.00 – Max frq.	0.00	Hz
	55[1]	I input maximum current	-	I input min. current – 20.00	20.00	mA
	56[1]	Frequency corresponding to the I input maximum current	-	0.00 – Max frq.	60.00	Hz

1) Available only for models equipped with advanced I/O.

5.1.6 Input Voltage (Terminal I2) as the Source

You can input the voltage to the control terminal block and set the command frequency by changing the SW2 switch to V[1]. Go to the Frq (Frequency reference source) code in the Operation group and change the parameter value to 5, and then input the 0–10 V voltage to the I2 and CM terminals.

Group	Code	Name	Parameter Setting	Setting Range	Initial Value	Unit
Operation	0.00	Command frequency	-	0.00 – Max frq.	0.00	Hz
	Frq	Frequency reference source	5[1]	0 – 10	0	-
In (Input Terminal)	57[1]	V input filter time constant	10	0 – 9999	10	-
	58[1]	V input minimum voltage	-	0.00 – V input max. voltage	0.00	V
	59[1]	Frequency corresponding to the V input minimum voltage	-	0.00 – Max frq.	0.00	Hz
	60[1]	V input maximum voltage	-	V input min. voltage – 10.00	10.00	V
	61[1]	Frequency corresponding to the V input maximum voltage	-	0.00 – Max frq.	60.00	Hz

1) Available only for models equipped with advanced I/O.

5.1.7 Frequency Reference Setting via Built-in Volume (V0) and I2 Terminal

You can specify the current inputs for the built-in volume (V0) and I2 terminal as the main reference and auxiliary reference respectively and enable the override feature. [1)] Change the SW2 switch of the control terminal block and go to the Frq (Frequency reference source) code in the Operation group and change the parameter value to 6.

Group	Code	Name	Parameter Setting	Setting Range	Initial Value	Unit
Operation	0.00	Command frequency	-	0.00 – Max frq.	0.00	Hz
	Frq	Frequency reference source	6[1)]	0 – 10	0	-

1) Available only for models equipped with advanced I/O.

Override is a feature for entering the main reference value and the auxiliary reference value simultaneously and applying the total value as a frequency reference. You can receive a quick response via the main reference and accurately control via the auxiliary reference,

The built-in volume (V0) range is 0 – 5 V for the auxiliary reference and 0 –20 mA for the main reference to use the override feature. You can set the main reference and auxiliary reference values according to your operation condition.

Please refer to the following override operation settings.

Group	Code	Name	Parameter Setting	Setting Range
In (Input Terminal)	37	V0 input filter time constant	10	-
	38	V0 input minimum voltage	0.00	V
	39	Frequency corresponding to the V0 input minimum voltage	0.00	Hz
	40	V0 input maximum voltage	5.00	V
	41	Frequency corresponding to the V0 input maximum voltage	5.00	Hz
	52[1)]	I input filter time constant	10	-
	53[1)]	I input minimum current	4.00	mA
	54[1)]	Frequency corresponding to the I input minimum current	0.00	Hz
	55[1)]	I input maximum current	20.00	mA
	56[1)]	Frequency corresponding to the I input maximum current	60.00	Hz

1) Available only for models equipped with advanced I/O.

When the volume voltage is 2.5 V (2.5 Hz) and 12 mA (30 Hz) is supplied to the I2 terminal, the inverter output frequency becomes 32.5 Hz.

5.1.8 Frequency Reference Setting via Built-in Volume (V0) and I2 Terminal

You can specify the voltage inputs for the built-in volume (V0) and I2 terminal as the main reference and auxiliary reference respectively and enable the override feature. [1] Change the SW2 switch of the control terminal block and go to the Frq (Frequency reference source) code in the Operation group and change the parameter value to 7.

Group	Code	Name	Parameter Setting	Setting Range	Initial Value	Unit
Operation	0.00	Command frequency	-	0.00 –Max frq.	0.00	Hz
	Frq	Frequency reference source	7[1]	0 – 10	0	-

1) Available only for models equipped with advanced I/O.

Group	Code	Name	Parameter Setting	Unit
In (Input Terminal)	37	V0 input filter time constant	10	-
	38	V0 input minimum voltage	0.00	V
	39	Frequency corresponding to the V0 input minimum voltage	0.00	Hz
	40	V0 input maximum voltage	5.00	V
	41	Frequency corresponding to the V0 input maximum voltage	5.00	Hz
	57[1]	V input filter time constant	10	-
	58[1]	V input minimum voltage	0.00	V
	59[1]	Frequency corresponding to the V input minimum voltage	0.00	Hz
	60[1]	V input maximum voltage	10.00	V
	61[1]	Frequency corresponding to the V input maximum voltage	60.00	Hz

1) Available only for models equipped with advanced I/O.

When the volume voltage is 2.5 V (2.5 Hz) and 5 V (30 Hz) is supplied to the I2 terminal, the inverter output frequency becomes 32.5 Hz.

5.1.9 Frequency Reference Setting via Built-in Volume (V0) and V1 Terminal

You can specify the voltage input for the built-in volume (V0) and V1 terminal as the main reference and auxiliary reference respectively and enable the override feature, Go to the Frq (Frequency reference source) code in the Operation group and change the parameter setting to 8.

Group	Code	Name	Parameter Setting	Setting Range	Initial Value	Unit
Operation	0.00	Command frequency	-	0.00 – Max frq.	0.00	Hz
	Frq	Frequency reference source	8	0 ~ 10	0	-

Group	Code	Name	Parameter Setting	Unit
In (Input Terminal)	37	V0 input filter time constant	10	-
	38	V0 input minimum voltage	0.00	V
	39	Frequency corresponding to the V0 input minimum voltage	0.00	Hz
	40	V0 input maximum voltage	5.00	V
	41	Frequency corresponding to the V0 input maximum voltage	5.00	Hz
	07	V1 input filter time constant	10	-
	08	V1 input minimum voltage	0.00	V
	09	Frequency corresponding to the V1 input minimum voltage	0.00	Hz
	10	V1 input maximum voltage	10.00	V
	11	Frequency corresponding to the V1 input maximum voltage	60.00	Hz

When the V0 voltage is 2.5 V (2.5 Hz) and 5 V (30 Hz) is supplied to the V1 terminal, the inverter output frequency becomes 32.5 Hz.

5.1.10Frequency Reference Setting via RS-485 Communication

You can control the inverter with upper-level controllers, such as PCs or PLCs, via RS-485 communication. Go to the Frq (Frequency reference source) code in the Operation group and change the parameter setting to 9. This feature is available only for models equipped with advanced I/O.

Group	Code	Name	Parameter Setting	Setting Range	Initial Value	Unit
Operation	0.00	Command frequency	-	0.00 – Max frq.	0.00	Hz
	Frq	Frequency reference source	9[1)]	0 –10	0	-
CM (Communication)[1)]	01	Inverter station	-	1 – 250	1	-
	02	Communication protocol setting	-	0 – 1	0	-
	03	Communication speed	-	0 – 5	3	-

1) Available only for models equipped with advanced I/O.

※ For more information about RS-485 communication features, refer to 8 RS-485 Communication Features on page 171.

5.1.11Frequency Reference Setting via Digital Volume (Up-Down)

Group	Code	Name	Parameter Setting	Setting Range	Initial Value	Unit
Operation	0.00	Command frequency	-	0.00 – Max frq.	0.00	Hz
	Frq	Frequency reference source	10	0 – 10	0	-

You can modify the command frequency by using the multi-function input terminal. Go to the Frq (Frequency reference source) code in the Operation group and change the parameter setting to 10.

Related code: In65–69, Ad64–67

※ For more information, refer to 6.3 Up-down Operation on page 112.

5.2 Holding Analog Command Frequency

Hold the command frequency by using multi-function input terminals.

Group	Code	Name	Parameter Setting	Setting Range	Initial Value	Unit
Operation	Frq[1]	Frequency reference source	2 – 8	0 – 10	0	-
In (Input Terminal)	65	Multi-function input terminal P1 function setting	-	0 – 27	0	-
	66	Multi-function input terminal P2 function setting	-		1	
	67	Multi-function input terminal P3 function setting	-		2	
	68[2]	Multi-function input terminal P4 function setting	-		3	
	69[2]	Multi-function input terminal P5 function setting	23		4	

1) You can only set 2, 3, and 8 for the Frq (Frequency reference source) parameter setting for models equipped with standard I/O. For models equipped with advanced I/O, you can set 2–8.

2) For models equipped with standard I/O, you can set the parameter by In65–67 (Multi-function input terminal P1–P3). You can use up to 3 multi-function input terminals for models equipped with standard I/O. If you must use more than 3 multi-function input terminals, use models equipped with advanced I/O.

You can hold the command frequency by using multi-function input terminals when the parameter setting is 2–8 at the Frq (Frequency reference source) code in the Operation group. Select a terminal to be used as an analog command frequency hold signal from P1–P3 for standard I/O models or from P1–P5 for advanced I/O models, and then change the parameter setting to 23 at the corresponding code (standard I/O model: In65–67, advanced I/O model: In65–69).

It will operate as shown below when using the P5 terminal (In 69).

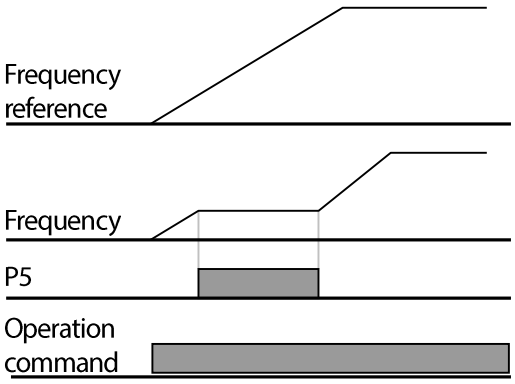

5.3 Setting Multi-step Frequency

Group	Code	Name	Parameter Setting	Setting Range	Initial Value	Unit
Operation	0.00	Command frequency	5.0	0.00 – Max frq.	0.00	Hz
	Frq	Frequency reference source	0	0–10	0	-
In (Input Terminal)	67	Multi-function input terminal P3 function setting	5	0–27	2	-
	68[1)]	Multi-function input terminal P4 function setting	6		3	-
	69[1)]	Multi-function input terminal P4 function setting	7		4	-
bA (Basic)	50	Multi-step frequency 1	-	0.00–Max frq.	10.00	Hz
	51	Multi-step frequency 2	-		20.00	
	52	Multi-step frequency 3	-		30.00	
	53	Multi-step frequency 4	-		30.00	
	54	Multi-step frequency 5	-		25.00	
	55	Multi-step frequency 6	-		20.00	
	56	Multi-step frequency 7	-		15.00	

1) For models equipped with standard I/O, you can set the parameter by In65–67 (Multi-function input terminal P1–P3. You can use up to 3 multi-function input terminals for models equipped with standard I/O. If you must use more than 3 multi-function input terminals, use models equipped with advanced I/O.

Code	Description
bA50–56	Configure multi-step frequency 1–7 at the bA50–56 codes.
In65–69[1)]	Set a terminal to use as the multi-step frequency reference among P1 – P5[1)]. When you input the multi-step frequency reference via the P3 – P5 terminals[1)], set the parameter to 5–7 respectively at the In67–In69 codes in the Input Terminal group. Step 0 uses the frequency reference source set with the Frq and 0.00 frequency codes in the Operation group.

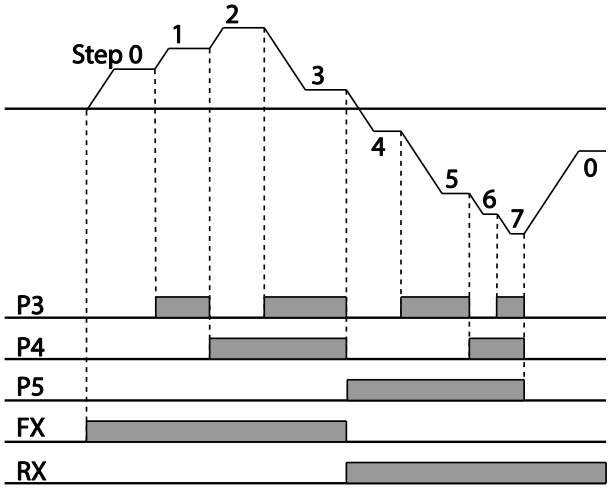

Speed	Fx/Rx	P5	P4	P3
0	✓	-	-	-
1	✓	-	-	✓(+1)
2	✓	-	✓(+2)	-
3	✓	-	✓(+2)	✓(+1)
4	✓	✓(+4	-	-
5	✓	✓(+4)	-	✓(+1)
6	✓	✓(+4)	✓(+2)	-
7	✓	✓(+4)	✓(+2)	✓(+1)

[An example of a multi-step operation]

1) For models equipped with standard I/O, you can set the parameter by In65–67 (Multi-function input terminal P1–P3. You can use up to 3 multi-function input terminals for models equipped with standard I/O. If you must use more than 3 multi-function input terminals, use models equipped with advanced I/O.

5.4 Command Source Configuration

Various devices can be selected as command input devices for the M100 inverter. Input devices available to select include keypad, multi-function input terminal, and RS-485 communication.

Group	Code	Name	Parameter Setting			Setting Range	Initial Value	Unit
Operation	drv	Command source	0	Operation by keypad, the Run and Stop keys		0–3	1	-
			1	Terminal block operation	FX: Forward operation command RX: Reverse operation command			
			2		FX: Run, stop RX: Reversed motor direction			
			3	Operation by RS-485 communication[1)]				

1) Available only for models equipped with advanced I/O.

5.4.1 The Keypad as a Command Input Device

The keypad can be selected as a command input device to send command signals to the inverter. This is configured by setting the drv code to 0 in the Operation group. Press the [RUN] or [STOP] keys on the keypad to start or stop an operation.

Group	Code	Name	Parameter Setting	Setting Range	Initial Value	Unit
Operation	drv	Command source	0	0–3	1	-
dr (Drive)	20	Motor rotation direction selection[1)]	-	F, r	F	-

1) The rotation direction command by the dr20 setting is applied only when drv(Command source) is set to 0. You can still display and set the dr20 setting when drv(Command source) is set to other than 0.

You can press the [RUN] key to start an operation, and the [STOP/RST] key to decelerate the motor and end the operation.

When you use the keypad as a command input device, you can set the motor rotation direction at the dr20 code.

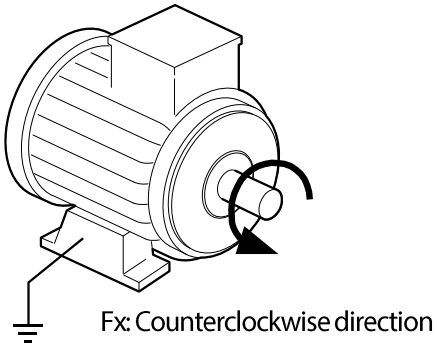

Code	Name	Parameter Setting	Description
dr20	Rotation direction selection	F	Forward rotation
		r	Reverse rotation

5.4.2 Terminal Block as a Command Input Device (Fwd/Rev Run Commands)

Multi-function terminals can be selected as a command input device. This is configured by setting the drv code in the Operation group to 1. Select 2 terminals for the forward and reverse operations,

Group	Code	Name	Parameter Setting	Setting Range	Initial Value	Unit
Operation	drv	Command source	1	0 – 3	1	-
In (Input Terminal)	65	Multi-function input terminal P1 function setting	0	0 – 27	0	-
	66	Multi-function input terminal P2 function setting	1	0 – 27	1	-

When you use the multi-function input terminals P1 and P2 respectively for FX and RX operation. Set In65 and In66 in the Input Terminal (In) group respectively to 0 and 1 at the multi-function input terminals (standard I/O model: P1–P3, advanced I/O model: P1–P5). Set the relevant code (standard I/O model: In65–In67, advanced I/O model: In65–In69) to 0 (FX) and 1 (Rx).

FX is a forward operation command and RX is a reverse operation command.

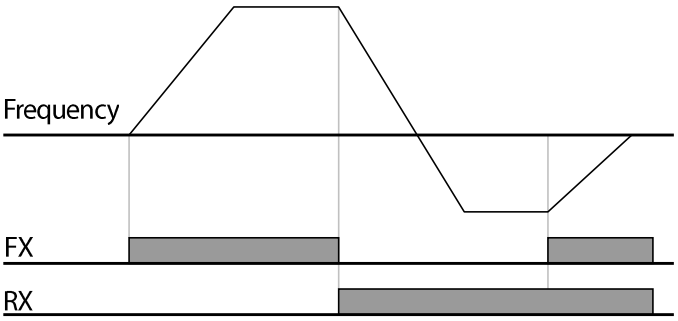

Note

This application enables both terminals to be turned on or off at the same time, constituting a stop command that will cause the inverter to stop operation.

5.4.3 Terminal Block as a Command Input Device (Run and Rotation Direction Commands)

Group	Code	Name	Parameter Setting	Setting Range	Initial Value	Unit
Operation	drv	Command Source	2	0 –3	1	-
In (Input Terminal)	65	Multi-function input terminal P1 function setting	0	0 – 27	0	-
	66	Multi-function input terminal P2 function setting	1	0 – 27	1	-

Multi-function terminals can be selected as a command input device. This is configured by setting the drv code in the Operation group to 2. Select 2 terminals for operation commands and rotation directions selection.

When you use the multi-function input terminals P1 and P2 respectively for FX and RX operation. Set In65 and In66 in the Input Terminal (In) group respectively to 0 and 1 at the multi-function input terminals (standard I/O model: P1–P3, advanced I/O model: P1–P5). Set the relevant code (standard I/O model: In65–67, advanced I/O model: In65–69) to 0 (FX) and 1 (Rx).

FX (0): Assign a terminal for run command. When the RX terminal is set to OFF, the motor is run in the forward direction.

RX (1): Assign a terminal for changing the rotation direction. When the RX terminal is set to ON, the motor is run in the reverse direction.

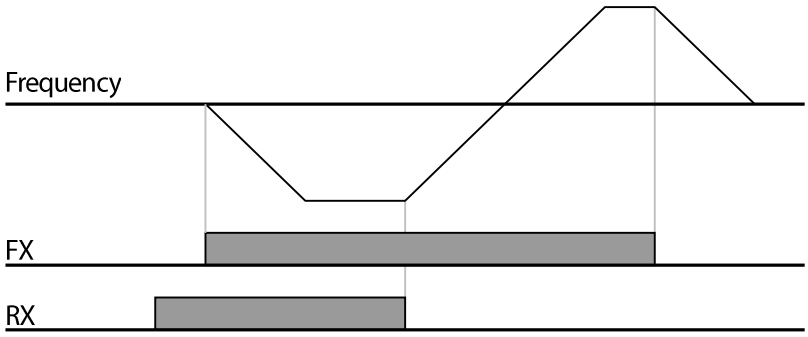

5.4.4 RS-485 Communication as a Command Input Device

RS-485 communication can be selected as a command input device by setting the drv code to 3 in the Operation group. This configuration uses upper level controllers such as PCs or PLCs to control the inverter. This feature is only available for models equipped with advanced I/O.

Group	Code	Name	Parameter Setting	Setting Range	Initial Value	Unit
Operation	drv	Command source	3	0 – 3	1	-
CM (Communication)	01	Inverter station	-	1 – 250	1	-
	02	Communication protocol selection	-	0 – 1	0	-
	03	Communication speed	-	0 – 4	3	-

Set communication protocol, inverter station, and communication speed and run the motor by RS-485 communication run command.

※For more details about RS-485 communication features, refer to *8 RS-485 Communication Features* on page *171*.

5.5 Forward or Reverse Run Prevention

The rotation direction of motors can be configured to prevent motors from only running in one direction. Set the Ad09 code in the Ad group to 0–2.

Group	Code	Name	Initial Value	Description	Initial Value	Unit
dr (Drive)	20[1)]	Run direction selection	F	Set forward run.	F	-
			r	Set reverse run.		
Ad (Advanced)	09	Forward and reverse run prevention	0	Do not set run prevention.	0	-
			1	Set forward run prevention.		
			2	Set reverse run prevention.		

1) The rotation direction command by the dr20 setting is applied only when drv(Command source) is set to 0. You can still display and set the dr20 setting when drv(Command source) is set to other than 0.

5.6 Power-on Run

Group	Code	Name	Parameter Setting	Setting Range	Initial Value	Unit
Operation	drv	Command source	1, 2	0–3	1	-
Ad (Advanced)	10	Power-on run	1	0–1	0	-

A power-on command can be setup to start an inverter operation after powering up, based on terminal block operation commands (if they have been configured). To enable power-on run, set the Ad10 code to 1 in the Ad group.

This feature is not disabled when the [RUN] key on the keypad or RS-485 communication is selected as a command input device.

Caution

Use caution when operating the inverter with Power-on Run enabled as the motor will begin rotating when the inverter starts up.

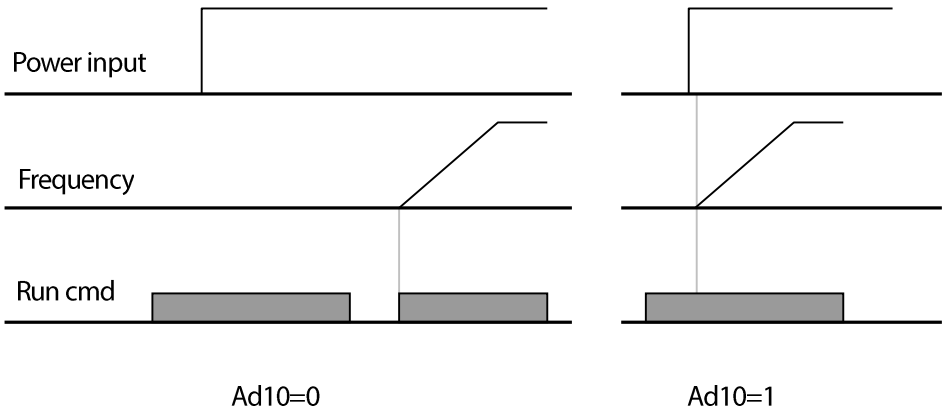

5.7 Reset and Restart

Reset and restart operations can be setup for inverter operation following a fault trip, based on the terminal block operation command (if it is configured). Set the Pr08 code to 1.

Group	Code	Name	Parameter Setting	Setting Range	Initial Value	Unit
Operation	drv	Command source	1, 2	0–3	1	-
Pr (Protection)	08	Reset restart setup	1	0–1	0	-

This feature is not disabled when the [RUN] key on the keypad or RS-485 communication is selected as a command input device.

Caution

Use caution when operating the inverter with Reset and Restart enabled as the motor will begin rotating when reset is operated via terminal block or keypad after a trip.

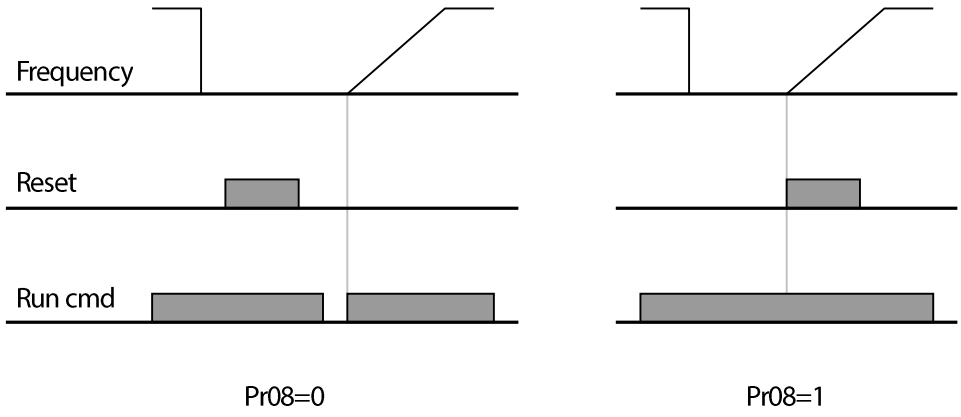

5.8 Setting Acceleration and Deceleration Times

5.8.1 Acc/Dec Time Based on Maximum Frequency

Acceleration and deceleration time values can be set at the ACC and dEC codes in the Operation group.

Group	Code	Name	Parameter Setting	Setting Range	Initial Value	Unit
Operation	ACC	Acceleration time	-	0.0–6,000.0[1)]	5.0	sec
	dEC	Deceleration time	-	0.0–6,000.0[1)]	10.0	sec
	FrM	Maximum frequency	-	40.00–400.00	60.00	Hz
bA (Basic)	09	Acc/Dec reference frequency	0	0–1	0	-
	08	Time scale	-	0–2	1	-

1) Changes based on the bA08 code parameter setting.

Acc/Dec time values can be set based on maximum frequency, not on inverter operation, by setting the bA09 code to Acc/Dec and the reference frequency to 0.

Time scale for Acc/Dec time can be set at the bA08 code. If, for example, maximum frequency is 60.00 Hz, the Acc/Dec times are set to 5 seconds, and the frequency reference for operation is set at 30 Hz (half of 60 Hz), the time required to reach 30 Hz therefore is 2.5 seconds (half of 5 seconds).

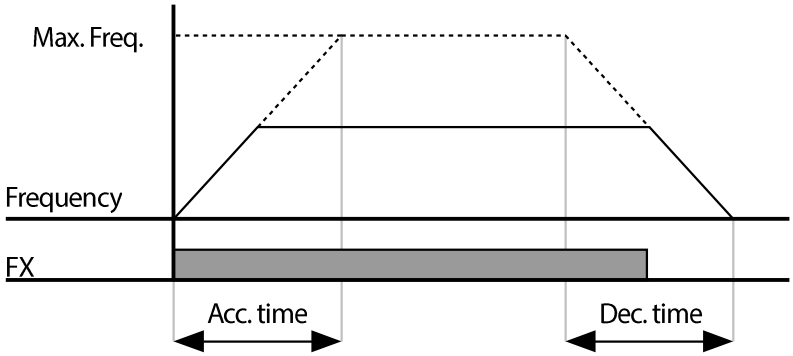

It is particularly useful that the time scale unit changes based on the max 5 digits of Acc/Dec time value when more accurate Acc/Dec times are required due to load characteristics.

If, for example, the Acc/Dec time scale changes to 0.01 second, the maximum Acc/Dec time will become 600.00 seconds. Refer to the following table.

Code	Name	Parameter Setting	Time Scale Range	Initial Value	Description
bA08	Time scale	0	0.01–600.00 [sec]	1	Sets 0.01 second as the minimum unit.
		1	0.1–6,000.0 [sec]		Sets 0.1 second as the minimum unit.
		2	1–60,000 [sec]		Sets 1 second as the minimum unit.

5.8.2 Acc/Dec Time Based on Operation Frequency

Group	Code	Name	Parameter Setting	Setting Range	Initial Value	Unit
Operation	ACC	Acceleration time	-	0.0–6,000.0[1)]	5.0	sec
	dEC	Deceleration time	-	0.0–6,000.0[1)]	10.0	sec
bA (Basic)	09	Acc/Dec reference	1	0–1	0	-

1) Changes based on the bA08 code parameter setting.

Acc/Dec times can be set based on the time required to reach the next step frequency from the existing operation frequency. To set the Acc/Dec time values based on the existing operation frequency, set bA09 (acc/dec reference) in the bA group to 1 (delta frequency).

If, for example, Acc/Dec reference is set to 1 (delta frequency) and acceleration time is set to 5 seconds, the operation frequency changes as shown in the graph below while the target frequency is set to 10 Hz at start and then changed to 30 Hz during section A.

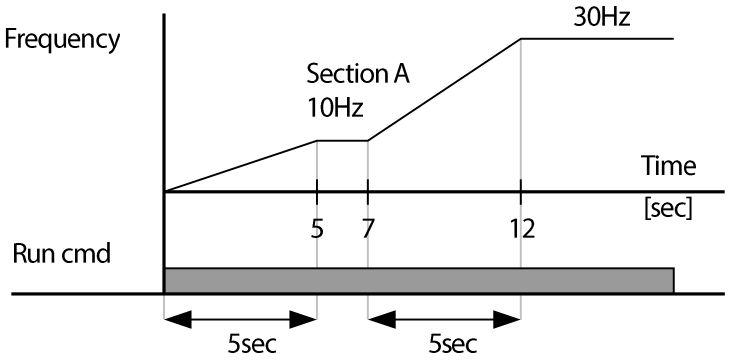

5.8.3 Multi-step Acc/Dec Time Configuration

Group	Code	Name	Parameter Setting	Setting Range	Initial Value	Unit
Operation	ACC	Acceleration time	-	0.0 – 6,000.0[1)]	5.0	sec
	dEC	Deceleration time	-	0.0 – 6,000.0[1)]	10.0	sec
In (Input Terminal)	65	Multi-function input terminal P1 function setting	0	0–27	0	-
	66	Multi-function input terminal P2 function setting	1		1	-
	67	Multi-function input terminal P3 function setting	8		2	-
	68[2)]	Multi-function input terminal P4 function setting	9		3	-
	69[2)]	Multi-function input terminal P5 function setting	10		4	-

1) Changes based on the bA08 code parameter setting.

2) For models equipped with standard I/O, you can set the parameter via In65–67 (Multi-function input terminals P1–P3). You can use up to 3 multi-function input terminals for models equipped with standard I/O. If you must use more than 3 multi-function input terminals, use models equipped with advanced I/O.

Group	Code	Name	Parameter Setting	Setting Range	Initial Value	Unit
bA (Basic)	70	Multi-step acceleration time 1	-	0.0 – 6,000.0	2.0	sec
	71	Multi-step deceleration time 1	-		2.0	
	72	Multi-step acceleration time 2	-		3.0	
	73	Multi-step deceleration time 2	-		3.0	
	74	Multi-step acceleration time 3	-		4.0	
	75	Multi-step deceleration time 3	-		4.0	
	76	Multi-step acceleration time 4	-		5.0	
	77	Multi-step deceleration time 4	-		5.0	
	78	Multi-step acceleration time 5	-		4.0	
	79	Multi-step deceleration time 5	-		4.0	
	80	Multi-step acceleration time 6	-		3.0	
	81	Multi-step deceleration time 6	-		3.0	
	82	Multi-step acceleration time 7	-		2.0	
	83	Multi-step deceleration time 7	-		2.0	

Set a terminal to use as the Acc/Dec time command signal via the multi-function input terminals (standard I/O model: P1–P3, advanced I/O model: P1–P5).

Set the In67–69[1)] codes to 8–10 respectively to change the Acc/Dec time via the P3–P5[1)] terminals.

Multi-step acc/dec time 0 is set the ACC and dEC codes in the operation group.

Set multi-step acceleration/deceleration time1–7 at the bA70 – bA83 codes.

1) For models equipped with standard I/O, you can set the parameter via In65–67 (Multi-function input terminal P1–P3). You can use up to 3 multi-function input terminals for models equipped with standard I/O. If you must use 4 or 5 multi-function input terminals, use models equipped with advanced I/O.

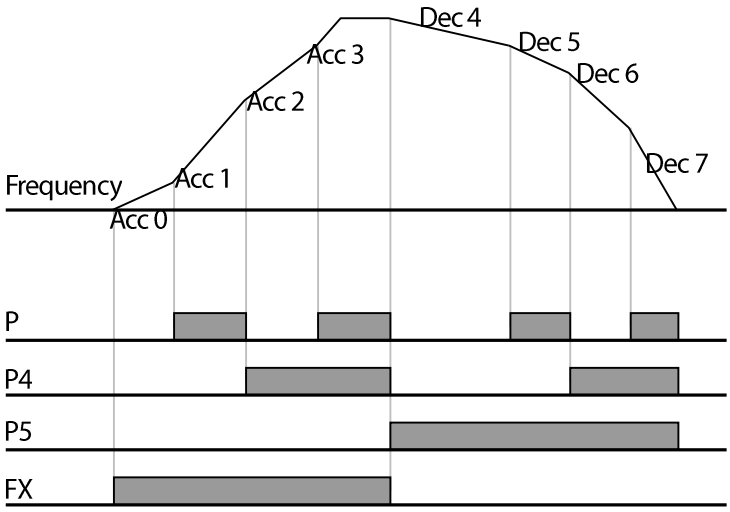

Acc/Dec time	P5	P4	P3
0	-	-	-
1	-	-	✓(+1)
2	-	✓(+2)	-
3	-	✓(+2)	✓(+1)
4	✓(+4)	-	-
5	✓(+4)	-	✓(+1)
6	✓(+4)	✓(+2)	-
7	✓(+4)	✓(+2)	✓(+1)

5.9 Acc/Dec Pattern Configuration

Group	Code	Name	Setting Range		Initial Value	Unit
Ad (Advanced)	01	Acceleration pattern	0	Linear pattern operation	0	-
			1	S-curve pattern operation		
	02	Deceleration pattern	0	Linear pattern operation		
			1	S-curve pattern operation		
	03	S-curve start gradient	1–100		40	%
	04	S-curve end gradient	1–100		40	%

Acceleration patterns and deceleration patterns can be set respectively at the Ad01 and Ad02 codes in the Advanced (Ad) group.

Linear pattern: Features a linear increase or decrease to the output frequency at a fixed rate.

S-curve pattern: Features a smoother and more gradual increase or decrease of output frequency, ideal for lift-type loads, such as elevator doors, etc.

Caution

Actual Acc/Dec times become greater than user defined Acc/Dec times when S-curve Acc/Dec patterns are in use.

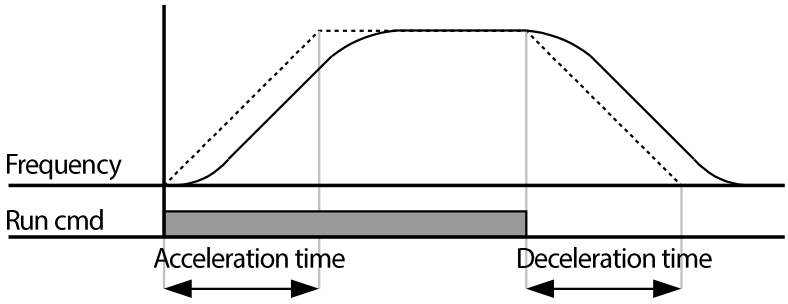

Ad03 defines the S-curve gradient level as a percentage, up to half of the total acceleration and deceleration (Acc Start and Dec Start) values. You can set the Ad03 parameter to a higher value to increase the gradient level for smoother acceleration and deceleration.

Ad04 defines the S-curve gradient level as a percentage, up to half of the remaining total acceleration and deceleration (Acc End and Dec End) values. You can set the Ad04 parameter to a higher value to increase the gradient level for smoother reach to constant speed and stop.

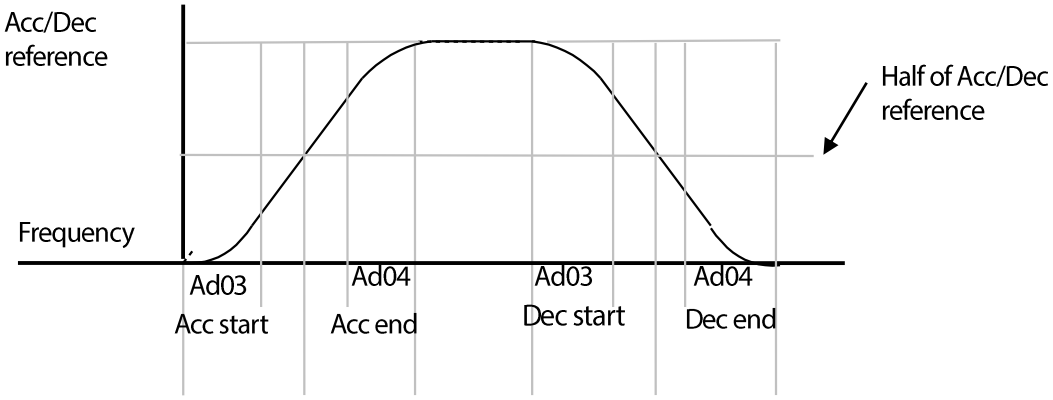

When Acc/Dec reference (bA09) is set to the maximum value while the goal frequency is lower than the maximum frequency, the S-curve is not created properly.

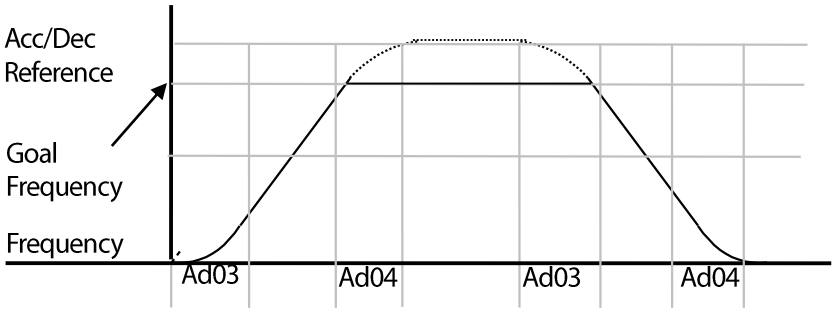

Caution

Note that the upper part of the graph may be cut off if the frequency reference is lower than the maximum frequency.

Acceleration time when the S-curve pattern is set:

$$= ACC + ACC \times \frac{(Ad\ 3/100\,\%)}{2} + ACC \times \frac{(Ad\ 4/100\,\%)}{2}$$

Deceleration time when the S-curve pattern is set:

$$= dEC + dEC \times \frac{(Ad\ 3/100\,\%)}{2} + dEC \times \frac{(Ad\ 4/100\,\%)}{2}$$

The ACC and dEC in the formulas above are times set by the ACC and dEC codes in the Operation group.

5.10 Stopping the Acc/Dec Operation

Configure the multi-function input terminals to stop acceleration or deceleration and operate the inverter at a fixed output frequency.

Group	Code	Name	Parameter Setting	Setting Range	Initial Value	Unit
In (Input Terminal)	65	Multi-function input terminal P1 function setting	-	0–27	0	-
	66	Multi-function input terminal P2 function setting	-		1	
	67	Multi-function input terminal P3 function setting	-		2	
	68[1)]	Multi-function input terminal P4 function setting	-		3	
	69[1)]	Multi-function input terminal P5 function setting	24		4	

Select a terminal to use as an Acc/Dec stop command signal from multi-function input terminals (standard I/O model: P1–P3, advanced I/O model: P1–P5) and set a code from In65–69[1)] to 24.

Set the In69 code to 24 if the P5[1)] terminal is used as the Acc/Dec stop command.

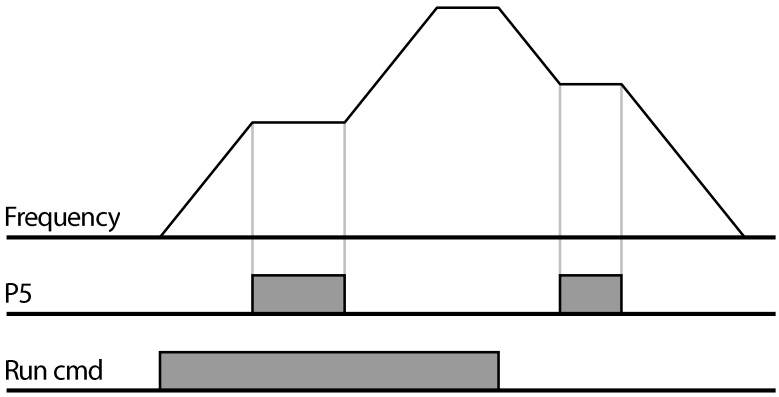

1) For models equipped with standard I/O, you can set the parameter via In65–67 (Multi-function input terminal P1–P3). You can use up to 3 multi-function input terminals for models equipped with standard I/O. If you must use more than 4 or 5 multi-function input terminals, use models equipped with advanced I/O.

5.11 V/F(Voltage/Frequency) Control

5.11.1Linear V/F Pattern Operation

Group	Code	Name	Parameter Setting	Setting Range	Initial Value	Unit
Operation	MbF	Base frequency	-	30.00–400.00	60.00	Hz
dr (Drive)	19	Start frequency	-	0.10–10.00	0.50	Hz
	09	Control mode	-	0–1	1	-
bA (Basic)	07	V/F pattern	0	0–2	0	-

A linear V/F pattern configures the inverter to increase or decrease the output voltage at a fixed rate for different operation frequencies based on V/F characteristics. Set the bA07 code in the Basic (bA) group to 0 (Linear).

Base frequency: The inverter's output frequency when running at its rated voltage. Refer to the motor's rating plate to set this parameter value.

Start frequency: A frequency at which the inverter starts voltage output

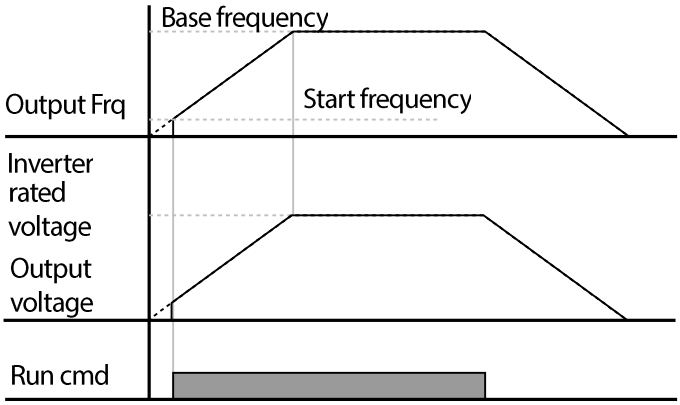

5.11.2Square Reduction V/F pattern Operation

Group	Code	Name	Parameter Setting	Setting Range	Initial Value	Unit
bA (Basic)	07	V/F pattern	1	0–2	0	-

The inverter produces output voltage proportional to 2 square of the operation frequency by setting the bA07 code in the Basic group to 1 (Square reduction). This setup is ideal for loads such as fans or pumps.

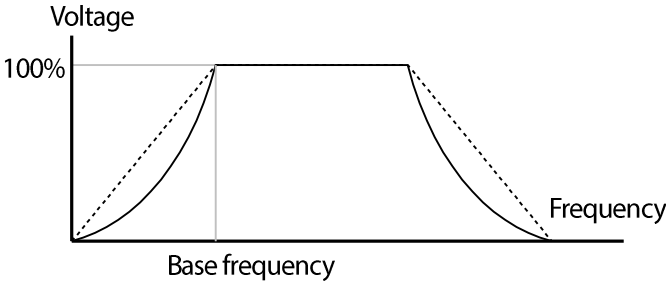

5.11.3User V/F Pattern Operation

Group	Code	Name	Parameter Setting	Setting Range	Initial Value	Unit
bA (Basic)	07	V/F pattern	2	0–2	0	-
	41	User V/F frequency 1	-	0.00– Max frq.	15.00	Hz
	–	–	–	–	–	–
	48	User V/F voltage 4	-	0–100	100	%

The M100 inverter allows the configuration of user-defined V/F patterns.

When the bA07 code is set to 2 (User V/F), user-defined V/F patterns can be configured to suit the load characteristics of special motors.

Caution

- When a normal induction motor is in use, care must be taken not to configure the output pattern away from a linear V/F pattern. Non-linear V/F patterns may cause insufficient motor torque or motor overheating due to over-excitation.
- When a user V/F pattern is in use, forward torque boost (Ftb) and reverse torque boost (rtb) do not operate.

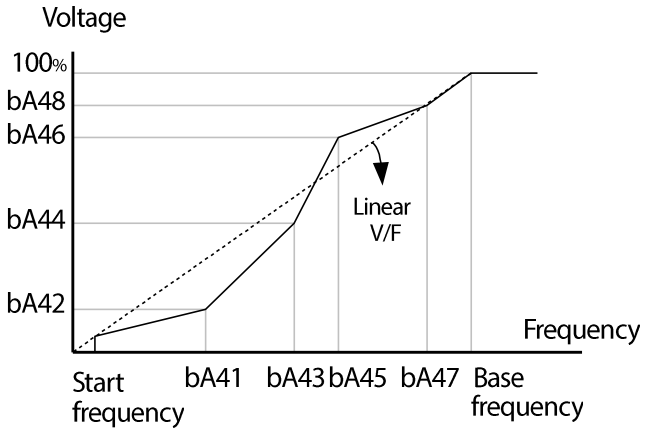

5.11.4Output Voltage Setting

Output voltage settings are required when a motor's rated voltage differs from the inverter's input voltage. The set voltage becomes the output voltage of the inverter's base frequency. If the frequency is higher than the base frequency, and the input voltage is lower than the parameter setting, the input voltage will become the inverter output voltage.

If this code is set to 0, the inverter corrects the output voltage based on an inactive input voltage.

This feature is used when a motor is operating with a voltage that is lower than the input voltage.

Group	Code	Name	Parameter Setting	Setting Range	Initial Value	Unit
Operation	IOv	Output voltage setting	-	0, 170~264	0	V

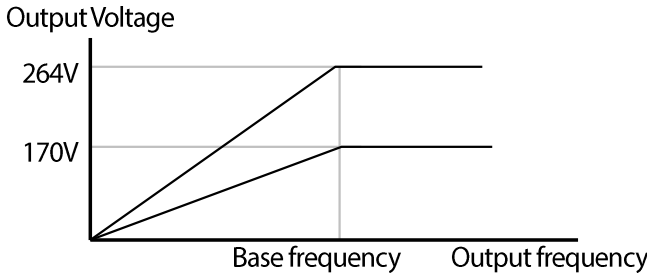

5.12 Torque Boost

5.12.1Manual Torque Boost

Group	Code	Name	Parameter Setting	Setting Range	Initial Value	Unit
dr (Drive)	dr15	Torque boost options	0	0–1	0	-
Operation	Ftb	Forward torque boost	-	0.0–20.0	4.0	%
	rtb	Reverse torque boost				

Manual torque boost enables users to adjust output voltage during low speed operation or motor start. Increase low speed torque or improve motor starting properties by manually increasing output voltage. Configure manual torque boost while running loads that require high starting torque, such as lift-type loads.

Torque boost can be set at the Ftb and rtb codes in the Operation group while the dr15 code is set to 0 (manual torque boost) in the Drive (dr) group.

Manual Torque Boost Setting Details

Code	Description
Ftb (Forward boost)	Set torque boost for forward operation.
rtb (Reverse boost)	Set torque boost for reverse operation.

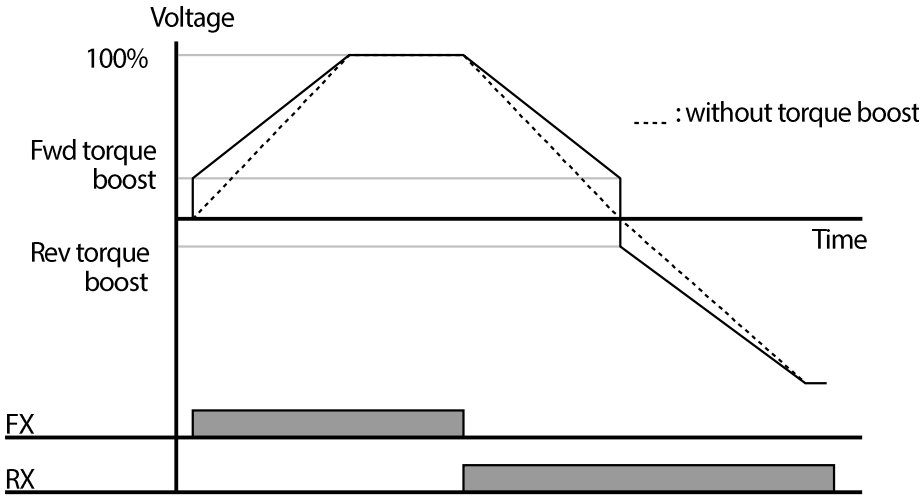

Caution

Excessive torque boost will result in over-excitation and motor overheating .

5.12.2Auto Torque Boost

Group	Code	Name	Parameter Setting	Setting Rage	Initial Value	Unit
dr (Drive)	15	Torque boost options	1	0 –1	0	-
	26[1)]	Auto torque boost filter gain	2	1–1000	2	-
	27[1)]	Auto torque boost motoring gain	120.0	0.0–300.0	120.0	%
	28[1)]	Auto torque boost regenerated voltage gain	120.0	0.0–300.0	120.0	%
Operation	Ftb	Forward torque boost	-	0.0–20.0	4.0	%
	rtb	Reverse torque boost				

1) Available with the dr15 (Torque boost options) set to 1.

You can use the parameter value displayed on the motor's rating plate without motor parameter tuning. Set the MbF (Base frequency), bA12 (Rated slip speed), MrC (Motor-rated current), bA14 (Motor noload current, 40% of motor-rated current) codes to the value displayed on the motor's rating plate. If you do not use the value displayed on the motor's rating plate, each parameter value is set to the initial value and some features may be limited.

Auto torque boost basically operates with manual torque boost (Ftb, rtb) setting value, and the additional boost amount is determined according to the following situation.

The output voltage can be adjusted by adding voltage boost to the output voltage using torque current, when it is too low to start the V/F pattern operation. When the starting torque is too low or too high, the dr27 and dr28 codes (auto torque boost voltage gains) can be used for adjusting compensation based on the load.

Set the dr15 code to 1 (Auto torque boost) in the Drive (dr) group to output the voltage based on the torque boost. You can also change the dr26, dr27, and dr28 parameters.

5.13 Stop Mode Setting

5.13.1Deceleration Stop

Group	Code	Name	Parameter Setting	Setting Range	Initial Value	Unit
Ad (Advanced)	08	Stop mode	0	0–2	0	-

The operation frequency is decelerated to 0 Hz and stops running according to the set deceleration time by the stop command by setting the Ad08 code in the Advanced (Ad) group to 0 (Deceleration stop).

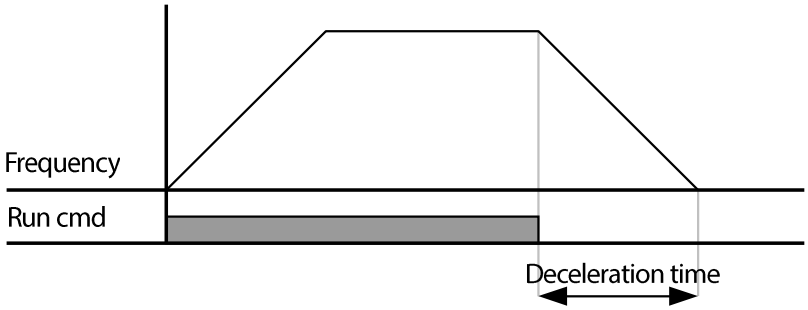

5.13.2Stop After DC Braking

You can stop the motor by supplying DC power to the motor. Set the Ad08 code to 1 (DC braking).

Group	Code	Name	Parameter Setting	Setting Range	Initial Value	Unit
Ad (Advanced)	08	Stop mode	1	0–2	0	-

5.13.3Free Run Stop

To turn off the inverter output when the stop command is on, set the Ad08 code to 2 (Free run stop) in the Advanced (Ad) group.

Group	Code	Name	Parameter Setting	Setting Range	Initial Value	Unit
Ad (Advanced)	08	Stop mode	2	0–2	0	-

When the operation command is off, the frequency and voltage outputs turn off.

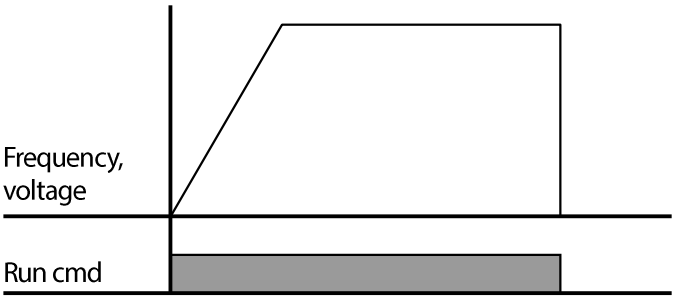

5.14 Frequency Limit

Configure the setting range of the command frequency.

5.14.1Frequency Limit Using Maximum Frequency and Start Frequency

Group	Code	Name	Parameter Setting	Setting Range	Initial Value	Unit
Operation	FrM	Maximum frequency	-	40.00–400.00	60.00	Hz
dr (Drive)	19	Start frequency	-	0.10–10.00	0.50	Hz

Maximum frequency: Set the upper limit value for parameters that are expressed as a frequency unit, except for MbF (Base frequency). You cannot set the frequency value higher than the maximum frequency within this function.

Start frequency: Set the lower limit value for parameters that are expressed as a frequency unit. If an input frequency is lower than the start frequency, the parameter value will be 0.00.

5.14.2Frequency Limit Using Upper and Lower Limit Frequency Values

Group	Code	Name	Parameter Setting	Setting Range	Initial Value	Unit
Ad (Advanced)	24	Frequency upper/lower limit options	1	0–1	0	-
	25[1)]	Frequency lower limit	-	Start frequency–Frequency upper limit	0.50	Hz
	26[1)]	Frequency upper limit	-	0.00–Max frq.	60.00	Hz

1) Available when the Ad24 code is set to 1.

Set the Ad24 code in the Ad group to 1. The inverter operates within the frequency range set at the Ad25 and Ad26 codes. When the frequency is set via analog input (or digital input) as shown in the graph below, the set frequency operates only within the upper limit and lower limit range.

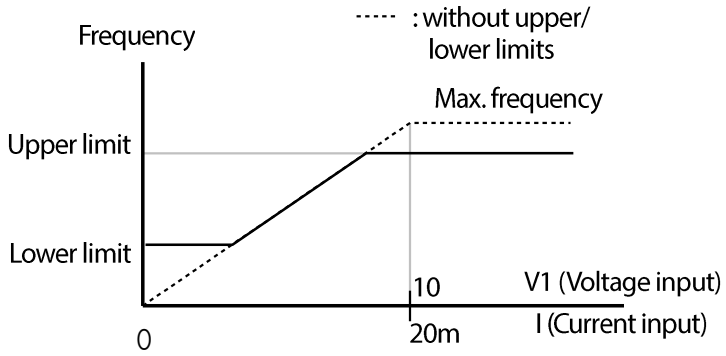

5.14.3Frequency Jump

Use frequency jump to prevent the frequency setting within a specific section.

Group	Code	Name	Parameter Setting	Setting Range	Initial Value	Unit
Ad (Advanced)	27	Frequency jump	1	0–1	0	-
	28[1)]	Frequency jump lower limit 1	-	Start frequency–Frequency jump upper limit 1	10.00	Hz
	29[1)]	Frequency jump upper limit 1	-	Frequency jump lower limit 1 –Max frq.	15.00	Hz
	30[1)]	Frequency jump lower limit 2	-	Start frequency–Frequency jump upper limit 2	20.00	Hz
	31[1)]	Frequency jump upper limit 2	-	Frequency jump lower limit 2 –Max frq.	25.00	Hz
	32[1)]	Frequency jump lower limit 3	-	Start frequency–Frequency jump upper limit 3	30.00	Hz
	33[1)]	Frequency jump upper limit 3	-	Frequency jump lower limit 3 –Max frq.	35.00	Hz

1) Available when the Ad27 code is set to 1.

Set the Ad 27 code in the Ad group to 1. The command frequency cannot be set within the Ad 28–33 frequency range.

Upper limit and lower limit values for each section can be set within the range of the FrM (Maximum frequency) and dr19 (Start frequency) codes.

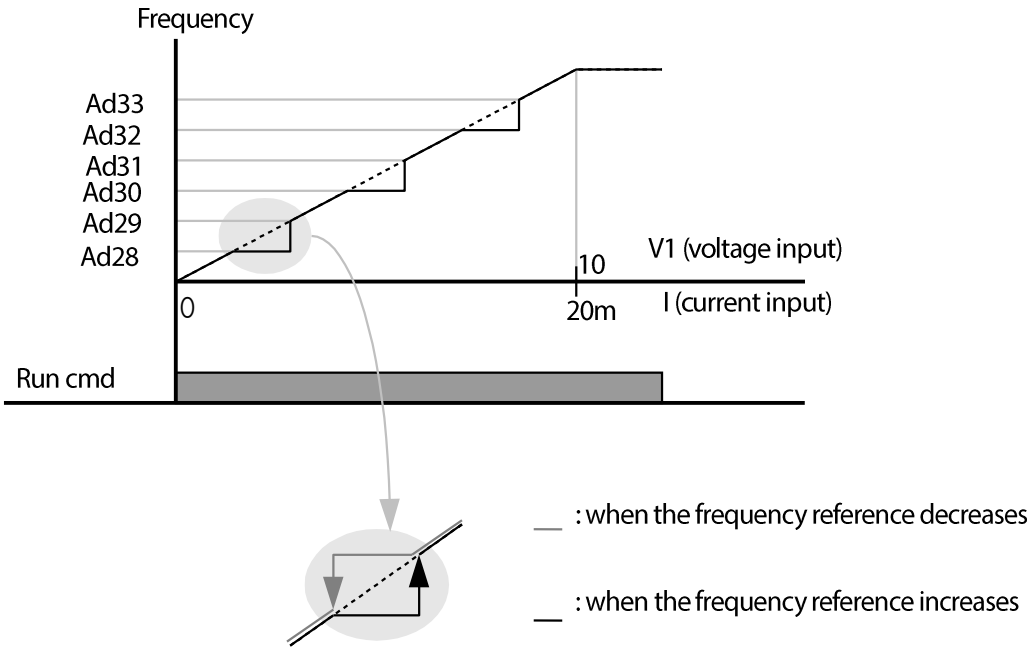

Use frequency jump to prevent motor operation at mechanical resonance frequencies. When jumping through a frequency bands while a motor accelerates and decelerates, operation frequencies cannot be set within the preset frequency jump band and the inverter operates at a constant speed.

When a frequency setting is increased, while the frequency parameter setting value (voltage, current, RS-485 communication, keypad setting, etc.) is within a jump frequency band, the frequency will be maintained at the lower limit value of the frequency band. Then, the frequency will increase when the frequency parameter setting exceeds the range of frequencies used by the frequency jump band.

On the contrary, when a frequency setting is decreased, while the frequency parameter setting value (voltage, current, RS-485 communication, keypad setting, etc.) is within a jump frequency band, the frequency will be maintained at the upper limit value of the frequency band. Then, the frequency will decrease when the frequency parameter setting exceeds the range of frequencies used by the frequency jump band.

6 Learning Advanced Features

6.1 DC Braking

When the operation frequency reaches the set value during deceleration (DC braking frequency), the inverter stops the motor by supplying DC power to the motor.

6.1.1 Stop After DC Braking

With a stop command input, the inverter begins decelerating the motor. When the frequency reaches the DC braking frequency set at Ad17, the inverter supplies DC voltage to the motor and stops it.

Group	Code	Name	Parameter Setting	Setting Range	Initial Value	Unit
Ad (Advanced)	08	Stop mode	1	0–2	0	-
	14[1)]	Output block time before braking	-	0.00–60.00	0.00	sec
	15[1)]	DC braking time	-	0.0–60.0	1.0	sec
	16[1)]	DC braking amount	-	0–200	50	%
	17[1)]	DC braking frequency	-	Start frequency –60.00	5.00	Hz

1) Available when the Ad08 code is set to 1.

Set the Ad08 code to 1 (DC braking stop) in the Advanced group.
Ad14: Set the time to block the inverter output before DC braking.
Ad15: Set the time duration for the DC voltage supply to the motor.
Ad16: Set the amount of DC braking to apply. The parameter setting is based on the rated current of the motor (MrC).
Ad17: Set the frequency to start DC braking.

Caution

Note that the motor can overheat or be damaged if excessive amount of DC braking is applied to the motor, or DC braking time is set too long.

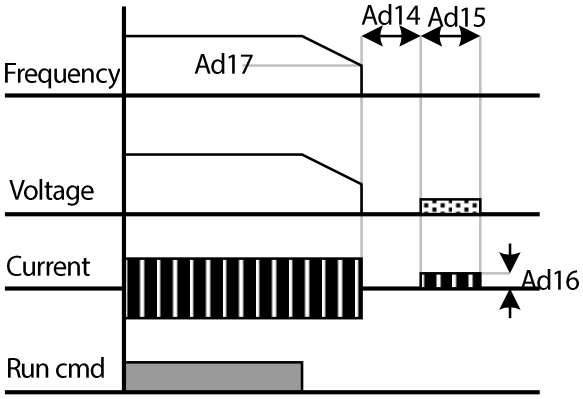

This feature is disabled if the Ad16 or Ad15 code is set to 0.

Output block time before braking (Ad14): If the inertia of the load is great, or if DC braking frequency is set too high, a fault trip may occur due to overcurrent conditions when the inverter supplies DC voltage to the motor. Prevent overcurrent fault trips by adjusting the output block time before DC braking (Ad14).

When the inertia of the load is great and DC braking frequency is set too high, modify the inertia rate at the bA16 code. The DC braking controller's controller gain will be changed based on the set value of the bA16 code.

Code	Name	Parameter Setting	Description
bA16	Inertia rate	0	Less than 10 times motor inertia
		1	10 times motor inertia
		2	More than 10 times motor inertia

6.1.2 Start After DC Braking

With the DC voltage is input, the inverter will begin accelerating the motor.

Group	Code	Name	Parameter Setting	Setting Range	Initial Value	Unit
Ad (Advanced)	13	DC braking amount at start	-	0–200	50	%
	12	DC braking time at start	-	0.0–60.0	0.0	sec

Ad13: The parameter setting is based on the rated current of the motor (MrC).

Ad12: The motor accelerates after the DC voltage is supplied during the set time.

Caution

Note that the motor can overheat or be damaged if excessive amount of DC braking is applied to the motor, or DC braking time is set too long.

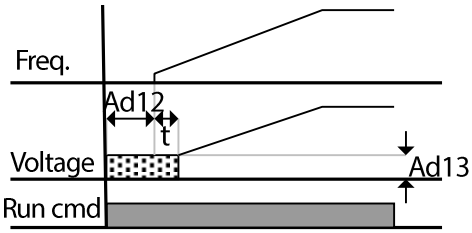

This feature is disabled if the Ad13 or Ad12 code is set to 0.

t : The acceleration frequency starts running after the duration set at the Ad12 code.

6.1.3 DC Braking During Stop

Group	Code	Name	Parameter Setting	Setting Range	Initial Value	Unit
Ad (Advanced)	13	DC braking amount at start	-	0–200	50	%
In (Input Terminal)	67	Multi-function input terminal P3 function setting	11	0–27	2	-

Ad13: The parameter setting is based on the rated current of the motor (MrC).

Select a terminal to use as the DC braking during a stop from the multi-function input terminal (standard I/O model: P1–P3, advanced I/O model: P1–P5).

If you select the P3 terminal to use as a frequency for the DC braking during a stop, the In67 code in the Input Terminal group must be set to 11 (DC braking during stop) as shown in the table above.

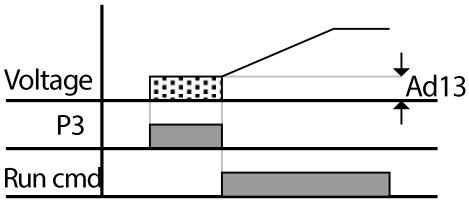

6.2 Jog operation

6.2.1 Jog Operation 1-Forward Jog by Multi-function Terminal

Group	Code	Name	Parameter Setting	Setting Range	Initial Value	Unit
dr (Drive)	11	Jog frequency	-	0.00– Max frq.	10.00	Hz
In (Input Terminal)	69[1)]	Multi-function input terminal P5 function setting	4	0–27	4	-

1) For models equipped with standard I/O, you can set the parameter by In65–67 (Multi-function input terminal P1–P3).

You can set the jog frequency for operation by the dr11 code in the Drive (dr) group.

Select a terminal to use as a jog operation from the multi-function input terminals (standard I/O model: P1–P3, advanced I/O model: P1–P5).

If you select the P5 terminal to use as a jog operation terminal, the In69 code in the Input Terminal group must be set to 4 (Jog operation) as shown in the table above.

You can set the jog frequency range within the range of the maximum frequency (FrM) and the start frequency (dr19).

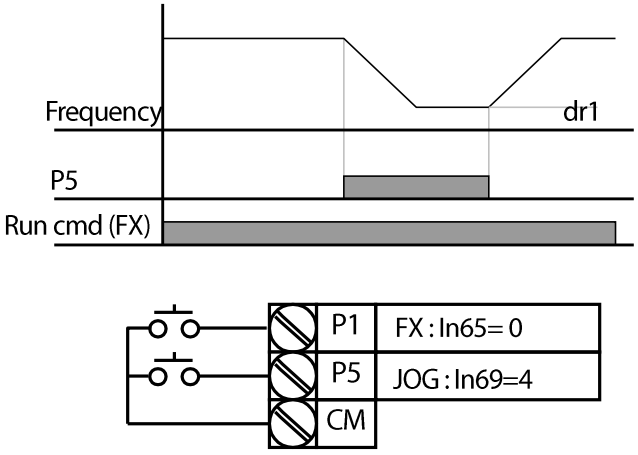

The jog operation is the second highest priority operation, after the dwell operation. If a jog operation is requested while operating the multi-step, up-down, or 3-wire operation modes, the jog operation overrides all other operation modes. The diagram above shows the example when the multi-function input is set to the NPN mode.

6.2.2 Jog Operation 2-Fwd/Rev Jog by Multi-function Terminal

Group	Code	Name	Parameter Setting	Setting Range	Initial Value	Unit
dr (Drive)	11	Jog frequency	-	0.00–Max frq.	10.00	Hz
In (Input Terminal)	68[1)]	Multi-function input terminal P4 function setting	26	0–27	3	-
	69[1)]	Multi-function input terminal P5 function setting	27	0–27	4	-

1) For models equipped with standard I/O, you can set the parameter by In65–67 (Multi-function input terminal P1–P3).

You can set the jog frequency for operation by the dr11 code in the Drive (dr) group.

Select a terminal to use as a JOG-FX operation from the multi-function input terminals (standard I/O model: P1–P3, advanced I/O model: P1–P5). The In68 code in the Input Terminal (In) group must be set to 24 (JOG-FX operation) to use the P4 terminal as a JOG-FX operation terminal.

You can set the jog frequency range within the range of the maximum frequency (FrM) and the start frequency (dr19).

The following graph is an example waveform of when the goal frequency is set to 30 Hz while the jog frequency is set to 10 Hz.

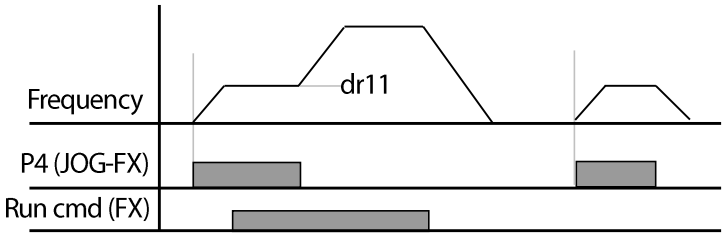

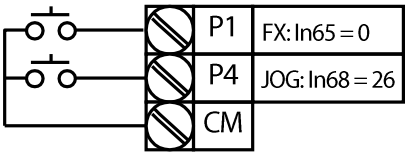

6.3 Up-down Operation

Group	Code	Name	Parameter Setting	Setting Range	Initial Value	Unit
Operation	Frq	Frequency reference source	10	0–10	0	-
In (Input Terminal)	65	Multi-function input terminal P1 function setting	0	0–27	0	-
	67	Multi-function input terminal P3 function setting	25		2	-
	68[1)]	Multi-function input terminal P4 function setting	15		3	-
	69[1)]	Multi-function input terminal P5 function setting	16		4	-
Ad (Advanced)	65	Up-down frequency save options	-	0–1	0	-
	64[2)]	Up-down frequency save	-	0.00–Max frq.	0.00	Hz

1) For models equipped with standard I/O, you can set the parameter by In65–67 (Multi-function input terminal P1–P3). You can use up to 3 multi-function input terminals for models equipped with standard I/O. If you must use more than 3 multi-function input terminals, use models equipped with advanced I/O.

2) Available when the Ad65 code is set to 1.

Up-down Frequency Save Details

You can set the up-down frequency save feature by setting the Frq (frequency reference source) code to 10 in the Operation group.

Select a terminal to use as the up-down operation frequency from the multi-function input terminals (standard I/O model: P1–P3, advanced I/O model: P1–P5).

The In68 and In69 codes must be set to 15 (Frequency increase) and 16 (Frequency reduction) respectively to use the P4 and P5 terminals as the up-down operation terminals.

The In67 code must be set to 25 (Up-down frequency save initialization) in the Input Terminal (In) group to use the P3 terminal as the terminal for the up-down frequency save initialization.

If the Ad65 code is set to 1 (Up-down frequency save options), the up-down save function allows the inverter to save the frequency to the Ad64 code before stopping or decelerating.

When the inverter is running the up-down operation, you can clear the saved up-down frequency setting by configuring the P3 terminal to 25 (Up-down frequency save initialization).

Code	Name	Description

Code	Name	Description	
Ad65	Up-down frequency save options	0 (Initial value)	Up-down frequency save off
		1	Up-down frequency save setting
Ad64	Up-down frequency save	Saves up-down frequency.	

When the Up-down frequency save initialization signal is input to the P3 terminal while the Up terminal signal or the Down terminal signal is on, this signal becomes invalid.

Selecting Up-down Mode

Group	Code	Name	Parameter Setting	Setting Range	Initial Value	Unit
Operation	Frq	Frequency reference source	10	0–10	0	-
In (Input Terminal)	65	Multi-function input terminal P1 function setting	0	0–27	0	-
	68[1)]	Multi-function input terminal P4 function setting	15		3	-
	69[1)]	Multi-function input terminal P5 function setting	16		4	-
Ad (Advanced)	66	Up-down mode selection	-	0–2	0	-
	67	Up-down step frequency	-	0.00–Max frq.	0.00	Hz

1) For models equipped with standard I/O, you can set the parameter by In65–67 (Multi-function input terminal P1–P3).

You can set the up-down mode by setting the frequency reference source (Frq code) to 10 in the Operation group.

Select a terminal to use as an up-down operation frequency from the multi-function input terminals (standard I/O model: P1–P3, advanced I/O model: P1–P5).

The inverter is operated by the mode set by the step frequency at the Ad67 code.

Refer to the following table to learn how to select the up-down mode.

Code	Name	Description	
Ad66	Up-down mode selection	0 (Initial value)	Increases or decreases the command frequency based on the maximum and minimum frequencies.
		1	Increases or decreases the command frequency by the set up-down step frequency (Ad67) according the edge input.

Code	Name	Description	
		2	Compound operation of 0 and 1
Ad67	Up-down step frequency	Frequency that will increase based on the edge input	

When the Ad66 code is set to 0: If the Up terminal signal is on, the frequency reaches up to the maximum value for the set acceleration time. It reaches up to the upper limit when the upper limit has been set. If the Down terminal signal is on, the frequency decelerates to the value for the set deceleration time, regardless of the stop mode. It decelerates to the lower limit when the lower limit has been set.

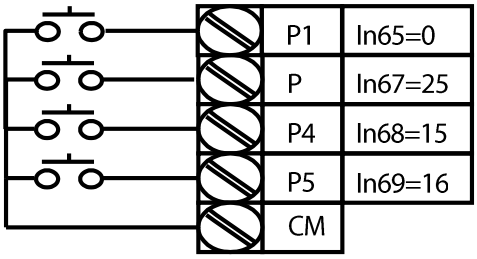

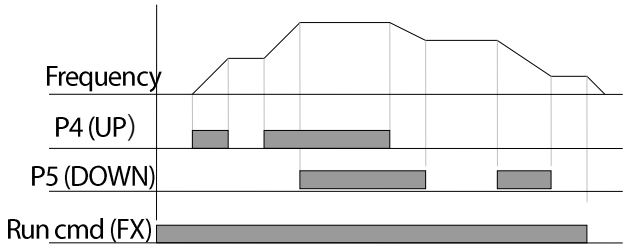

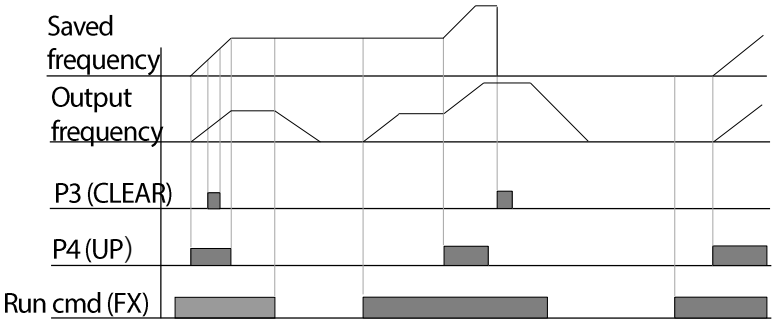

When the Ad66 code is set to 1: The motor accelerates by as much as the step frequency set by the Ad67 code at the multi-function input's positive edge that has been set as the Up terminal signal. The motor decelerates by as much as the step frequency set at the Ad67 code at the multi-function input's positive edge that has been set as the Down signal. The frequency is saved at the falling edge when the Up/down signal is specified. In this case, when the stop command is supplied while the multi-

function input set as the Up or Down signal has been set, the previous edge value is saved continuously and the current frequency is not saved, even when the multi-function input is not set during a stop. The acc/dec time is identical to the time when 0 is set.

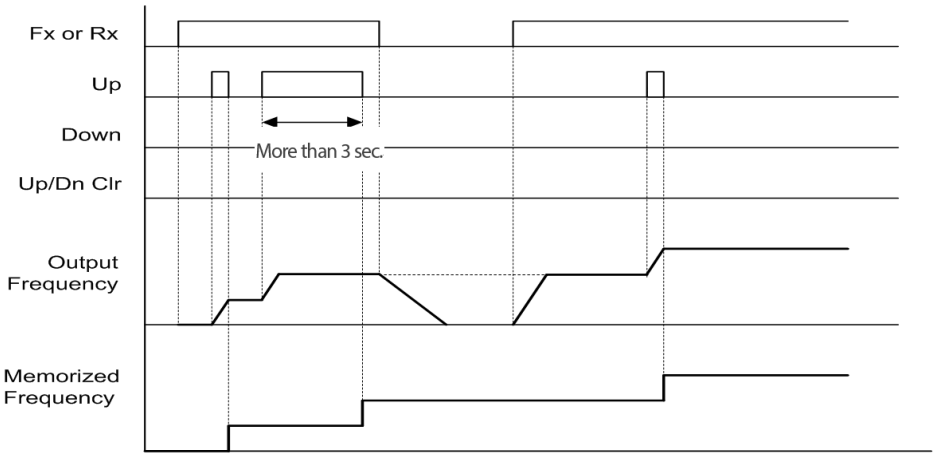

When the Ad66 code is set to 2: The motor accelerates by as much as the step frequency set by the Ad67 code at the multi-function input's positive edge that has been set as the Up terminal signal. The motor operation is identical to when 0 is set when the function is activated for more than 3 seconds. The motor decelerates by as much as the step frequency set at the Ad67 code at the multi-function input's positive edge that has been set as the Down signal. The motor operation is identical to when 0 is set when the function is activated for more than 3 seconds, and the acc/dec time is identical to the time when 0 is set.

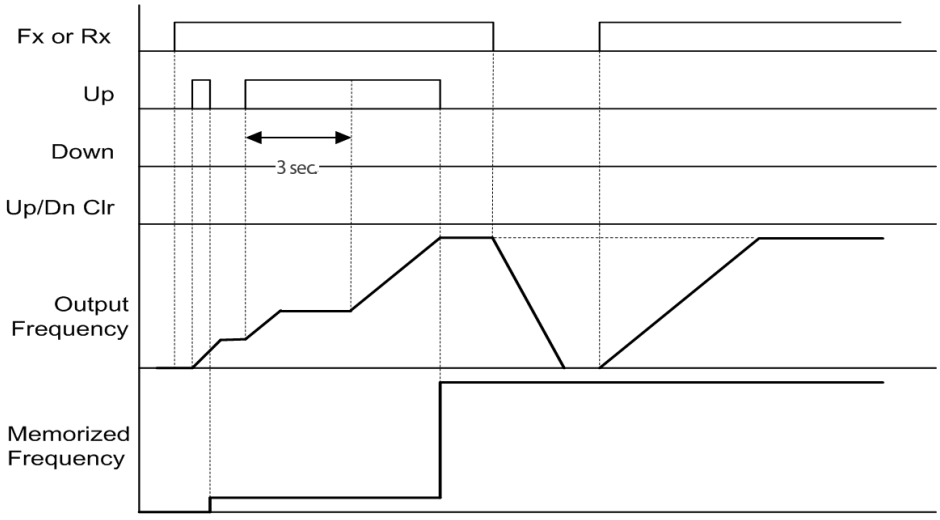

ⓘ Caution

The signal is void when the input is supplied again before it increases 1 step frequency by the Up or Down signal. The frequency at deactivation is saved.

6.4 3-Wire Operation

Group	Code	Name	Parameter Setting	Setting Range	Initial Value	Unit
In (Input Terminal)	65	Multi-function input terminal P1 function setting	-	0–27	0	-
	~	~	~		~	
	69[1)]	Multi-function input terminal P5 function setting	17		4	

1) For models equipped with standard I/O, you can set the parameter by In65–67 (Multi-function input terminal P1–P3).

Select a terminal to use as a 3-wire operation from the multi-function input terminals (standard I/O model: P1–P3, advanced I/O model: P1–P5). The In69 code must be set to 17 (3-wire command) in the Input Terminal group to set the P5 terminal as a 3-wire operation terminal.

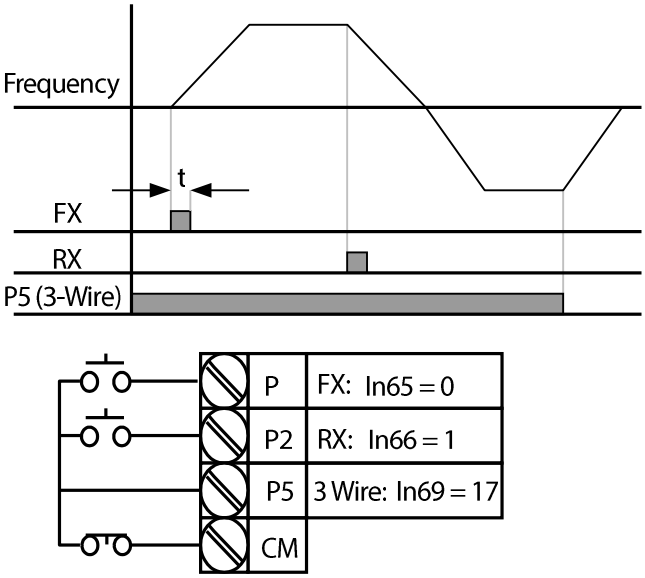

The 3-wire operation latches the signal input (the signal stays on after the button is released) as shown in the diagram above, and is used when operating the inverter with a push button switch.

Pulse width (t) of command in the diagram above must be at least 50 msec.

6.5 Dwell Operation

When an operation command runs, acceleration starts after running by set dwell frequency during dwell operation time. The inverter can be used for dwell frequency operations before opening the mechanical brake of lift-type loads and for opening the brake.

Group	Code	Name	Parameter Setting	Setting Range	Initial Value	Unit
Ad (Advanced)	20	Dwell frequency	-	Start frequency–Maximum frequency	5.00	Hz
	21	Operation time	-	0.0–10.0	0.0	sec

Dwell frequency: A rated slip frequency that supplies the rated torque to the motor before opening the mechanical brake of lift-type loads. The rated slip frequency is different from the rated frequency converted from the rated RPM on the motor rating plate.

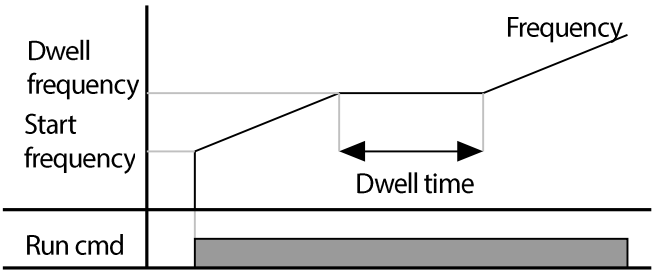

Note

Dwell operation does not work when:

- Dwell operation time is set to 0 sec or dwell frequency is set to 0 Hz.
- Re-acceleration is attempted from stop, as only the first acceleration dwell operation command is valid.

[Dwell operation]

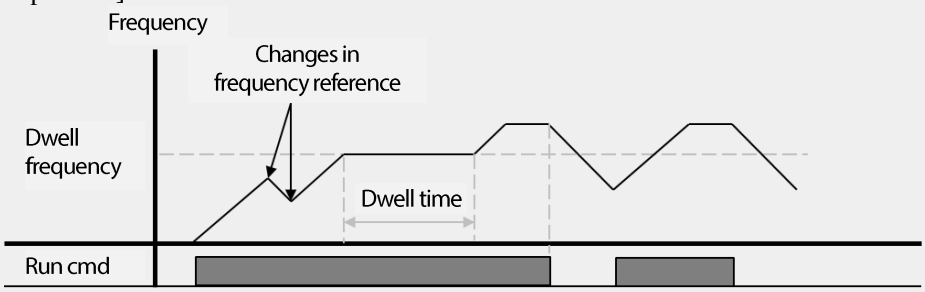

Caution

When a dwell operation is carried out for a lift - type load before its mechanical brake is released, motors can be damaged or their lifecycle reduced due to overflow current in the motor.

6.6 Slip Compensation Operation

Group	Code	Name	Parameter Setting	Setting Range	Initial Value	Unit
Operation	MrC	Motor rated current	-	0.1–150.0	-	A
	MkW	Motor capacity option	-	0.1–2.2	-	kW
bA (Basic)	11	Number of motor poles	-	2–12	4	-
	12	Motor rated slip frequency	-	0.00–10.00	-	Hz
	14	Motor no-load current	-	0.1–100.0	-	A
	15	Motor efficiency	-	50–100	-	%
	16	Load inertia rate	-	0–2	0	-
dr (Drive)	09	Control method option	1	0–1	1	-

(Initial values of the MrC and bA12–15 codes are determined by the MkW parameter.)

Set the dr09 code in the Drive group to 1 (Slip compensation control).

This feature ensures that the motor rotates at a constant speed, by compensating for the motor slip as a load increases.

MkW: Set the capacity of the motor connected to the inverter output terminal.

Code	Name	Parameter Setting	Description
MkW	Motor capacity option	0.1	0.1kW
		~	~
		2.2	2.2kW

bA11: Enter the number of poles from the motor rating plate.

bA12: Enter the motor-rated slip frequency referring to the motor rating plate and the following formula:

$$f_s = f_r - \left(\frac{rpm \times P}{120} \right)$$

f_s = Rated slip frequency
f_r = Rated frequency
rpm = Number of the rated motor rotations
P = Number of motor poles

Example) When the rated frequency is 60 Hz, the number of the rated motor rotations is 1740 rpm, and the number of motor poles is 4:

$$f_s = 60 - \left(\frac{1740 \times 4}{120} \right) = 2Hz$$

MrC: Enter the rated current from the motor rating plate.

bA14: Enter the measured current when the load on the motor axis is removed and when the motor is operated at the rated frequency. If no-load current is difficult to measure, enter a current equivalent to 40 % of the rated motor current.

bA15: Enter the efficiency from the motor rating place.

bA16: Select load inertia based on motor inertia.

Code	Name	Parameter Setting	Description
bA16	Inertia rate	0	Less than 10 times motor inertia
		1	10 times motor inertia
		2	More than 10 times motor inertia

For the induction motor, the difference between the number of motor rotations and frequency (synchronous speed) increases according to the load rate as shown in the graph below. Therefore, the slip compensation control is used when the speed difference must be decreased.

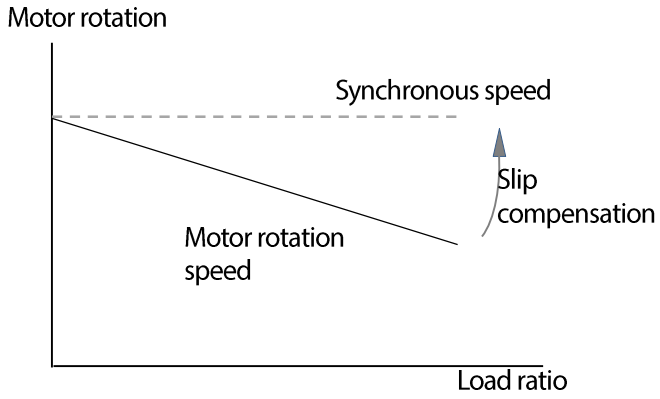

6.7 PID Control

Group	Code	Name	Parameter Setting	Setting Range	Initial Value	Unit
AP (Application)	01	PID control selection	1	0–1	0	-
	18[1)2)]	PID feedback	-	0.00–400.00 / 0.0 –100.0	0.00 / 0.0	Hz / %
	19[1)2)]	PID reference	-	0.00– Max frq. / 0.0–100.0	0.00 / 0.0	Hz / %
	20[1)]	PID reference source	-	0–5	0	-
	21[1)]	PID feedback source	-	0–3	2	-
	22[1)]	PID controller P gain	-	0.0–999.9	300.0	%
	23[1)]	PID controller integral time (I gain)	-	0.10–32.00	1.00	sec
	24[1)]	PID controller differentiation time (D gain)	-	0.00–30.00	0.00	sec
	28[1)]	PID mode	-	0–1	0	-
	29[1)]	PID output frequency upper limit	-	PID output frq. Lower limit–	60.00	Hz

Group	Code	Name	Parameter Setting	Setting Range	Initial Value	Unit
				Max frq.		
	30[1)]	PID output frequency lower limit	-	Start frq.– PID output frq. upper limit	0.50	Hz
	02[1)]	PID scale selection	-	0–1	0	-
	37[1)]	Sleep mode delay time	-	0.0–2000.0	60.0	sec
	38[1)]	Sleep mode frequency	-	0.00–Max frq.	0.00	Hz
	39[1)]	Wake-up Level	-	0.0–100.0	35.0	%
In (Input Terminal)	65	Multi-function input terminal function setting	21	0–27	-	-

1) Available when the AP01 code is set to 1.

2) The parameter of the AP19 and AP20 codes are displayed in a different format depending on the AP02 parameter. (Frequency when AP02=0, percentage when AP02=1)

6.7.1 PID Basic Control

PID control provides constant automated control of flow, pressure, and temperature by adjusting the output frequency of the inverter.

Set the AP01 code to 1 (PID operation) in the Application (AP) group. Then, you can set the PID reference at AP19 and monitor the actual PID feedback volume.

There are 2 types of PID operation mode; normal PID mode and process PID mode. You can set the PID operation mode by AP28 (PID mode).

AP21: Set the feedback source of the PID controller.

Code	Name	Parameter Setting	Description
AP21	PID feedback source	0	I2 (I input) of analog input terminal (0–20 [mA])[1)]
		1	I2 (V input) of analog input terminal (0–10 [V])[1)]
		2	V1 terminal input of analog input terminal block (0–10 [V])
		3	RS-485 communication[1)2)]

1) Available only for models equipped with advanced I/O.

2) When you input the PID feedback via RS-485 communication, you can read and/or write in 0.1 % increments using 0x001E (common address), regardless of the AP02 (PID unit selection) value.

AP22: Sets the P gain as the output ratio to the error rate. If the P gain is set to 50%, 50% of the error

is output. Higher input value leads to reaching the target control variable faster, but oscillation may occur at the controller when the value is too high.

AP23: Sets the time to output accumulated errors. When the error is 100%, the time taken for 100% output is set. When the integral time is set to 1 second, 100% output occurs after 1 second of the error remaining at 100%. Differences in a normal state can be reduced by the integral time. Adjusting the value leads to a faster response, but oscillation may occur at the controller.

AP24: Sets the output volume for the rate of change in errors. M100 detects error every 1 ms. When the differential time is set to 1 ms and the rate of change in errors per sec is 100%, output occurs at 1% per 10 ms.

AP28: Adds the set target to the PID controller and sets the volume of the target.

AP29, AP30: Limits the output of the controller.

AP20: Selects the PID reference source.

AP02: You can set the unit of the PID reference (AP19) and PID feedback (AP18) to Hz (frequency) or % (percentage). (AP02 = 0: Hz, AP02 = 1: %)

In65–In69: When one the multi-function input terminal P1–P5 is set to 21 (PID switch operation) and turn the terminal ON, the PID control is switched to normal PID control where the command frequency is operated as the PID reference but not as the PID controller output.)

rPM: Converts the feedback volume set at AP21 to motor frequency.

When running the PID switch operation, the output frequency is displayed, but the feedback volume is not displayed.

Normal PID operation (AP28=0)

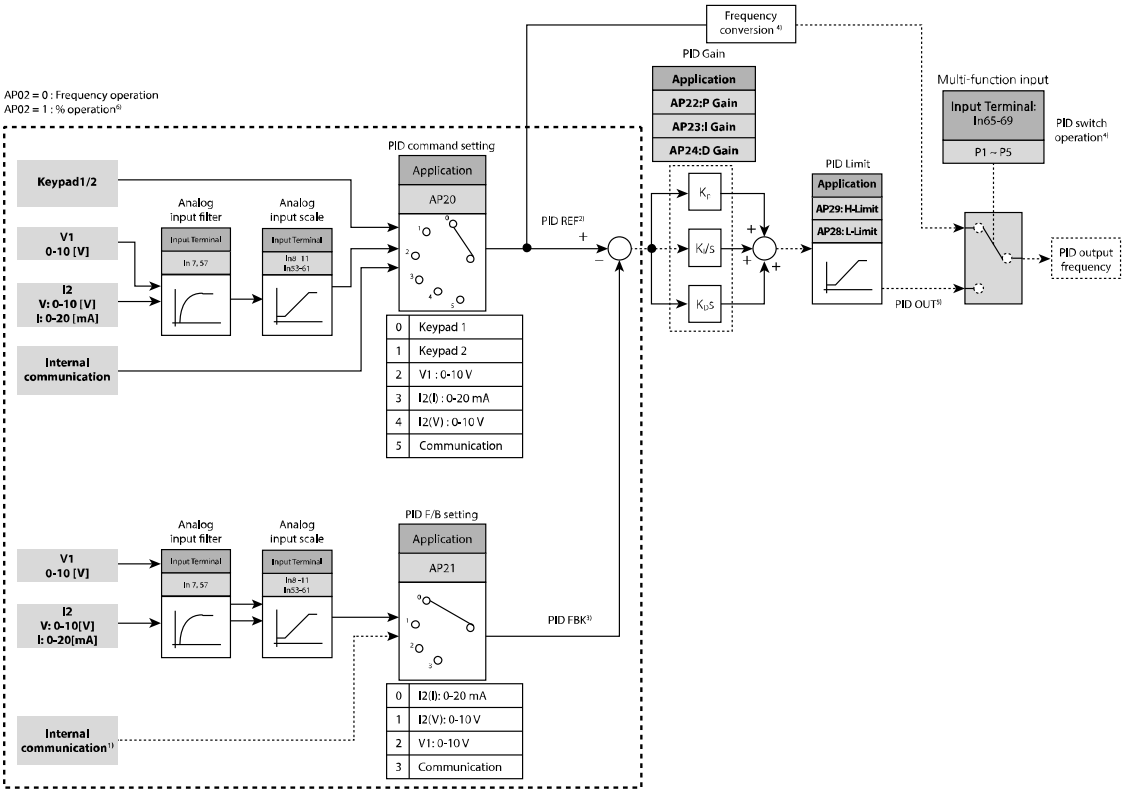

Normal PID control block diagram

1) RS-485 communication is added to the PID feedback group.
2) PID REF (PID reference) value can be checked and configured at AP19.
   When AP02 = 0, the unit is set to [Hz]. When AP02 = 1, the unit is set to [%].
3) PID FBK (PID feedback volume) value can be checked at AP18. The unit is identical to the unit of the AP19 parameter value.
4) When the PID switch operation (21, PID operation switched to normal operation) signal is input to the multi-function input (standard I/O model: P1–P3, advanced I/O model: P1–P5) while the AP02 is set to 1, percentage value is converted and output to the frequency value.
5) Polarity of PID OUT (Normal PID output) is unipolar, and it is limited by AP29 (H-Limit, Frequency jump upper limit 1) and AP28 (L-Limit, Frequency jump lower limit 1).
6) 100.0% is the FrM (maxFreq that is the maximum frequency) parameter setting.

Process PID operation (AP28=1)

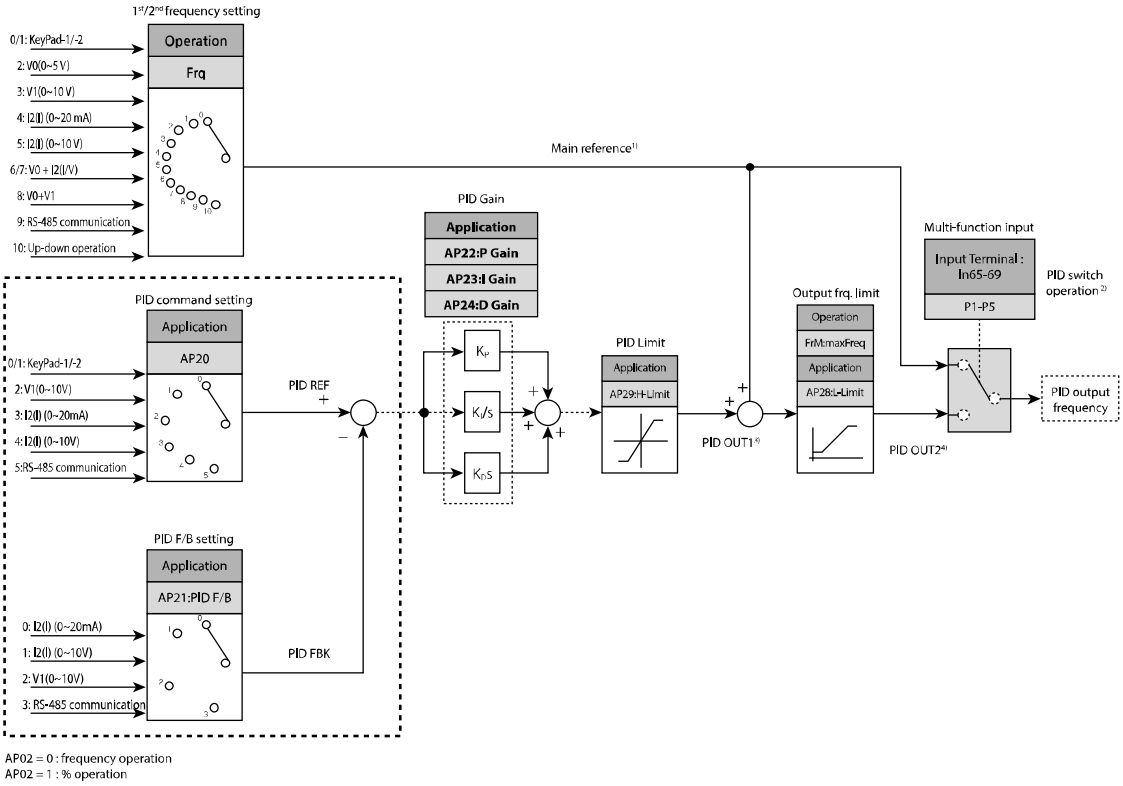

Process PID control block diagram

1) Main reference is a frequency (Frq=10, Up/Down operation excluded) set at the Frq/bA05 codes in the Operation group, and the actual output frequency is the main reference and PID OU2 (PID block output).
2) When the PID switching operation is selected, the main reference becomes the actual output frequency.
3) PID OU1, the output in the PID block diagram, is bipolar and the parameter is limited by the AP29 (PID upper limit) code.
4) PID OU2 is the actual frequency and is limited by the FrM (maxFreq, the maximum frequency) and AP28 (L-Limit, frequency jump lower limit 1) codes.

Other operations are identical to those using normal PID operation.

PID Sleep & Wake-up

The inverter automatically enters sleep mode and stops operating when the PID controller's output frequency is maintained at the sleep frequency (AP38) for sleep delay time (AP37). Monitoring still operates in the sleep mode, and the inverter wakes up and runs again when deviation between the PID reference and the feedback volume becomes higher than the wake-up level (AP39).

Sleep mode is disabled when a stop command is input.

This feature can be used, for example, at night when the flow rate to the pump load is low.

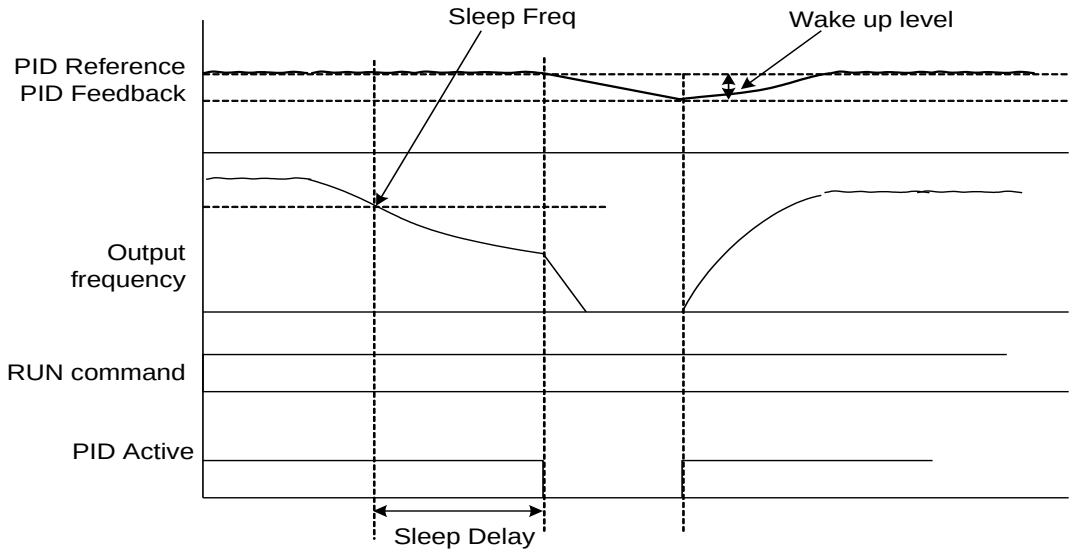

6.8 Energy Saving Operation

Group	Code	Name	Parameter Setting	Setting Range	Initial Value	Unit
Ad (Advanced)	51	Energy saving operation	-	0–30	0	%

You can set the reduced amount of the output voltage at the Ad51 code based on the maximum output voltage (IOv).

This operation is used to save energy by reducing the voltage supplied to motors during low-load and no-load conditions when a fan or pump is operating.

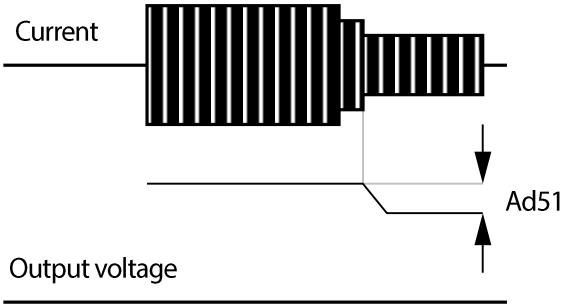

6.9 Speed Search Operation

Group	Code	Name	Parameter Setting	Setting Range	Initial Value	Unit
Cn (Control)	71	Speed search selection	-	0000–1111	0000	Bits
	72	Speed search current level	-	80–200	100	%
	73	Speed search P gain	-	0–9999	500	-
	74	Speed search I gain	-	0–9999	1000	-
OU (Output Terminal)	31/ 32	Multi-function relay function selection / Multi-function output 2nd function selection	15	0 –19	17	-

This operation is used to prevent fault trips that can occur while the inverter output voltage is disconnected and the motor is idling.

Because this feature estimates the motor rotation speed based on the inverter output current, it does not give the exact speed.

You can select a speed search operation from the following four types.

Code	Name	BIT	Function
Cn71	Speed search selection	---1	Speed search for general acceleration
		--1-	Initialization after a fault trip (Pr08=1)
		-1--	Restart after instantaneous power interruption
		1---	Starting with power-on (Ad10)

Cn72: The amount of current flow is controlled during speed search operation based on the motor's rated current (MrC).

Cn73, Cn74: The P/I gain of the speed search controller can be adjusted. The P/I gain are adjusted according to the characteristics of a load.

OU31, OU32: Outputs the speed search operation state to the external sequence using a multi-function relay (3ABC).

Example) After an instantaneous power interruption

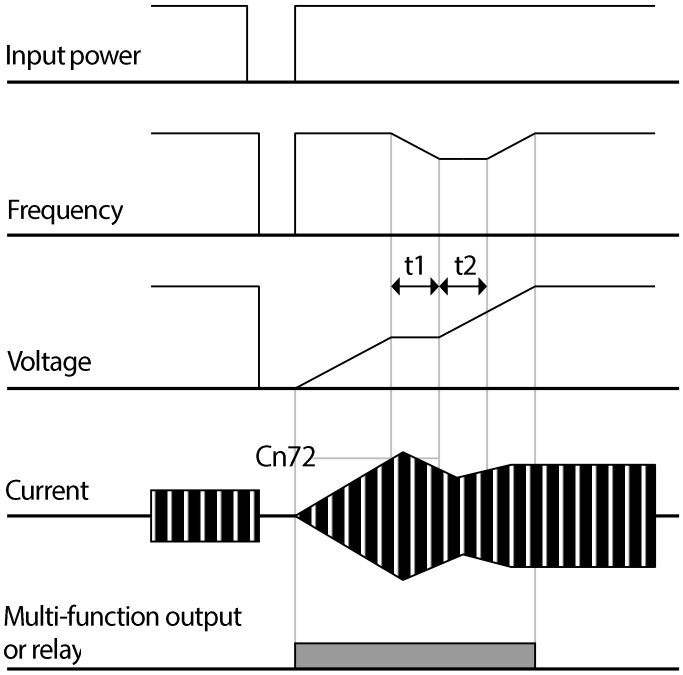

If an instantaneous power interruption occurs and the input power is disconnected, the inverter generates a low voltage trip and blocks the output.

When the input power returns, the operation frequency before the low voltage trip and the voltage is increased by the inverter's inner PI control.

t1: If the current increases above the value set at Cn72, the voltage stops increasing and the frequency decreases.

t2: If the current decreases below the value set at Cn72, the voltage increases again and the frequency stops decelerating.

When the normal frequency and voltage are resumed, the speed search operation accelerates the motor back to its frequency reference before the fault trip.

Speed search operation is suitable for loads with high inertia. When the load with high friction force occurs, stop and restart the inverter.

If operated within the rated output, the M100 series inverter is designed to withstand instantaneous power interruptions within 15 ms and maintain normal operation.

The DC voltage inside the inverter may vary depending on the output load. If the power interruption time is longer than 15 ms, a low voltage trip may occur. The instantaneous power interruption specification is applied when the input voltage is 200–240 VAC.

6.10 Auto Restart Settings

Group	Code	Name	Parameter Setting	Setting Range	Initial Value	Unit
Pr (Protection)	09	Auto restart count	-	0–10	0	count
	10	Auto restart delay time after trip	-	0.0–60.0	1.0	sec

Auto restart count can be set using the Pr09 code.

An auto restart is used to activate the inverter protection feature and protect the inverter from noise or other problems, therefore preventing the shutdown of the system.

Pr09: When a trip occurs and the run command is input after the trip, the inverter protection feature is activated and the inverter restarts automatically after the set time programmed at the Pr10 code. At each restart, the inverter counts the number of tries and subtracts it from the number set at the Pr09 code until the retry number count reaches 0. The retry number count returns to the original setting when you manually reset it using the inverter terminal block or the [STOP/RESET] key, and when a trip does not occur within 30 seconds after an auto restart.

If the inverter stops due to low voltage, emergency stop (Bx), inverter overheating, or hardware diagnosis, an auto restart is not activated.

The inverter start acceleration automatically after the auto restart delay time set by the Pr10 code. At auto restart, the acceleration options are identical to those of speed search operation (Cn71–74).

The following graph is an example when the auto restart count is set to 2.

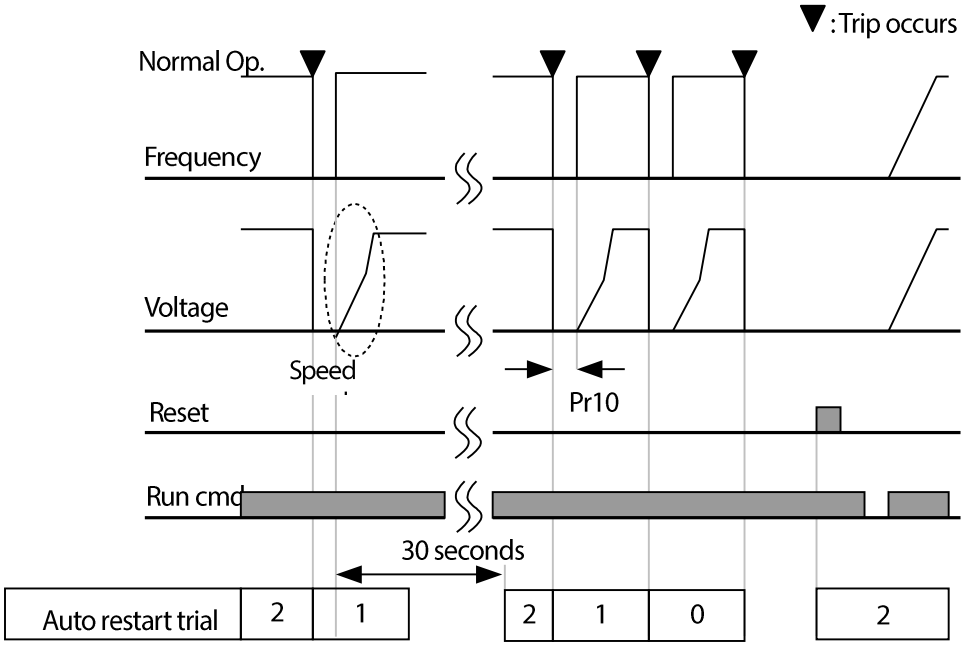

6.11 Operational Noise Settings (carrier frequency settings)

Group	Code	Name	Parameter Setting	Setting Range	Initial Value	Unit
Cn (Control)	04	Carrier frequency	-	1.0–15.0	3.0	kHz

An operational noise can be selected. There are pros and cons according to the operational noise volume as described in the table below.

Code	Parameter Setting	Pros and Cons
Cn04	High carrier frequency	Low motor noise
		Increased heat loss
		Increased inverter noise
		Increased inverter leakage current

6.12 2nd Motor Operation

The 2nd motor operation is used when a single inverter switch operates two motors with different type of loads. Note that this operation does not operate the two motors simultaneously.

Group	Code	Name	Parameter Setting	Setting Range	Initial Value	Unit
M2 (Secondary Motor)[1]	04	2nd motor acceleration time	-	0.0–6000.0	5.0	sec
	05	2nd motor deceleration time	-	0.0–6000.0	10.0	sec
	07	2nd motor base frequency	-	30.00–Max frq.	60.00	Hz
	12	2nd motor rated current	-	0.1–100.0	-	A
	25	2nd motor V/F pattern	-	0–2	0	-
	26	2nd motor forward torque boost	-	0.0–15.0	4.0	%
M2 (Secondary Motor)[1]	27	2nd motor reversed torque boost	-	0.0–15.0	4.0	%
	28	2nd motor stall level	-	30–150	150	%
	29	2nd motor electric thermal 1 min level	-	2nd motor electric thermal continuous operation level (M2-30) –200	150	%
	30	2nd motor electric thermal continuous operation level	-	50– 2nd motor electric thermal 1 min level (M2-29)	100	%
In (Input Terminal)	65	Multi-function input terminal P1 function setting	-	0–27	0	-
	~	~	~		~	~
	69[2]	Multi-function input terminal P5 function setting	12		4	-

1) Available when one of the multi-function input terminal codes is set to 12 (Second motor selection).

2) For models equipped with standard I/O, you can set the parameter by In65–67 (Multi-function input terminal P1–P3).

Select a terminal to use as a second motor selection operation from the multi-function input terminals (standard I/O model: P1–P3, advanced I/O model: P1–P5) and set the corresponding code (In65–In69) to 12 (Second motor selection).

When the P5 terminal is selected, set the In69 code of the I/O Terminal groups to 12.

Select a motor between two motors connected to the inverter output terminals using the multi-

function terminals. When the first motor stops, you can run the second motor by the M2-04–30 parameters and the second motor selection terminal input.

Input the signal to the second motor selection terminal after the motor stops.

The M2-04, M2-05, M2-07, M2-12, and M2-25–M2-30 codes are identical to the parameter function parameter.

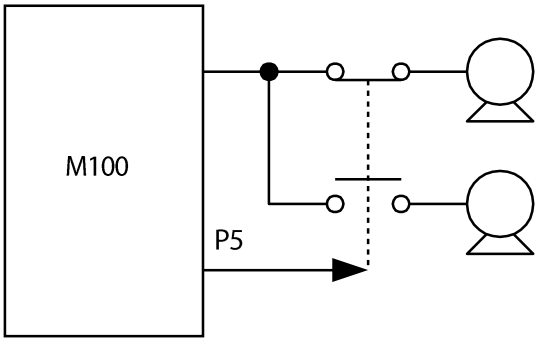

6.13 Frequency Setting and 2nd Operation Mode Setting

The 2nd operation mode enables switching the parameter setting of the frequency reference source and run command to the second parameter setting simultaneously using multi-function terminals. For example, you can stop using the remote control that is operated using the communication option and start control on the inverter unit.

Group	Code	Name	Parameter Setting	Setting Range	Initial Value	Unit
Operation	drv	1st Command source	-	0–3	1	-
	Frq	1st Frequency reference source	-	0–10	0	-
bA (Basic)	04[1)]	2nd Command source	-	0–3	1	-
	05[1)]	2nd Frequency reference source	-	0–10	0	-
In (Input Terminal)	65–69[2)]	Multi-function output terminal function setting	22	0–27	-	-

1) Set one of the multi-function input terminal codes (standard I/O model: In65–67, advanced I/O model: In65–69) to 22 (2nd Source).

2) In68 and In69 are available only for models equipped with advanced I/O.

The 1st operation mode is an operation without a 2nd source input set by the multi-function input (In65–69).

Switching between the 1st and 2nd operations is enabled by turning ON/OFF the selected multi-function input terminal.

The command source and frequency reference source are set by the 1st operation mode when the multi-function terminal set as the 2nd operation mode is OFF. When the multi-function terminal is ON, the command source and frequency reference source are set by the 2nd operation mode.

The following table details for bA04 and bA05 setting of the 2nd operation mode. The setting method is the same as the 1st command source (drv) and the 1st frequency reference source (Frq).

Code	Name	Parameter Setting	Description	
bA04	Command source 2	0	Operation via the [RUN] and [STOP/RESET] keys	
		1	Terminal block operation	FX: Forward operation command
				RX: Reverse operation command
		2		FX: Run command, stop command
				RX: Select rotation direction (forward or reverse)
		3	Operation via the RS-485 communication[1)]	
bA05	Frequency reference source 2	0	Digital	Keypad as digital frequency setting source 1
		1		Keypad as digital frequency setting source 2
		2	Analog	Integrated volume operation: 0–5 [V]
		3		Terminal block's V1 terminal: 0–10 [V]
		4		Terminal block's I2 (I) terminal: 0–20 [mA][1)]
		5		Terminal block's I2(V) terminal: 0–10[V][1)]
		6		Integrated volume and terminal block I2 (I)[1)]
		7		Integrated volume and terminal block I2 (V)[1)]
		8		Integrated volume and terminal block V1
		9	Operation via the RS-485 communiction[1)]	
		10	Up-down operation	

1) Available only for models equipped with advanced I/O.

The following table details the operation settings when switching between the 1st operation mode and the 2nd operation mode.

Group	Code	Name	Parameter Setting	Setting Range	Initial Setting	Unit
Operation	drv	(1st) Command source	3	0–3	1	-
	Frq	(1st) Frequency reference source	0	0–10	0	-
bA (Basic)	04	2nd Command source	1	0–3	1	-
	05	2nd Frequency reference source	0	0–10	0	-
In (Input Terminal)	69[1)]	Multi-function input P5 input terminal	22	0–27	4	-

1) For models equipped with standard I/O, you can set the parameter by In65–67 (Multi-function input terminal P1–P3

The operation is as shown in the graph below when the parameters are set as above, the command frequency is set to 30 Hz, and Ad08=0.

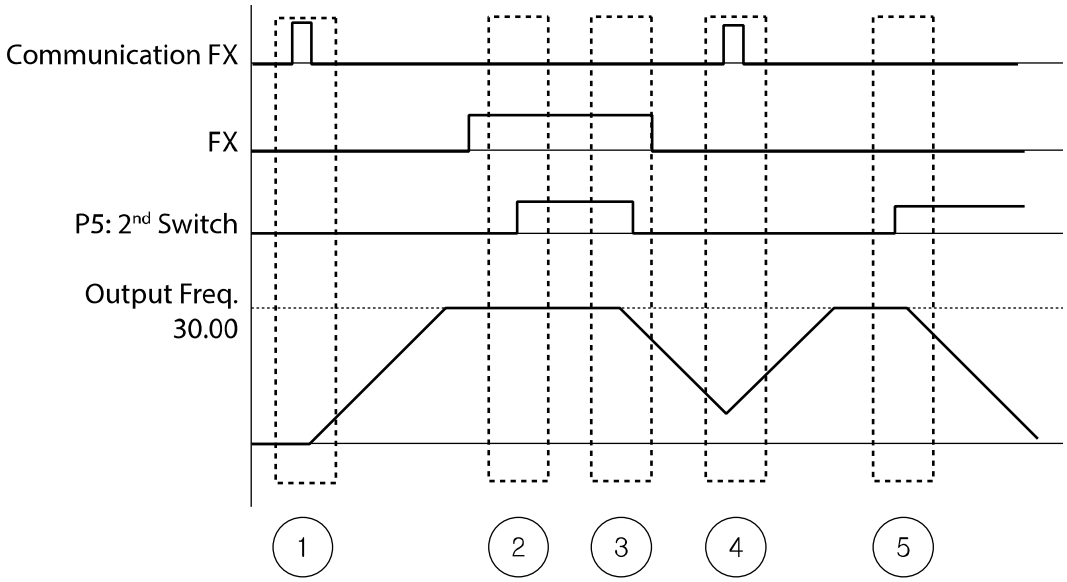

① Accelerates to the set frequency for the acceleration time by receiving the FX signal as the 1st operation command.

② The P5 terminal input is ON and the operation mode is switched to the 2nd operation mode. With the bA04 code set to Terminal operation 1, the inverter keeps operating while the FX terminal is ON.

③ The P5 terminal input is OFF and the operation mode is switched to the 1st operation mode. With the drv code set to the operation command, the inverter decelerates and stops according to the stop command.

④ With the communication FX signal (1st operation command) ON, the inverter accelerates to the set frequency.

⑤ The P5 terminal input is ON and the operation mode switches to the 2nd operation mode. With the bA04 code set to Terminal operation 1 and FX terminal set to OFF, the inverter decelerates and stops.

Caution

When setting the multi-function terminal (standard I/O model: P1–P3, advanced I/O model: P1–P5) is set to the 2nd command source (2nd Source) and input (ON) the signal, operation state is changed because the frequency setting and the Operation command will be changed to the 2nd command. Before shifting input to the multi-function terminal, ensure that the 2nd command is correctly set.

6.14 Input Voltage Setting

Group	Code	Name	Parameter Setting	Setting Range	Initial Value	Unit
bA (Basic)	19	Inverter input voltage	-	170–240	220	V

The inverter input voltage can be set at the bA19 code.

The low voltage trip level is modified according to the input voltage.

6.15 Parameter Initialization

Group	Code	Name	Parameter Setting		Initial Value
CF (Configuration)	93	Parameter initialization	0	Do not initialize	0
			1	Initialize all groups	
			2	Initialize Operation group	
			3	Initialize dr group	
			4	Initialize bA group	
			5	Initialize Ad group	
			6	Initialize Cn group	
			7	Initialize In group	
			8	Initialize OU group	
			9	Initialize CM group	
			10	Initialize AP group	
			11	Initialize Pr group	
			12	Initialize M2 group	
			13	Initialize CF group	

Select a group to initialize and then execute the initialization at the CF93 code.

Set the parameter value at the CF93 code and press the [ENT] key. After the initialization is complete, CF93 is displayed again.

Password Registration

Group	Code	Name	Parameter Setting	Setting Range	Initial Value	Unit
CF (Configuration)	94	Password registration	-	0000–FFFF	0000	-
	95	Parameter lock	-	0000–FFFF	0000	-

Register a password to prevent unauthorized modification of parameter settings (CF95). The password must be comprised of hexadecimal characters (0–9, A, b, C, d, E, F).

Caution

If you locked the parameter using a password, you must use the password to disable the parameter lock. Therefore, it is very important that you memorize the password.

The factory default password is ‘0000.’ When first registering a password, enter any password except for ‘0000.’

Follow the instructions below when you first register a password.

Step	Instruction	Keypad Display
1	Go to the CF94 code.	cf94
2	Press the [ENT] key twice.	0000
3	Register the password (for example, ‘0123’).	0123
4	The password flashes.	0123
5	Press the [ENT] key.	--cf94_

Follow the instructions below to change the password. The following example details changing the current password ‘0123’ to a new password ‘0456.’

Step	Description	Keypad Display
1	Go to the CF94 code.	cf94
2	Press the [ENT] key.	0000
3	Try entering different passwords from the current password (for example, ‘0122’), and then press the [ENT] key.	0122
4	‘0’ is displayed when the wrong password is entered. You cannot change the password.	0000
5	Enter the correct current password.	0123
6	Press the [ENT] key.	0123
7	Enter a new password.	0456
8	Press the [ENT] key again. The new password will flash.	0456
9	Press the [ENT] key.	cf94

6.16 Parameter Lock

Group	Code	Name	Parameter Setting	Setting Range	Initial Value	Unit
CF (Configuration)	95	Parameter lock	-	0000–FFFF	0000	-
	94	Password registration	-	0000–FFFF	0000	-

Use parameter lock to prevent unauthorized modification of parameter settings. To enable parameter lock, register and enter a user password first.

Follow the instructions below to prevent unauthorized modification of parameter settings using the password registered at the CF94 code.

Step	Instruction	Keypad Display
1	Go to the CF95 code.	cf95
2	Press the [ENT] key.	ul
3	‘UL’ (Unlock) is displayed when the parameter settings can be modified.	ul
4	Press the [ENT] key.	0000
5	Enter the value registered at the CF94 code (for example, ‘0123’).	0123

Step	Instruction	Keypad Display
6	Press the [ENT] key.	l
7	'L' (Lock) is displayed when the parameter settings cannot be modified.	l
8	Press the [ENT] key.	cf95

Follow the instructions below to disable parameter lock settings using the password registered at the CF94 code.

Step	Instruction	Keypad Display
1	Go to the CF95 code.	cf95
2	Press the [ENT] key.	l
3	'L' (Lock) is displayed when the parameter settings cannot be modified.	l
4	Press the [ENT] key.	0000
5	Enter the value registered at the CF94 code (for example, '0123').	0123
6	Press the [ENT] key.	ul
7	'UL' (Unlock) is displayed when the parameter settings can be modified.	ul
8	Press the [ENT] key.	cf95

6.17 Voltage Trip Prevention During Deceleration

Voltage trip prevention during deceleration uses regenerative brake force to prevent over voltage trips when the inverter decelerates or stops.

Group	Code	Name	Parameter Setting	Setting Range	Initial Value	Unit
Ad (Advanced)	08	Stop mode	0	0–2	0	-
Pr (Protection)	50	BIT 0 (--1): Stall protection during acceleration BIT 1 (-1-): Stall protection while operating at a constant speed BIT 2 (1--): Stall protection during deceleration	-	000–111	000	Bits
	53[1)]	Voltage limit during deceleration	0	0–1	0	-

1) Pr53 (Voltage limit during deceleration) is available when BIT2 of the Pr50 code is set to 1.

To enable the over voltage trip during deceleration, set BIT2 of the Pr50 code to 1. The stall prevention during deceleration is enabled only during deceleration.

6.18 Brake Control

Group	Code	Name	Parameter Setting	Setting Range	Initial Value	Unit
dr (Drive)	09	Control mode	0	0–1	1	-
Ad (Advanced)	41[1)]	Brake open current	-	0.0–180.0	50.0	%
	42[1)]	Brake open delay time	-	0.00–10.00	1.00	sec
	44[1)]	Brake open forward frequency	-	0.00–Max frq.	1.00	Hz
	45[1)]	Brake open reverse frequency	-	0.00–Max frq.	1.00	Hz
	46[1)]	Brake close delay time	-	0.00–10.00	1.00	sec
	47[1)]	Brake close frequency	-	0.00–Max frq.	2.00	Hz
OU (Output Terminal)	31/ 32	Multi-function relay function setting / Multi-function output 2 function setting	19	0–19	17	-

1) Ad41, Ad42, and Ad44–47 are available when OU31 or OU32 is set to 19.

Brake control is used to control the On/Off operation of the electronic brake load system and is enabled only when the dr09 code is set to 0 (V/F steady control). Therefore, check the control mode first and then configure the sequence.

The DC braking and dwell operation are disabled at startup with the brake control enabled.

Brake release sequence

During motor stop state, if an operation command is entered, the inverter accelerates up to brake release frequency (Ad44– 45) in forward or in reverse direction. After reaching brake release frequency, if motor current reaches brake release current (Ad41), the output relay or multi-function output terminal for brake control sends a release signal. Once the signal has been sent, acceleration will begin after maintaining frequency for brake release delay time (Ad42).

Brake engage sequence

If a stop command is sent during operation, the motor decelerates. Once the output frequency reaches brake engage frequency (Ad47), the motor stops deceleration and sends out a brake engage signal to a preset output terminal. Frequency is maintained for the brake engage delay time (Ad46) and will become 0 afterwards.

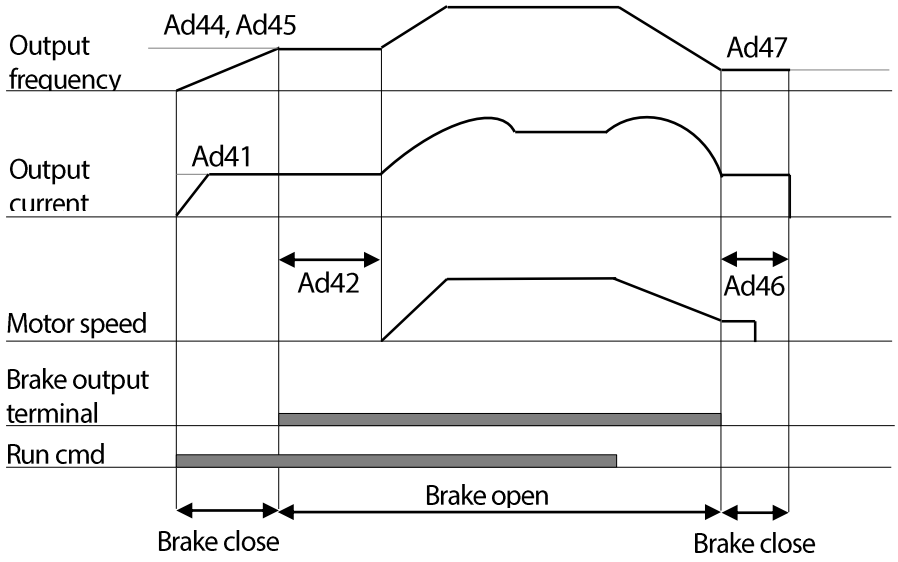

V/F Steady Control

Caution

The external brake control is used only when the control mode is set to V/F steady control and the brake open frequency is lower than the brake close frequency.

6.19 Analog Output

An output size can be adjusted by selecting an output option at the AO (Analog Output) terminal.

OU01: Outputs a selected output option in the following table at the AO (Analog Output) terminal.

Group	Code	Name	Parameter Setting	Setting Range	Initial Value	Unit
OU (Output Terminal)	01	Analog output option	-	0–3	0	-
	02	Analog output level	-	10–200	100	%

Code	Name	Parameter Setting		Outputs for 10V
OU01	Analog output option	0	Output frequency	Maximum frequency (FrM)
		1	Output current	150% of the inverter rated current
		2	Output voltage	AC 282 V
		3	Inverter DC voltage	DC 410 V

OU02: Adjusts the analog output value based on various meters when an analog output is used as the input to the meter.

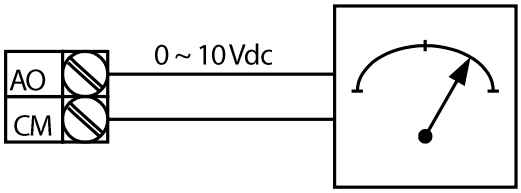

6.20 Digital Output

6.20.1Multi-function Relay Output Terminal Settings

Set an output option for the inverter relay.

Group	Code	Name	Setting Range		Initial Value
OU (Output Terminal)	31 /32[1]	Multi-function relay function /Multi-function output 2 function	0	FDT-1	17
			1	FDT-2	
			2	FDT-3	
			3	FDT-4	
			4	FDT-5	
			5	Overload (OL)	
			6	Inverter overload (IOL)	
			7	Motor stall (STALL)	
			8	Over voltage trip (Ovt)	
			9	Low voltage trip (Lvt)	
			10	Inverter cooling pin overheat (OHt)	
			11	Lost command	
			12	RUN	
			13	Stop	
			14	Steady	
			15	Speed search	
			16	Ready	
			17	Trip output	
			18	Cooling fan abnormal condition warning	
			19	Brake control signal	
	30 [1]	Fault output	**bit**	**000–111**	010
			--1	When the low voltage trip occurs	
			-1-	When a trip occurs except low voltage trip	
			1--	After a trip occurs while Pr09 (Auto restart count) has been set	

1) OU30: The multi-function output terminal and relay with the OU30 settings operate when the OU31 or OU32 code is set to 17 (Trip output).

Multi-function Relay Function/Multi-function Output 2 Function Setting Details

<table>
<tr><th>OU31 (OU32) Parameter Setting</th><th>Description</th></tr>
<tr><td>0 : FDT-1</td><td>Detects inverter output frequency reaching the user set frequency. Outputs a signal when the absolute value (set frequency–output frequency) ≤ detected frequency width/2.
<table>
<tr><th>Group</th><th>Code</th><th>Name</th><th>Parameter Setting</th><th>Setting Range</th><th>Initial Value</th><th>Unit</th></tr>
<tr><td>OU (Output Terminal)</td><td>58</td><td>Detection frequency band</td><td>-</td><td>0.00–Max frq.</td><td>10.00</td><td>Hz</td></tr>
</table>
When the OU58 code is set to 10.0, the FDT-1 output is as shown in the graph.
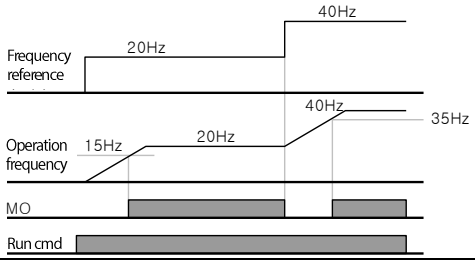
</td></tr>
<tr><td>1 : FDT-2</td><td>Outputs a signal when the user set frequency and detected frequency (OU57) are equal, and fulfills FDT-1 condition at the same time.

(Set frequency = detected frequency) &[FDT-1]
<table>
<tr><th>Group</th><th>Code</th><th>Name</th><th>Parameter Setting</th><th>Setting Range</th><th>Initial Value</th><th>Unit</th></tr>
<tr><td rowspan="2">OU (Output Terminal)</td><td>57</td><td>Detection frequency</td><td>-</td><td rowspan="2">0.00–Max frq.</td><td>30.00</td><td rowspan="2">Hz</td></tr>
<tr><td>58</td><td>Detection frequency band</td><td>-</td><td>10.00</td></tr>
</table>
When the OU57, OU58 codes are set to 30 Hz and 10 Hz respectively, FDT-2 output is as shown in the graph.
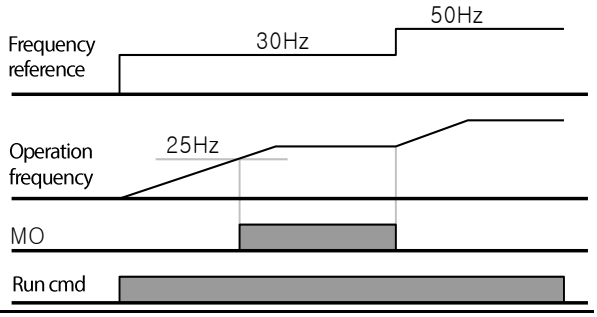
</td></tr>
</table>

<table>
<tr><th>OU31 (OU32) Parameter Setting</th><th>Description</th></tr>
<tr><td>2 : FDT-3</td><td>
Outputs a signal when the Absolute value (output frequency–operation frequency) ≤ detected frequency width/2.
<table>
<tr><th>Group</th><th>Code</th><th>Name</th><th>Parameter Setting</th><th>Setting Range</th><th>Initial Value</th><th>Unit</th></tr>
<tr><td rowspan="2">OU (Output Terminal)</td><td>57</td><td>Detection frequency</td><td>-</td><td rowspan="2">0.00–Max frq.</td><td>30.00</td><td rowspan="2">Hz</td></tr>
<tr><td>58</td><td>Detection frequency band</td><td>-</td><td>10.00</td></tr>
</table>
When the OU57, OU58 codes are set to 30 Hz and 10 Hz respectively, FDT-3 output is as shown in the graph.
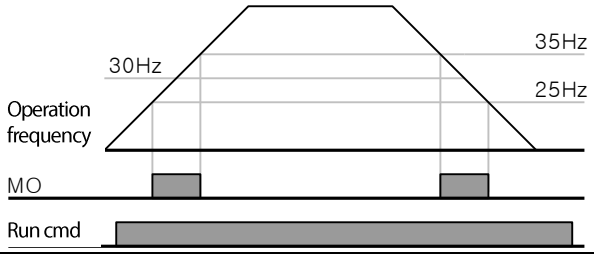

</td></tr>
<tr><td>3 : FDT-4</td><td>
Outputs a signal in the following conditions:

In acceleration: Operation frequency≧ Detected frequency
In deceleration: Operation frequency>(Detected frequency–Detected frequency width/2)

<table>
<tr><th>Group</th><th>Code</th><th>Name</th><th>Parameter Setting</th><th>Setting Range</th><th>Initial Value</th><th>Unit</th></tr>
<tr><td rowspan="2">OU (Output Terminal)</td><td>57</td><td>Detection frequency</td><td>-</td><td rowspan="2">0.00–Max frq.</td><td>30.00</td><td rowspan="2">Hz</td></tr>
<tr><td>58</td><td>Detection frequency band</td><td>-</td><td>10.00</td></tr>
</table>
When the OU57, OU58 codes are set to 30 Hz and 10 Hz respectively, FDT-4 output is as shown in the graph.
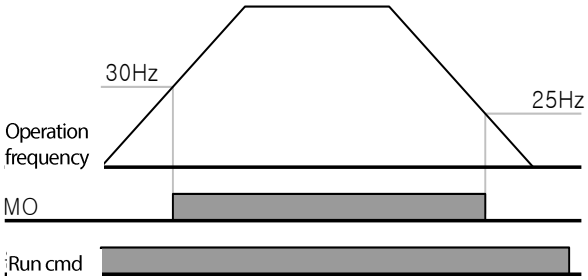

</td></tr>
</table>

<table>
<tr><th>OU31 (OU32) Parameter Setting</th><th>Description</th></tr>
<tr><td>4 : FDT-5</td><td>Outputs a signal to the B contact, in reverse to the FDT-4, in the following conditions:

In acceleration: Operation frequency ≥ Detected frequency
In deceleration: Operation frequency>(Detected frequency–Detected frequency width/2)

<table>
<tr><th>Group</th><th>Code</th><th>Name</th><th>Parameter Setting</th><th>Setting Range</th><th>Initial Value</th><th>Unit</th></tr>
<tr><td rowspan="2">OU (Output Terminal)</td><td>57</td><td>Detection frequency</td><td>-</td><td rowspan="2">0.00–Max frq.</td><td>30.00</td><td rowspan="2">Hz</td></tr>
<tr><td>58</td><td>Detection frequency band</td><td>-</td><td>10.00</td></tr>
</table>
When the OU57, OU58 codes are set to 30 Hz and 10 Hz respectively, FDT-5 output is as shown in the graph.
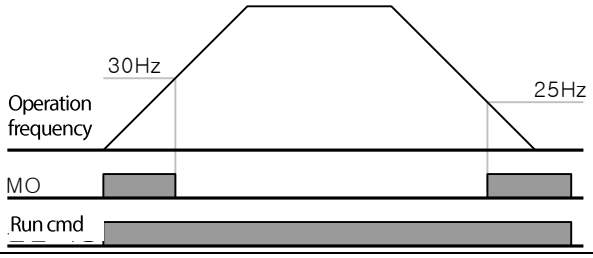
</td></tr>
<tr><td>5 : Overload (OL)</td><td>Refer to 7.1.2 Overload Early Warning and Trip on page 161.</td></tr>
<tr><td>6 : Inverter overload (IOL)</td><td>Refer to 7.2.3 Inverter Overload Protection on page 165.</td></tr>
<tr><td>7 : Motor stall (STALL)</td><td>Refer to 7.1.3 Stall Prevention on page 162.</td></tr>
<tr><td>8 : Over voltage trip (Ovt)</td><td>Outputs a signal when the DC voltage of the inverter’s main circuit rises above the rated voltage (410 Vdc).</td></tr>
<tr><td>9 : Low voltage trip (Lvt)</td><td>Outputs a signal when the DC voltage of the inverter’s main circuit drops under the rated voltage (initial value: 170 Vdc, determined by the bA19 setting) and a low voltage trip occurs.</td></tr>
<tr><td>10 : Inverter cooling pin overheat (OHt) (OHt)</td><td>Outputs a signal when the inverter cooling pin overheats.</td></tr>
</table>

OU31 (OU32) Parameter Setting	Description
11 : Lost command	Outputs a signal when there is a loss of analog input (V0, V1 ,I2[1)] input) terminal and RS-485 communication command.
12 : RUN	Outputs a signal when operation command is entered and the inverter outputs voltage. 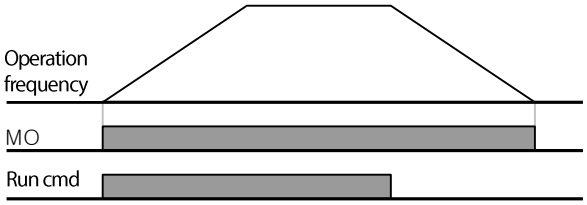
13: Stop	Outputs a signal when the inverter does not run.
14 : Steady	Outputs a signal in steady operation. 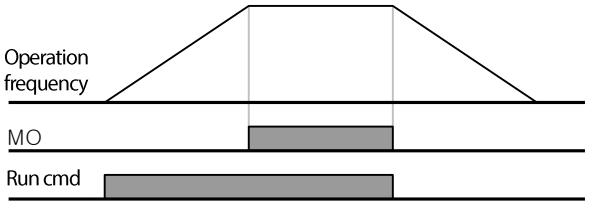
15 : Speed search	Refer to *6.9 Speed Search Operation* on page *127*.
16 : Ready	Outputs signal when the inverter is in stand by operation and ready to receive an external operation command.
17 : Trip output	Outputs a signal according to the OU30 code settings. Example) If the OU31 code is set to 17, and the OU30 code is set to 2, the multi-function relay operates when a trip (except a low voltage trip) occurs.
18 : Cooling fan abnormal warning	Outputs a signal when the Pr79 code is set to 0 (Continuous operation when cooling fan fault). Refer to *6.22 Operation Mode Setting When Cooling Fan is Abnormal* on page *150*.
19 : Brake control signal	Outputs a signal when the external brake signal is set. Refer to *6.18 Brake Control* on page *140*.

1) I2 input is available only for models equipped with advanced I/O.

6.21 Draw Operation

Group	Code	Name	Parameter Setting	Setting Range	Initial Setting	Unit
AP (Application)	70	Draw operation	-	0–4	0	-
	71	Draw ratio	-	0.0–100.0	0.0	%

Draw operation is a tension control. This feature allows a constant tension to be applied to the material that is drawn by a motor-driven device, by fine-tuning the motor speed using operation frequencies that are proportional to a ratio of the main frequency reference.

The ratio applied to the output frequency differs by the AP70 (Draw operation) parameter setting.

Code	Name	Parameter Setting	Function
AP70	Draw operation	0	No draw operation
		1	V1 (0–10 V) input draw operation
		2	V0 (0–5 V) input draw operation
		3	I2 (I) (0–20 mA) input draw operation[1)]
		4	I2 (V) (0–10 V) input draw operation[1)]

1) Available only for models equipped with advanced I/O.

Set the AP70 code to 1, 2, or 3.

If the input value is higher than the analog input's median value that is determined by the parameter settings of In08–11, In38–41, In53–56, and In58–61, the value is applied to the output frequency as a positive value, as much as the ratio set by AP71. If it is lower than the median value, it is applied as a negative value.

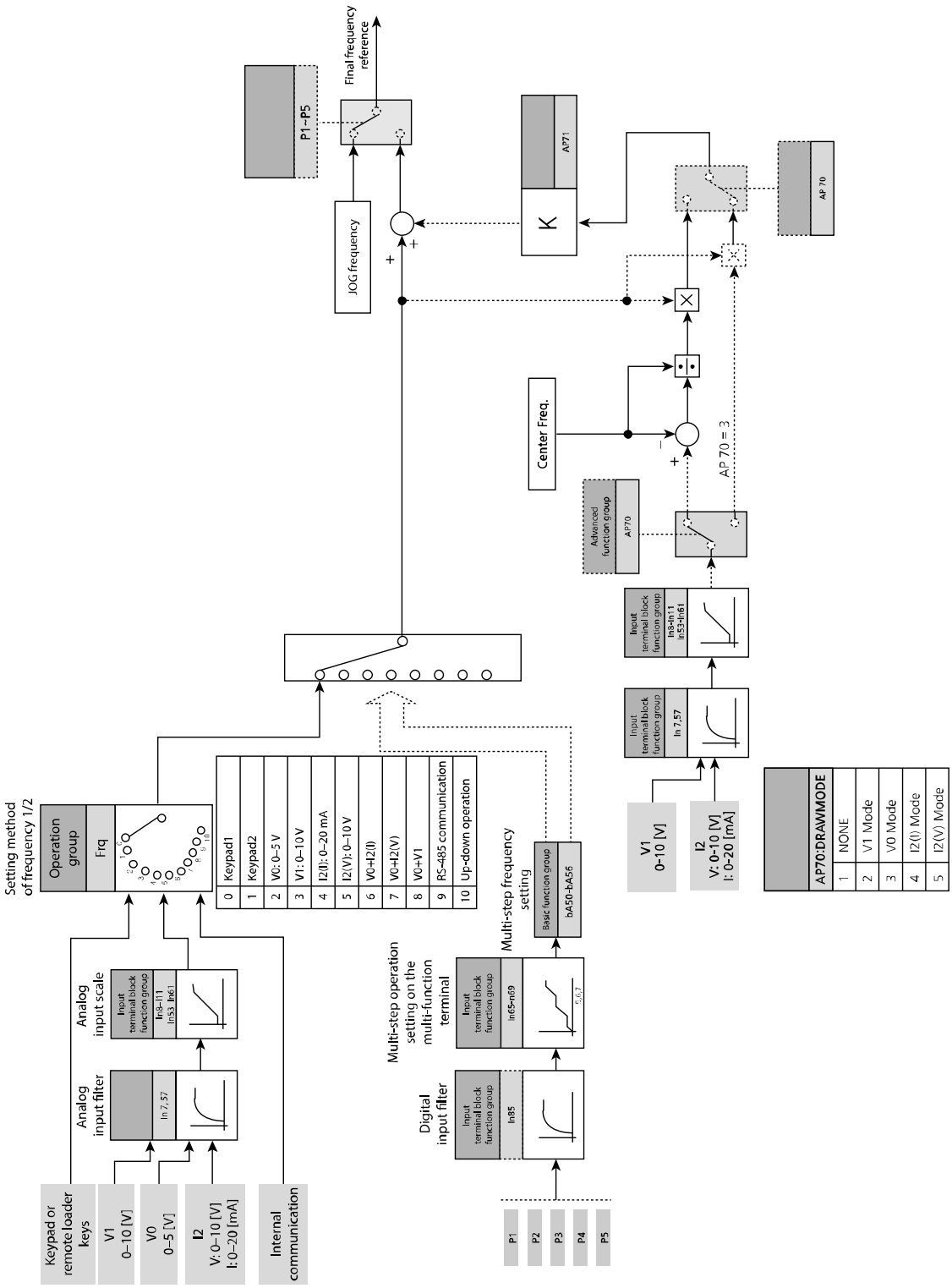
Setting method of frequency 1/2
Operation group
Frq
0 Keypad1
1 Keypad2
2 V0: 0~5 V
3 V1: 0~10 V
4 I2(I): 0~20 mA
5 I2(V): 0~10 V
6 V0+I2(I)
7 V0+I2(V)
8 V0+V1
9 RS-485 communication
10 Up-down operation
Keypad or remote loader keys
V1 0~10 [V]
V0 0~5 [V]
I2 V: 0~10 [V] I: 0~20 [mA]
Internal communication
Analog input filter
In 7, 57
Analog input scale
Input terminal block function group
In3~In11 In53~In61
Digital input filter
In85
Multi-step operation setting on the multi-function terminal
In65~In69
Multi-step frequency setting
Basic function group
bA50~bA56
P1
P2
P3
P4
P5
JOG frequency
P1~P5
Final frequency reference
K
AP71
Center Freq.
Advanced function group
AP70
AP 70 = 3
AP 70
V1 0~10 [V]
I2 V: 0~10 [V] I: 0~20 [mA]
AP70:DRAWMODE
1 NONE
2 V1 Mode
3 V0 Mode
4 I2(I) Mode
5 I2(V) Mode

Example of Draw Operation

When the set frequency is 30 Hz, AP70=1(V1: 0 –10 V), AP71=10.0%, and In07–In11 are set to the factory default settings, the frequency converted to the draw operation is 27 Hz (V1=0 V)–33 Hz (V1=10 V).

When the AP70 code is set to 1 (V1), the frequency is calculated by the following formula:

$$f'_{Ref} = f_{Ref} + \left\{ f_{ref} \times \frac{AP71}{100} \times \left(V_{in} - \frac{IN8 + IN10}{2} \right) \times \left(\frac{2}{IN10 - IN8} \right) \right\}$$

Caution

- Set the operation command at the Frq/bA05 codes and other frequencies at the AP70 code (Draw operation).
- For example, the draw operation is disabled if Frq=3 (V1) and AP70=1 (V1).

6.22 Operation Mode Setting When Cooling Fan is Abnormal

Group	Code	Name	Parameter Setting	Setting Range	Initial Setting	Unit
Pr (Protection)	79	Cooling fan fault operation selection	-	0–1	1	-
OU (Output Terminal)	31/ 32	Multi-function relay function selection/Multi-function output 2 function selection	18	0–19	17	-

Set the continuous operation or stop when a cooling fan fault occurs at the Pr79 code.

When the Pr79 code is set to 0 (Continuous operation when cooling fan fault), the warning signal is output at the OU31 code.

Parameter Setting	Description
Pr79 = 0	Sets continuous operation when a cooling fan fault occurs. The inverter does not stop and keeps operating. • A cooling fan fault signal can be output using the multi-function relay or multi-function output 2 terminal when the OU31 or OU32 code is set to 18 (Cooling fan warning signal). **Caution** If you keep operating the inverter when a cooling fan fault occurs, the inverter cooling pin overheats and the cooling pin overheat protection may activate. Also, the lifespan of important components inside the inverter may be shortened by the rise of the internal temperature. Operate the inverter after fixing the cooling fan fault.
Pr79 = 1	Set the operation to stop when a cooling fan fault occurs. • The keypad segment displays FAn and the inverter stops operation. • A cooling fan fault signal can be output when the OU31 or OU32 code is set to 17 (Trip output).

6.23 Operation State Monitor

Output Current

The inverter output current can be monitored by the CUr code in the Operation group.

Group	Code	Name	Parameter Setting	Setting Range	Initial Value	Unit
Operation	CUr	Output current	-	-	-	A

Motor RPM

The motor RPM can be monitored by the rPM code in the Operation group.

Group	Code	Name	Parameter Setting	Setting Range	Initial Value	Unit
Operation	rPM	Motor RPM	-	-	-	rpm
bA (Basic)	11	Number of motor poles	-	2–12	4	-
AP (Application)	01	PID control selection	-	0–1	0	-

Group	Code	Name	Parameter Setting	Setting Range	Initial Value	Unit
Ad (Advanced)	63	Motor RPM display gain	-	1–1,000	100	%

When the dr09 code is set to 0 (V/F control), the motor slip is not compensated and the inverter output frequency (f) is converted to rPM by the following formula:

$$rPM = \left(\frac{120 \times f}{bA11}\right) \times \frac{Ad63}{100\,\%}$$

When the AP01 code is set to 1 (PID control), the volume of feedback is displayed as a frequency.

bA11: Inputs the number of motor poles on the motor rating plate.

Ad63: Inputs the motor RPM display gain with the gear rate involved when the motor system RPM is monitored rather than the motor shaft RPM.

DC Voltage of the Inverter Main Circuit

Monitor the DC voltage of the inverter's main circuit at the dCL code in the Operation group.

Group	Code	Name	Parameter Setting	Setting Range	Initial Value	Unit
Operation	dCL	Inverter DC voltage	-	-	-	V

The voltage multiplied by $\sqrt{2}$ of the inverter input voltage is displayed when the motor does not run.

User Select Signal Code Options

You can monitor an option set by the dr81 code in the Drive group at vOL.

If output power, torque, analog V1 terminal input, or analog I2 terminal input[1)] are selected, the vOL code display changes to POr, tOr, v1M, or I2M[1)] respectively.

Group	Code	Name	Parameter Setting	Setting Range	Initial Value	Unit
Operation	vOL	User select signal	-	-	-	V
dr (Drive)	81	Monitor code selection	-	0 ~ 4	0	-

dr81: Set an option to display in the following table.

Code	Name	Parameter Setting	Function	Output

Code	Name	Parameter Setting	Function	Output
dr81	Monitor code selection	0	Output voltage [V]	vOL
		1	Output power [kW]	POr
		2	Torque [kgf · m]	tOr
		3	Analog V1 terminal input [V]	v1M
		4	Analog I2 terminal input [mA/V][1)]	I2M

1) Analog I2 terminal and I2M are available only for models equipped with advanced I/O. A current mode and voltage mode are switched by operating SW2, and the current is displayed up to 20 mA and the voltage up to 10 V when current is input.

For the display accuracy of torque, enter the motor efficiency on the motor rating plate at the bA15 code.

Range Selection At Power Input

An option set by the CF01 code in the Configuration group is displayed when power is input. When the parameters 12–15 are set, output current, motor RPM, DC voltage, and user select signal are displayed.

Group	Code	Name	Setting Range		Initial Value
CF (Configuration)	01	Select ranges at power input	0	Run frequency (0.00)	0
			1	Acceleration time (ACC)	
			2	Deceleration time (dEC)	
			3	Command source (drv)	
			4	Frequency reference source (Frq)	
			5	Motor selection (MkW)	
			6	Motor rated current (MrC)	
			7	Base frequency (MbF)	
			8	Maximum frequency (FrM)	
			9	Output voltage setting (IOv)	
			10	Forward torque boost (Ftb)	
			11	Reverse torque boost (rtb)	
			12	Output current (Cur)	
			13	Motor RPM (rPM)	
			14	Inverter DC voltage (dCL)	
			15	User select signal	
			16	Out of order signal (nOn)	
			17	Open hidden group (OGr)	

6.24 I/O Terminal Block State Monitor

Input Terminal Block State Monitor

Monitor a current ON or OFF state of the input terminal block by the In90 code in the Input Terminal group.

Group	Code	Name	Parameter Setting	Setting Range	Initial Value	Unit
In (Input Terminal)	90	Input monitor block state signal	-	000–111(Standard) 00000–11111(Advanced)	-	Bits

When the input terminal P1, P3, and P4 are ON, the keypad segment is displayed as the following:

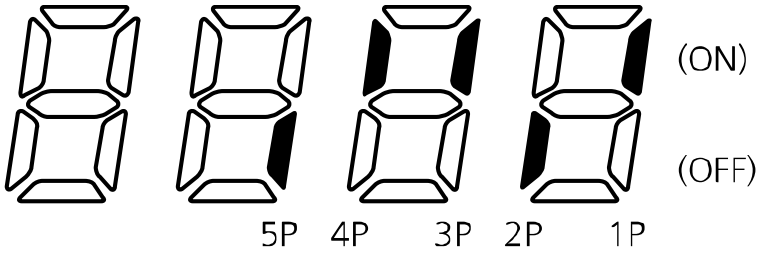

※ Only 1P–3P are available for models equipped with standard I/O.

Output Terminal Block State Monitor

Monitor a current ON or OFF state of the multi-function relay and the open collector output by the OU41 code in the Output Terminal group.

Group	Code	Name	Parameter Setting	Setting Range	Initial Value	Unit
OU (Output Terminal)	41	Output monitor block state signal	-	00–11	00	Bits

When the multi-function relay 1 is ON and the open collector output (standard I/O) is OFF, the keypad segment is displayed as the following:

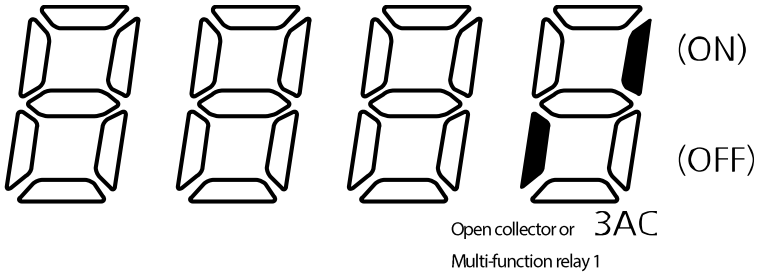

6.25 Fault State Monitor

Current Fault state Monitor

The nOn code in the Operation group displays a fault type when a trip occurs during the operation.

Group	Code	Name	Parameter Setting	Setting Range	Initial Value	Unit
Operation	nOn	Out of order signal	-	-	-	-

When a trip occurs, you can view the information for the fault type and the inverter operation state, fault type, frequency, current, and acceleration/deceleration information sequentially. Refer to *3 Learning to Perform Basic Operations* on page *39* for more information about how to use the keypad.

Item	Display Example	
Frequency	30.00	
Current	5.0	
Acceleration/Deceleration information	ACC	Trip occurred during acceleration
	dEC	Trip occurred during deceleration
	Std	Trip occurred at constant speed

Refer to *10.1 Trips* on page *217* for more information about trip types.

Fault History Monitor

Pr91–95: Saves information for up to 5 fault trips that occur during operation.

Pr96: Clears all information for the fault trips saved at the Pr91–95 codes.

Group	Code	Name	Parameter Setting	Setting Range	Initial Value	Unit
Pr (Protection)	91	Fault history 1	-	-	nOn	-
	~	~	~	~	~	~
	95	Fault history 5	-	-	nOn	-
	96	Fault history deletion	-	0–1	0	-

Information of the current fault trip can be monitored by the nOn code in the Operation group when a trip occurs during operation.

When you reset the inverter to clear the fault status by using the [STOP/RESET] key or a multi-function terminal block, the information displayed by the Operation group is moved to the Pr91 code. At this time, the previous fault information saved at the Pr91 code is moved to the Pr92 code automatically. Therefore, the most recent trip information is saved in the lowest fault history codes.

If multiple trips occur at the same time, the trip information is saved at a single code in a sequential order.

The following example details navigating to a different code after viewing a fault.

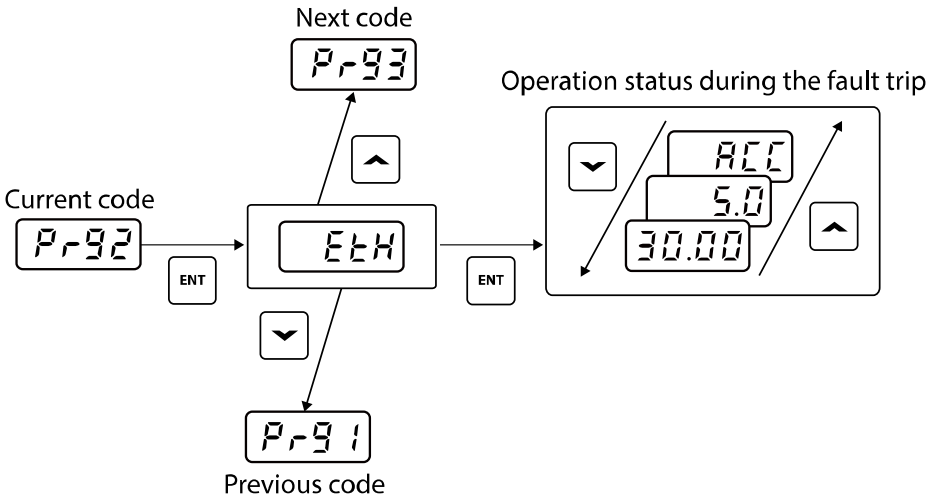

7 Learning Protection Features

7.1 Motor Protection

7.1.1 Electronic Thermal Motor Overheating Prevention (ETH)

Set the Pr40 code to 1.

This feature is to protect motor from overheating based on inverse time-limit thermal characteristics. The inverter output is blocked based on the ETH trip time in the figure below when the current exceeds the value set at the Pr42 code.

Group	Code	Name	Parameter Setting	Setting Range	Initial Value	Unit
Pr (Protection)	40	Electronic thermal selection	1	0–1	0	-
	42[1)]	Electronic thermal 1 minute level	-	Electronic thermal continuous operation level–200	150	%
	43[1)2)]	Electronic thermal continuous operation level	-	50–Electronic thermal 1 minute level	100	%
	41[1)]	Motor cooling style	-	0–1	0	-

1) Displayed only when Pr40 is set to 1.
2) The value cannot be set to 150% or more.

Pr42: Enter the motor's maximum current per minute based on the motor-rated current. The value cannot be set under the value set at Pr43.

Pr43: Enter the current to continuously operate the motor at. Generally, the value is the rated current that is specified on the motor's rating plate. The value cannot be set to the value set at Pr42, 150%, or more than the values.

Pr4: The cooling effect of general induction motors differs depending on the revolutions because cooler is attached to the motor's axis. But some motors, such as vector induction motors, supply separate power to the cooler to get a better cooling effect at low speeds.

Code	Name	Parameter Setting	Description
Pr41[1)]	Motor cooling style	0	General motor that cooler is attached to its axis
		1	Motor that supplies separate power to the cooler

1) Displayed only when Pr40 is set to 1.

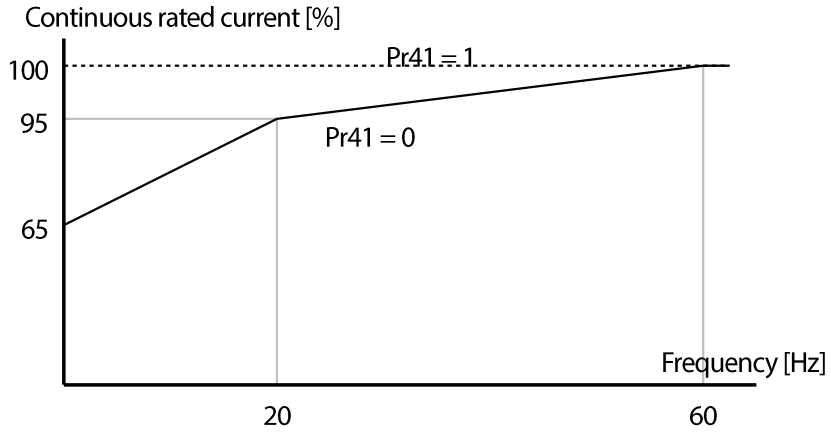

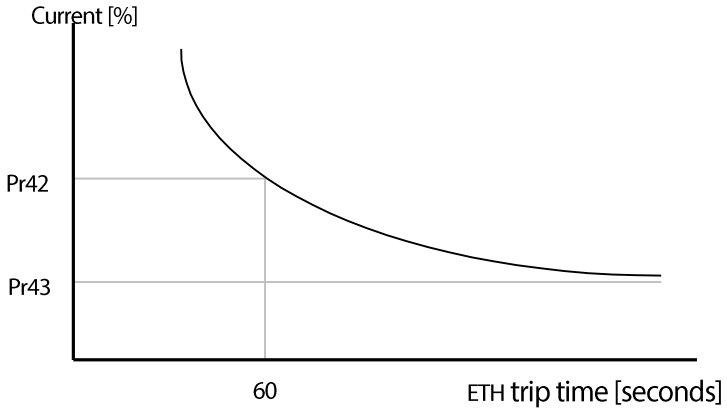

7.1.2 Overload Early Warning and Trip

Set the OU31 code in the Input/output group to 5. (Overload: OL)

Group	Code	Name	Parameter Setting	Setting Range	Initial Value	Unit
Pr (Protection)	18[1)]	Overload warning level	-	30–150	150	%
	19	Overload warning time	-	0.0–30.0	10.0	s
OU (Output Terminal)	31/ 32	Multi-function relay feature selection/ Multi-function output 2 feature selection	5	0–19	17	-

1) Set this value based on the motor-rated current (MrC).

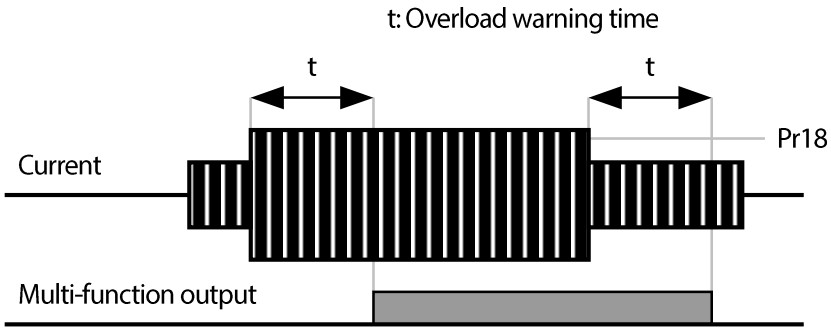

Overload trip

Group	Code	Name	Parameter Setting	Setting Range	Initial Value	Unit
Pr (Protection)	20	Overload trip selection	1	0–1	1	-
	21[1)]	Overload trip level	-	30–200	180	%
	22[1)]	Overload trip time	-	0.0–60.0	60.0	s

1) Displayed only when Pr20 (Overload warning selection) is set to 1.

Set the Pr20 code in the Protection (Pr) group to 1.

This feature is to block inverter output when the motor is overloaded.

The output is blocked when the current level exceeds the set value during the overload trip time.

When using the automatic restart function and the overload trip time is more than 30 seconds, the number of automatic restarts after a fault trip is initialized, even if the fault trip occurs 30 seconds after operation with a load that exceeds the overload trip level is started.

7.1.3 Stall Prevention

When accelerating: The motor decelerates when the current exceeds the value set at the Pr52 code.

When operating at a constant speed: The motor decelerates when the current exceeds the value set at the Pr52 code.

When decelerating: The motor stops decelerating when the voltage of the internal DC circuit increases to a certain level.

Pr52: Set this value based on the motor-rated current (MrC).

OU31/OU32: The motor stall status can be output to the connected external devices using the inverter's multi-function relay (3ABC). (The status is output whenever the motor is stalled, regardless of the stall prevention (Pr50) setting.

Group	Code	Name	Parameter Setting	Setting Range	Initial Value	Unit
Pr (Protection)	50	Stall prevention selection	-	000–111	000	Bit
	52	Stall prevention level	-	30–200	150	%
OU (Output Terminal)	31/ 32	Multi-function relay feature selection/ Multi-function output 2 feature selection	7	0–19	17	-

Pr50: Refer to the following table to configure the stall prevention setting.

Code	Name	bit	Settings
Pr50	Stall prevention selection	--1	Accelerating
		-1-	Operating at a constant speed
		1--	Decelerating

Example) Set the Pr50 code to 011 to use stall prevention during acceleration and operating at a constant speed.

When stall prevention is activated, the acceleration and deceleration times become longer than the set times because the motor decelerates during acceleration and stops decelerating during deceleration.

When using the t1 or t2 stall prevention settings during the steady operation, the motor accelerates and decelerates based on the acceleration time (ACC) and deceleration time (dEC) set at the operation group.

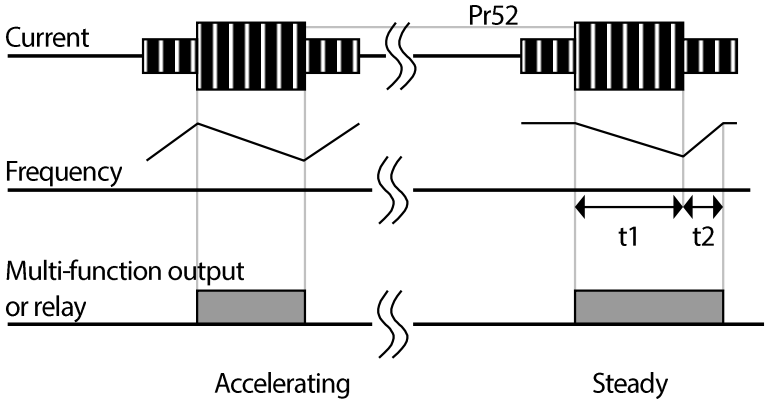

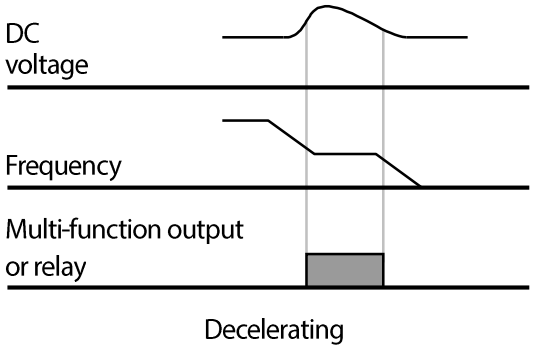

7.2 Inverter and Sequence Protection

7.2.1 Output Open-phase Protection

Set the Pr05 code in the protection (Pr) group to 1.

Output open-phase: The inverter output is blocked when one of the 3 phases (U, V, W) of inverter becomes an open phase.

Group	Code	Name	Parameter Setting	Setting Range	Initial Value	Unit
Pr (Protection)	05	Output open-phase protection selection	1	0–1	0	-

Caution

Set the motor-rated current (MrC) correctly. The output open-phase protection function may not operate if the MrC code value does not match the actual motor-rated current.

Code	Name	Parameter Setting	Description
Pr05	Output open-phase protection selection	0	Set not to use output open-phase protection selection
		1	Set to use output open-phase protection

7.2.2 External Trip Signal

Select a terminal to use as the external trip signal between the multi-function input terminals (standard I/O model: P1–P3, advanced I/O model: P1 – P5).

If you want to use P4 as the external trip signal for terminal A and P5 as external trip signal terminal B, set the In68 code to 18 and the In69 code to 19.

Group	Code	Name	Parameter Setting	Setting Range	Initial Value	Unit
In (Input Terminal)	65	Multi-function input terminal P1 function setting	-	0–27	0	-
	–	–	–		–	–
	68[1)]	Multi-function input terminal P4 function setting	18		3	-
	69[1)]	Multi-function input terminal P5 function setting	19		4	-

1) The In68 and In69 (multi-function input terminal P4–P5) codes are available only for models equipped with advanced I/O. When using models equipped with standard I/O, use In65–67 (multi-function input terminal P1–P3).

External trip signal input terminal A (N.O.): Maintains open status between the P4 and CM terminals for normal statuses and blocks output when a short circuit occurs.

External trip signal input terminal B (N.O.): Maintains short circuit status between the P5 and CM terminals for normal statuses and blocks output when the circuit is open.

(The trip by the external trip signal input terminal B (Etb) cannot be cleared if the P5 function is changed after the trip occurs. Short-circuit the P5 and CM to clear the trip first and change the function.)

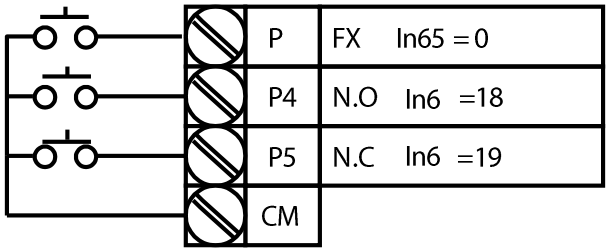

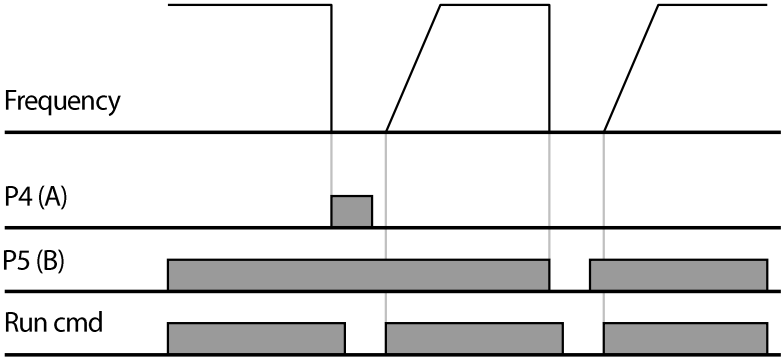

7.2.3 Inverter Overload Protection

Group	Code	Name	Parameter Setting	Setting Range	Initial Value	Unit
OU (Output Terminal)	31/ 32	Multi-function relay feature selection/ Multi-function output 2 feature selection	6	0–19	17	-

When the inverter input current exceeds the rated current, a protective function is activated to prevent damages to the inverter based on inverse proportional characteristics.

The multi-function relay (3ABC) signal can be output to the connected external devices when an inverter overload trip occurs.

7.2.4 Speed Command Loss

When setting operation speed using an analog input at the terminal block or communication options, speed command loss setting can be used to select the inverter operation for situations when the speed command is lost due to the disconnection of signal cables.

Group	Code	Name	Parameter Setting	Setting Range	Initial Value	Unit
Pr (Protection)	15	Time to determine analog speed command loss	0	0–2	0	-
	12	Motion at speed command loss	-	0–2	0	-
	13	Time to determine speed command loss	-	0.1–120.0	1.0	s
OU (Output Terminal)	31/ 32	Multi-function relay feature selection/ Multi-function output 2 feature selection	11	0–19	17	-

Pr15: Set time to determine analog speed command loss.

Code	Name	Parameter Setting	Description
Pr15	Time to determine analog speed command loss	0	Not operating
		1	When the input value is less than the half of the value set at the In 8, In38, and In53 codes
		2	When the input value is less than the value set at the In 8, In38, and In53 codes

Example 1) If the speed command is set to 3 (terminal block V1) at the Frq code in the operation group and Pr15 is set to 1, it is determined to be a speed command loss when the V1 input value is less than the half of the value set at In08.

Example 2) If the speed command is selected to 6 (advanced I/O only, terminal block V0+I2 (I)) at the Frq code in the operation group and Pr15 is set to 2, it is determined to be a speed command loss when the V0 input value is less than the value set at In38 or the input of the I2(I) terminal is less than the value set at In53.

Pr12: The inverter operates based on the Pr12 setting if conditions meet the Pr15 setting during the time set at Pr13.

Code	Name	Parameter Setting	Description
Pr12	Motion at speed command loss	0	Continue to run at frequency before the command loss
		1	Free run stop (output block)
		2	Deceleration stop

OU31 (or OU32): The information about the speed command loss can be output to connected external devices using the multi-function relay (3ABC) or multi-function output 2.

Example) When the Pr15 cod is set to 2, the Pr12 code is set to 2, the Pr13 code is set to 5.0 seconds, and the OU31 code is set to 11

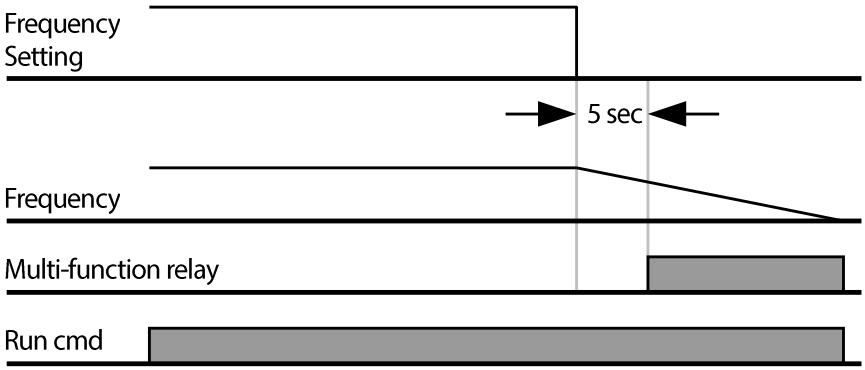

7.2.5 Dynamic Braking (DB) Resistor Configuration

Set the Pr65 code to 1.

Code	Name	Parameter Setting	Description
Pr65	DB resistor warning level setting	0	Use DB resistor without level limit
		1	Use DB resistor during the time set at Pr66

Set the level (%ED: Enable Duty) at Pr66.

Group	Code	Name	Parameter Setting	Setting Range	Initial Value	Unit
Pr (Protection)	65	DB resistor warning level setting	1	0–1	1	-
	66[1)]	DB resistor warning level	-	0–30	10	%

1) Displayed only when Pr65 (DB resistor warning level limit setting) is set to 1.

Caution

Do not set the braking resistor to exceed the resistor's power rating (Watt). If overloaded, it can overheat and cause a fire. When using a resistor with a heat sensor, the sensor output can be used as an external trip signal for the inverter's multi-function input.

Braking resistor configuration sets the rate at which the braking resistor operates for one operation cycle. The maximum time for continuous braking is 15 sec and the braking resistor signal is not output from the inverter after the 15 sec period has expired. An example of braking resistor set up is as follows:

Example 1) $$Pr66 = \frac{T_dec}{T_acc + T_steady + T_dec + T_stop} \times 100[\%]$$

T_acc: Acceleration time to set frequency
T_steady: Constant speed operation time at set frequency
T_dec: Deceleration time to a frequency lower than constant speed operation or the stop time from constant speed operation frequency
T_stop: Stop time until operation resumes

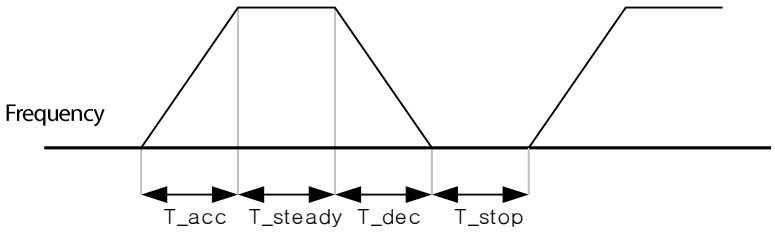

Example 2) $Pr66 = \frac{T_dec}{T_dec + T_steady1 + T_acc + T_steady2} \times 100[\%]$

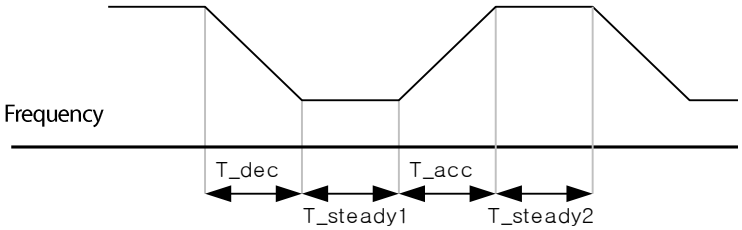

7.2.6 Initial charging circuit trip(ROT)

Set the Pr80 code to 1.

Code	Name	Parameter Setting	Description
Pr80	Initial charging circuit trip protection	0	Not use ROT function
		1	Use ROT function

Initial charging circuit : The initial charging circuit limits the inrush current when supplying power to the inverter, and it consists of a resistor and a relay.

Group	Code	Name	Parameter Setting	Setting Range	Initial Value	Unit
Pr (Protection)	80	Initial charging circuit trip protection	1	0 –1	1	bit

Caution

The initial charging circuit trip protection function can be used only when input power is 0.4–2.2 kW, and it does not protect trips due to a relay fusion.
This function activates and protects the inverter when the input power is unstable or an initial charging circuit trip occurs while supplying power to the inverter. If the ROT continues to occur after turning the power off and on again, stop using the inverter and contact the retailer or the LSIS customer service center.
(The inverter may become damaged if you operate the inverter in an initial charging circuit trip status.)

8 RS-485 Communication Features

This section in the user manual explains how to control the inverter with a PLC or a computer over a long distance using the RS-485 communicationfeatures. RS-485 communication features are available only for M100 models equipped with advanced I/O. To use the RS-485 communication features, connect the communication cables and set the communication parameters on the inverter. Refer to the communication protocols and parameters to configure and use the RS-485 communication features.

8.1 Communication Standards

Following the RS-485 communication standards, M100 products exchange data with a PLC and computer. The RS-485 communication standards support the Multi-drop Link System and offer an interface that is strongly resistant to noise. Please refer to the following table for details about the communication standards.

Item	Standard
Communication method/ Transmission type	RS-485/Bus type, Multi-drop Link System
Inverter type name	M100
Number of connected inverters/ Transmission distance	Maximum of 16 inverters / Maximum 1,200m (recommended distance: within 700m)
Recommended cable size	2 Pair Shielded Twisted Pair Cable (keep it a safe distance from the power cable.)
Installation type [1)]	RJ45 connector (pin 1: S+, pin 8: S-, pin 7: SG) on the I/O board
Power supply	Supplied by the inverter– an insulated power source from the inverter's power circuit
Communication speed	1,200/ 2,400/ 4,800/ 9,600/ 19,200/ 38,400 bps
Control procedure	Asynchronous communications system
Communication system	Half duplex system
Character system	Modbus-RTU: Binary / LS Bus: ASCII

Item	Standard
Stop bit length	1-bit/2-bit
Frame error check	2 bytes
Parity check	None/Even/Odd

1) Refer to the following when connecting the communication line:

- Use a 2-pair STP (Shielded Twisted Pair) cable (use only pin 1: S+, pin 8: S-, and pin 7: SG, pin 1 and pin 8 have to be twisted type) and RJ45 STP plug.
  For connections between inverters or extension cables, use an RJ45 coupler (Y-type LAN coupler that the STP plug can be attached to).
  Use cables, plugs, and couplers that conform to the LAN standard: CAT5, CAT5e, and CAT6.
- Maintain a safe distance between the communication line and the power cable.

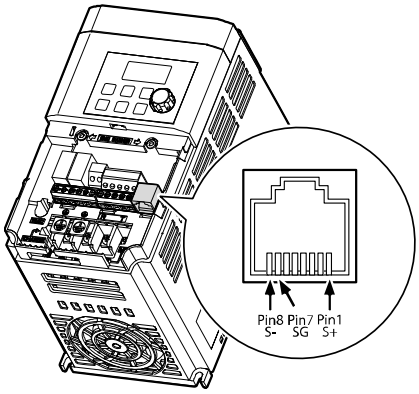

8.2 Communication System Configuration

In an RS-485 communication system, the PLC or computer is the master device and the inverter is the slave device. When using a computer as the master, the RS-232 converter must be integrated with the computer, so that it can communicate with the inverter through the RS-232/RS-485 converter. Specifications and performance of converters may vary depending on the manufacturer, but the basic functions are identical. Please refer to the converter manufacturer's user manual for details about features and specifications.

Connect the wires and configure the communication parameters on the inverter by referring to the following illustration of the communication system configuration.

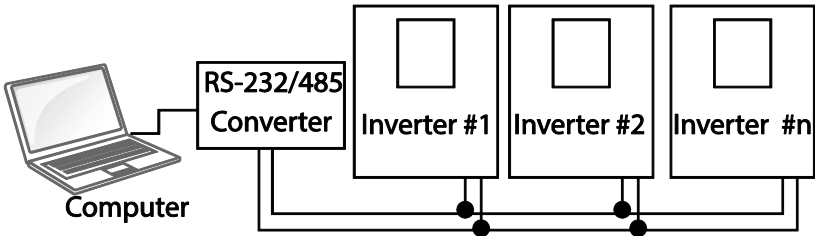

8.2.1 Communication Line Connection

Make sure that the inverter is turned off completely, and then connect the RS-485 communication line to the RJ45 connector (pin 1: S+, pin 8: S–, pin 7: SG) of the I/O board. The maximum number of inverters you can connect is 16. Use a shielded twisted pair cable for communication, and keep it a safe distance from the power cable during installation.

The maximum length of the communication line is 1,200 meters, but it is recommended to use no more than 700 meters of communication line to ensure stable communication. Please use a repeater to enhance the communication speed when using a communication line longer than 1,200 meters or when using a large number of devices. A repeater is effective when smooth communication is not available due to noise interference.

Caution

When wiring the communication line, make sure that the communication ground (SG) on the inverter and the PLC or computer are connected. SG terminals prevent communication errors due to electronic noise interference.

8.2.2 Setting Communication Parameters

Before proceeding with setting communication configurations, make sure that the communication lines are connected properly. Turn on the inverter and set the communication parameters.

Group	Code	Name	Parameter Setting		Setting Range	Unit
CM (Communication)[1]	01	Inverter station ID	1		1–250	-
	02	Communication protocol selection	0	ModBus RTU	0, 1	-
	03	Communication speed	3	9,600 bps	0–5	-
	04	Parity/stop bit setting	0	D8/PN/S1	0–3	-
	05	Communication time setting	5		2–100	msec

1) Available only for models equipped with advanced I/O.

Communication Parameters Setting Details

<table>
<tr><th>Code</th><th>Description</th></tr>
<tr><td>CM01</td><td>Set the inverter station ID between 1 and 250. Set the inverter station ID between 1 and 250.</td></tr>
<tr><td>CM02</td><td>Select one of the two built-in protocols: Modbus-RTU or LS INV 485.
<table>
<tr><th colspan="2">Setting</th><th>Function</th></tr>
<tr><td>0</td><td>Modbus-RTU</td><td>Modbus-RTU compatible protocol</td></tr>
<tr><td>1</td><td>LS INV 485</td><td>Dedicated protocol for the LS inverter</td></tr>
</table></td></tr>
<tr><td>CM03</td><td>Set a communication setting speed up to 115,200 bps.
<table>
<tr><th>Setting</th><th>Function</th></tr>
<tr><td>0</td><td>1,200 bps</td></tr>
<tr><td>1</td><td>2,400 bps</td></tr>
<tr><td>2</td><td>4,800 bps</td></tr>
<tr><td>3</td><td>9,600 bps</td></tr>
<tr><td>4</td><td>19,200 bps</td></tr>
<tr><td>5</td><td>38,400 bps</td></tr>
</table></td></tr>
<tr><td>CM04</td><td>Set a communication configuration. Set the data length, parity check method, and the number of stop bits.
<table>
<tr><th colspan="2">Setting</th><th>Function</th></tr>
<tr><td>0</td><td>D8/PN/S1</td><td>8-bit data / no parity check / 1 stop bit</td></tr>
<tr><td>1</td><td>D8/PN/S2</td><td>8-bit data / no parity check / 2 stop bit</td></tr>
<tr><td>2</td><td>D8/PE/S1</td><td>8-bit data / even parity / 1 stop bit</td></tr>
<tr><td>3</td><td>D8/PO/S1</td><td>8-bit data / odd parity / 1 stop bit</td></tr>
</table></td></tr>
<tr><td>CM05</td><td>Set the response time for the slave (inverter) to react to the request from the master. Response time is used in a system where the slave device response is too fast for the master device to process. Set this code to an appropriate value for smooth master-slave communication.
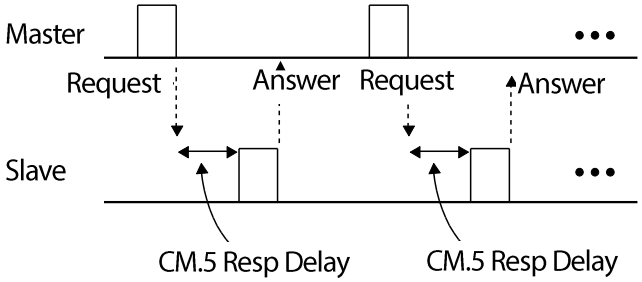
</td></tr>
</table>

8.2.3 Setting Operation Command and Frequency

To select the built-in RS485 communication as the source of command, set the Frq code to 9 (Int485) on the keypad (basic keypad with 7-segment display). On an LCD keypad, set the DRV code to 3 (Int485). Then, set common area parameters for the operation command and frequency via communication.

Group	Code	Name	Parameter Setting		Setting Range	Unit
Operation	drv	Command source	3	Int 485[1)]	0–3	-
	Frq	Frequency setting method	9	Int 485[1)]	0–10	-

1) Available only for models equipped with advanced I/O.

8.2.4 Command Loss Protective Operation

Configure the command loss decision standards and protective operations run when a communication problem lasts for a specified period of time.

Command Loss Protective Operation Setting Details

<table>
<tr><th>Code and Function</th><th>Description</th></tr>
<tr><td>Pr12 Motion at speed command loss,
Pr13 Time to determine speed command loss</td><td>Select the operation to run when a communication error has occurred and lasted exceeding the time set at Pr13.
<table>
<tr><th colspan="2">Pr12 Setting</th><th>Function</th></tr>
<tr><td>0</td><td>None</td><td>The speed command before the command loss immediately becomes the operation frequency without any protection function.</td></tr>
<tr><td>1</td><td>Free-Run</td><td>The inverter blocks output. The motor performs in free-run condition.</td></tr>
<tr><td>2</td><td>Dec</td><td>The motor decelerates and then stops.</td></tr>
</table></td></tr>
</table>

8.2.5 Parameter Group for Data Transmission

By defining a parameter group for data transmission, the communication addresses registered in the communication function group (CM) can be used in communication. Parameter group for data transmission may be defined to transmit multiple parameters at once, into the communication frame.

Group	Code	Name	Parameter Setting	Setting Range	Unit
CM (Communication)[1)]	31–38	Read address registration x	-	0000–A4FF	Hex
	51–58	Write address registration x	-	0000–A4FF	Hex

1) Available only for models equipped with advanced I/O.

Currently Registered CM Group Parameter

Address	Parameter	Assigned content by bit
0h0100–0h0107	Status Parameter-1–Status Parameter-8	Parameter communication code value registered at CM.31-38 (Read-only)
0h0108–0h010F	Control Parameter-1–Control Parameter-8	Parameter communication code value registered at CM.51-58 (Read/Write access)

8.3 Communication Protocol

The built-in RS-485 communication supports LS INV 485 and Modbus-RTU protocols.

8.3.1 LS INV 485 Protocol

The slave device (inverter) responds to read and write requests from the master device (PLC or PC).

Request

ENQ	Station ID	CMD	Data	SUM	EOT
1 byte	2 bytes	1 byte	n bytes	2 bytes	1 byte

Normal Response

ACK	Station ID	CMD	Data	SUM	EOT
1 byte	2 bytes	1 byte	n x 4 bytes	2 bytes	1 byte

Error Response

NAK	Station ID	CMD	Error code	SUM	EOT
1 byte	2 bytes	1 byte	2 bytes	2 bytes	1 byte

- A request starts with ENQ and ends with EOT.
- A normal response starts with ACK and ends with EOT.
- An error response starts with NAK and ends with EOT.
- A station ID indicates the inverter number and is displayed as a two-byte ASCII-HEX string that uses characters 0-9 and A-F.
- CMD: Uses uppercase characters (returns an IF error if lowercase characters are encountered)—please refer to the following table.

Character	ASCII-HEX	Command
‘R’	52h	Read
‘W’	57h	Write
‘X’	58h	Request monitor registration
‘Y’	59h	Perform monitor registration

- Data: ASCII-HEX (for example, when the data value is 3000: 3000 → ‘0”B”B”8’h → 30h 42h 42h 38h)• Data: ASCII-HEX (for example, when the data value is 3000: 3000 → ‘0”B”B”8’h → 30h 42h 42h 38h)
- Error code: ASCII-HEX
- Transmission/reception buffer size: Transmission=39 bytes, Reception=44 bytes
- Monitor registration buffer: 8 Words
- SUM: Checks communication errors via sum.
  SUM=a total of the lower 8 bits values for station ID, command and data (Station ID+CMD+Data) in ASCII-HEX.

  For example, a command to read 1 address from address 3000:
  SUM=‘0’+‘1’+’R’+‘3’+‘0’+‘0’+‘0’+’1’ = 30h+31h+52h+33h+30h+30h+30h+31h = 1A7h (the control value is not included: ENQ, ACK, NAK, etc.).

ENQ	Station ID	CMD	Address	Number of Addresses	SUM	EOT
05h	‘01’	‘R’	‘3000’	‘1’	‘A7’	04h
1 byte	2 bytes	1 byte	4 bytes	1 byte	2 bytes	1 byte

Note

Broadcasting
Broadcasting sends commands to all inverters connected to the network simultaneously. When commands are sent from station ID 255, each inverter acts on the command regardless of the station ID. However no response is issued for commands transmitted by broadcasting.

8.3.1.1 Detailed Read Protocol

Read Request: Reads successive n words from address XXXX.

ENQ	Station ID	CMD	Address	Number of Addresses	SUM	EOT
05h	‘01’–’FA’	‘R’	‘XXXX‘	‘1’–‘8’ = n	‘XX’	04h
1 byte	2 bytes	1 byte	4 bytes	1 byte	2 bytes	1 byte

Total bytes=12. Characters are displayed inside single quotation marks (‘).

Read Normal Response

ACK	Station ID	CMD	Data	SUM	EOT
06h	‘01’–’FA’	‘R’	‘XXXX‘	‘XX’	04h
1 byte	2 bytes	1 byte	n x 4 bytes	2 bytes	1 byte

Total bytes= (7 x n x 4): a maximum of 39

Read Error Response

NAK	Station ID	CMD	Error code	SUM	EOT
15h	‘01’–’FA’	‘R’	‘**’	‘XX’	04h
1 byte	2 bytes	1 byte	2 bytes	2 bytes	1 byte

Total bytes=9

8.3.1.2 Detailed Write Protocol

Write Request

ENQ	Station ID	CMD	Address	Number of Addresses	Data	SUM	EOT
05h	‘01’–’FA’	‘W’	‘XXXX‘	‘1’–‘8’ = n	‘XXXX…’	‘XX’	04h
1 byte	2 bytes	1 byte	4 bytes	1 byte	n x 4 bytes	2 bytes	1 byte

Total bytes= (12 x n x 4): a maximum of 44

Write Normal Response

ACK	Station ID	CMD	Data	SUM	EOT
06h	‘01’–’FA’	‘W’	‘XXXX…’	‘XX’	04h
1 byte	2 bytes	1 byte	n x 4 bytes	2 bytes	1 byte

Total bytes= (7 x n x 4): a maximum of 39

Write Error Response

NAK	Station ID	CMD	Error code	SUM	EOT
15h	‘01’–’FA’	‘W’	‘**’	‘XX’	04h
1 byte	2 bytes	1 byte	2 bytes	2 bytes	1 byte

Total bytes=9

Note

Operation command and command frequency return the past data when answering the first write request, and return their own data when answering the second write request.

8.3.1.3 Monitor Registration Detailed Protocol

Monitor registration request is made to designate the type of data that requires continuous monitoring and periodic updating.

Monitor Registration Request: Registration requests for n addresses (where n refers to the number of addresses. The addresses do not have to be contiguous.)

ENQ	Station ID	CMD	Number of Addresses	Address	SUM	EOT
05h	'01'–'FA'	'X'	'1'–'8'=n	'XXXX…'	'XX'	04h
1 byte	2 bytes	1 byte	1 byte	n x 4 bytes	2 bytes	1 byte

Total bytes= (8 x n x 4): a maximum of 40

Monitor Registration Normal Response

ACK	Station ID	CMD	SUM	EOT
06h	'01'–'FA'	'X'	'XX'	04h
1 byte	2 bytes	1 byte	2 bytes	1 byte

Total bytes=7

Monitor Registration Error Response

NAK	Station ID	CMD	Error code	SUM	EOT
15h	'01'–'FA'	'X'	'**'	'XX'	04h
1 byte	2 bytes	1 byte	2 bytes	2 bytes	1 byte

Total bytes=9

Monitor Registration Perform Request: A data read request for a registered address, received from a monitor registration request

ENQ	Station ID	CMD	SUM	EOT
05h	'01'–'FA'	'Y'	'XX'	04h
1 byte	2 bytes	1 byte	2 bytes	1 byte

Total bytes=7

Monitor Registration Execution Normal Response

ACK	Station ID	CMD	Data	SUM	EOT
06h	'01'–'FA'	'Y'	'XXXX…'	'XX'	04h
1 byte	2 bytes	1 byte	n x 4 bytes	2 bytes	1 byte

Total bytes= (7 x n x 4): a maximum of 39

Monitor Registration Execution Error Response

NAK	Station ID	CMD	Error code	SUM	EOT
15h	'01'–'FA'	'Y'	'**'	'XX'	04h
1 byte	2 bytes	1 byte	2 bytes	2 bytes	1 byte

Total bytes=9

8.3.1.4 Error code

Item	Abbreviation	Description
ILLEGAL FUNCTION	IF	The requested function cannot be performed by a slave because the corresponding function does not exist.
ILLEGAL DATA ADDRESS	IA	The received parameter address is invalid at the slave.
ILLEGAL DATA VALUE	ID	The received parameter data is invalid at the slave.
WRITE MODE ERROR	WM	Tried writing (W) to a parameter that does not allow writing (read-only parameters, or when writing is prohibited during operation)
FRAME ERROR	FE	The frame size does not match.

8.3.1.5 ASCII Code

Character	Hex	Character	Hex	Character	Hex
A	41	q	71	@	40
B	42	r	72	[	5B
C	43	s	73	\	5C
D	44	t	74	]	5D
E	45	u	75		5E
F	46	v	76		5F
G	47	w	77		60
H	48	x	78	{	7B
I	49	y	79	|	7C
J	4A	z	7A	}	7D
K	4B	0	30	~	7E
L	4C	1	31	BEL	07
M	4D	2	32	BS	08
N	4E	3	33	CAN	18
O	4F	4	34	CR	0D
P	50	5	35	DC1	11
Q	51	6	36	DC2	12
R	52	7	37	DC3	13
S	53	8	38	DC4	14
T	54	9	39	DEL	7F
U	55	space	20	DLE	10
V	56	!	21	EM	19
W	57	"	22	ACK	06
X	58	#	23	ENQ	05
Y	59	$	24	EOT	04
Z	5A	%	25	ESC	1B
a	61	&	26	ETB	17
b	62	'	27	ETX	03
c	63	(	28	FF	0C
d	64	)	29	FS	1C
e	65	*	2A	GS	1D
f	66	+	2B	HT	09
g	67	,	2C	LF	0A
h	68	-	2D	NAK	15
i	69	.	2E	NUL	00
j	6A	/	2F	RS	1E
k	6B	:	3A	S1	0F
l	6C	;	3B	SO	0E
m	6D	<	3C	SOH	01
n	6E	=	3D	STX	02
o	6F	>	3E	SUB	1A
p	70	?	3F	SYN	16
				US	1F
				VT	0B

8.3.2 Modbus-RTU Protocol

8.3.2.1 Function Code and Protocol (unit: byte)

In the following section, station ID is the value set at CM01 (Int485 St ID), and starting address is the communication address (starting address size is in bytes). For more information about communication addresses, refer to *8.4 Compatible Common Area Parameter* on page *186*.

Function Code #03: Read Holding Register

Query Field Name
Station ID
Function(0x03)
Starting Address Hi
Starting Address Lo
# of Points Hi
# of Points Lo
CRC Lo
CRC Hi

Response Field Name	
Station ID	
Function(0x03)	
Byte Count	
Data Hi	# number of Points
Data Lo	
…	
…	
Data Hi	
Data Lo	
CRC Lo	
CRC Hi	

Function Code #04: Read Input Register

Query Field Name
Station ID
Function(0x04)
Starting Address Hi
Starting Address Lo
# of Points Hi
# of Points Lo
CRC Lo
CRC Hi

Response Field Name	
Station ID	
Function(0x04)	
Byte Count	
Data Hi	# number of Points
Data Lo	
…	
…	
Data Hi	
Data Lo	
CRC Lo	
CRC Hi	

Function Code #06: Preset Single Register

Query Field Name
Station ID
Function(0x06)
Starting Address Hi
Register Address Lo
Preset Data Hi
Preset Data Lo
CRC Lo
CRC Hi

Response Field Name
Station ID
Function(0x06)
Register Address Hi
Register Address Lo
Preset Data Hi
Preset Data Lo
CRC Lo
CRC Hi

Function Code #16 (hex 0h10): Preset Multiple Register

Query Field Name
Station ID
Function(0x10)
Starting Address Hi
Starting Address Lo
# of Register Hi
# of Register Lo
Byte Count
Data Hi
Data Lo
…
…
Data Hi
Data Lo
CRC Lo
CRC Hi

number of Points

Response Field Name
Station ID
Function(0x10)
Starting Address Hi
Starting Address Lo
# of Register Hi
# of Register Lo
CRC Lo
CRC Hi

Exception Code

Code
01: ILLEGAL FUNCTION
02: ILLEGAL DATA ADRESS
03: ILLEGAL DATA VALUE
06: SLAVE DEVICE BUSY

Response

Field Name
Station ID
Function[1)]
Exception Code
CRC Lo
CRC Hi

1) The function value uses the top level bit for all query values.

Example of Modbus-RTU Communication in Use

When the Acc time (Communication address 0x1103) is changed to 5.0 sec and the Dec time (Communication address 0x1104) is changed to 10.0 sec.

Frame Transmission from Master to Slave (Request)

Item	Station ID	Function	Starting Address	# of Register	Byte Count	Data 1	Data 2	CRC
Hex	0x01	0x10	0x1102	0x0002	0x04	0x0032	0x0064	0x1202
Description	CM 1 Int485 St ID	Preset Multiple Register	Starting Address -1 (0x1103-1)	-	-	50 (ACC time 5.0sec)	100 (DEC time 10.0sec)	-

Frame Transmission from Slave to Master (Response)

Item	Station ID	Function	Starting Address	# of Register	CRC
Hex	0x01	0x10	0x1102	0x0002	0xE534
Description	CM 1 Int485 St ID	Preset Multiple Register	Starting Address -1 (0x1103-1)	-	-

8.4 Compatible Common Area Parameter

The following are common area parameters compatible with iS5, iP5A, iV5, iG5A, S100, and C100.

Address	Parameter	Scale	Unit	R/W	Assigned Content by Bit					
0x0000	Inverter model			R	E: LSLV-M100					
0x0001	Inverter capacity			R	0000: 0.1kW-1	0001: 0.2kW-1	0002: 0.4kW-1			
					0003: 0.8kW-1	0004: 1.5kW-1	0005: 2.2kW-1			
					000A: 1.5kW-2	000B: 2.2kW-2	000C: 3.7kW-2			
					000F: 0.4kW-4	0010: 0.8kW-4	0011: 1.5kW-4			
					0012: 2.2kW-4	0013: 3.7kW-4				
0x0002	Inverter input voltage			R	0: 220V-1 phase, 1: 220V-3 phase, 2: 440V-3 phase					
0x0003	Version			R	Example 0x0010: Version 1.01					
0x0004	Parameter setting			R/W	0 : Prohibit communication settings, 1 : Allow communication settings					
0x0005	Command Frequency	0.01	Hz	R/W	Start frequency - Maximum frequency					
0x0006	Operation command (Advanced)			R	B15, B14, B13: Reserved					
					B12, B11, B10, B9, B8: Frequency command information 0: Keypad-1, Keypad-2 1: Reserved 2: Multi-step speed 1 3: Multi-step speed 2 4: Multi-step speed 3 5: Multi-step speed 4 6: Multi-step speed 5 7: Multi-step speed 6 8: Multi-step speed 7 9: Up 10: Down 11: Up/down zero 12: V0 13: V1 14: I2(I) 15: I2(V) 16: V0+I2(I) 17: V0+I2(V) 18: V0+I2(V) 19: Communication operation					
					B7, B6 : Operation command information 0: Terminal block 1: Keypad 3: Communication					
				R/W	B5	Reserved	B4	Emergency stop	B3	Fault reset
					B2	Reverse operation	B1	Forward operation	B0	Stop
0x0007	Acceleration time	0.1	sec	R/W	Refer to the table of functions					
0x0008	Deceleration time	0.1	sec	R/W	Refer to the table of functions					

Address	Parameter	Scale	Unit	R/W	Assigned Content by Bit					
0x0009	Current	0.1	A	R	Refer to the table of functions					
0x000A	Output frequency	0.01	Hz	R	Refer to the table of functions					
0x000B	Output voltage	1	V	R	Refer to the table of functions					
0x000C	DC Link voltage	1	V	R	Refer to the table of functions					
0x000D	Output power	0.1	kW	R	Refer to the table of functions					
0x000E	Operation status			R	B15	Reserved	B14	Reserved		
					B13	Reserved	B12	Reverse command		
					B11	Forward command	B10	Brake release signal		
					B9	Reserved	B8	Drive stopped.		
					B7	DC Braking	B6	Speed reached		
					B5	Decelerating	B4	Accelerating		
					B3	Fault Trip	B2	Operating in reverse direction		
					B1	Operating in forward direction	B0	Stopped		
0x000F	Fault trip information-A			R	B15	LVT	B14	IOLT	B13	POT
					B12	FAN	B11	EEP	B10	EXT-B
					B9	Reserved	B8	OLT	B7	ETH
					B6	OHT	B5	GFT	B4	COL
					B3	ETX(BX)	B2	EXT-A	B1	OVT
					B0	Reserved				
0x0010	Input terminal information			R	B15–B5: Reserved					
					B4	P5	B3	P4	B2	P3
					B1	P2	B0	P1		
0x0011	Output terminal information			R	B4	3ABC				
					Others	Reserved				
0x0012	V1			R	The value corresponds to the 0–10 V input (0x0000–0x03FF)					
0x0013	V2			R	0–5V KPD Volume (0x0000–0x03FF)					
0x0014	I			R	The value corresponds to the 0–20 mA input (0x0000–0x03FF)					
0x0015	RPM			R	Refer to the table of functions					
0x001A	Unit display			R	Not Used					

Address	Parameter	Scale	Unit	R/W	Assigned Content by Bit					
0x001B	Number of poles			R	Not Used					
0x001C	Custom Version			R	Not Used					
0x001D	Fault trip information-B			R	B9	ROT	B7	Reserved	B6	Reserved
					B5	NBR	B4	OCT	B3	REEP
					B2	NTC	B1	Reserved	B0	COM
0x001E	PID Feedback			R/W	When Feedback is set to communication in PID operation, the amount of feedback is written and read in 0.1% increments.					
0x0100–0x0107	Read address registration			R	0h0100 : CM-31 0h0102 : CM-33 0h0104 : CM-35 0h0106 : CM-37	0h0101 : CM-32 0h0103 : CM-34 0h0105 : CM-36 0h0107 : CM-38				
0x0108–0x010F:	Write address registration			W	0h0108 : CM-51 0h010A : CM-53 0h010C : CM-55 0h010E : CM-57	0h0109 : CM-52 0h010B : CM-54 0h010D : CM-56 0h010F : CM-58				

Note

1 Data cannot be saved when editing data via the common area parameter.

- The data change is reflected temporarily, but the value will return to the previously set value when resetting or turning off and on the inverter.
- When editing data via each group parameter other than the common area parameter, the data change will be maintained even after resetting or turning off and on the inverter.

2 The software version in the common area is displayed in hexadecimal numbers, and the software version in the parameter area is displayed in decimal numbers.

3 The 0x001E PID Feedback parameter in the common area can be written and read in 0.1% increments regardless of the AP2 PID unit setting parameter, and the amount of feedback that can be reflected or read is as follows:

- When the maximum frequency is 60.00 Hz and writing 0x0032 (5.0%) to 0x001E: 60.00Hz x 5.0% = 3.00Hz

9 Table of Functions

9.1 Operation Group

Display	Comm. Address	Name	Setting Range		Initial Value	Property*	Page
0.00	0h1F00	Command frequency	0.00–Maximum frequency [Hz]		0.00	O	p.67, p.78
ACC	0h1F01	Acceleration time	0.0–6000.0 [s]1)		5.0	O	p.65, p.86, p.95
dEC	0h1F02	Deceleration time			10.0	O	
drv	0h1F03	Command source	0	Keypad	1	X	p.52, p.64, p.80, p.132, p.175
			1	Fx/Rx-1			
			2	Fx/Rx-2			
			3	RS-485 communication 2)			
Frq	0h1F04	Frequency Setting method	0	Keypad 1	0	X	p.48, p.52, p67, p.110, p.112, p.116, p.117, p.132, p.175
			1	Keypad 2			
			2	V0: 0–5 [V]			
			3	V1: 0–10 [V]			
			4	I2(I): 0–20 [mA] 2)			
			5	I2(V): 0–10 [V] 2)			
			6	V0 + I2 (I) 2)			
			7	V0 + I2 (V) 2)			
			8	V0 + V1			
			9	RS-485 communication 2)			
			10	Up-down operation			

1) The setting range varies depending on the set value of the bA 8 code.
2) Available only for models equipped with advanced I/O.
* Settings can be changed during the inverter operation.

Display	Comm. Address	Name	Setting Range	Initial Value	Property*	Page
MkW	0h1F05	Motor selection	0.1 — 0.1kW 0.2 — 0.2 kW 0.4 — 0.4 kW 0.75 — 0.75 kW 1.1 — 1.1 kW 1.5 — 1.5 kW 2.2 — 2.2 kW	-	X	p.119
MrC[3]	0h1F06	Rated motor current	0.1–150.0 [A]	-	X	p.119
MbF	0h1F07	Base frequency	30.00–400.00 [Hz]	60.00	X	p.65, p.95
FrM	0h1F08	Maximum frequency	40.00–400.00 [Hz]	60.00	X	p.65, p.102
IOv	0h1F09	Output voltage setting	0, 170~264 [V]	0	X	p.65, p.97
Ftb	0h1F0A	Forward boost	0.0–20.0 [%]	4.0	X	p.65, p.98
rtb	0h1F0B	Reverse boost	0.0–20.0 [%]	4.0	X	
CUr	0h1F0C	Output current	-	-	-	p.57, p.151
rPM	0h1F0D	Motor RPM	-	-	-	p.151
dCL	0h1F0E	Inverter DC voltage	-	-	-	p.154
vOL, POr, tOr, v1M, I2M[4]	-	User select signal	vOL — Output voltage POr — Output power tOr — Output torque v1M — Analog V1 terminal input I2M — Analog I2 terminal input	vOL	-	p.151
nOn	0h1F10	Currently out of order	-	-	-	p.156
OGr	0h1F11	Open hidden groups	0 — Hide groups except for operation group 1 — Enable all groups			p.43

3) The initial value varies depending on the motor capacity setting (MkW) and the value is set based on the 220/440 HIGEN motor when shipping.

4) Display information can be selected at dr81 (Monitor item setting).

* Settings can be changed during the inverter operation.

9.2 Drive Group (PAR → dr)

Display	Comm. Address	Name	Setting Range		Initial Value	Property*	Page
00	x	Jump Code	0–81		9	O	p.46
09	0h1109	Control mode	0	V/F schedule control	1	X	p. 95 p.119, p.148
			1	Slip compensation control			
11	0h110B	Jog frequency	0.00–Maximum frequency [Hz]		10.00	O	p.110
15	0h110F	Torque boost	0	Manual torque boost	0	X	p.65, p.98, p.100
			1	Automatic torque boost			
19	0h1113	Starting frequency	0.10–10.00 [Hz]		0.50	X	p.65, p.95, p.102
20[1)]	0h1114	Select rotation direction	F	Forward run	F	O	p.80
			r	Reverse run			
26[2)]	0h111A	Automatic torque boost filter gain	1–1000		2	O	p.100
27[2)]	0h111B	Automatic torque boost motoring gain	0.0–300.0 [%]		120.0	O	
28[2)]	0h111C	Automatic torque boost regeneration gain	0.0–300.0 [%]		120.0	O	
81	0h1151	Select Monitor code	0	Output voltage (vOL) [V]	0	O	p.151
			1	Output power (POr) [kW]			
			2	Torque (tOr) [kgf · m]			
			3	Analog V1 terminal input (v1M) [V]			
			4	Analog I2 terminal input (I2M) [mA/V] [3)]			

1) The rotation direction command by the dr20 setting is applied only when drv(Command source) is set to 0. You can still display and set the dr20 setting when drv(Command source) is set to other than 0.

2) Enable only when dr15 (Torque boost) is set to 1.

3) Available only for models equipped with advanced I/O. The current and the voltage are displayed up to 20 mA and 10 V depending on the SW2 operation.

* Settings can be changed during the inverter operation.

Display	Comm. Address	Name	Setting Range		Initial Value	Property*	Page
85[4)]	x	Read Parameters	0	No	0	X	p.245

Display	Comm. Address	Name	Setting Range		Initial Value	Property*	Page
			1	Yes			
86[4]	x	Write Parameters	0	No	0	X	p.245
			1	Yes			
91[5]	0h115B	Smart Copier	0	None	0	X	-
			1	Reserved			
			2	Reserved			
			3	SmartUpLoad			

4) Displayed only when the remote keypad connect to the inverter.
5) Refer to Smart Copier User's Manual separately.
* Settings can be changed during the inverter operation.

9.3 Basic Function group (PAR→bA)

Display	Comm. Address	Name	Setting Range		Initial Value	Property*	Page
00	x	Jump Code	0–83		19	O	p.46
04[1]	0h1204	Command source 2	0	Keypad	1	X	p.46, p.132
			1	Fx/Rx-1			
			2	Fx/Rx-2			
			3	RS-485 communication[2]			
05[1]	0h1205	Frequency source 2	0	Keypad 1	0	X	
			1	Keypad 2			
			2	V0: 0–5 [V]			
			3	V1: 0–10 [V]			
			4	I2(I): 0–20 [mA][2]			
			5	I2(V): 0–10 [V][2]			
			6	Volume +I2 (I)[2]			
			7	Volume + I2 (V)[2]			
			8	Volume + V1			
			9	RS-485 communication[2]			
			10	Up-down operation			
07	0h1207	V/F pattern	0	Linear	0	X	p.65, p.95
			1	Square reduction			
			2	4.13.3 User V/F			

1) Displayed only when one of the In65–69 (Multi-function input terminal function setting) is set to 22.
2) Available only for models equipped with advanced I/O.
* Settings can be changed during the inverter operation.

Display	Comm. Address	Name	Setting Range	Initial Value	Property*	Page
08	0h1208	Unit of acc/dec time setting	bA08 setting: Acc/dec time setting range 0 (0.01 sec): 0.01 .600–20.00 sec 1 (0.1 sec): 0.1–6000.0 sec 2 (1 sec): 1–60000 sec	1	O	p.86
09	0h1209	Acc/dec frequency reference	0: Maximum frequency (FrM) 1: Delta frequency	0	X	p.65, p.86
11	0h120B	Number of motor poles	2–12 [pole]	4	X	p.119, p.151
12[3)]	0h120C	Rated motor slip current	0.00–10.00 [Hz]	-	X	p.119
14[3)]	0h120E	Motor no-load current	0.1–100.0 [A]	-	X	
15[3)]	0h120F	Motor efficiency	50–100[%]	-	X	
16	0h1210	Load inertia rate	0: Less than 10 times motor inertia 1: 10 times motor inertia 2: More than 10 times motor inertia	0	X	p.107, p.119
19	0h1213	Input voltage adjustment	170–240 [V]	220	O	p.135
25	0h1219	Slip gain	0.0–150.0 [%]	100.0	O	-

3) The initial value varies depending on the motor capacity setting (MkW) and the value is set based on the 220/440 HIGEN motor when shipping.

* Settings can be changed during the inverter operation.

Display	Comm. Address	Name	Setting Range	Initial Value	Property*	Page
41[4)]	0h1229	User V/F frequency 1	0.00–Maximum frequency [Hz]	15.00	X	p.65, p.95
42[4)]	0h122A	User V/F voltage 1	0–100 [%]	25	X	
43[4)]	0h122B	User V/F frequency 2	0.00–Maximum frequency [Hz]	30.00	X	
44[4)]	0h122C	User V/F voltage 2	0–100 [%]	50	X	
45[4)]	0h122D	User V/F frequency 3	0.00–Maximum frequency [Hz]	45.00	X	
46[4)]	0h122E	User V/F voltage 3	0–100 [%]	75	X	
47[4)]	0h122F	User V/F frequency 4	0.00–Maximum frequency [Hz]	60.00	X	
48[4)]	0h1230	User V/F voltage 4	0–100 [%]	100	X	
50	0h1232	Multi-step frequency 1	0.00–Maximum frequency [Hz]	10.00	O	p.65, p.78, p.88
51	0h1233	Multi-step frequency 2		20.00	O	
52	0h1234	Multi-step frequency 3		30.00	O	
53	0h1235	Multi-step frequency 4		30.00	O	
54	0h1236	Multi-step frequency 5		25.00	O	
55	0h1237	Multi-step frequency 6		20.00	O	
56	0h1238	Multi-step frequency 7		15.00	O	

4) Displayed only when bA07 (V/F pattern) is set to 2 (User V/F).

* Settings can be changed during the inverter operation.

Display	Comm. Address	Name	Setting Range	Initial Value	Property*	Page
70	0h1246	Multi-step acceleration time 1	0.00–6000.0 [s]5)	2.0	O	p.65, p.88
71	0h1247	Multi-step deceleration time 1		2.0	O	
72	0h1248	Multi-step acceleration time 2		3.0	O	
73	0h1249	Multi-step deceleration time 2		3.0	O	
74	0h124A	Multi-step acceleration time 3		4.0	O	
75	0h124B	Multi-step deceleration time 3		4.0	O	
76	0h124C	Multi-step acceleration time 4		5.0	O	
77	0h124D	Multi-step deceleration time 4		5.0	O	
78	0h124E	Multi-step acceleration time 5		4.0	O	
79	0h124F	Multi-step deceleration time 5		4.0	O	
80	0h1250	Multi-step acceleration time 6		3.0	O	
81	0h1251	Multi-step deceleration time 6		3.0	O	
82	0h1252	Multi-step acceleration time 7		2.0	O	
83	0h1253	Multi-step deceleration time 7		2.0	O	

5) The setting range varies depending on the set value of the bA08 code.

* Settings can be changed during the inverter operation.

9.4 Expanded Function group (PAR→Ad)

Display	Comm. Address	Name	Setting Range		Initial Value	Property*	Page
00	x	Jump Code	0–79		24	O	p.43
01	0h1301	Acceleration pattern	0	Linear pattern	0	X	p.91
			1	S pattern			
02	0h1302	Deceleration pattern	0	Linear	0	X	
			1	S-curve			
03	0h1303	S-curve start point gradient	1–100 [%]		40	X	
04	0h1304	S-curve end point gradient	1–100 [%]		40	X	
08	0h1308	Stop mode selection	0	Deceleration stop	0	X	p. 65, p. 101, p.107, p.140
			1	DC braking stop			
			2	Free run stop			
09	0h1309	Forward and reverse run prevention	0	Allow forward and reverse run	0	X	p.64, p.84
			1	Prevent forward run			
			2	Prevent reverse run			
10	0h130A	Starting with power on selection	0	No	0	O	p.84
			1	Yes			
12	0h130C	DC braking time at startup	0.0–60.0 [s]		0.0	X	p.107
13	0h130D	DC braking rate at startup	0–200 [%]		50	X	
14[1)]	0h130E	Output blocking time before DC braking	0.00–60.00 [s]		0.00	X	p.65, p.107
15[1)]	0h130F	DC braking time	0.0–60.0 [s]		1.0	X	
16[1)]	0h1310	DC braking rate	0–200 [%]		50	X	
17[1)]	0h1311	DC braking frequency	Start frequency–60.00 [Hz]		5.00	X	
20	0h1314	Frequency	Start frequency - Maximum frequency [Hz]		5.00	X	p.65, p.117
21	0h1315	Dwell time	0.0–10.0 [초]		0.0	X	

1) Displayed only when Ad08 is set to 1 (DC braking stop).
* Settings can be changed during the inverter operation.

Display	Comm. Address	Name	Setting Range		Initial Value	Property*	Page
24	0h1318	Frequency lower	0	No	0	X	p.102

Display	Comm. Address	Name	Setting Range		Initial Value	Property*	Page
		and upper limit	1	Yes			
25[2)]	0h1319	Frequency lower limit	Starting frequency–frequency upper limit [Hz]		0.50	X	p.65, p.102
26[2)]	0h131A	Frequency upper limit	0.00–Maximum frequency [Hz]		60.00	X	
27	0h131B	Frequency jump	0	No	0	X	p.104
			1	Yes			
28[3)]	0h131C	Frequency jump lower limit 1	Starting frequency–frequency jump upper limit [Hz]		10.00	X	
29[3)]	0h131D	Frequency jump upper limit 1	Frequency jump lower limit 1–maximum frequency [Hz]		15.00		
30[3)]	0h131E	Frequency jump lower limit 2	Starting frequency–frequency jump upper limit 2 [Hz]		20.00		
31[3)]	0h131F	Frequency jump upper limit 2	Frequency jump lower limit 2–maximum frequency [Hz]		25.00		
32[3)]	0h1320	Frequency jump lower limit 3	Starting frequency–frequency jump upper limit 3–[Hz]		30.00		
33[3)]	0h1321	Frequency jump upper limit 3	Frequency jump lower limit 3–maximum frequency [Hz]		35.00		

2) Displayed only when Ad24 (Frequency lower and upper limit) is set to 1.

3) Displayed only when Ad27 (Frequency jump) is set to 1.

* Settings can be changed during the inverter operation.

Display	Comm. Address	Name	Setting Range	Initial Value	Property*	Page
41[4)]	0h1329	Brake open current	0.0–180.0 [%]	50.0	O	p.140, p.220
42[4)]	0h132A	Brake open delay time	0.00–10.00 [s]	1.00	X	p.140
44[4)]	0h132C	Brake open forward frequency	0.00–Maximum frequency [Hz]	1.00	X	
45[4)]	0h132D	Brake open reverse frequency	0.00–Maximum frequency [Hz]	1.00	X	
46[4)]	0h132E	Brake close delay time	0.00–10.00 [s]	1.00	X	
47[4)]	0h132F	Brake close frequency	0.00–Maximum frequency [Hz]	2.00	X	
51	0h1333	Energy saving operation	0–30 [%]	0	O	p.126
63	0h133F	Motor RPM display gain	1–1000 [%]	100	O	p.151
64[5)]	0h1340	Up-down operation frequency save	0.00–Maximum frequency [Hz]	0.00	O	p.76, p.112
65	0h1341	Up-down operation frequency save selection	0 No 1 Yes	0	X	
66	0h1342	Up-down operation mode selection	0 Maximum/minimum frequency reference 1 Increase or decrease based on the step frequency (Ad67) 2 Mixed function of 0 and 1	0	X	p.76, p.112
67	0h1343	Up-down operation step frequency	0.00–Maximum frequency [Hz]	0.00	X	
79	0h134F	DB operation voltage	300–400 [V]	390	X	-

4) Displayed only when OU31 (Multi-function relay setting) or OU32 (Multi-function output 2 function setting) is set to 19 (Brake signal setting).

5) Displayed only when Ad65 (Up-down operation frequency save selection) is set to 1.

* Settings can be changed during the inverter operation.

9.5 Control Function group (PAR→Cn)

Display	Comm. Address	Name	Setting Range	Initial Value	Property *	Page
00	x	Jump Code	0–74	4	O	p.43
04	0h1404	Carrier frequency settings (operation noise settings)	1.0–15.0 [kHz]	3.0	O	p.130, p.222
71	0h1447	Speed search selection	BITS: 0000–1111 ---1: Speed search on general acceleration --1-: Speed search on operation after fault trip -1--: Speed search on restart after instantaneous power interruption 1---: Speed search when power is on (Ad10)	0000	X	p.40, p.127, p.220
72	0h1448	Speed search current level	80–200 [%]	100	O	p.127
73	0h1449	Speed search P gain	0–9999	500	O	
74	0h144A	Speed search I gain	0–9999	1000	O	

* Settings can be changed during the inverter operation.

9.6 Input Terminal Block Function group (PAR→In)

Display	Comm. Address	Name	Setting Range	Initial Value	Property*	Page
00	x	Jump Code	0–90	65	O	p.43
07	0h1507	Time constant of V1 input filter	0–9999	10	O	p.62, p.68, p.135
08	0h1508	V1 Minimum input voltage	0.00–V1 Maximum input voltage [V]	0.00	O	p.62, p.68, p.135
09	0h1509	Frequency corresponding to V1 minimum input voltage	0.00–Maximum frequency [Hz]	0.00	O	p.62, p.68, p.135
10	0h150A	V1 Maximum input voltage	V1 Minimum input voltage–10.00 [V]	10.00	O	
11	0h150B	Frequency corresponding to V1 maximum input voltage	0.00–Maximum frequency [Hz]	60.00	O	
37	0h1525	Time constant of V0 input filter	0–9999	10	O	p.62, p.68,
38	0h1526	V0 Minimum input voltage	0.00–V0 Maximum input voltage [V]	0.00	O	p.62, p.68, p.135
39	0h1527	Frequency corresponding to V0 minimum input voltage	0.00–Maximum frequency [Hz]	0.00	O	p.62, p.68, p.135
40	0h1528	V0 Maximum input voltage	V0 Minimum input voltage–5.00 [V]	5.00	O	
41	0h1529	Frequency corresponding to V0 maximum input voltage	0.00–Maximum frequency [Hz]	60.00	O	

* Settings can be changed during the inverter operation.

Display	Comm. Address	Name	Setting Range	Initial Value	Property*	Page
52[1)]	0h1534	I input filter time constant	0–9999	10	O	p.62, p.70, p.73
53[1)]	0h1535	I minimum input current	0.00–I maximum input current [mA]	4.00	O	p.62, p.70, p.74, p.135
54[1)]	0h1536	Frequency corresponding to I minimum input current	0.00–Maximum frequency [Hz]	0.00	O	p.62, p.70, p.73
55[1)]	0h1537	I maximum input current	I minimum input current–20.00 [mA]	20.00	O	
56[1)]	0h1538	Frequency corresponding to I maximum input current	0.00–Maximum frequency [Hz]	60.00	O	
57[1)]	0h1539	V input filter time constant	0– 9999	10	O	p.62, p.72, p.74
58[1)]	0h153A	V minimum input voltage	0.00–V maximum input voltage [V]	0.00	O	p.62, p.70, p.74, p.135
59[1)]	0h153B	Frequency corresponding to V minimum input voltage	0.00–Maximum frequency [Hz]	0.00	O	
60[1)]	0h153C	V maximum input voltage	V minimum input voltage–10.00 [V]	10.00	O	
61[1)]	0h153D	Frequency corresponding to V maximum input voltage	0.00–Maximum frequency [Hz]	60.00	O	

1) Available only for models equipped with advanced I/O.

* Settings can be changed during the inverter operation.

Display	Comm. Address	Name	Setting Range			Initial Value	Property*	Page
65[2)]	0h1541	Multi-function input terminal P1 function setting	0	Forward run command (FX)		0	X	p.62, p.78, p.110, p.112, p.116 , p.132, p.164
			1	Reward run command (RX)				
			2	Emergency stop (Emergency Stop Trip)				
			3	Reset when fault trip occurs (RESET)				
			4	Jog operation command (JOG)				
66[2)]	0h1542	Multi-function input terminal P2 function setting	5	Multi-step speed –low		1		
			6	Multi-step speed –middle				
			7	Multi-step speed –high				
			8	Multi-step acc/dec –low				
			9	Multi-step acc/dec –middle				
			10	Multi-step acc/dec –high				
			11	DC braking during stop command				
67[2)]	0h1543	Multi-function input terminal P3 function setting	12	2nd motor selection		2		
			13	-Reserved-				
			14	-Reserved-				
			15	Up-down operation function	Frequency increase command (UP)			
			16		Frequency reduction command (DOWN)			
68[1)2)]	0h1544	Multi-function input terminal P4 function setting	17	3-wire operation		3		
			18	External trip signal input: A terminal (EtA)				
			19	External trip signal input: B terminal (EtB)				
			20	-Reserved-				
69[1)2)]	0h1545	Multi-function input terminal P5 function setting	21	Transition from PID to general operation		4		
			22	2nd Source				
			23	Fix analog command frequency				
			24	Acceleration/deceleration stop command				
			25	Initialize saved up-down frequency				
			26	Jog forward operation command (JOG-FX)				
			27	Jog reverse operation command (JOG-RX)				

1) Available only for models equipped with advanced I/O.

2) Refer to 10 Troubleshooting on page 217 for the external trip signal input display in In65–69. Do not set two or more multi-function input terminals to the same function.

* Settings can be changed during the inverter operation.

Display	Comm. Address	Name	Setting Range		Initial Value	Property*	Page
70	0h1546	PNP/NPN selection switch	0	PNP	-	-	-
			1	NPN			
85	0h1555	Multi-function input terminal filter time constant	1–15		4	O	p.62
87	0h1557	Multi-function input contact selection	P5 – P1		0 0000 3)	X	-
			0	A contact (NO)			
			1	B contact (NC)			
90	0h155A	Input terminal block status display	BIT2 BIT1 BIT0 P3 P2 P1 P1 to P3 are displayed for models equipped with standard I/O. BIT4 BIT3 BIT2 BIT1 BIT0 P5 P4 P3 P2 P1 P1 to P5 are displayed for models equipped with advanced I/O.		-	-	p.39, p.161

3) The initial value will be displayed on the keypad as 0000 .

* Settings can be changed during the inverter operation.

9.7 Output Terminal Block Function group (PAR→OU)

Display	Comm. Address	Name	Setting Range			Initial Value	Property*	Page
00	x	Jump Code	0–58			30	O	p.43
01	0h1601	Analog output item setting	Parameter setting		Output item corresponding to10 [V]	0	O	p.142
			0	Output frequency	Maximum frequency (FrM)			
			1	Current	150 [%] or inverter's rated current			
			2	Output voltage	AC 282 V			
			3	Inverter DC voltage	DC 410 V			
02	0h1602	Analog output level adjustment	10–200 [%]			100	O	
30	0h161E	Fault output setting	bit	000–111		010	O	p.39, p.143
			--1	Operation when low voltage trip occurs				
			-1-	Operation when fault trip other than low voltage trip occurs				
			1--	Operation when number of automatic restarts after fault trip (Pr09) is set				

* Settings can be changed during the inverter operation.

Display	Comm. Address	Name	Setting Range		Initial Value	Property*	Page
31	0h161F	Multi-function relay setting	0	FDT-1	17	O	p.127, p.140, p.150, p.143, p.161 p.162, p.165, p.166, p.218
			1	FDT-2			
			2	FDT-3			
			3	FDT-4			
			4	FDT-5			
			5	Overload (OL)			
			6	Inverter Overload (IOL)			
			7	Motor stall (STALL)			
			8	Over voltage (Ovt)			
			9	Low voltage (Lvt)			
			10	Inverter cooling fan overheat (OHt)			
			11	Lost command			
			12	Run			
			13	Stop			
			14	At constant speed			
			15	Speed search			
			16	Ready			
			17	Fault output setting			
			18	Abnormal cooling fan alarm			
			19	Brake signal setting			
32	0h1620	Multi-function output 2 feature selection	Same as OU31		17	O	
41	0h1629	Output terminal block status display	BIT1	BIT0	00	O	p.39, p.154
			Relay2 / Open collector output	Relay1			
52	0h1634	Multi-function output/relay contact selection	Q1, Relay1		00[1)]	X	-
			0	A contact (NO)			
			1	B Contact (NC)			
57	0h1639	Detection frequency	0.00–Maximum frequency [Hz]		30.00	O	p.143
58	0h163A	Detection frequency band			10.00	O	

1) The initial value will be displayed on the keypad as 0000.

* Settings can be changed during the inverter operation.

9.8 Communication Function group (PAR→CM)

Display	Comm. Address	Name	Setting Range		Initial Value	Property*	Page
00	x	Jump Code	0–58		31	O	p.43
01	0h1701	Inverter station ID	1–250		1	O	p.76, p.83 p.173
02	0h1702	Communication protocol setting	0	Modbus RTU	0	X	
			1	LS BUS			
03	0h1703	Communication speed	0	1,200 [bps]	3	O	
			1	2,400 [bps]			
			2	4,800 [bps]			
			3	9,600 [bps]			
			4	19,200 [bps]			
			5	38,400 [bps]			
04	0h1704	Parity/stop bit setting	0	Parity: None, Stop Bit: 1	0	O	p.173
			1	Parity: None, Stop Bit: 2			
			2	Parity: Even, Stop Bit: 1			
			3	Parity: Odd, Stop Bit: 1			
05	0h1705	Communication time setting	2–100 [ms]		5	O	
31	0h171F	Read address registration 1	0000–A4FF		000A	O	p.176
32	0h1720	Read address registration 2			000E		
33	0h1721	Read address registration 3			000F		
34	0h1722	Read address registration 4			0000		
35	0h1723	Read address registration 5	0000–A4FF		0000	O	
36	0h1724	Read address registration 6			0000		
37	0h1725	Read address registration 7			0000		
38	0h1726	Read address registration 8			0000		
51	0h1733	Write address registration 1	0000–A4FF		0005	O	
52	0h1734	Write address registration 2			0006		
53	0h1735	Write address registration 3			0000		
54	0h1736	Write address registration 4			0000		
55	0h1737	Write address			0000		

Display	Comm. Address	Name	Setting Range	Initial Value	Property*	Page
		registration 5				
56	0h1738	Write address registration 6		0000		
57	0h1739	Write address registration 7		0000		
58	0h173A	Write address registration 8		0000		

* Available only for models equipped with advanced I/O.
* Settings can be changed during the inverter operation.

9.9 Application Function group (PAR→AP)

Display	Comm. Address	Name	Setting Range		Initial Value	Property*	Page
00	x	Jump Code	0–71		20	O	p.43
01	0h1801	PID control setting	0	No	0	X	p.121
			1	Yes			
02[1)]	0h1802	PID control unit selection	0	Frequency [Hz]	0	X	p.121
			1	Percentage [%]			
18[1)]	0h1812	Amount of PID feedback	When AP 2 is 0	Frequency display range: 0.00–400.00 [Hz]	-	-	
			When AP 2 is 1	Percentage display range: 0.0–100.0 [%]			
19[1)]	0h1813	PID reference	When AP 2 is 0	0.00–Maximum frequency [Hz]	0.00	O	
			When AP 2 is 1	0.0–100.0 [%]			
20[1)]	0h1814	PID reference setting	0	Keypad 1	0	X	
			1	Keypad 2			
			2	V1: 0–10 [V]			
			3	I2(I): 0–20 [mA] [2)]			
			4	I2(V): 0–10 [V] [2)]			
			5	RS-485 communication [2)]			
21[1)]	0h1815	PID feedback setting	0	I2(I) (0–20 [mA]) [2)]	2	X	
			1	I2(V) (0–10 [V]) [2)]			
			2	V1 (0–10 [V])			
			3	RS-485 communication [2)]			

Display	Comm. Address	Name	Setting Range	Initial Value	Property*	Page
22[1)]	0h1816	PID controller P gain	0.0–999.9 [%]	300.0	O	p.121
23[1)]	0h1817	PID controller integral time (I gain)	0.10–32.00 [s]	1.00	O	
24[1)]	0h1818	PID controller differentiation time (D gain)	0.00–30.00 [s]	0.00	O	
28[1)]	0h181C	PID control mode setting	0 Normal PID control 1 Process PID control	0	X	
29[1)]	0h181D	PID output upper limit frequency	PID output lower limit frequency–maximum frequency [Hz]	60.00	O	
30[1)]	0h181E	PID output lower limit frequency	Starting frequency–PID output upper limit frequency [Hz]	0.50	O	
37[1)]	0h1825	Sleep delay time	0.0–2000.0 [s]	60.0	X	
38[1)]	0h1826	Sleep frequency	0.00–Maximum frequency [Hz]	0.00	O	
39[1)]	0h1827	Wake-up (Wake-up) level	0.0–100.0 [%]	35.0	O	
70	0h1846	Draw operation mode selection	0 Do not use draw operation 1 V1(0–10 [V]) input draw operation 2 V0 (0–5 [V]) input draw operation 3 I2(I) (0–20 [mA]) input draw operation [2)] 4 I2(V) (0–10 [V]) input draw operation [2)]	0	X	p.148
22[1)]	0h1816	Draw percentage	0.0–100.0 [%]	0.0	O	

1) Displayed only when AP01 (PID control setting) is set to 1.
2) Available only for models equipped with advanced I/O.
* Settings can be changed during the inverter operation.

9.10 Protection Function group (PAR→Pr)

Display	Comm. Address	Name	Setting Range		Initial Value	Property*	Page
00	x	Jump Code	0–96		40	O	p.43
05	0h1905	Output open-phase protection setting	0	No	0	O	p.163, p.217
			1	Yes			
08	0h1908	Operation on reset after fault trip	0	No	0	O	p.85
			1	Yes			
09	0h1909	Number of automatic restarts after fault trip	0–10 [times]		0	O	p.129
10	0h190A	Automatic restart delay time after fault trip	0.0–60.0 [s]		1.0	O	
12	0h190C	Motion at speed command loss	0	Continue to run at frequency before the command loss	0	O	p.166, p.175
			1	Free run stop (output block)			
			2	Deceleration stop			
13	0h190D	Time to decide speed command loss	0.1–120.0[s]		1.0	O	
15	0h190F	Time to determine analog speed command loss	0	Not operating	0	O	p.166
			1	Operating at half of the set value			
			2	Operating under the set value			

* Settings can be changed during the inverter operation.

Display	Comm. Address	Name	Setting Range	Initial Value	Property*	Page
18[1)]	0h1912	Overload alarm level	30–150 [%]	150	O	p.161
19	0h1913	Overload warning time	0.0–30.0 [s]	10.0	O	
20	0h1914	Overload warning selection	0 No 1 Block inverter output when overloaded	1	O	p.161, p.218
21[2)]	0h1915	Overload fault level	30–200 [%]	180	O	p.161, p.220
22[2)]	0h1916	Overload fault time	0.0–60.0 [s]	60.0	O	p.161
40	0h1928	ETH selection	0 No 1 Yes	0	O	p.159, p.217
41[3)]	0h1929	Motor cooling type	0 General motor that cooler is attached to its axis 1 Motor that supplies separate power to the cooler	0	O	p.159
42[3)]	0h192A	Electronic thermal 1 minute level	Electronic thermal continuous operation level–200 [%]	150	O	
43[3)4)]	0h192B	Electronic thermal continuous operation level	50–Electronic thermal 1 minute level [%]	100	O	
50	0h1932	Stall prevention selection	bit 000–111 --1 Prevent stall when accelerating -1- Prevent stall when running at a constant speed 1-- Prevent stall when decelerating	000	X	p.39, p.135, p.162
52	0h1934	Stall prevention level	30–200 [%]	150	X	p.162

1) Multi-function output
2) Displayed only when Pr20 (Overload warning selection) is set to 1.
3) Displayed only when Pr40 (ETH selection) is set to 1.
4) The value cannot be set to 150% or more.
* Settings can be changed during the inverter operation.

Display	Comm. Address	Name	Setting Range		Initial Value	Property*	Page
53[5]	0h1935	Voltage limit when using stall prevention during deceleration	0	No	0	X	p.135
			1	Yes			
65	0h1941	DB resistor warning level limit setting	0	Use DB resistor without level limit	1	O	p.168
			1	Use DB resistor during the time set at Pr66			
66[6]	0h1942	DB resistor warning level	0–30 [%]		10	O	
79	0h194F	Operation at fan fault	0	Run continuously	1	O	p.150, p.143
			1	Stop operation			
80[7] [8] [9]	0h1950	Initial charging circuit trip protection	0	Not use ROT function	1	x	p.170
			1	Use ROT function1			
91	0h195B	Fault history 1	Types and information of fault trips		nOn	-	p.156, p.217
92	0h195C	Fault history 2					
93	0h195D	Fault history 3					
94	0h195E	Fault history 4					
95	0h195F	Fault history 5					
96	0h1960	Fault history deletion	0	Maintain history	0	O	
			1	Delete history			

5) Displayed only when Pr50 (Stall prevention selection) is set to 2 or 1.
6) Displayed only when Pr65 (DB resistor warning level limit setting) is set to 1.
7) Switching status of Pr80: [Use ROT function,], [Not use Rot function,], [Initial value,]
8) The Pr80 function can be used only when the input power is 0.4–2.2 kW.
9) There is a possibility of ROT trip when power is turned on within 1 second after LVT trip due to power OFF..
* Settings can be changed during the inverter operation.

9.11 2nd Motor Function group (PAR→M2)

Display	Comm. Address	Name	Setting Range	Initial Value	Property*	Page
00	X	Jump Code	0–30	12	O	p.43
04	0h1A04	2nd motor acceleration time	0.0–6000.0 [s][1)]	5.0	O	p.131
05	0h1A05	2nd motor deceleration time		10.0	O	
07	0h1A07	2nd motor base frequency	30.00–Maximum frequency [Hz]	60.00	X	
12	0h1A0C	2nd motor rated current	0.1–100.0 [A]	-	X	
25	0h1A19	2nd motor V/F pattern	0 Linear 1 Square reduction 2 User V/F	0	X	
26	0h1A1A	2nd motor forward torque boost	0.0–15.0 [%]	4.0	X	
27	0h1A1B	2nd motor reverse torque boost		4.0	X	
28	0h1A1C	2nd motor stall prevention level	30–150 [%]	150	X	
29	0h1A1D	2nd motor electronic thermal 1 minute level	2nd motor electronic thermal continuous operation level–200 [%]	150	O	
30	0h1A1E	2nd motor electronic thermal continuous operation level	50–2nd motor electronic thermal 1 minute level [%]	100	O	

* This group is displayed only when one of multi-function input terminal features (standard I/O models: In65–67, advanced I/O models: In65– 69) is set to 12 (2nd motor selection).

* Settings can be changed during the inverter operation.

1) The setting range varies depending on the set value of the bA08 code.

9.12 Config Mode group (PAR→CF)

Display	Comm. Address	Name	Setting Range		Initial Value	Property*	Page
00	x	Jump Code	0–95		1	O	p.43, p.52
01	0h1B01	Display after power on	Items that are displayed after power is on		0	O	p.151
			0	Command Frequency			
			1	Acceleration time			
			2	Deceleration time			
			3	Command source			
			4	Frequency setting method			
			5	Motor selection			
			6	Rated motor current			
			7	Base frequency			
			8	Maximum frequency			
			9	Output voltage adjustment			
			10	Forward boost			
			11	Reverse boost			
			12	Output current			
			13	Motor RPM			
			14	Inverter DC voltage			
			15	User select signal (code, dr81 setting)			
			16	Currently out of order			
			17	Open hidden groups			
02	0h1B02	I/O Type	0	Standard I/O	-	-	-
			1	Advanced I/O			

* Settings can be changed during the inverter operation.

Display	Comm. Address	Name	Setting Range		Initial Value	Property*	Page
79	0h1B4F	Software version	Inverter program version		-	-	-
93	0h1B5D	Parameter initialization	0	Do not initialize	0	X	p.52 p.136
			1	Initialize all			
			2	Initialize operation group			
			3	Initialize drive (dr) group			
			4	Initialize basic function (bA) group			
			5	Initialize expanded function (Ad) group			
			6	Initialize control function (Cn) group			
			7	Initialize input terminal block (In) group			
			8	Initialize output terminal block (OU) group			
			9	Initialize communication function (CM) group			
			10	Initialize application function (AP) group			
			11	Initialize protection function (Pr) group			
			12	Initialize 2nd motor function (M2) group			
			13	Initialize config mode (CF) group			
94	0h1B5E	Password registration	0000–FFFF		0000	O	p.136
95	0h1B5F	Parameter lock	UL (Unlock)	Unlock parameter	UL	O	
			L (Lock)	Lock parameter			

* Settings can be changed during the inverter operation.

10 Troubleshooting

This chapter explains how to troubleshoot a problem when inverter protective functions, fault trips, warning signals, or a fault occurs. If the inverter does not work normally after following the suggested troubleshooting steps, please contact the LSIS customer service center.

10.1 Trips

When the inverter detects a fault, it stops the operation (trips) or sends out a warning signal. When a trip or warning occurs, the keypad displays the information. Users can read the warning message at Pr91–Pr95. When more than 2 trips occur at roughly the same time, the keypad (basic keypad with 7-segment display) displays the higher priority fault trip information.

The fault conditions can be categorized as follows:

- Level: When the fault is corrected, the trip or warning signal disappears and the fault is not saved in the fault history.
- Latch: When the fault is corrected and a reset input signal is provided, the trip or warning signal disappears.
- Fatal: When the fault is corrected, the fault trip or warning signal disappears only after the user turns off the inverter, waits until the charge indicator light goes off, and turns the inverter on again. If the inverter is still in a fault condition after powering it on again, please contact the supplier or the LSIS customer service center.

10.1.1Fault Trips

Protection Functions for Output Current and Input Voltage

Keypad Display	Item	Type	Description
OLt	OLt (Over Load)	Latch	Displayed when the motor overload trip is activated and the actual load level exceeds the set level. Operates when Pr20 is set to a value other than 0.
OCt	OCt (Over Current)	Latch	Displayed when inverter output current exceeds 200% of the rated current.
Ovt	Ovt (Over Voltage)	Latch	Displayed when internal DC circuit voltage exceeds the specified value.
Lvt	Lvt (Low Voltage)	Level	Displayed when internal DC circuit voltage is less than the specified value.
GFt	GFt (Ground Trip)	Latch	Displayed when a ground fault trip occurs on the output side of the inverter and causes the current to exceed the specified value. The specified value varies depending on inverter capacity.
EtH	EtH (E-Thermal)	Latch	Displayed based on inverse time-limit thermal characteristics to prevent motor overheating. Operates when Pr40 is set to a value other than 0.
OPO	OPO (Out Phase Open)	Latch	Displayed when a 3-phase inverter output has one or more phases in an open circuit condition. Operates when bit 1 of Pr05 is set to 1.
IOL	IOL (Inverter OLT)	Latch	Displayed when the inverter has been protected from overload and resultant overheating, based on inverse time-limit thermal characteristics. Allowable overload rate for the inverter is 150% for 1 min.
rOt	rOt	Fatal	Displayed when the input power is unstable or an initial charging circuit trip occurs while supplying power to the inverter. [1) 2)]

1) The ‘rOt’ t rip occurs only in the 0.4–2.2 kW models.

2) There is a possibility of ROT trip when power is turned on within 1 second after LVT trip due to power OFF.

Protection Functions Using Abnormal Internal Circuit Conditions and External Signals

Keypad Display	Item	Type	Description
OHt	OHt (Over Heat)	Latch	Displayed when the temperature of the inverter heat sink exceeds the specified value.
ntC	ntC (NTC Open)	Latch	Displayed when an error is detected in the temperature sensor of the Insulated Gate Bipolar Transistor (IGBT).
FAn	FAn (Fan Trip)	Latch	Displayed when an error is detected in the cooling fan[2].
EtA Etb	EtA,Etb (External Trip A,B)	Latch	When the multi-function input terminal of the I/O is set to EtA or EtB, the input terminal is used as the signal. • EtA is displayed when the CM and short signal are generated when the multi-function input is NPN or P24 and the short signal is generated when multi-function input is PNP. • EtB is displayed when the CM and open signal are generated when multi-function input is NPN or P24 and open signal is generated when multi-function input is PNP.
COM	COM (Communication trip)	Latch	Displayed when communication between the Main DSP and the IO CPU is disconnected for more than 500 ms.
nbr	nbr	Latch	Displayed when the inverter's output current is below the value set at Ad41 during the external brake signal operation based on the multi-function terminal function setting. Set OU31 or OU32 to 19 (Brake signal setting).

2) The cooling fan trip can be occurred when it is overloaded, its connectors are disconnected, or its components break. When the problems are solved, Fan Trip is cleared and the fan operates normally.

10.2 Troubleshooting Fault Trips

When a fault trip or warning occurs due to a protection function, refer to the following table for possible causes and remedies.

Item	Cause	Remedy
OLt (Over Load)	The load is greater than the motor's rated capacity.	Ensure that the motor and inverter have appropriate capacity ratings.
	The set value for the overload trip level (Pr21) is too low.	Increase the set value for the overload trip level.
OCt (Over Current)	Acc/Dec time is too short, compared to load inertia (bA16).	Increase Acc/Dec time.
	The inverter load is greater than the rated capacity.	Replace the inverter with a model that has increased capacity.
	The inverter supplied an output while the motor was idling.	Operate the inverter after the motor has stopped or use the speed search function (Cn71).
	The mechanical brake of the motor is operating too fast.	Check the mechanical brake.
Ovt (Over Voltage)	Deceleration time is too short for the load inertia (bA16).	Increase the acceleration time.
	A generative load occurs at the inverter output.	Use the braking unit.
	The input voltage is too high.	Determine if the input voltage is above the specified value.
Lvt (Low Voltage)	The input voltage is too low.	Determine if the input voltage is below the specified value. Adjust the bA19 (Inverter input voltage) value.
	A load greater than the power capacity is connected to the system (e.g., a welder, direct motor connection, etc.)	Increase the power capacity.
	The magnetic contactor connected to the power source has a faulty connection.	Replace the magnetic contactor.
GFt (Ground Trip)	A ground fault has occurred in the inverter output wiring.	Check the output wiring.
	The motor insulation is damaged.	Replace the motor.

Item	Cause	Remedy
EtH (E-Thermal)	The motor has overheated.	Reduce the load or operation frequency.
	The inverter load is greater than the rated capacity.	Replace the inverter with a model that has increased capacity.
	The inverter has been operated at low speed for an extended duration.	Replace the motor with a model that supplies extra power to the cooling fan.
OPO (Out Phase Open)	The magnetic contactor on the output side has a connection fault.	Check the magnetic contactor on the output side.
	The output wiring is faulty.	Check the output wiring.
IOL (Inverter OLT)	The load is greater than the rated motor capacity.	Replace the motor and inverter with models that have increased capacity.
	The torque boost level is too high.	Reduce the torque boost level.
OHt (Over Heat)	There is a problem with the cooling system.	Determine if a foreign object is obstructing the air inlet, outlet, or vent.
	The inverter cooling fan has been operated for an extended period.	Replace the cooling fan.
	The ambient temperature is too high.	Keep the ambient temperature below 50℃.
ntC (NTC Open)	The ambient temperature is too low.	Keep the ambient temperature above -10℃.
	There is a fault with the internal temperature sensor.	Contact the retailer or the LSIS customer service center.
FAn (Fan Trip)	A foreign object is obstructing the fan's air vent.	Remove the foreign object from the air inlet or outlet.
	The cooling fan needs to be replaced.	Replace the cooling fan.
rOt (Relay Open Trip	The input power is unstable or an initial charging circuit trip occurs while supplying power to the inverter.	Turn off and on the power again. If the problem continues, stop using the inverter and contact the retailer or the LSIS customer service center.

10.3 Troubleshooting Other Faults

When a fault other than those identified as fault trips or warnings occurs, refer to the following table for possible causes and remedies.

Item	Cause	Remedy
Parameters cannot be set.	The inverter is in operation (driving mode).	Stop the inverter to change to program mode and set the parameter.
	The parameter access is incorrect.	Check the correct parameter access level and set the parameter.
	The password is incorrect.	Check the password, disable the parameter lock and set the parameter.
	Low voltage is detected.	Check the power input to resolve the low voltage and set the parameter.
The motor does not rotate.	The frequency command source is set incorrectly.	Check the frequency command source setting.
	The operation command source is set incorrectly.	Check the operation command source setting.
	Power is not supplied to the terminal R/S/T.	Check the terminal connections R/S/T and U/V/W.
	The charge lamp is turned off.	Turn on the inverter.
	The operation command is off.	Turn on the operation command (RUN).
	The motor is locked.	Unlock the motor or lower the load level.
	The load is too high.	Operate the motor independently.
	An emergency stop signal is input.	Reset the emergency stop signal.

Item	Cause	Remedy
The motor does not rotate.	The wiring for the control circuit terminal is incorrect.	Check the wiring for the control circuit terminal.
	The input option for the frequency command is incorrect.	Check the input option for the frequency command.
	The input voltage or current for the frequency command is incorrect.	Check the input voltage or current for the frequency command.
	The PNP/NPN mode is selected incorrectly.	Check the PNP/NPN mode setting.
	The frequency command value is too low.	Check the frequency command and input a value above the starting frequency (dr19).
	The [STOP] key is pressed.	Check that the stoppage is normal, if so resume operation normally.
	Motor torque is too low.	If the fault remains, replace the inverter with a model with increased capacity.
The motor rotates in the opposite direction to the command.	The wiring for the motor output cable is incorrect.	Determine if the cable on the output side is wired correctly to the phase (U/V/W) of the motor.
	The signal connection between the control circuit terminal (forward/reverse rotation) of the inverter and the forward/reverse rotation signal on the control panel side is incorrect.	Check the forward/reverse rotation wiring.
The motor only rotates in one direction.	Reverse rotation prevention is selected.	Remove the reverse rotation prevention.
	The reverse rotation signal is not provided, even when a 3-wire sequence is selected.	Check the input signal associated with the 3-wire operation and adjust as necessary.

Item	Cause	Remedy
The motor is overheating.	The load is too heavy.	Reduce the load. Increase Acc/Dec time.
		Check the motor parameters and set the correct values.
		Replace the motor and the inverter with models with appropriate capacity for the load.
	The ambient temperature of the motor is too high.	Lower the ambient temperature of the motor.
	The phase-to-phase voltage of the motor is insufficient.	Use a motor that can withstand phase-to-phase voltages surges greater than the maximum surge voltage.
		Only use motors suitable for applications with inverters.
		Connect the AC reactor to the inverter output (set the carrier frequency (Cn04) to 2 kHz).
	The motor fan has stopped or the fan is obstructed with debris.	Check the motor fan and remove any foreign objects.
The motor stops during acceleration or when connected to load.	The load is too high.	Reduce the load.
		Replace the motor and the inverter with models with appropriate capacity for the load.
The motor does not accelerate. /The acceleration time is too long.	The frequency command value is low.	Set an appropriate value.
	The load is too high.	Reduce the load and increase the acceleration time. Check the mechanical brake status.

Item	Cause	Remedy
The motor does not accelerate. /The acceleration time is too long.	The acceleration time is too long.	Change the acceleration time.
	The combined values of the motor properties and the inverter parameter are incorrect.	Change the motor related parameters.
	The stall prevention level during acceleration is low.	Change the stall prevention level.
	The stall prevention level during operation is low.	
	Starting torque is insufficient.	If the fault remains, replace the inverter with a model with increased capacity.
Motor speed varies during operation.	There is a high variance in load.	Replace the motor and inverter with models that have increased capacity.
	The input voltage varies.	Reduce input voltage variation.
	Motor speed variations occur at a specific frequency.	Adjust the output frequency to avoid a resonance area.
The motor rotation is different from the setting.	The V/F pattern is set incorrectly.	Set a V/F pattern that is suitable for the motor specification.
The motor deceleration time is too long even with Dynamic Braking (DB) resistor connected.	The deceleration time is set too long.	Change the setting accordingly.
	The motor torque is insufficient.	If motor parameters are normal, it is likely to be a motor capacity fault. Replace the motor with a model with increased capacity.
	The load is higher than the internal torque limit determined by the rated current of the inverter.	Replace the inverter with a model with increased capacity.
Operation is difficult in underload applications.	The carrier frequency is too high.	Reduce the carrier frequency.
	Over-excitation has occurred due to an inaccurate V/F setting at low speed.	Reduce the torque boost value to avoid over-excitation.

Item	Cause	Remedy

Item	Cause	Remedy
While the inverter is in operation, a control unit malfunctions or noise occurs.	Noise occurs due to switching inside the inverter.	Change the carrier frequency (Cn04) to the minimum value.
		Install a micro surge filter in the inverter output.
When the inverter is operating, the earth leakage breaker is activated.	An earth leakage breaker will interrupt the supply if current flows to ground during inverter operation.	Connect the inverter to a ground terminal.
		Check that the ground resistance is less than 100 Ω for 200 V inverters.
		Check the capacity of the earth leakage breaker and make the appropriate connection, based on the rated current of the inverter.
		Reduce the carrier frequency (Cn04).
		Make the cable length between the inverter and the motor as short as possible.
The motor vibrates severely and does not rotate normally.	Phase-to-phase voltage of 3-phase power source is not balanced.	Check the input voltage and balance the voltage.
		Check and test the motor’s insulation.
The motor makes humming, or loud noises.	Resonance occurs between the motor's natural frequency and the carrier frequency.	Slightly increase or decrease the carrier frequency (Cn04).
	Resonance occurs between the motor's natural frequency and the inverter’s output frequency.	Slightly increase or decrease the carrier frequency.
		Use the frequency jump function to avoid the frequency band where resonance occurs. (Ad27–33)

Item	Cause	Remedy
The motor vibrates/hunts.	The frequency input command is an external, analog command.	In situations of noise inflow on the analog input side that results in command interference, change the input filter time constant (In07, In52, In57).
	The wiring length between the inverter and the motor is too long.	Ensure that the total cable length between the inverter and the motor is less than 100 m.
The motor does not come to a complete stop when the inverter output stops.	It is difficult to decelerate sufficiently, because DC braking is not operating normally.	Adjust the DC braking parameter.
		Increase the set value for the DC braking current.
		Increase the set value for the DC braking stopping time. (Ad15)
The output frequency does not increase to the frequency reference.	The frequency reference is within the jump frequency range.	Set the frequency reference higher than the jump frequency range.
	The frequency reference is exceeding the upper limit of the frequency command.	Set the upper limit of the frequency command higher than the frequency reference.
	Because the load is too heavy, the stall prevention function is working.	Replace the inverter with a model with increased capacity.

11 Maintenance

This chapter explains how to replace the cooling fan, the regular inspections to complete, and how to store and dispose of the product. An inverter is vulnerable to environmental conditions and faults also occur due to component wear and tear. To prevent breakdowns, please follow the maintenance recommendations in this section.

Caution

- Before you inspect the product, read all safety instructions contained in this manual.
- Before you clean the product, ensure that the power is off.
- Clean the inverter with a dry cloth. Cleaning with wet cloths, water, solvents, or detergents may result in electric shock or damage to the product.

11.1 Regular Inspection Lists

11.1.1 Daily Inspections

Inspection area	Inspection item	Inspection details	Inspection method	Judgment standard	Inspection equipment
All	Ambient environment	Is the ambient temperature and humidity within the design range, and is there any dust or foreign objects present?	Refer to *1.3 Installation Considerations* on page *6*.	No icing (ambient temperature: -10 - +40) and no condensation (ambient humidity below 50%)	Thermometer, hygrometer, recorder
All	Inverter	Is there any abnormal vibration or noise?	Visual inspection	No abnormality	-
	Power voltage	Are the input and output voltages normal?	Measure voltages between R/T-phases in. the inverter	Refer to *12.1 Input and Output Specification* on page *234*.	Digital multimeter tester
Input/Output circuit	Smoothing capacitor	Is there any leakage from the inside?	Visual inspection	No abnormality	-

Inspection area	Inspection item	Inspection details	Inspection method	Judgment standard	Inspection equipment
		Is the capacitor swollen?			
Cooling system	Cooling fan	Is there any abnormal vibration or noise?	Turn off the system and check operation by rotating the fan manually.	Fan rotates smoothly	-
Display	Measuring device	Is the display value normal?	Check the display value on the panel.	Check and manage specified values.	Voltmeter, ammeter, etc.
Motor	All	Is there any abnormal vibration or noise?	Visual inspection	No abnormality	-
		Is there any abnormal smell?	Check for overheating or damage.		

11.1.2Annual Inspections

Inspection area	Inspection item	Inspection details	Inspection method	Judgment standard	Inspection equipment
Input/Output circuit	All	Megger test (between input/output terminals and earth terminal)	Disconnect inverter and short R/S/T/U/V/W terminals, and then measure from each terminal to the ground terminal using a Megger.	Must be above 5 MΩ	DC 500 V Megger
		Is there anything loose in the device?	Tighten up all screws.	No abnormality	
		Is there any evidence of parts overheating?	Visual inspection		
	Cable connections	Are there any corroded cables?	Visual inspection	No abnormality	-
		Is there any damage to cable			

Inspection area	Inspection item	Inspection details	Inspection method	Judgment standard	Inspection equipment
		insulation?			
	Terminal block	Is there any damage?	Visual inspection	No abnormality	-
	Smoothing capacitor	Measure electrostatic capacity.	Measure with capacity meter.	Rated capacity over 85%	Capacity meter
	Relay	Is there any chattering noise during operation?	Visual inspection	No abnormality	-
		Is there any damage to the contacts?	Visual inspection		
Input/output circuit	Braking resistor	Is there any damage from resistance?	Visual inspection	No abnormality	Digital multimeter / analog tester
		Check for disconnection.	Disconnect one side and measure with a tester.	Must be within ±10% of the rated value of the resistor.	
Control circuit Protection circuit	Operation check	Check for output voltage imbalance while the inverter is in operation.	Measure voltage between the inverter output terminal U/ V/ W.	Balance the voltage between phases within 4V.	Digital multimeter or DC voltmeter
		Is there an error in the display circuit after the sequence protection test?	Test the inverter output protection in both short and open circuit conditions.	The circuit must work according to the sequence.	
Cooling system	Cooling fan	Are any of the fan parts loose?	Check all connected parts and tighten all screws.	No abnormality	-
Display	Display device	Is the display value normal?	Check the command value on the display device.	Specified and managed values must match.	Voltmeter, Ammeter, etc.

11.1.3Bi-annual Inspections

Inspection area	Inspection item	Inspection details	Inspection method	Judgment standard	Inspection equipment
Motor	Insulation resistance	Megger test (between the input,	Disconnect the cables for	Must be above 5 MΩ.	DC 500 V Megger

Inspection area	Inspection item	Inspection details	Inspection method	Judgment standard	Inspection equipment
		output and earth terminals).	terminals U/V/W and test the wiring.		

Caution

Do not run an insulation resistance test (Megger) on the control circuit as it may result in damage to the product.

11.2 Storage and Disposal

11.2.1Storage

If you are not using the product for an extended period, store it in the following way:

- Store the product in the same environmental conditions as specified for operation (refer to*1.3 Installation Considerations* on page *6*).
- When storing the product for a period longer than 3 months, store it between 10˚C and 30˚C, to prevent depletion of the electrolytic capacitor.
- Do not expose the inverter to snow, rain, fog, or dust.
- Package the inverter in a way that prevents contact with moisture. Keep the moisture level below 70% in the package by including a desiccant, such as silica gel.
- Do not store the inverter in dusty or humid environments. If the inverter is installed in an unsuitable environment (for example, a construction site) and the inverter will be unused for an extended period, remove the inverter and store it in a suitable place.

11.2.2Disposal

When disposing of the product, categorize it as general industrial waste. Recyclable materials are included in the product, so recycle them whenever possible. The packing materials and all metal parts can be recycled. Although plastic can also be recycled, it can be incinerated under controlled conditions in some regions.

Caution

If the inverter has not been operated for a long time, capacitors lose their charging characteristics and are depleted. To prevent depletion, turn on the product once a year and allow the device to operate for 30-60 min. Run the device under no-load conditions.

12 Technical Specification

12.1 Input and Output Specification

Model LSLV□□□□M100–1EOFN□			0001	0002	0004	0008	0015	0022
Applied motor	Heavy load	HP	0.125	0.25	0.5	1.0	2.0	3.0
		kW	0.1	0.2	0.4	0.75	1.5	2.2
Rated output	Rated capacity (kVA)		0.3	0.6	0.95	1.9	3.0	4.5
	Rated current (A)		0.8	1.4	2.4	4.2	7.5	10.0
	Output frequency		0–400 Hz					
	Output voltage (V)		3-phase 200–240 V					
Rated input	Working voltage (V)		Single phase 200-240 V AC (-15% to +10%)					
	Input frequency		50–60 Hz (±5%)					
	Rated current (A)		1.0	1.8	3.7	7.1	13.6	18.7
Weight (lb/kg)			1.46/0.66		2.2/1		3.2/1.45	

- The standard motor capacity is based on a standard 4-pole motor.
- The standard used is based on a 220 V supply voltage
- The rated output current may be limited depending on the carrier frequency (Cn4) setting.
- The maximum output voltage cannot exceed the power voltage. The output voltage can be set below the power voltage.
- The output voltage outputs 20–40% less than normal when a motor is not connected to protect the inverter.

12.2 Product Specification Details

Item			Description	
Control	Control method		V/F control, slip compensation	
	Frequency settings power resolution		Digital command: 0.01Hz Analog command: 0.06 Hz (60 Hz standard)	
	Frequency accuracy		1% of maximum output frequency	
	V/F pattern		Linear, square reduction, user V/F	
	Overload capacity		Rated current: 150% 1 min	
	Torque boost		Manual torque boost, automatic torque boost	
Operation	Operation type		Select key pad, terminal strip, or communication operation	
	Frequency settings		Analog type: V1terminal 0–10 V, I2 terminal (Advanced I/O) 0–20 mA and 0–10 V Digital type: key pad input	
	Operation function		• Anti-forward and reverse direction rotation • Frequency jump • Frequency limit • DC braking • Jog operation • Up-down operation • 3-wire operation	• Dwell operation • Slip compensation • PID control • Energy saving operation • Speed search • Automatic restart
	Input	Multi-function terminal	Select PNP (Source) or NPN (Sink) mode. The function can be set depending on the parameter settings at In65–69 (advanced I/O) or In65–67 (standard I/O) codes.	

<table>
<tr><th colspan="3">Item</th><th colspan="2">Description</th></tr>
<tr><td rowspan="5">Operation</td><td rowspan="2">Input</td><td rowspan="2">Multi-function terminal</td><td>• Forward direction operation
• Reset
• Emergency stop
• Multi-step speed frequency-high/med/low
• DC braking during stop
• Frequency increase
• 3-wire
• Select acc/dec/stop</td><td>• Reverse direction operation
• External trip
• Jog operation
• Multi-step acc/dec-high/med/low
• Second motor selection
• Frequency reduction
• Fix analog command frequency
• Transition from PID to general operation</td></tr>
<tr><td rowspan="3">Output</td><td>Multi-function open collector terminal (standard I/O only)</td><td rowspan="2">Fault output and inverter operation status output</td><td>Less than DC 24 V, 50 mA</td></tr>
<tr><td>Multi-function relay terminal</td><td>Less than (N.O., N.C.) AC250V 1A, Less than DC 30V, 1A</td></tr>
<tr><td>Analog output</td><td colspan="2">0–10 Vdc: Select frequency, output current, output voltage, DC terminal voltage and others</td></tr>
<tr><td rowspan="3">Protection function</td><td colspan="2" rowspan="2">Trip</td><td>• Motor over heat trip
• Motor overload trip
• Output open-phase trip
• External signal trip
• Inverter overload trip
• Command loss trip
• Over current trip
• Inverter over heat
• Over voltage trip
• Ground trip</td><td>• COM trip
• Fan trip
• Low voltage trip
• Command loss trip</td></tr>
<tr><td colspan="2">Alarm</td><td colspan="2">Overload alarm</td></tr>
<tr><td colspan="2">Instantaneous blackout</td><td colspan="2">Less than15 ms: continue operation (must be within the rated input voltage and rated output range)
More than 15 ms: auto restart operation</td></tr>
</table>

Item		Description
Structure/ working environment	Cooling type	Natural cooling structure (0.1–0.2 kW) Forced fan cooling structure (0.4–2.2 kW)
	Protection structure	IP 20, UL Open Type
	Ambient temperature[1)]	-10–50℃ (14–122°F) (No ice or frost should be present.)
	Ambient humidity	Relative humidity less than 95% RH (to avoid condensation forming)
	Storage temperature	-20°C–65°C (- 4–149°F)
	Surrounding environment	Prevent contact with corrosive gases, inflammable gases, oil stains, dust, and other pollutants (Pollution Degree 2).
	Operation altitude/oscillation	No higher than 3280ft (1,000 m). Less than 9.8 m/sec2 (1G).
	Pressure	70–106 kPa

1) The 0.1 kW–0.2 kW products can be operated at a maximum of 50℃. However, the lifespan of the product may be reduced when operating continuously with a full load when the ambient temperature exceeds 40℃ (35℃ when an optional vent cover is installed).

12.3 External Dimensions (IP 20 Type)

0.1–0.2 kW (Single Phase)

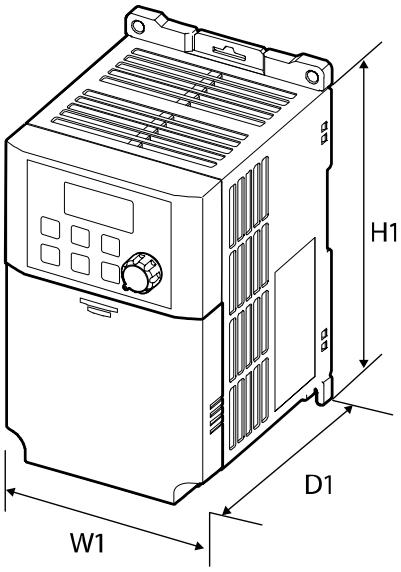

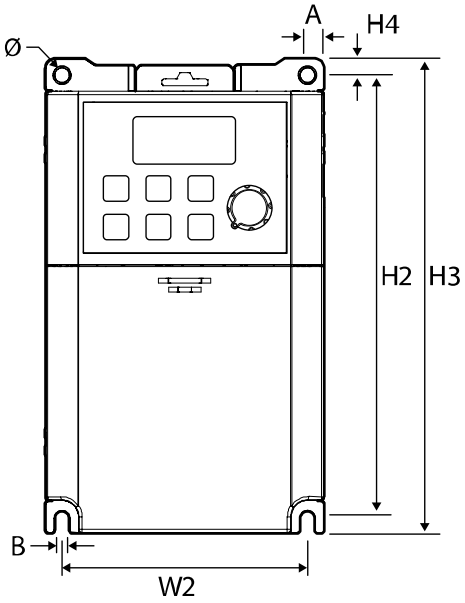

0.4–0.8 kW (Single Phase)

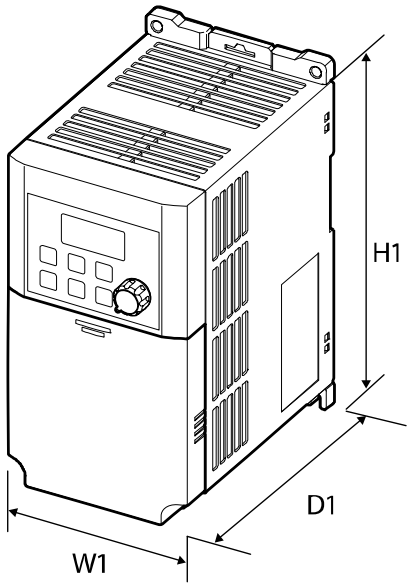

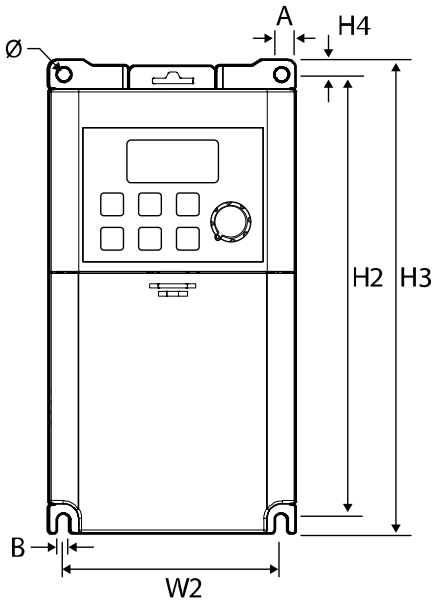

1.5–2.2 kW (Single Phase)

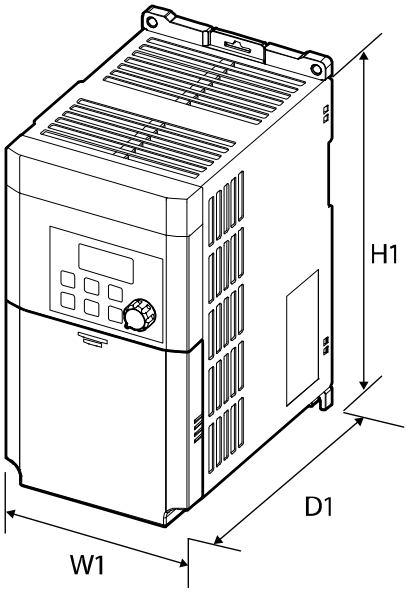

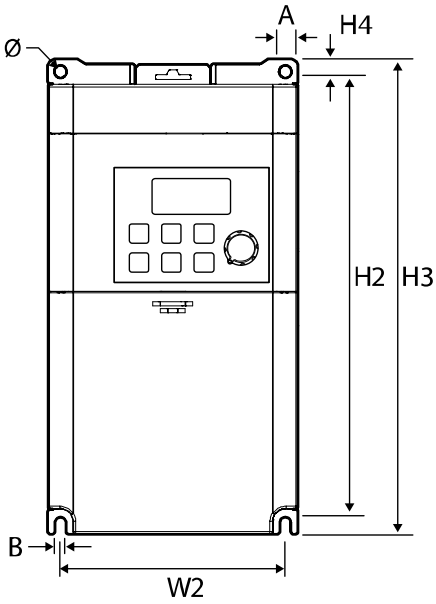

Items	W1	W2	H1	H2	H3	H4	D1	A	B	Φ

Items	W1	W2	H1	H2	H3	H4	D1	A	B	Φ
0001M100-1, 0002M100-1	85 (3.34)	75 (2.95)	135 (5.31)	135.5 (5.33)	145 (5.70)	5 (0.19)	100 (3.93)	5 (0.19)	4.5 (0.18)	4.5 (0.18)
0004M100-1, 0008M100-1	85 (3.34)	75 (2.95)	153 (6.02)	153.5 (6.04)	163 (6.42)	5 (0.19)	123 (4.84)	5 (0.19)	4.5 (0.18)	4.5 (0.18)
0015M100-1, 0022M100-1,	100 (3.94)	90 (3.54)	180 (7.08)	180.5 (7.10)	190 (7.48)	5 (0.19)	140 (5.51)	5 (0.19)	4.5 (0.18)	4.5 (0.18)

Unit: mm (inches)

12.4 Peripheral Devices

Compatible Circuit Breaker, Leakage Breaker), Magnetic Contactor) and Motor Circuit Breaker (MMS) Models (manufactured by LSIS)

Inverter Capacity	Circuit Breaker		Leakage Breaker		Magnetic Contactor		Motor Circuit Breaker (MMS)	
	Model	Rating [A]	Model	Rating [A]	Model	Rating [A]	Model	Rating [A]
0.1kW-1	UTE100 N	15	EBS33c	5	MC-6a	9	MMS-32H-1	1
0.2kW-1							MMS-32H-2.5	2.5
0.4kW-1							MMS-32H-6	6
0.8kW-1				10			MMS-32H-8	8
1.5kW-1				15	MC-18a, MC18b	18	MMS-32H-17	17
2.2kW-1		20		220	GMC-32	22	MMS-32H-32	32

12.5 Fuse and Reactor Specifications

Inverter capacity	AC Input Fuse		AC Reactor	
	Current [A]	Voltage[V]	Inductance [mH]	Current [A]
0.1kW-1	5	600	4.2	3.5
0.2kW-1				
0.4kW-1	10		1.2	10
0.8kW-1				
1.5kW-1	15		0.88	14
2.2kW-1	20		0.56	20

Caution

Only use Class H or RK5, UL listed input fuses and UL listed circuit breakers. See the table above for the voltage and current ratings for fuses and circuit breakers.

Attention

Utiliser UNIQUEMENT des fusibles d'entrée homologués de Classe H ou RK5 UL et des disjoncteurs UL. Se reporter au tableau ci-dessus pour la tension et le courant nominal des fusibless et des disjoncteurs.

12.6 Terminal Screw Specification

Input/Output Terminal Screw Specification

<table>
<tr><th colspan="2" rowspan="2">Product (kW)</th><th colspan="8">Terminal Screw Size</th><th rowspan="2">Screw Torque (Kgf·cm/Nm)</th></tr>
<tr><th>E</th><th>R</th><th>T</th><th>B1</th><th>B2</th><th>U</th><th>V</th><th>W</th></tr>
<tr><td rowspan="6">Single phase 200V</td><td>0.1</td><td colspan="8" rowspan="4">M3</td><td rowspan="6">M3–M3.5
2.1–5.0/0.2–0.5

M4
2.1–8.0/0.2–0.8</td></tr>
<tr><td>0.2</td></tr>
<tr><td>0.4</td></tr>
<tr><td>0.75</td></tr>
<tr><td>1.5</td><td colspan="4" rowspan="2">M4</td><td colspan="4" rowspan="2">M3.5</td></tr>
<tr><td>2.2</td></tr>
</table>

Control Circuit Terminal Screw Specification

Terminal	Terminal Screw Size	Screw Torque (Kgf·cm/Nm)
P1–P5/CM/VR/V1/I2/AO/Q1/EG/24[1)]	M2.6	4.0/0.4
A1/B1/C1/A2/C2[1)]		

1) P4, P5, I2, A2, and C2 terminals are unavailable when using the standard I/O. Q1 and EG terminals are unavailable when using the advanced I/O.
Refer to *2.2 Cable* Wiring *Step 4 Control Terminal Wiring* on page *24*.

Caution

Apply rated torques to the terminal screws. Loose screws may cause short circuits and malfunctions. Tightening the screw too much may damage the terminals and cause short circuits and malfuctions. Use copper wires only with 600V, 75℃ rating for the power terminal wiring, and 300V, 75℃ rating for the control terminal wiring.

Attention

Appliquer des couples de marche aux vis des bornes. Des vis desserrées peuvent provoquer des courts-circuits et des dysfonctionnements. Ne pas trop serrer la vis, car cela risque d'endommager les bornes et de provoquer des courts-circuits et des dysfonctionnements. Utiliser uniquement des fils de cuivre avec une valeur nominale de 600 V, 75 ℃ pour le câblage de la borne d'alimentation, et une valeur nominale de 300 V, 75 ℃ pour le câblage de la borne de commande.

12.7 Braking Resistor Specification

Product (kW)	Resistance (Ω)	Rated Capacity (W)
1.5	60	300
2.2	50	400

The standard for braking torque is 150% and the working rate (%ED) is 5%. If the working rate is 10%, the rated capacity for braking resistance must be calculated at twice the standard.

12.8 Continuous Rated Current Derating

Derating by Carrier Frequency

The continuous rated current of the inverter is limited based on the carrier frequency. Refer to the following graph.

Frame A (0.1kW-1, 0.2kW-1)		Frame B/C (0.4kW-1–2.2kW-1)	
Carrier Frequency (kHz)	Constant-rated Current (%)	Carrier Frequency (kHz)	Constant-rated Current (%)
1–4	100	1–6	100
8	88	8	88
12	77	12	77
15	72	15	72

[Frame A (0.1kW-1, 0.2kW-1)]

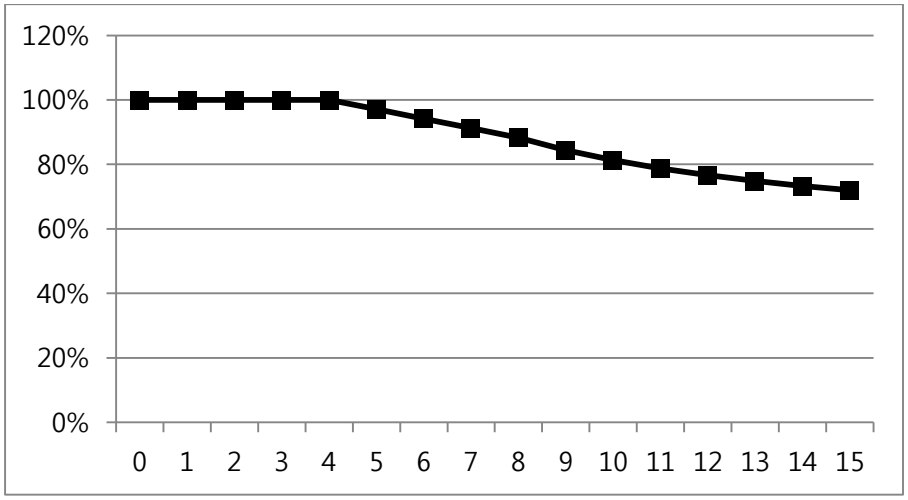

The 0.1 kW–0.2 kW products can be operated at a maximum of 50℃. However, the lifespan of the product may be reduced when operating continuously with a full load when the ambient temperature exceeds 40℃ (35℃ when an optional vent cover is installed).

[Frame B/C (0.4kW-1–2.2kW-1)]

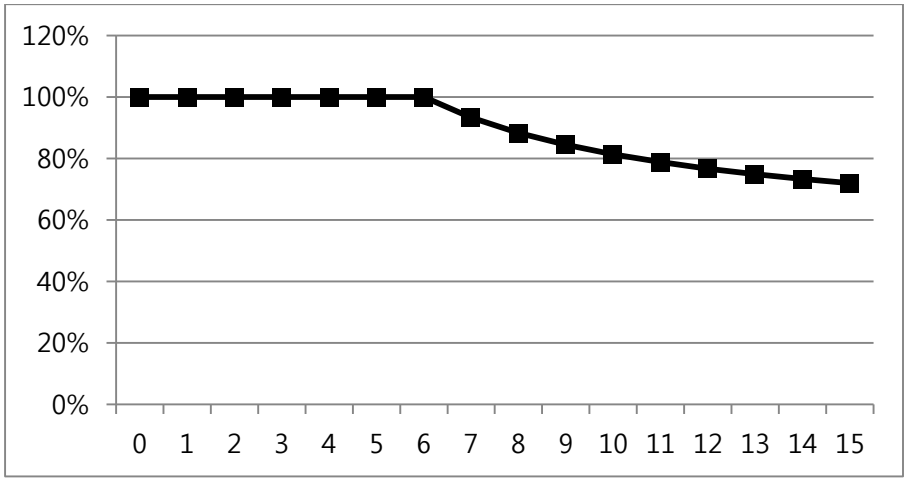

If the ambient temperature is high, and if the maximum carrier frequency for continuous full load conditions (4 kHz for A Frame 0.1 kW-1/0.2 kW-1 products, 6 kHz for B/C Frame 0.4 kW-1 – 2.2 kW-1 products) is exceeded, a protective feature may be activated to limit the carrier frequency (to 4 kHz / 6 kHz) to prevent damages to the product.

The protective feature will be deactivated and the user-configured carrier frequency will be used again when the internal temperature becomes low enough for reliable operation.

Before operating the product with a high carrier frequency, refer to the table above to ensure that the carrier frequency is appropriately set for reliable operation at continuous full load conditions(%).

Derating by Input Voltage

The continuous rated current of the inverter is limited based on the input voltage. Refer to the following graph.

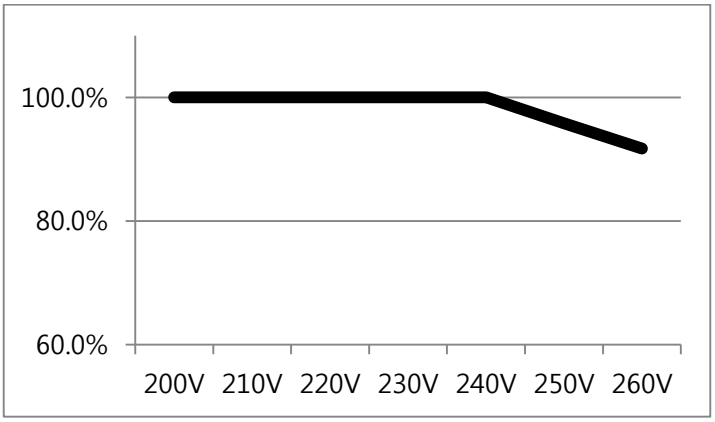

Input voltage	200V	210V	220V	230V	240V	250V	264V
Constant-rated current	100.0%	100.0%	100.0%	100.0%	100.0%	95.8%	90.0%

Derating by Ambient Temperature and Installation Type

The constant-rated current of the inverter is limited based on the ambient temperature and installation type. Refer to the following graph.

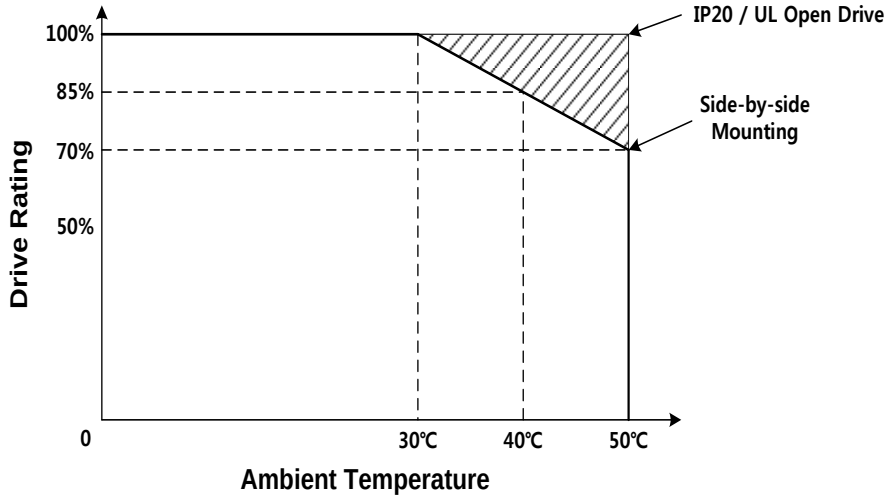

12.9 Remote Keypad Option

The option consists of a remote keypad and cables (1M, 2M, 3M, 5M).

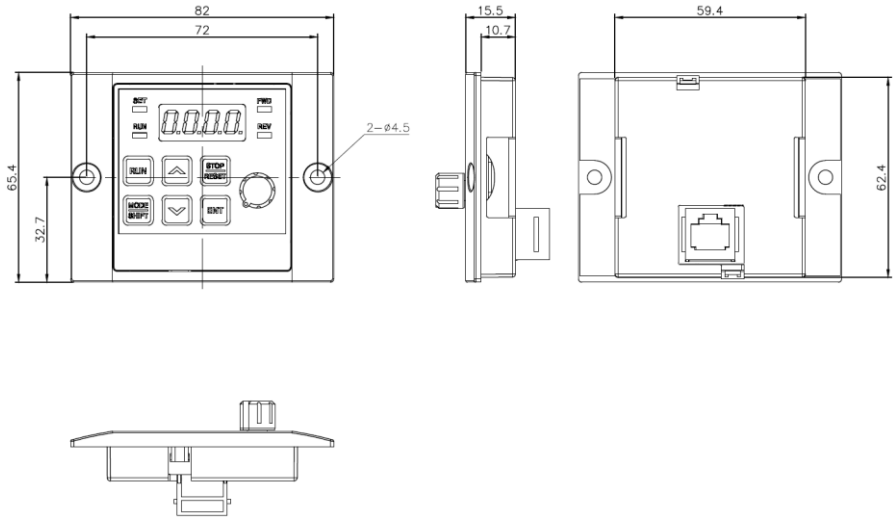

Unit: mm

Installation

1 Remove the remote keypad cable connection hole and then connect the cable of the remote keypad to the I/O RJ45 connector.

2 Connect the other end of the cable to the remote keypad.

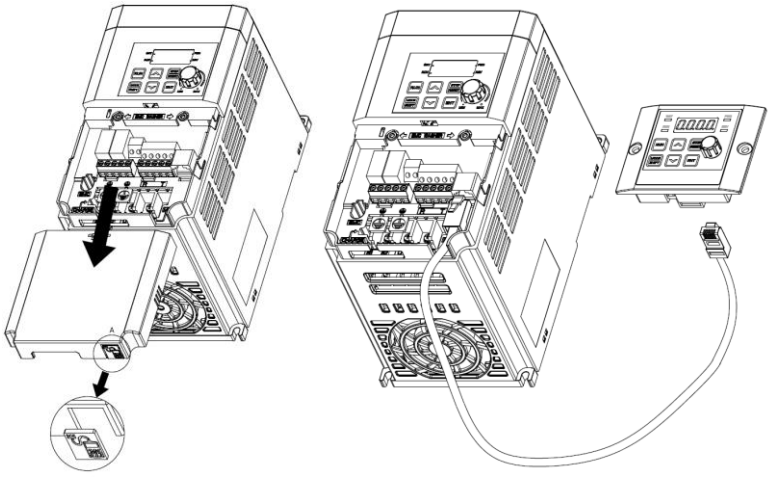

How to use

1 When connecting the remote keypad, the key and potentiometer on the inverter keypad are ignored and replaced by the key and potentiometer on the remote keypad.

- Dismount the remote keypad and 2 seconds later, it will return to the original position with the key and potemtiometer on the inverter keypad.

(If the frequency reference source set to potentiometer, at the time of mounting and dismounting, the command frequency is instantly switched between the inverter keypad potentiometer and the remote keypad potemtiometer. Be careful that the motor does not rotate at an unintended frequency.)

- If communication between the inverter and the remote keypad is not established, "E.vEr" is displayed on the remote keypad 7-Seg.

2 With the remote keypad connected to the inverter, parameter settings saved in the inverter can be copied to the remote keypad by setting the dr 85 to 1.

- "R-UL" is displayed on the 7-Seg keypad during upload. When the save is complete, the text disappears and the main screen is displayed.

- If there is an error such as communication error during upload, "FAIL" warning message will be displayed for 3 seconds and the operation to save the parameter on the remote keypad will fail.

3 With the remote keypad connected to the other inverter of same series, parameter settings saved in the remote keypad can be copied to the inverter by setting the dr 86 to 1.

- "W-dL" is displayed on the 7-Seg keypad during saving. When the save is complete, the text disappears and the main screen is displayed.

- At this time, if the model name of the inverter is wrong or the version of the parameter code of the inverter is wrong or if an error such as remote keypad communication error occurs, a warning message "FAIL" is displayed for 3 seconds and the parameter is set to inverter Will fail.

Product Warranty

Warranty Information

Fill in this warranty information form and keep this page for future reference or when warranty service may be required.

Product Name	LSIS Standard Inverter	**Date of Installation**	
Model Name	LSLV-M100	**Warranty Period**	
Customer Info	Name (or company)		
	Address		
	Contact Info.		
Retailer Info	Name (or company)		
	Address		
	Contact Info.		

Warranty Period

The product warranty covers product malfunctions, under normal operating conditions, for 12 months from the date of installation. If the date of installation is unknown, the product warranty is valid for 18 months from the date of manufacturing. Please note that the product warranty terms may vary depending on purchase or installation contracts.

Warranty Service Information

During the product warranty period, warranty service (free of charge) is provided for product malfunctions caused under normal operating conditions. For warranty service, contact an official LSIS agent or service center.

Non-Warranty Service

A service fee will be incurred for malfunctions in the following cases:

- intentional abuse or negligence
- power supply problems or from other appliances being connected to the product
- acts of nature (fire, flood, earthquake, gas accidents etc.)
- modifications or repair by unauthorized persons
- missing authentic LSIS rating plates
- expired warranty period

Visit Our Website

Visit us at ***http://www.lsis.com*** for detailed service information.

EC DECLARATION OF CONFORMITY

We, the undersigned,

Representative: **LSIS Co., Ltd.**
Address: **LS Tower, 127, LS-ro, Dongan-gu, Anyang-si, Gyeonggi-do, Korea**

Manufacturer: **LSIS Co., Ltd.**
Address: **56, Samseong 4-gil, Mokcheon-eup, Dongnam-gu, Cheonan-si, Chungcheongnam-do, Korea**

Certify and declare under our sole responsibility that the following apparatus:

Type of Equipment: **Inverter (Power Conversion Equipment)**

Model Name: **LSLV-M100 series**

Trade Mark: **LSIS Co., Ltd.**

Conforms with the essential requirements of the directives:

2014/35/EU Directive of the European Parliament and of the Council on the harmonisation of the laws of the Member States relating to the making available on the market of electrical equipment designed for use within certain voltage limits.

2014/30/EU Directive of the European Parliament and of the Council on the harmonisation of the laws of the Member States relating to electromagnetic compatibility.

2011/65/EU Directive on the restriction of the use certain of certain Hazardous Substances in electrical and electronic equipment -RoHs.-

LGAI TECNOLOGICAL CENTER is Notified Body nº 370, signs the certified number 0370-EMC-0098.

Based on the following specifications applied:

EN 61800-3:2004/A1:2012
EN 61800-5-1:2007
2011/65/EU

and therefore, complies with the essential requirements and provisions of the 2014/35/CE ,2014/30/CE and 2011/65/CE Directives.

Place: **Chonan, Chungnam,**
Korea

문 상 천 2017. 7. 25 (Signature, Date)

Mr. Sang Chun Moon / General Manager
(Full name / Position)

UL mark

The UL mark applies to products in the United States and Canada. This mark indicates that UL has tested and evaluated the products and determined that the products satisfy the UL standards for product safety. If a product received UL certification, this means that all components inside the product had been certified for UL standards as well.

CE mark

The CE mark indicates that the products carrying this mark comply with European safety and environmental regulations. European standards include the Machinery Directive for machine manufacturers, the Low Voltage Directive for electronics manufacturers and the EMC guidelines for safe noise control.

Low Voltage Directive

We have confirmed that our products comply with the Low Voltage Directive (EN 61800-5-1).

EMC Directive

The Directive defines the requirements for immunity and emissions of electrical equipment used within the European Union. The EMC product standard (EN 61800-3) covers requirements stated for drives.

Index

2

24 terminal 28

3

3-Wire Operation 116

4

4-pole standard motor 235

7

7-segment display 40
  letters 40
  numbers 40

A

A1/C1/B1 terminal 28
Acc/Dec pattern 91
  linear pattern 91
Acc/Dec stop 94
Acc/Dec time
  configuration via multi-function terminal ... 88
  maximum frequency 86
  operation frequency 87
analog input 42
analog output 42
  AO terminal 28
analog output 28
Analog Output 142
AO terminal 28
ASCII code 182
asynchronous communications system 171
auto restart settings 129
auto torque boost 100

B

basic operation 39
brake resistor 23
braking resistor
  braking resistor specification 242
  braking torque 242
broadcast 178

C

cable 11
  selection 11
Cable
  Ground Specifications 11
  Power I/O Cable Specifications 11
carrier frequency
  derating 242
charge indicator 217, 222
cleaning 229
CM terminal 27
Command source
  RS-485 83
common terminal ..... Refer to *EG terminal*
communication 171
  command loss protective operation 175
  communication address 183
  communication line connection 173
  communication parameters 173
  communication speed 174
  communication standards 171
  illustration of the system configuration 172
  PLC 171
  protocol 176
compatible common area parameter 186
config mode(CNF) 157
Considerations for the installation
  Air Pressure 6
  Altitude/Vibration 6
  Ambient Humidity 6
  Environmental Factors 6
Considerations for the installation
  Ambient Temperature 6
customer service center 217

D

DC braking after stop 101, 107
DC braking frequency 107
derating 242, 246

disposal 229, 233
Dwell Operation..... 117

E

earth leakage breaker.....226
EG terminal 28
EMC filter
asymmetric power 32
Enclosed Type 1 238
energy saving operation 126
error code.....181
FE(frame error) 181
IA(illegal data address) 181
ID(illegal data value) 181
IF(illegal function) 181
WM(write mode error).....181
ESC key 41
external 24 V power terminal ..... Refer to *24 terminal*

F

factory default 54
fatal.....217
fault
fatal.....217
latch 217
level 217
trip.....218
fault signal output terminal .....Refer to *A1/C1/B1 terminal*
FE(frame error) 181
free run stop.....102
frequency jump 104
frequency limit 103
frequency jump 104
frequency upper and lower limit value.....103
maximum/start frequency 103
frequency setting
keypad.....68
variable resistor 54
frequency setting(voltage) terminal ...Refer to *V1 terminal*
fuse 241

G

ground 20
ground terminal 20
Ground
Ground Cable Specifications..... 11
Ground Trip
ground fault trip.....218

H

half duplex system 171

I

I2
frequency setting(current/voltage) terminal 27
I2 terminal..... 27
I2 terminal
analog input selection switch (SW2) 27
IA(illegal data address) 181
ID(illegal data value).....181
IF(illegal function).....181
Input and Output Specification.....235
input terminal 27
CM terminal 27
I2 terminal..... 27
P1–P7 terminal 27
V1 terminal 27
VR terminal 27
inspection
annual inspection.....230
bi-annual inspection.....232
daily inspections.....229
installation
wiring 18
installation considerations..... 6
Installation considerations..... 6
inverse time-limit thermal characteristics 218
IP 20 238

J

Jog Operation 110
FWD Jog.....110
jump frequency 105

K

keypad 39
  display 39
keypad display 40
keypad key
  [ESC] key 41
  [RUN] key 41
  [STOP/RESET] key 41

L

latch 217
LCD loader config mode (CNF) 157
leakage breaker 240
level 217
lift-type load 98, 117, 118
linear pattern 91
locating the installation site 7
  location 7
LS INV 485 protocol 176

M

magnetic contactor 24, 240
maintenance 229
manual torque boost 98
Master 172
megger test 230, 232
Modbus-RTU protocol 183
monitor
  monitor registration protocol details 180
  Operation State Monitor 151
motor output voltage adjustment 97
motor rotational direction 37
multi-drop Link System 171
multi-function key 40
multi-function terminal 27

N

NPN mode (Sink) 31

O

operation noise 130
  frequency jump 104
output/communication
  24 terminal 28
  EG terminal 28
  S+/S-/SG terminal 28
output/communication terminal
  A1/C1/B1 terminal 28
  AO terminal 28
  Q1 terminal 28

P

P1~P7 ..... *multi-function input terminal*
parameter 48
  initialization 136
  parameter setting 48
part names 3
parts illustrated 3
peripheral devices 240
phase-to-phase voltage 224
PID control 121
  configuration 121
  integral time(PID I-Time) 123
PLC 171
PNP mode (Source) 31
PNP/NPN mode selection switch (SW1)
  PNP mode (Source) 31
PNP/NPN mode selection switch(SW1)
  NPN mode (Sink) 31
power terminal
  P2+/B terminal 23
  U/V/W terminals 23
power terminals
  R/T terminals 23
protocol 176
  LS INV 485 protocol 176
  Modbus-RTU protocol 183

Q

Q1 terminal 28

R

R/S/T terminals 222
R/T terminals 23
rated
  braking resistance rated capacity 242
  derating 242, 246
rating 235

rated input 235
rated output 235
rated slip frequency 120
refer to Modbus-RTU Protocol ..... Modbus-RTU Protocol
resonance frequency
carrier frequency 130
RS-232 172
communication 172
converter 172
RS-485
communication 172
converter 172
signal terminal 28
RS-485 signal input terminal.. Refer to *S+/S-/SG terminal* , Refer to *S+/S-/SG terminal*

S

S+/S-/SG terminal 28
safety information ii
screw specification 241
control circuit terminal screw 241
input/output terminal screw 241
screw size 241
screw torque 241
sequence common terminal ..... Refer to *CM terminal*
serge killer 34
side by side 245, 247
Slave 172
slip compensation operation 119
Square reduction
V/F pattern Operation 96
stop mode 101
DC braking after stop 101, 107
deceleration stop 101
free run stop 102
storage 232
Storing Temperature 6
surge killer 24
SW1 ..... Refer to *PNP/NPN mode selection switch(SW1)*, Refer to *PNP/NPN mode selection switch(SW1)*
SW2 ..... Refer to *analog input selection switch (SW2)*
SW3 ..... Refer to *analog output selection switch(SW3)*
switch 25

T

technical specification
specification details 236
terminal for frequency reference setting..Refer to *VR terminal*
torque boost 98
auto torque boost 100
manual torque boost 98
overexcitation 99
trip 156, 217
fault trips 218
trip condition monitor 58
troubleshooting fault trips 220
troubleshooting
other faults 222
troubleshooting fault trips 220

U

U/V/W terminals 23, 222
Unipolar (unipolar power source) 27
update 180
Up-Down Operation 112
user V/F pattern operation 96
using the keypad 43
using the using the keypad
parameter setting 48

V

V/F control 95
Square reductionV/F pattern Operation 96
user V/F pattern operation 96
V1 terminal 27
V2 input
analog input selection switch(SW2) 27
variable resistor 54
variable torque load 96
VR terminal 27

W

warning 217
wiring 18
circuit breaker 240

ground 20
WM(write mode error)..... 181