Thank you for using our **S100 PROFInet option module**

Safety PRECAUTIONS

- Always follow safety instructions to prevent accidents and potential hazards from occurring.
- Safety precautions are classified into “WARNING” and “CAUTION” and their meanings are as follows:

⚠ **WARNING** Improper operation may result in serious personal injury or death.

⚠ **CAUTION** Improper operation may result in slight to medium personal injury or property damage

- The indicated illustrations on the product and in the manual have the following meanings.

⚠ Danger may be present. Read the message and follow the instructions carefully.

⚠ Particular attention should be paid because danger of an electric shock may be present.

- Keep operating instructions handy for quick reference.
- Read the operating instructions carefully to fully understand the functions of the S100 series and to use it properly.

⚠ CAUTION

- **Be cautious, when handling the CMOS components of the communication module.**
  Static may lead to malfunctioning of the product.
- **Turn off the inverter power, when changing the communication cable.**
  Otherwise, you may damage the module or a communication error may occur.
- **Make sure to insert the Communication module connector to the inverter precisely.**
  Otherwise, you may damage the module or a communication error may occur.
- **Check the parameter unit before setting up the parameter.**
  Otherwise, a communication error may occur.

Table of Contents

1 About the Product 1

1.1 PROFInet Technical Features 1
1.2 Included Items 1
1.3 GSDML File 1

2 Part Names and Installation 2

2.1 Exterior 2
2.2 Installation 2
2.3 PROFInet Communication Module Front Panel 5

3 Network Connections 7

3.1 Network Cable Contacts 7
3.2 Communication Cable Connector 7
3.3 Network Cable Specification 7

4 PROFInet Communication Related Keypad Parameters 8

5 Keypad Parameters Related to PROFInet Communication Module 10

5.1 CNF Group 10
5.2 DRV Group 10
5.3 COM Group 11
5.4 PRT Group 13

6 PROFIdrive Status Diagram 14

7 Supported PROFIdrive Cyclic Telegram 16

7.1 Standard Telegram (Mode : 0) 16
7.2 Vendor Specific Telegram (Mode : 1) 16

8 Supported PROFIdrive Parameters 22

9 Fault Message Counter (PNU[944]) and Fault Number (PNU[947]) 24

10 Accessing the S100 Common Parameters using the PROFIdrive Parameters 28

11 Accessing S100 Inverter Parameters using the PROFInet Record Data Object 30

12 Processing the Alarms 31

13 Trouble Shooting 32

1 About the Product

The LSIS S100 PROFInet communication module (model CJ-S7M1) provides PROFInet network communication for the LV-S100 inverter. PROFInet is a communication protocol compliant with IEC 61158 Type 10. The PROFInet communication module provides full-duplex data transfer which enables real-time communication without transmission collisions. Using a PROFInet connection, the S100 inverter can be controlled and monitored via a PLC sequence program or any master PLC module. In addition, PROFInet is easy to connect, enabling faster installation and easier maintenance.

1.1 PROFInet Technical Features

Item	Description
Communication protocol	PROFInet IO CC-A
Communication speed	100 Mbps
Communication type	Full Duplex
Distance	100m (Twisted Pair)
Max. number of Node	64 ea
Service	PROFIdrive Class 1
Topology	Line, Tree, Star topology

1.2 Included Items

This product is consisting of these kinds of parts.
- PROFInet Communication Module board (CPNT- S100): 1 ea
- PROFInet Module manual: 1 ea
- Brass Bar(M3xL23): 1 ea
- Brass Bar(M3xL17.3): 1 ea
- Fixed Screw(M3xL8): 2 ea

1.3 GSDML File

The GSDML file contains information about the PROFInet communication module installed in an inverter. When you configure the PROFInet network, the network configuration software requires the GSDML file.

** You can download the file from http://www.lsis.co.kr/.

2 Part Names and Installation

2.1 Exterior

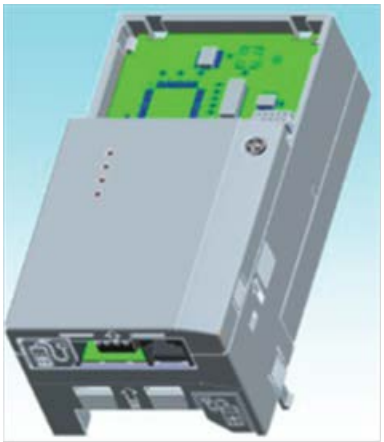

2.2 Installation

Warning) Connect a communication network after the power supply is off. If PROFInet communication module is removed or installed, the power supply should be switched off. Otherwise, the S100 inverter will be damaged entirely.

Take off PROFInet communication module from the product after the power supply is totally discharged.

- Unfasten the front cover fixing bolt to remove the front cover and remove I/O cover((1), (2)) from a dedicated S100 inverter for communication.

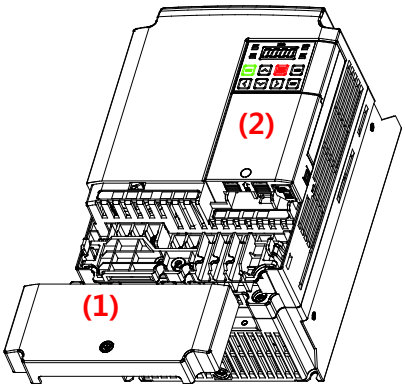

■ Remove the keypad (3).

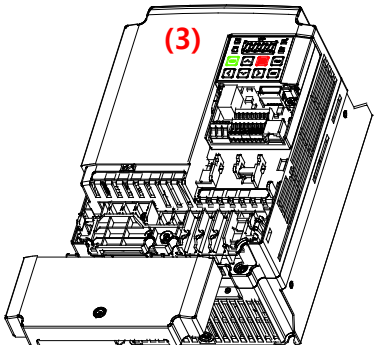

■ Unfasten a screw from I/O board and fasten the prepared brass bar(4).

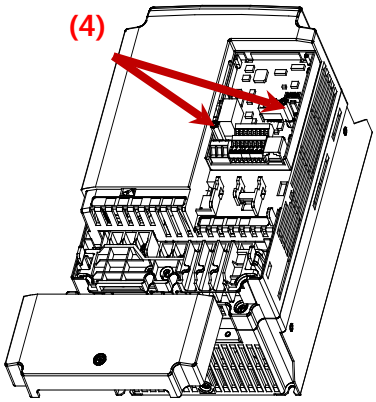

■ Mount PROFInet communication Module and fasten the removed screw(6) and the included screw(7).

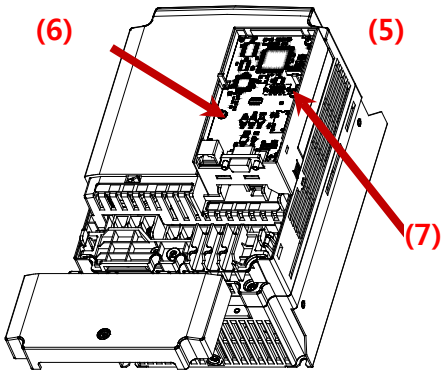

■ Install the keypad (8) at first and the communication module cover(9) in order.

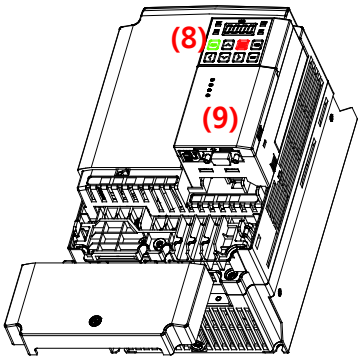

■ Install the front cover(10) again And installation is completed.

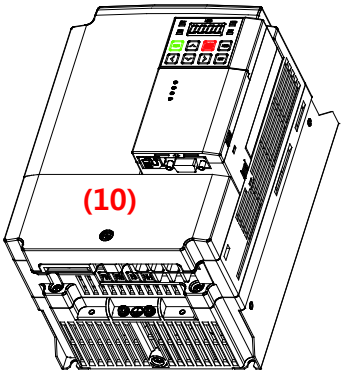

2.3 PROFInet Communication Module Front Panel

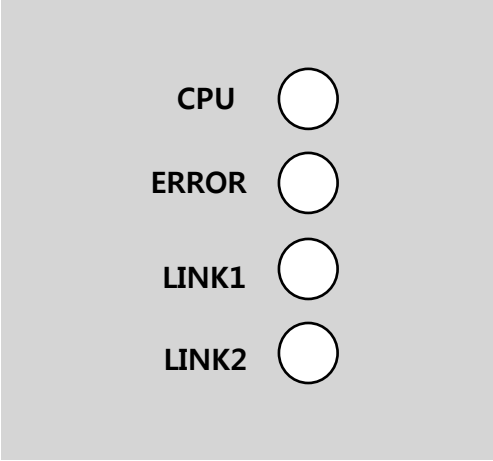

Indicator	Color	Description	Status	Remarks
CPU	Green	Abnormal operation	ON	The CPU is not operating.
			OFF	
		Normal operation	Flashing (1 second intervals)	The communication module is installed correctly in the inverter.
ERROR	Red	Normal operation	OFF	Communication between the communication module and the inverter is normal.
		Communication fault	CPU and ERROR indicators flash simultaneously	Communication error occurred between the communication module and the inverter
			CPU and ERROR indicators flash asynchronously, in 2 second intervals	Abnormal communication conditions exist between the communication module and the

Indicator	Color	Description	Status	Remarks
				inverter.
			ON	The communication module failed to boot up.
LINK1/ACT1	Green	Normal operation	ON	LINK1 is connected to a network.
			OFF	LINK1 is not connected to a network
	Yellow	Normal operation	OFF	Network LINK1 is not transmitting/receiving data
			Flashing	Data transmission between the Master unit and the communication module is in progress at network LINK1.
LINK2/ACT2	Green	Normal operation	ON	LINK2 is connected to a network.
			OFF	LINK2 is not connected to a network
	Yellow	Normal operation	OFF	Network LINK1 is not transmitting/receiving data
			Flashing	Data transmission between the master unit and the communication module is in progress at network LINK2.

AKSA OTOMASYON

3 Network Connections

3.1 Network Cable Contacts

Pin No.	Signal	Description	Cable Color
1	TX+	Data Transmission (+)	White/Yellow
2	TX-	Data Transmission (-)	Yellow
3	RX+	Data Reception (+)	White/Green
4	NONE	Not Used	Blue
5	NONE	Not Used	White/Blue
6	RX-	Data Reception (-)	Green
7	NONE	Not Used	White/Brown
8	NONE	Not Used	Brown

3.2 Communication Cable Connector

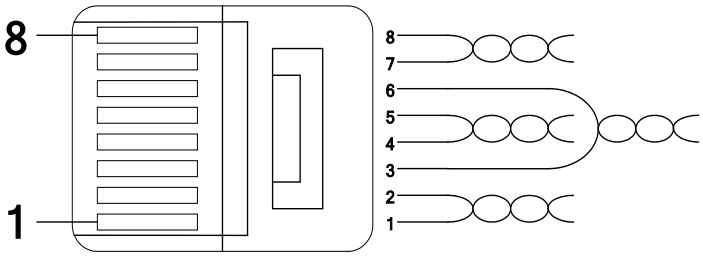

** Wires connected to pin #1 and pin #2 must be twisted.
** Wires connected to pin #3 and pin #6 must be twisted.

3.3 Network Cable Specification

PROFInet network communication requires STP (category 6a, or higher) network cables.

4 PROFInet Communication Related Keypad Parameters

To operate an S100 inverter using the PROFInet communication module, set DRV-06 (Cmd Source) to [4 Fieldbus]. Set DRV-07 (Freq Ref Src) to [8 Fieldbus] to provide a frequency reference to the inverter using the PROFInet communication module.

Code	Parameter Name	Default	Description	
CNF	30 Option-1 Type	-	When the S100 PROFInet communication module is installed, the module type “PROFInet” is automatically detected and displayed. Note 1)	
DRV	06 Cmd Source	1 Fx/Rx-1	0	Keypad
			1	Fx/Rx-1
			2	Fx/Rx-2
			3	Int 485
			4	Fieldbus
			5	UserSeqLink
	07 Freq Ref Src	0 Keypad-1	0	Keypad-1
			1	Keypad-2
			2	V1
			4	V2
			5	I2
			6	Int 485
			8	FieldBus
			9	UserSeqLink
			12	Pulse
COM	06 FBus S/W Ver	-	-	
	09 FBus Led	-	-	
	10 opt para-1	0	IP - 1	
	11 opt para-2	0	IP – 2	

	12 opt para-3	0	IP – 3	
	13 opt para-4	0	IP - 4	
	14 opt para-5	0	Subnet Mask - 1	
	15 opt para-6	0	Subnet Mask - 2	
	16 opt para-7	0	Subnet Mask – 3	
	17 opt para-8	0	Subnet Mask - 4	
	18 opt para-9	0	Gateway - 1	
	19 opt para-10	0	Gateway - 2	
	20 opt para-11	0	Gateway - 3	
	21 opt para-12	0	Gateway - 4	
	22 opt para-13	0	Mode (0:STD Telegram1, 1: Vendor Specific Telegram)	
PRT	12 Lost Cmd Source	0 None	0	None
			1	Free-Run
			2	Dec
			3	Hold Input
			4	Hold Output
			5	Lost Preset
	13 Lost Cmd Time	1.0	0.1–120 [s]	
	14 Lost Preset F	0.00	0.50–60.00 [Hz]	

5 Keypad Parameters Related to PROFInet Communication Module

5.1 CNF Group

5.1.1 [CNF-30] Option-1 Type: the type of device installed in the module slot 1

Automatically detects and displays the type of communication module installed. “PROFInet” is displayed when a PROFInet communication module is installed in the S100 inverter.

5.2 DRV Group

5.2.1 [DRV-06] Cmd Source: Command Source Selection

Selects the command source for the S100 inverter. Set the parameter to [4 FieldBus] to set PROFInet communication as the command source.

5.2.2 [DRV-07] Freq Ref Src: Frequency Reference Source Selection

Selects the frequency reference source for the S100 inverter. Set the parameter to [8 FieldBus] to set PROFInet communication as the frequency reference source.

5.3 COM Group

5.3.1 [COM-06] FBus S/W Ver: Communication Module Software Version

Automatically detects and displays the software version of the currently installed communication module.

5.3.2 [COM-09] FBus LED: Communication Module Status Indicator (LED) Information

Displays the communication module's status indicator (LED) information on the inverter's keypad. For more information, refer to ***<2 Part Names and Installation>***.

An example of "[COM-09] FBus" LED status displayed on the keypad

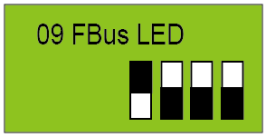

Indicator Name	LINK1/ACT1	LINK2/ACT2	ERR	CPU
Status	OFF	ON	ON	ON

5.3.3 [COM-10–21] IP Address, Subnet Mask, Gateway Settings

The S100 PROFInet communication module supports IPv4 protocol. All addresses and masks are expressed with four decimal numbers between 0 and 255, each separated by a dot (xxx.xxx.xxx.xxx). A PLC can forcibly reset the IP address by sending a DCP packet.

For example, when programming a PLC in Siemens TIA, you can select **Set IP address in the project (1)** to allow the PLC to send a DCP packet to a communication module to set an IP address. If you select **IP address is set directly at the device** (2), the PLC reads the IP address set at the communication module and uses it for PROFInet network communication, instead of resetting the IP.

5.3.4 [COM-22] Telegram Mode Settings

The S100 PROFInet Communication module supports two different types of telegrams. Refer to ***<7 Supported PROFIdrive Cyclic Telegram>*** for the supported telegram types and the details.

Setting	Selected Telegram Type
0	Standard Telegram
1	Vendor Specific Telegram

5.3.5 [COM-94] Comm Update

Press Yes to reflect the values setup with keypad on the PROFInet option.

5.4 PRT Group

5.4.1 [PRT-12] Lost Cmd Mode: Lost Command Mode Options

Select the inverter's operation mode for a "Lost Command" condition caused by a communication error.

The following table lists available operation modes.

Settings		Description
0	None	Speed reference becomes the operating frequency, without a protective operation.
1	Free-Run	The inverter cuts off the output and the motor free-runs.
2	Dec	The inverter performs a deceleration stop according to the time set at "Trip Dec Time."
3	Hold Input	The inverter keeps operating using the speed reference received before the command loss.
4	Hold Output	The inverter keeps operating using the operation frequency it was operating at before the command loss.
5	Lost Preset	The inverter operates using the frequency reference set at Pr-14 "Lost Preset F."

5.4.2 [PRT-13] Lost Cmd Time: Lost Command Decision Time

Sets the time taken for the inverter to decide that a command has been lost, and apply the "Lost Command Modes" set at [PRT-12]. The setting range is from 0.1–120 seconds.

5.4.3 [PRT-14] Lost Preset F: Frequency Reference for Lost Command

Sets a protective function that allows the inverter to run at a frequency reference that is pre-set at [PRT-14], when command via the communication module is lost. The setting range is between the start frequency and the maximum frequency [Hz].

6 PROFIdrive Status Diagram

The following diagram shows the operation status that the PROFInet communication module uses.

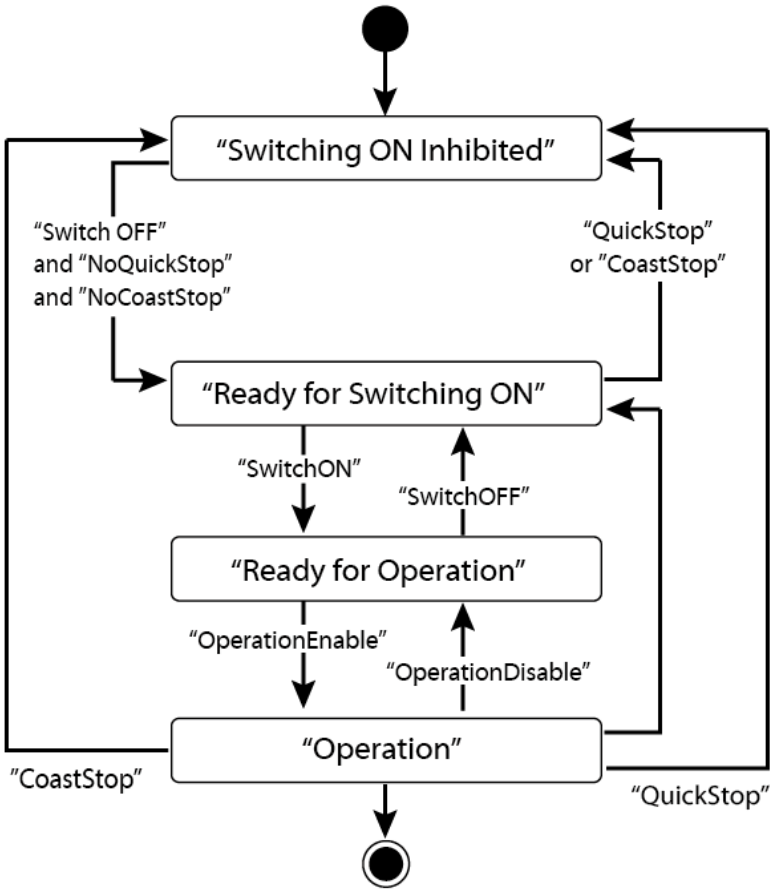

Status	Description
S1: Switching On Inhibited	The communication module cannot be switched ON at the moment.
S2: Ready For Switching On	The communication module can be switched ON at any moment.
S3: Ready For Operation	Communication module operation is ready to be enabled.
S4: Operation enable	The motor is running.

Status transitions are directed by the commands that are periodically transmitted from

the PLC, and the command types are as follows. Refer to ***<7.2.1 Control word (STW1)>*** for more information.

- NoQuickStop Command
- NoCoastStop Command
- SwitchOFF Command
- SwitchON Command
- OperationEnable Command
- OperationDisable Command
- QuickStop Command
- CoastStop Command

The following table lists status transition events and the inverter operations:

Source Status	Target Status	Event	Action (Inverter operation)
“Switch On Inhibited”	“Ready For Switching On”	"SwitchOFF" and "NoQuickStop" and "NoCoastStop"	None (Motor is stopped.)
“Ready For Switching On”	“Switch On Inhibited”	"QuickStop" or "CoastStop"	None (Motor is stopped.)
“Ready For Switching On”	“Ready For Operation”	"SwitchON"	None (Motor is stopped.)
“Ready For Operation”	“Ready For Switching On”	"SwitchOFF"	None (Motor is stopped.)
“Ready For Operation”	“Operation”	"OperationEnable"	Motor is run.
“Operation”	“Ready For Operation”	"OperationDisable"	Motor is stopped (the S100 inverter stops the motor according to the ADV-8 “Stop Mode” settings).
“Operation”	“Switch On Inhibited”	"CoastStop"	Motor is stopped (Free Run Stop).
“Operation”	“Switch On Inhibited”	"QuickStop"	Motor is stopped (the S100 inverter stops the motor according to the ADV-8 “Stop Mode” settings).

7 Supported PROFIdrive Cyclic Telegram

The S100 communication module supports “Standard” and “Vendor Specific” telegrams. On a PROFInet network, it can exchange cyclic telegrams with a PLC, at a minimum cycle time of 8 ms. Each telegram is expressed as a submodule in PROFInet network communication, and can be assigned to either Slot1 or Subslot 2 at the communication module.

7.1 Standard Telegram (Mode : 0)

Standard telegram1	Byte 1-2	Byte 3-4
PLC to S100	Control word (STW1)	Setpoint value
S100 to PLC	Status word (ZSW1)	Actual speed value

7.2 Vendor Specific Telegram (Mode : 1)

Vendor Specific telegram1	Byte 1-2	Byte 3-4	Byte 5-6	Byte 7-8	Byte 9-10
PLC to S100	Control word (STW1)	Setpoint value	Dummy	Dummy	Dummy
S100 to PLC	Status word (ZSW1)	Actual speed value	Alarm Info	Torque	Current

The following table lists settings for Standard and Vendor Specific Telegrams.

7.2.1 Control word (STW1)

Bit	Name	Value	Description
0	ON	1	Ready for operation (Operation by a PLC is available.)
	OFF1	0	NOT Ready for operation (Operation by a PLC is not available.)
1	No OFF2	1	OFF2 (Coast Stop) feature is disabled. Current operation is maintained.
	OFF2 (Coast Stop)	0	Stops the motor using a free-run stop (emergency stop).
2	No OFF3	1	OFF3 (Quick Stop) feature is disabled. Current operation is maintained.

Bit	Name	Value	Description
	OFF3 (Quick Stop)	0	Stops the motor using the setting at S100 inverter (ADV-8 “Stop Mode”).
3	Enable Operation	1	Operates the motor using the Setpoint value (frequency reference received from a PLC via the PROFInet network communication.
	Disable Operation	0	Stops the motor using the setting at S100 inverter (ADV-8 “Stop Mode”).
4	Enable Ramp Generator	1	Performs acceleration and deceleration based on the acceleration and deceleration time settings at S100 inverter (PAR->DRV) to reach the Setpoint (frequency reference).
	Reset Ramp Generator	0	Forces the operation frequency to “0.” (Operating frequency drops to “0” after decelerating based on the Dec Time set at the inverter).
5	Unfreeze Ramp Generator	1	A fixed Ramp Generator operation is not assigned. Acceleration and deceleration is performed based on the Acc/Dec times configured in the inverter’s Drive group (PAR->DRV) parameter settings to to reach the Setpoint (frequency reference).
	Freeze Ramp Generator	0	Speed reference from the PLC is ignored and the Ramp Gernerator operation is fixed. The motor is operated via the network communication by the PROFInet, and the current operation frequency is maintained.
6	Enable Setpoint	1	The motor is operated based on the speed reference from the PLC.
	Disable Setpoint	0	Forces the motor operation frequency to “0.”
7	Fault Acknowledge	(0 -> 1)	Set to 1 to release fault conditions at the S100 inverter.
8	Jog1 ON/OFF	-	Not supported
9	Jog2 ON/OFF	-	Not supported
10	Control By PLC	1	The S100 inverter is controlled by the PLC’s control word (STW1) received via the PROFInet network communication.
	No Control By PLC	0	The PLC’s control word (STW1) received via the PROFInet network communication is ignored.
11–15	-	-	Reserved

The status transition explained in <10. PROFIdrive Operation Diagram> can be performed by setting the four control word bits, from bit 0 to bit 3. For example, setting the four bits to 1 (XXXX XXXX XXXX 1111) changes the status to “Operation.”

Note

“X” in the bit setting example indicates that the relevant bit can be set to either 0 or 1 without affecting the control word bit settings.

The following table lists the status transition controlled by the control word bits (Bits 0 to 3).

Command	Bit3	Bit2	Bit1	Bit0
QuickStop	X	0	X	X
CoastStop	X	X	0	X
NoQuickStop	X	1	X	X
NoCoastStop	X	X	1	X
SwitchOFF	X	1	1	0
SwitchON	X	1	1	1
OperationEnable	1	1	1	1
OperationDisable	0	1	1	1

Internally, the control uses the inverter’s operation command at communication address 0x0382, and the Control word (STW1) for basic motor operation uses address 0x47F (bits 0, 1, 2, 3, 4, 5, 6, 10). When a PLC sets the bits at 0x47F, motor operation is possible simply by providing a frequency reference.

Example) Bit Settings for Motor Operation

Bit	Bit10	Bit9	Bit8	Bit7	Bit6	Bit5	Bit4	Bit3	Bit2	Bit1	Bit0
Setting	1	–[Note)]	–[Note)]	0	1	1	1	1	1	1	1

Note) ’-‘ indicates that the bit can be set to either 0 or 1 without affecting the motor operation.

7.2.2 Status Word (ZSW1)

Bit	Name	Value	Description
0	RDY_ON	1	Ready for Switch ON (Operation is available.)
		0	Not Ready for Switch OFF (Operation is not available.)
1	RDY_OPERATION	1	Bit 0 value of the control word (STW1) that has been input.
		0	
2	OPERATION	1	Bit 3 value of the control word (STW1) that has been input.
		0	
3	Fault Present	1	Fault condition is present at the inverter.
	No Fault	0	Fault condition is not present at the inverter.
4	No OFF2	1	Bit 1 value of the control word (STW1) that has been input.
	OFF2	0	
5	No OFF3	1	Bit 2 value of the control word (STW1) that has been input.
	OFF3	0	
6	SWC_ON_INHIB	1	Switching On inhibited (Control is not available.)
		0	Switching On Not inhibited (Control is available.)
7	Warning Present	1	Warning condition is present at the inverter.
	No Warning Present	0	Warning condition is not present at the inverter.
8	Speed Error within tolerance	1	The motor speed has reached the frequency reference (“Setpoint value”).
	Speed Error out of tolerance	0	The motor speed has not reached the frequency reference (“Setpoint value”).
9	Control Requested	1	Bit 10 value of the control word (STW1) that has been input.
	No Control Requested	0	
10	ABOVE_LIMIT	-	Not supported
11 to 15	-	-	Reserved

“bits 0 to 2” and “bit 6” indicate the following communication module status, as explained in <10. PROFIdrive Status Diagram>.

Status Word	Status
xxxx xxxx x1xx x000	“Switching On Inhibited”
xxxx xxxx x0xx x001	“Ready For Switching On”
xxxx xxxx x0xx x011	“Ready For Operation”
xxxx xxxx x0xx x111	“Operation”

Note

“X” in the bit setting example indicates that the bit can be set to either 0 or 1 without affecting the control word bit settings.

7.2.3 Setpoint value

Frequency reference for inverter operation. Setpoint value is expressed in Hz, and can be increased or decreased by 0.01 Hz.

7.2.4 Actual speed value

The inverter’s actual output frequency. Actual speed value is expressed in Hz, and can be increased or decreased by 0.01 Hz.

7.2.5 Alarm Information

Bit	Name	Description
0	Bit for displaying “latch type trip information-1”	This bit is set to 1 when more than one bit in the “latch type trip information-1” parameter bit field is set to 1. Otherwise, it is set to 0. This bit references address 0h0330 in the inverter’s compatible parameter communication addresses.
1	Bit for displaying “latch type trip information-2”	This bit is set to 1 when more than one bit in the “latch type trip information-2” parameter bit field is set to 1. Otherwise, it is set to 0. This bit references address 0h0331 in the inverter’s

Bit	Name	Description
		compatible parameter communication addresses.
2	Bit for displaying “level type trip information”	This bit is set to 1 when more than one bit in the “level type trip information” parameter bit field is set to 1. Otherwise, it is set to 0. This bit references address 0h0332 in the inverter’s compatible parameter communication addresses.
3	Bit for displaying “H/W Diagnosis Trip information”	This bit is set to 1 when more than one bit in the “H/W Diagnosis Trip information” parameter bit field is set to 1. Otherwise, it is set to 0. This bit references address 0h0333 in the inverter’s compatible parameter communication addresses.
4	Bit for displaying “Warning information”	This bit is set to 1 when more than one bit in the “Warning information” parameter bit field is set to 1. Otherwise, it is set to 0. This bit references address 0h0334 in the inverter’s compatible parameter communication addresses.
5 to 15	-	Reserved

7.2.6 Torque

The inverter’s output torque. Torque is expressed in percentages (%), and can be increased or decreased by 0.1%.

Caution

Torque value is displayed correctly only if the inverter’s control mode is set to “Sensorless” or “Vector.”

7.2.7 Current

The inverter’s output current. Torque is expressed in amperes (A), and can be increased or decreased by 0.1 A.

7.2.8 Dummy

Not used

8 Supported PROFIdrive Parameters

Parameters

PNU	R/W	Description
922	R	Displays the selected PROFIdrive Cyclic Telegram type. 1 → Standard Telegram 100 → Vendor Specific Telegram * This parameter does not support writing via PROFIdrive protocol. Set this parameter using the inverter keypad. Go to COM 22 “opt para-13,” and set it to “0” to select “Standard Telegram,” and to “1” to select “Vendor Specific Telegram.”
944	R	Fault message counter The parameter value increases by 1 each time a fault condition occurs. The controller, such as a PLC, on the PROFInet is notified of the inverter’s fault condition by this parameter.
947	R	Fault number * Refer to ***<9 Fault Message Counter (PNU[944]) and Fault Number (PNU[947])>***.
953	R	Warning word * Displays the “Warning information” parameter value at communication address 0h0334.
964	R	An array of five 16-bit word values that expresses the S100 communication module information. 0: Manufacturer (the PROFInet vendor ID “849” for LSIS, as defined by the Profibus.org, is displayed (referenced from communication address 0h351). 1. Device Type: “1” is displayed for S100 PROFInet communication module. 2. Version: Displays the software version. *E.g.,) “102” for Version 1.2* 3. Firmware Date (yyyy): Displays the year of the software release. *E.g.,) “2015” for the year 2015* 4. Firmware Data (dd/mm): Displays the date and month of the software release. *E.g,) “2512” for December 25*
965	R	Indicates the Profile ID. (0h328 – Profile 3 v4.0)

PNU	R/W	Description
967	R	Displays the control word (STW1) value that is currently input via the PROFInet communication network.
968	R	Displays the status word (ZSW1) value that is currently input via the PROFInet communication network.
972	R/W	The S100 communication module is reset when the parameter value is changed to “1” from “0.”
61000	R	Displays the device name of the S100 PROFInet communication module.
61001	R	Displays the IP address of the S100 PROFInet communication module.
61002	R	Displays the MAC address of the S100 PROFInet communication module.
61003	R	Displays the gateway IP address of the S100 PROFInet communication module.
61004	R	Displays the subnet mask of the S100 PROFInet communication module.
1000	R/W	S100 Parameter Access Address (communication address for reading or writing inverter parameters)
1001	R/W	S100 Parameter Access Data (data value of inverter parameters for reading or writing)
1002	R/W	S100 Parameter Access Command 1: write 2: read
1003	R/W	S100 Parameter Access Acknowledge 0: Not completed 1: OK completed 2: Not OK completed

9 Fault Message Counter (PNU[944]) and Fault Number (PNU[947])

The Fault Message Counter (PNU[944]) parameter value increases by 1 each time an inverter fault occurs, and the fault is saved at the Fault Number (PNU[947]) parameter.

The Fault Number (PNU[947]) parameter can save 8 Fault Situations, and each Fault Situation contains 8 Fault Messages. A Fault Message consists of one 16bit word, and the Fault Number (PNU[947]) parameter consists a total of 64 words.

See the following diagram for the basic operation.

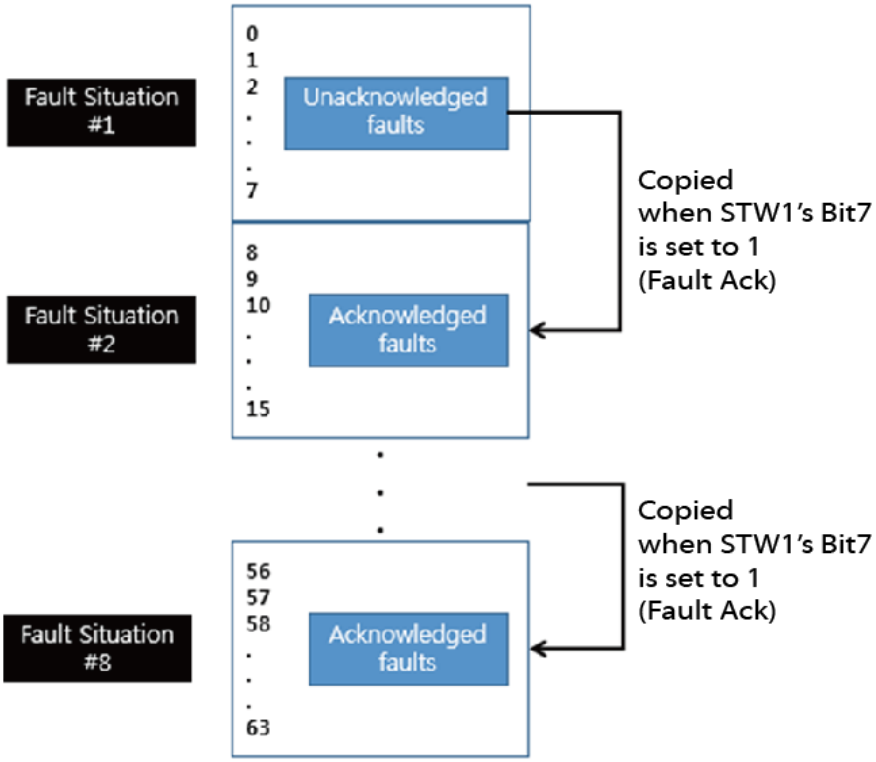

In the diagram, the current Fault Message is saved at Fault Situation #1. Each fault message is saved based on the time of occurrence, from index 0 to 63.

The fault messages are written (overwritten) to the memory when every eighth fault message in each Fault Situation is saved at index 7, 15, 23, 31, 39, 47, 55, and 63. When the PLC's control word bit 7 is set to 1, a "Fault Ack" is triggered, which in turn increases the Fault Situation number by 1 until it becomes 7 (Fault Situation #7).

The saved Fault Messages match the inverter trip information (latch type trip info-1, latch type trip info-2, level type trip info, H/W Diagnosis Trip info) as defined in the

following table.

Trip Names	Fault Message
Overload Trip	1
Underload Trip	2
Inverter Overload Trip	3
E-Thermal Trip	4
Ground Fault Trip	5
Missing Output Phase Trip	6
Missing Input Phase Trip	7
Reserved	8
Reserved	9
NTC Trip	10
Overcurrent Trip	11
Overvoltage Trip	12
External Trip	13
Arm Short	14
Overheat Trip	15
Fuse Open Trip	16
MC Fail Trip	17
Reserved	18
PTC (Thermal sensor) Trip	19
FAN Trip	20
Reserved	21
Parameter Write Error	22
Pre PID Fail	23
IO Board Connection Fault	24
External Brake Trip	25
No Motor Trip	26
Option Card Connection Fault	27
Reserved	28
Safety A Trip	29

Trip Names	Fault Message
Safety B Trip	30
Reserved	31
Reserved	32
BX	33
LV	34
Lost Command	35
Keypad Lost Command	36
Reserved	37
Reserved	38
Reserved	39
Reserved	40
Reserved	41
Reserved	42
Reserved	43
Reserved	44
Reserved	45
Reserved	46
Reserved	47
Reserved	48
ADC Error	49
EEPROM Error	50
Watchdog-1 Error	51
Watchdog-2 Error	52
Reserved	53
QueueFull	54
Reserved	55
Reserved	56
Reserved	57
Reserved	58
Reserved	59

Trip Names	Fault Message
Reserved	60
Reserved	61
Reserved	62
Reserved	63
Internal Communication Error between the Inverter and the Option Card	64

10 Accessing the S100 Common Parameters using the PROFIdrive Parameters

Using the PROFIdrive parameters (PNU [1000–1003]), you can access the S100 inverter parameters for data reading and writing.

The following diagram explains the parameter writing procedure.

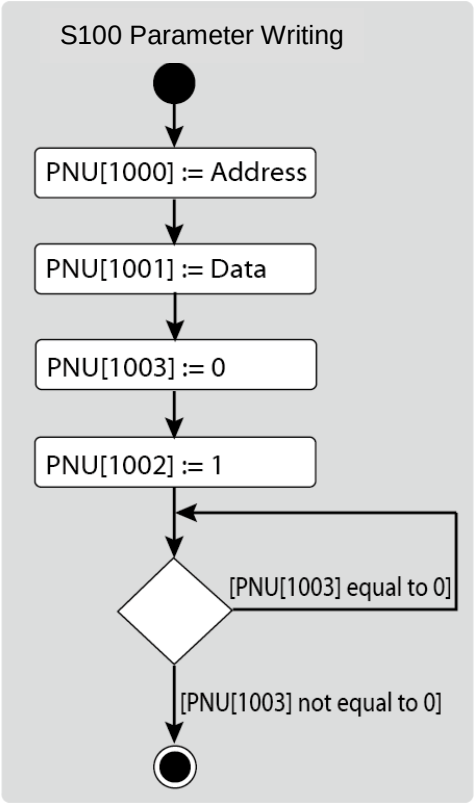

1 Inverter communication address is assigned to PNU [1000].

2 Inverter setting data is assigned to PNU [1001].

3 PNU [1003] is set to 0.

4 When PNU [1002] is set to 1, the S100 PROFInet communication module references the values assigned at PNU [1000] and PNU [1001] and writes the values to the inverter's internal parameters.

5 After writing the inverter's internal parameters, the S100 PROFInet communication module saves the result to PNU [1003].

6 PNU [1003] is used to verify successful completion of writing procedure.

The following diagram explains the parameter reading procedure.

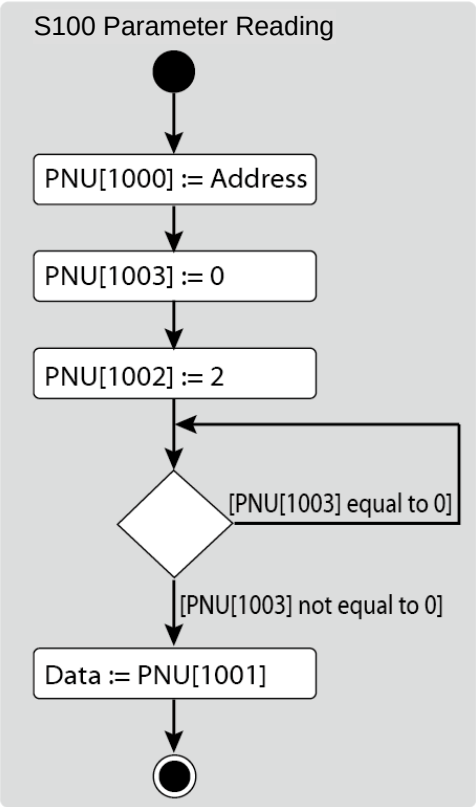

1 Inverter communication address is assigned to PNU [1000].

2 PNU [1003] is set to 0.

3 When PNU [1002] is set to 2, the S100 PROFInet communication module references PNU [1000] and reads the data saved in the inverter's internal address pointed by it.

4 After reading the inverter's internal parameters, the S100 PROFInet communication module saves the result to PNU [1003]. If the reading procedure is successful, it saves the read data to to PNU[1001].

5 PNU [1003] is used to verify successful completion of reading procedure. If the reading procedure is successful, the PLC reads the data saved at PNU[1001].

11 Accessing S100 Inverter Parameters using the PROFInet Record Data Object

Using the PROFInet Record Data object, you can access the S100 inverter parameters for data reading and writing, without the PROFIdrive communication protocol.

The inverter's parameter data is assigned to the PROFInet Record Data from the index address 0h5000. Using the PROFInet IO RW service, you can directly access the addresses to perform reading and writing.

For example, Siemens PLC users may access the inverter's parameter data mapped to the PROFInet Record using "WRREC" and "RDREC" function blocks. Refer to the user's manual that that is supplied with the inverter for more information about the inverter parameter data.

E.g.) The inverter's common parameter address 0h0001 is assigned to a PROFInet index address 0h5001.

12 Processing the Alarms

The S100 communication module sends a PROFInet alarm notification to the PLC when a fault trip occurs, or when it is released.

Fault Alarm Packet Details

Type	API	Slot Number	Subslot Number	Alarm Specifier	User Structure Identifier	Channel Properties	Channel Error Type
Fault Occurrence	0h3A00	1	2	Diagnosis	0h8000	0h0800	9012
Fault Release	0h3A00	1	2	Diagnosis	0h8000	0h1000	9012

After a fault alarm is received, the PLC has to read the inverter trip parameters to collect detailed information about the fault trip, such as the fault trip type (latch type trip-1, latch type trip-2, level type trip, or H/W diagnosis trip).

13 Trouble Shooting

No.	Symptoms	Resolution
1	ERROR indicator and CPU indicator are both turned off.	Power is not supplied to the communication module. • Correctly Install the communication module to the inverter. • Check the connector pins on the communication module for bends or other defects. • If the problem persists after taking the measures listed above, it may indicate that the hardware is malfunctioning. Contact a service agent near you or LSIS customer support.
2	ERROR indicator is turned on, and CPU indicator is turned off.	The hardware is malfunctioning. Contact a service agent near you or LSIS customer support.
3	ERROR indicator and CPU indicator are flashing synchronously in 1 second intervals.	• Check the connector pins on the communication module for bends or other defects. • If the problem persists after taking the measures listed above, it may indicate that the hardware is malfunctioning. Contact a service agent near you or LSIS customer support.
4	CPU indicator is flashing in 1 second intervals, and ERROR indicator is flashing in 2 second intervals.	• Check the communication link where the LAN cable is connected and ensure that the LINK indicator is turned on. If the LINK indicator is turned off, check the LAN cable and ensure that it is properly connected to the link port. • Check to ensure that the communication module's device name and [COM-22] Telegram Mode parameter settings match the network configuration at the PLC. • Check to ensure that the IP address assigned to the communication module is not already used by other devices on the same network. • If the problem persists after taking the measures listed above, it may indicate that the hardware is malfunctioning. Contact a service agent near you or LSIS customer support.
5	The communication module's IP address is randomly changed.	• A PLC can forcibly change the communication module's IP address based on the PLC settings. Check the PLC configuration software and see if the IP change by the PLC is allowed. • Set the PLC software to use the IP address set at the communication module if you do not want the communication module IP to be changed.

Warranty

Maker	LS Industrial Systems Co., Ltd.	**Installation (Start-up) Date**	
Model No.	**LV-S100 PROFInet Option Board**	**Warranty Period**	
Customer Information	Name		
	Address		
	Tel.		
Sales Office (Distributor)	Name		
	Address		
	Tel.		

Warranty period is 12 months after installation or 18 months after manufactured when the installation date is unidentified. However, the guarantee term may vary on the sales term.

IN-WARRANTY service information
If the defective part has been identified under normal and proper use within the guarantee term, contact your local authorized LS distributor or LS Service center.

OUT-OF WARRANTY service information
The guarantee will not apply in the following cases, even if the guarantee term has not expired.

- Damage was caused by misuse, negligence or accident.
- Damage was caused by abnormal voltage and peripheral devices' malfunction (failure).
- Damage was caused by improper repair or altering by other than LS authorized distributor or service center.
- Damage was caused by an earthquake, fire, flooding, lightning, or other natural calamities.
- When LS nameplate is not attached
- When the warranty period has expired.

Revision History

No	Date	Edition	Changes
1	2016.01	First Release	