INSTRUCTIONS TO USERS

Thank you for your selecting our Profibus-DP option.

This instruction includes how to use the product and the instruction during handling.

Your wrong handling of this product may cause damage and then it reduces the duration of the product.

Therefore, please read this instruction carefully and then observes the instruction without fail.

www.aksaotomasyon.com

Safety Precautions

Safety Precautions are for using the product safe and correct in order to prevent the accidents and danger, so please go by them.

The precautions explained here only apply to the iS7 Profibus Option. For safety precautions on the Inverter system, refer to the iS7 User's manual.

The precautions are divided into 2 sections, 'Warning' and 'Caution'. Each of the meanings is represented as follows.

Precaution		Definition
	Warning	**If violated instructions, it can cause death, fatal injury or considerable loss of property.**
	Caution	**If violated instructions, it can cause a slight injury or slight loss of products**

The symbols indicated in products and datasheet mean as follows

Symbol	Definition
	This symbol means pay attention because of danger of injury, fire or malfunction.
	This symbol means paying attention because of danger of electric shock.

Store this datasheet in a safe place so that you can take it out and read it whenever necessary. Always forward it to the end user.

Warning
▪ **Do not contact the terminals while the power is applied.** It can cause electric shock and malfunction. ▪ **Protect the product from being gone into by foreign metallic matter.** It can cause fire, electric shock and malfunction.

AKSA OTOMASYON
www.aksaotomasyon.com

⚠ Caution

- **Be sure to check the rated voltage and terminal arrangement for the module and observe them correctly.**

  It can cause fire, electric shock and malfunction.
- **Tighten up the terminal screw firmly to defined torque when wiring.**

  If the terminal screw looses, it can cause fire and electric shock.
- **Do not install around inflammable substances.**

  It can cause fire.
- **Use in an environment that meets the general specifications contained in this datasheet.**

  It can cause electrical shock, fire, erroneous operation and deterioration.
- **Be sure that external load does not exceed the rating of output module.**

  It can cause fire and erroneous operation.
- **Do not use in the environment of direct vibration.**

  It can cause electrical shock, fire and erroneous operation.
- **Do not disassemble, repair or modify except A/S specialist.**

  It can cause electrical shock, fire and erroneous operation.
- **When disposing, treat it as industrial waste.**

  It can cause poisonous pollution or explosion.

AKSA OTOMASYON
www.aksaotomasyon.com

Precautions for use

- This option card is for SV-iS7 only. Don't install it to any other device than SV-iS7.
- When using the product, use the inverter with grounded. For the method of GND, please refer to the instruction manual of inverter body.
- Be sure to connect inverter and option card exactly. For the method of connection,

  Please refer to "6. How to install option" in iS7 User's Manual.
- Do not separating or remodeling the PCB of Option card.
- Turn off when install or uninstall the option.
- Use Mobile or Radio telegraph at 30cm away from the product.
- Input/output signal or communication wire should be 100mm away from high voltage cable or power line.

AKSA OTOMASYON
www.aksaotomasyon.com

Table of Contents

INSTRUCTIONS TO USERS III

SAFETY PRECAUTIONS IV

PRECAUTIONS FOR USE VI

TABLE OF CONTENTS VII

1. SUMMARY 1-1

1.1 Introduction 1-1

1.2 Construction of Product 1-1

2. PRODUCT SPECIFICATION 2-1

2.1 Basic Communication Specification of Profibus Option 2-1

2.2 Dimension 2-2

3. APPEARANCE AND NAME OF EACH PART 3-1

4. OPTION INSTALLATION METHOD 4-1

4.1 How to install option to inverter 4-1

5. PROFIBUS PARAMETER 5-1

5.1 Station Address Setting 5-1

5.2 Number of Status Data Setting 5-1

5.3 Number of Control Data Setting 5-1

5.4 Address of Output Data Setting 5-1

5.5 Address of Input Data Setting 5-2

5.6 I/O Data Send/Receive 5-2

6. BASIC FEATURE 6-1

7. UNUSUAL OPERATION AND MEASURES 7-1

7.1 DATA_EX LED Operation and Measures against Error 7-1

7.2 CPU LED Operation and Measures against Error 7-2

7.3 Error LED Operation and Measures against Error 7-2

8. CONSTRUCTION OF SYSTEM & TRANSMISSION SPECIFICATION 8-1

8.1 Installation of Terminating Resistance and its Specification 8-1

AKSA OTOMASYON
www.aksaotomasyon.com

8.2 Max. Transmitting Distance Specification 8-1

9. ENVIRONMENT CONFIGURATION & OTHER FUNCTIONS 9-1

9.1 GSD Files (Electronic Data Sheets) 9-1

9.2 User Parameter Setting 9-2

9.3 Extended Diagnostic 9-2

10. COMMUNICATION PARAMETER 10-1

10.1 Map Structure of Whole Communication Parameter in European Style 10-1

10.2 Parameter Group for Periodical Transmission 10-2

10.3 Parameter Group for User & Macro Grp Transmission 10-3

10.4 0h240 ~ 0h27F: Macro Grp Parameter Currently Configured 10-4

11. PARAMETER DESCRIPTION 11-1

11.1 List of iS7 Profibus Communication Related Parameters 11-1

11.2 Description of iS7 Profibus Communication Related Parameters 11-3

12. EXISTING IS5/IG5/ IG5A COMPATIBLE COMMON AREA PARAMETER 12-7

13. IS7 EXTENDED COMMON AREA PARAMETER 13-14

WARRANTY ..... A

MANUAL REVISION HISTORY ..... B

AKSA OTOMASYON
www.aksaotomasyon.com

1. Summary

1.1 Introduction

You can connect SV-iS7 inverter to Profibus network using Profibus option.

With Profibus option board built in, inverter control and monitoring by PLC sequence program or optional master module is available.

As a number of inverters in connection operate through one communication line only, It reduces the installation cost compared with communication being unused.

Furthermore, its simple wiring enables the reduction of installation time and easy maintenance and repair.

1.2 Construction of Product

Profibus option, (1) 9-Pin Connector, Fixing Screw (M3), Manual

AKSA OTOMASYON
www.aksaotomasyon.com

www.aksaotomasyon.com

2. Product Specification

2.1 Basic Communication Specification of Profibus Option

- Device Type : Profibus DP Slave
- Auto Baud Rate Detect : Support
- Sync Mode : Support
- Freeze Mode : Support
- Max Input Length : 8 words
- Max Output Length : 8 words
- Max Data Length : 16 words
- Baud Rate Support : 9.6K, 19.2K, 93.75K, 187.5K, 500K, 1.5M, 3M, 6M, 12M
- Modular Station : Support
- Max Module : 2

AKSA OTOMASYON
www.aksaotomasyon.com

2.2 Dimension

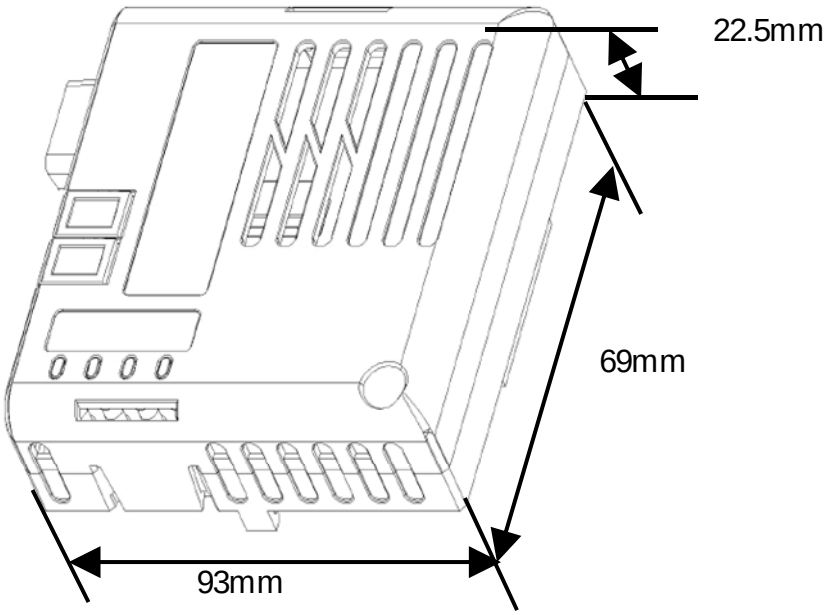

AKSA OTOMASYON
www.aksaotomasyon.com

3. Appearance and Name of Each Part

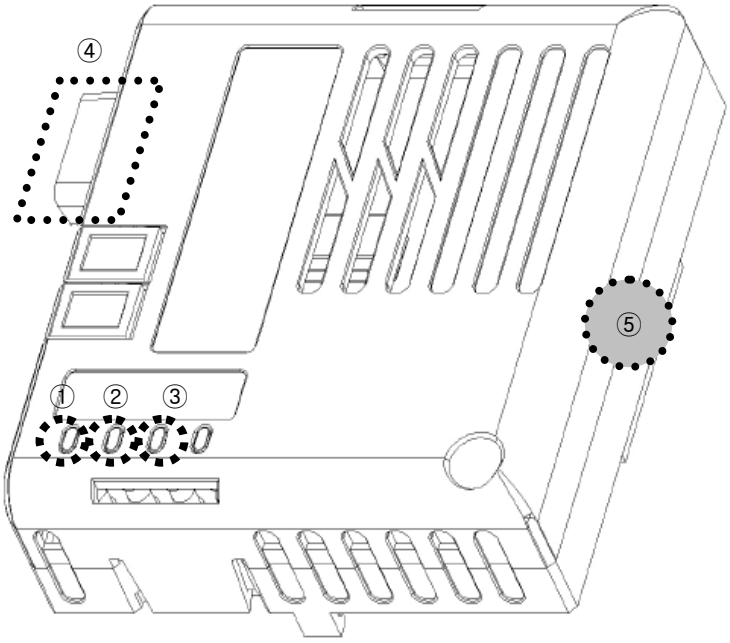

Figure 1. Exterior Appearance

■ LED Display

No.	Name	Application
①	DATA_EX LED	Always “On” when Profibus is Online status.
②	ERROR LED	“On” when error occurs in the option
③	CPU LED	“On” when the option board is built in the inverter and power is supplied to the inverter
④	Communication connecting Terminal	Terminal that connects it with Profibus communication
⑤	Inverter connecting Connector	Terminal that connects it with inverter body

※ For further operation, please refer to ‘7. Troubleshooting’.

■ Communication Line Connecting Terminal

Pin No.	Signal	Description
1	Shield	Protective Ground Line
2	M24	24V Output GND
3	RxD/TxD-P	Send/Receive Data Plus
4	CTRL-P	Control Signal for Repeater
5	DGND	Signal GND
6	VP	5V for Terminating Resistance
7	P24	24V Output Plus
8	RxD/TxD-N	Send/Receive Data Negative
9	CTRL-N	Control Signal for Repeater

NOTE
This product supports the signal Nos. 3,5,6,8 only.

AKSA OTOMASYON
www.aksaotomasyon.com

4. Option Installation Method

4.1 How to install option to inverter

1. Power off.
2. Connect connector after isolating front cover from iS7 as shown in Figure below.
3. Fix by enclosed volt.
4. Power On and Check “Profibus” at parameter, “CNF 31: Option-1 Type”.

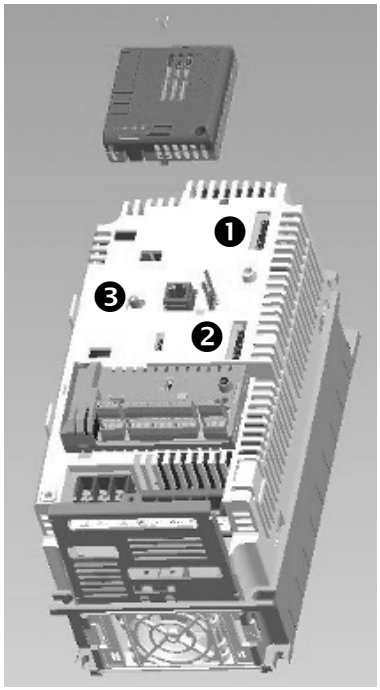

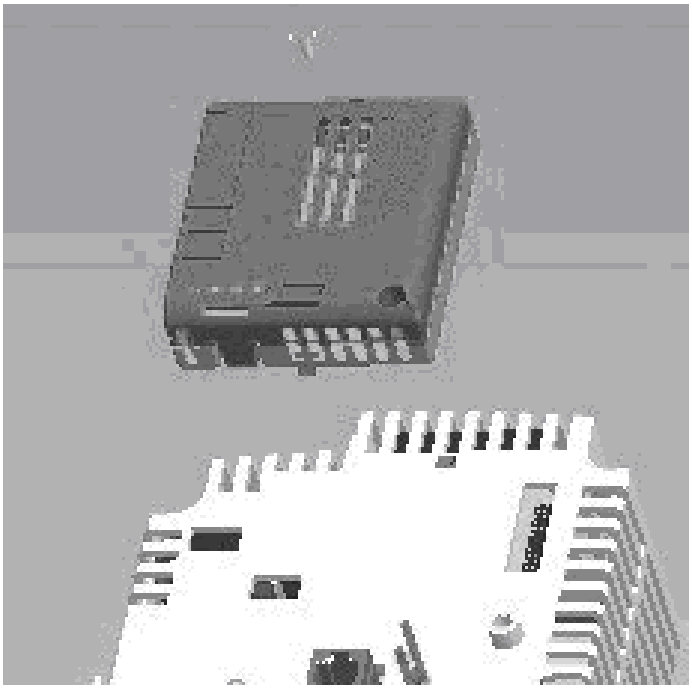

⚠CAUTION
Cut off the power when remove the option, it may cause electric shock or break down.

NOTE
1. iS7 has 3 option connectors, they are located in front upper, lower and left side: Option ❶ ❷ ❸ at the Figure. **2.** Profibus must be connected with Option

AKSA OTOMASYON
www.aksaotomasyon.com

www.aksaotomasyon.com

5. Profibus Parameter

5.1 Station Address Setting

	Minimum Value	Max. Value	Position on Keypad
Field Bus ID	0	125	No. 7 of COM Group

※ Station address is a peculiar value distinguishing each node in the Profibus Network, and therefore each different device cannot jointly possess the same value. Station address can be changed through Keypad manipulation. Default value set from the factory is 1.

5.2 Number of Status Data Setting

Determines the number of output data (Variable to be monitored out of the inverter variables)

	Minimum Value	Max. Value	Position on Keypad
Para Status Num	0	8	No. 30 of COM Group

5.3 Number of Control Data Setting

Determines the number of input data (Variable to be commanded from outside among the inverter variables)

	Minimum Value	Max. Value	Position on Keypad
Para Ctrl Num	0	8	No. 50 of COM Group

5.4 Address of Output Data Setting

Determines the address setting in the number of data to be output.

	Minimum Value	Max. Value	Position on Keypad
Para Status 1~8	0h0000	0hFFFF	Nos. 31~38 of COM Group

5.5 Address of Input Data Setting

Determines the address setting in the number of data to be input.

	Minimum Value	Max. Value	Position on Keypad
Para Ctrl 1~8	0h0000	0hFFFF	Nos. 51~58 of COM Group

5.6 I/O Data Send/Receive

Output data set in the keypad of the inverter is transmitted to Profibus Master Module (Control Program of PLC or PC) through Profibus Option Module. On the contrary, the control data is transmitted from Profibus Master Module (Control Program of PLC or PC) to Profibus Option Module, which is sent from Profibus Option Module to the inverter.

AKSA OTOMASYON
www.aksaotomasyon.com

6. Basic Feature

When turning on the inverter power or when reset occurs;

- CPU LED flashes if power supply is in normal state.
- ERR LED is On if power supply is in abnormal state.
- Conduct configuration using the keypad.
- If the communication with the Master Station as configured, Profibus communication status DATA_EX LED is Off.

www.aksaotomasyon.com

7. Unusual Operation and Measures

The status of device and network is displayed through three (3) LED (DATA_EX, ERR, CPU) lights located at the lower part of the Product. The current status can be checked through the display of LED.

7.1 DATA_EX LED Operation and Measures against Error

LED	Status	Cause	Help
Off	Off-Line	When Master fails to start communication	Master starts communication.
		Wrong wiring of Connector	Check for the wiring of pin number and terminating resistance of the connector.
		No master inside the current network	No master allotted or problem of master station.
		Station Address Error	Check if the station address allotted to the Profibus-use option module of LS inverter is same as that designated by keypad in the tool configured, and it is only one in the network.
		Network Config. Problem.	Check if it exceeds the max. length of the segment. Check if 32 or more stations including repeater are connected with the segment. Check if 126 or more stations including repeater are connected with the network.
On	On-Line Status	Network, Station Address, Parameterization, Configuration are all in normal condition	

AKSA OTOMASYON
www.aksaotomasyon.com

7.2 CPU LED Operation and Measures against Error

LED	Status	Cause	Help
Off	Power Supply Defect	inverter power supply defect/ Defect of Contact between inverter and option	Check for the condition of inverter power supply. Check for error of inverter. Check for the contact between inverter and connector.
Flashing with 1 sec. interval	Normal	Normal Operation	

7.3 Error LED Operation and Measures against Error

LED	Status	Cause	Help
Off	Normal	Normal Operation	
Flashing with 1 sec. interval	Inverter ~ option communication Error	Communication between inverter and option is not available	Check for abnormal connection between option and inverter. ▪ It flashes like CPU LED.
Flashing with approx. 1 sec. interval	CONFIG ERROR	When On line status is arranged in the Master, if configurations of Master and Profibus option are different each other.	Check if the config. info. of inverter set in Master corresponds with that inside the inverter. ▪ Configured Data: Number of Status Data and Control Data. ▪ It flashes contrary to CPU LED.

AKSA OTOMASYON
www.aksaotomasyon.com

8. Construction of System & Transmission Specification

8.1 Installation of Terminating Resistance and its Specification

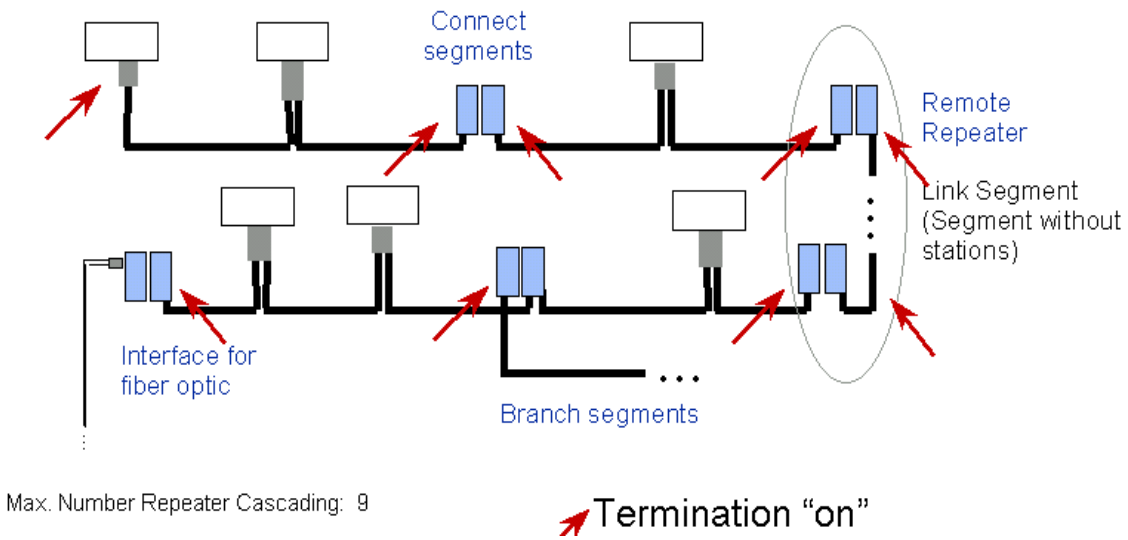

8.2 Max. Transmitting Distance Specification

Communication Speed(Kbps)	Max. Segment Length	Max. Extended Distance
9.60	1000 m / 3278 feet	10000 m / 32786 feet
19.20	1000 m / 3278 feet	10000 m / 32786 feet
93.75	1000 m / 3278 feet	10000 m / 32786 feet
187.50	1000 m / 3278 feet	10000 m / 32786 feet
500.00	400 m / 1311 feet	4000 m / 13114 feet
1500.00	200 m / 655 feet	2000 m / 6557 feet
3000.00	100 m / 327 feet	1000 m / 3278 feet
6000.00	100 m / 327 feet	1000 m / 3278 feet
12000.00	100 m / 327 feet	1000 m / 3278 feet

9. Environment Configuration & Other Functions

9.1 GSD Files (Electronic Data Sheets)

This is the file including the information of inverter Profibus Option Module.

This file is required in the Profibus Configuration Software. Be sure to use iS7-use GSD file.

The relevant file can be downloaded from the homepage of LSIS Co., Ltd. (http://www.lsis.biz).

- GSD File Name : LSIS0A6C.GSD
- Version : 2.00
- ICON File Name
  - Stop Icon : LSIS_INV_S.DIB
  - Run Icon : LSIS_INV_R.DIB
  - Diagnostic Icon : LSIS_INV_D.DIB
- It doesn't support from Module = "9 Word Status Input Data" 0h58 to Module = "16 Word Status Input Data", and from Module = "9 Word Control Output Data" 0h68 to Module = "16 Word Control Output Data" 0h6F.

You may attach LSIS0A6C.GSD to the folder where GSD file is stored in Master Configuration program, and attach ICON files to the ICON storage folder.

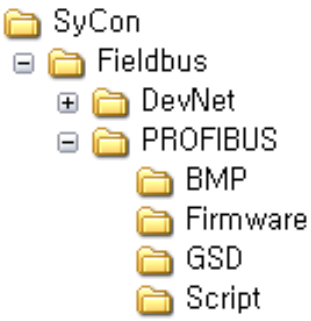

Ex) In case it is Sycon used in XGT;

Here, you may attach LSIS0A6C.GSD to GSD under the PROFIBUS folder, and then attach ICON files to BMP.

9.2 User Parameter Setting

You may set Profibus-use User Parameter including Sycon in Profibus Master.

(1) Data Word Format

Inverter data is word, which is sent divided into byte at the time of data transmission.

At this time, whether transmitting to MSB-LSB or to LSB-MSB will be elected.

Initial value is MSB-LSB.

(2) Config Data Update

Decide if forcing to set the number of inverter I/O data compulsorily by the Master, or generating the Configuration Error.

Selection is to be made out of Disable and Enable. If Enable is selected, the set value of master is forced to be set in the inverter.

At this time, the initial value is Disable. If the number of I/O data set in the inverter doesn't corresponds with that set in the Master,

Config Err occurs. This is the useful function when testing the communication with the inverter under Enable status.

9.3 Extended Diagnostic

As the safety-related function, it generates diagnostic in the master when trip occurs in inverter or option.

There are 5 defined extended diagnostics as follows:

1. Cannot connect between Main and Option: Defect of communication between inverter and option
2. Inverter H/W Diag Trip: When hardware diagnostic trip occurs in the inverter
3. Inverter Latch Type Trip: When trip in latch type occurs
4. Inverter Level Type Trip: When trip in level type occurs
5. Inverter Warning: When warning occurs

AKSA OTOMASYON
www.aksaotomasyon.com

10. Communication Parameter

10.1 Map Structure of Whole Communication Parameter in European Style

Category	Address	Type of Parameter
iS5 Series Compatible Common Category	0h0000~0h00FF	
Parameter Registered Type Category	0h0100~0h01FF	Parameter registered on COM Grp
	0h0200~0h023F	Parameter registered on Usr Grp
	0h0240~0h027F	Parameter registered on Macro Grp
	0h0280~0h02FF	Reserved
European Common Category	0h0300~0h037F	Inverter State (Read Only) Parameter
	0h0380~0h03FF	Inverter Control (Read/Write) Parameter
	0h0400~0h0FFF	Reserved
KeyPad Parameter Category	0h1000	MAK Grp
	0h1100	DRV Grp
	0h1200	BAS Grp
	0h1300	ADV Grp
	0h1400	CON Grp
	0h1500	IN Grp
	0h1600	OUT Grp
	0h1700	COM Grp
	0h1800	APP Grp
	0h1900	AUT Grp
	0h1A00	APO Grp
	0h1B00	PRT Grp
	0h1C00	M2 Grp

AKSA OTOMASYON
www.aksaotomasyon.com

10.2 Parameter Group for Periodical Transmission

Parameter Group that can make Communication using the Address registered in Communication Function Group (COM)

0h100 ~ 0h107: Inverter Status Parameter registered on Status Para # of KeyPad Parameter COM Group

0h110 ~ 0h117: Inverter Control Parameter registered on Control Para # of KeyPad Parameter COM Group

All other categories (0h108 ~ 0h10F, 0h117 ~ 0h1FF) are invalid addresses.

Address	Parameter	R/W	Value Allotted by Bit
0h0100	Status Parameter #1	R	Parameter value registered on COM-31
0h0101	Status Parameter #2	R	Parameter value registered on COM-32
0h0102	Status Parameter #3	R	Parameter value registered on COM-33
0h0103	Status Parameter #4	R	Parameter value registered on COM-34
0h0104	Status Parameter #5	R	Parameter value registered on COM-35
0h0105	Status Parameter #6	R	Parameter value registered on COM-36
0h0106	Status Parameter #7	R	Parameter value registered on COM-37
0h0107	Status Parameter #8	R	Parameter value registered on COM-38
0h108~0h10F	Invalid address	-	Category not used
0h0110	Control Parameter #1	R/W	Parameter value registered on COM-51
0h0111	Control Parameter #2	R/W	Parameter value registered on COM-52
0h0112	Control Parameter #3	R/W	Parameter value registered on COM-53
0h0113	Control Parameter #4	R/W	Parameter value registered on COM-54
0h0114	Control Parameter #5	R/W	Parameter value registered on COM-55
0h0115	Control Parameter #6	R/W	Parameter value registered on COM-56

AKSA OTOMASYON
www.aksaotomasyon.com

Address	Parameter	R/W	Value Allotted by Bit
0h0116	Control Parameter #7	R/W	Parameter value registered on COM-57
0h0117	Control Parameter #8	R/W	Parameter value registered on COM-58
0h118~0h1FF	Invalid address	-	Category not used

10.3 Parameter Group for User & Macro Grp Transmission

0h200 ~ 0h23F: User Grp Parameter Currently Registered

Address	Parameter	Value Allotted by Bit
0h0200	User Grp. Code 1	Parameter value registered on U&M>USR->1
0h0201	User Grp. Code 2	Parameter value registered on U&M>USR->2
0h0202	User Grp. Code 3	Parameter value registered on U&M>USR->3
0h0203	User Grp. Code 4	Parameter value registered on U&M>USR->4
.	.	.
0h023C	User Grp. Code 61	Parameter value registered on U&M>USR->61
0h023D	User Grp. Code 62	Parameter value registered on U&M>USR->62
0h023E	User Grp. Code 63	Parameter value registered on U&M>USR->63
0h023F	User Grp. Code 64	Parameter value registered on U&M>USR->64

* In case of accessing the code not registered on User Grp, return to “Illegal data address” Error Code “02”.

AKSA OTOMASYON
www.aksaotomasyon.com

10.4 0h240 ~ 0h27F: Macro Grp Parameter Currently Configured

Address	Parameter	Value Allotted by Bit
0h0240	Macro Grp. Code 1	Parameter value registered on U&M>MC->1
0h0241	Macro Grp. Code 2	Parameter value registered on U&M>MC->2
0h0242	Macro Grp. Code 3	Parameter value registered on U&M>MC->3
0h0243	Macro Grp. Code 4	Parameter value registered on U&M>MC->4
.	.	.
0h024C	Macro Grp. Code 61	Parameter value registered on U&M>MC->61
0h024D	Macro Grp. Code 62	Parameter value registered on U&M>MC->62
0h024E	Macro Grp. Code 63	Parameter value registered on U&M>MC->63
0h024F	Macro Grp. Code 64	Parameter value registered on U&M>MC->64

* In case of accessing the code not smaller than the size of macro currently configured, return to “Illegal data address” Error Code “02”.

NOTE
For further inverter address and function, please refer to ‘Communication Function’, Section 11 in iS7 Main Body Manual.

AKSA OTOMASYON
www.aksaotomasyon.com

11. Parameter description

11.1 List of iS7 Profibus Communication Related Parameters

Code	Parameter Name	Initial Value	Range
CFG-30	Option-1 Type	-	-
DRV-06	Cmd Source	0(Fx/Rx-1)	0. Keypad
			1. Fx/Rx-1
			2. Fx/Rx-2
			3. RS485
			4. FieldBus
DRV-07	Freq Ref Src	0(Keypad-1)	0. Keypad-1
			1. Keypad-2
			2. V1
			3. Reserved
			4. V2
			5. I2
			6. Int 485
			7. Reserved
			8. Fieldbus
			9. Reserved
			10. Reserved
			11. Reserved
			12. Pulse
COM-06	FBus S/W Ver	-	-
COM-07	FBusID	1	1~125
COM-09	FBusLED	-	-
COM-30	Para Status Num	3	0~8
COM-31	Para Status-1	0h000A	0~0hFFFF
COM-32	Para Status-2	0h000E	0~0hFFFF

AKSA OTOMASYON
www.aksaotomasyon.com

Code	Parameter Name	Initial Value	Range
COM-33	Para Status-3	0h000F	0~0hFFFF
COM-34	Para Status-4	0h0000	0~0hFFFF
COM-35	Para Status-5	0h0000	0~0hFFFF
COM-36	Para Status-6	0h0000	0~0hFFFF
COM-37	Para Status-7	0h0000	0~0hFFFF
COM-38	Para Status-8	0h0000	0~0hFFFF
COM-50	Para Ctrl Num	2	0~8
COM-51	Para Control-1	0h0005	0~0hFFFF
COM-52	Para Control-2	0h0006	0~0hFFFF
COM-53	Para Control-3	0h0000	0~0hFFFF
COM-54	Para Control-4	0h0000	0~0hFFFF
COM-55	Para Control-5	0h0000	0~0hFFFF
COM-56	Para Control-6	0h0000	0~0hFFFF
COM-57	Para Control-7	0h0000	0~0hFFFF
COM-58	Para Control-8	0h0000	0~0hFFFF
PRT-12	Lost Cmd Mode	0(None)	0. None
			1. Free-Run
			2. Dec
			3. Hold Input
			4. Hold Output
			5. Lost Preset
PRT-13	Lost Cmd Time	1.0 sec	0.1~120.0 sec
PRT-14	Lost Preset F	0 Hz	Start frequency ~ Maximum frequency [Hz]

AKSA OTOMASYON
www.aksaotomasyon.com

11.2 Description of iS7 Profibus Communication Related Parameters

11.2.1 Mounted Communication Card Information – Option-1 Type (CNF-30)

The kind of communication card mounted on iS7 is automatically displayed.

When iS7 Profibus communication card is mounted, CNF-30 “Profibus” is automatically displayed.

Not displaying the name of option mounted on the Option Type indicates that interface communication between inverter body and option is not normally operated.

11.2.2 Establishment of Inverter Operation Command Source–Cmd Source (DRV-06)

The operation command source is set.

To issue run/stop command to inverter via Profibus communication, DRV-06 Cmd Source needs to be set into “Fieldbus”.

11.2.3 Establishment of Inverter Frequency Command Source–Freq Ref Src(DRV-07)

The frequency command source of inverter is set.

To set command frequency of inverter via Profibus communication, DRV-07Freq Ref Src needs to be set into “Fieldbus”.

11.2.4 Information of Mounted Communication Card Version–FBus S/W Ver(COM-06)

The version of mounted communication card is automatically displayed.

11.2.5 Station ID Setting–Fbus ID(COM-07)

It is a parameter to set Station ID values of Profibus. Station Number can be set from 1 to 125.

Duplicated Station ID setting is not permitted. Please check if Station ID value to be set is established as other Station ID of the network.

AKSA OTOMASYON
www.aksaotomasyon.com

11.2.6 Display of LED Status Indicating Communication Status–Fbus LED(COM-9)

It is a parameter that displays flashing status of DATA_EX, ERROR and CPU LEDs mounted on the Profibus communication cards.

LED status is displayed in the order of RESERVED, DATA_EX, ERROR and CPU LEDs from right to left on the keypad.

LED Type	RESERVED	DATA_EX (GREEN)	ERROR (RED)	CPU (GREEN)
Meaning	-	ON	OFF	ON
LCD KPD Value				

11.2.7 Establishment of Periodic Communication Parameters

(1) Input Data Number Setting– Para Status Num (COM-30)

The number of data inputted into master from inverter is set. The same value with the number of input data established in master configuration is inputted into COM-30 Para Status Num.

The discordance between the number of input data established in master configuration and that of COM-31 Para Status Num leads to communication failure.

(2) Establishment of Input Data Address– Para Status 1~8 (COM-31~38)

The Para Status address is set to meet the number established in OM-30 Para Status Num.

If COM-30 Para Status Num is set into“4”, inverter address through which data is sent to master needs to be inputted from COM-31~34 Para Status 1 to 4.

You can enter the inverter address by making reference to common area address and inverter keypad address.

(3) Output Data Number Setting– Para Ctrl Num (COM-50)

The number of data outputted to inverter from master is set. The same value with the number of output data established in master configuration is inputted into COM-30 Para Status Num.

AKSA OTOMASYON
www.aksaotomasyon.com

The discordance between the number of output data established in master configuration and that of COM-31 Para Status Num leads to communication failure.

(4) Establishment of Output Data Address– Para Control 1~8 (COM-51~58)

The Para Status address is set to meet the number established in OM-50 Para Ctrl Num, and only available inverter address is to be entered from 1 to 8.

If COM-50 Para Ctrl Num is set into“2”, inverter address which is applicable to data inputted from master needs to be entered from COM-51~52 Para Control 1 to 2.

You can enter the inverter address by making reference to common area address and inverter keypad address.

11.2.8 Establishment of Lost Command Parameters

(1) Operating Method in Case of the Communication Command Loss– Lost Cmd Mode (PRT-12)

The operating method in case of the communication command loss is set when the loss of communication command is perceived by the occurrence of communication loss during ‘communication command loss determination time’.

To use communication command loss function, DRV-06 Cmd Source needs to be set into “Fieldbus’, or RV-07 Freq Ref Src as “Fieldbus”.

The operating method in case of the communication command loss is summarized as follows.

Set Value	Description	
0	None	Operation continues even in the event of the communication command loss
1	Free-Run	Output is blocked by inverter, and motor stops in a free-run state.
2	Dec	Deceleration stop proceeds in accordance with time set in the PRT-07Trip Dec Time.
3	Hold Input	Operation continues by means of the average value of the input for the last 10 seconds until the moment when the loss of speed command is determined.
4	Hold Output	Operation continues by means of the average value of the output for the last 10 seconds until the moment when the loss of speed command is determined.
5	Lost Preset	Operation proceeds in accordance with frequency set in the PRT-14 Lost Preset F.

AKSA OTOMASYON
www.aksaotomasyon.com

(2) Communication Command Loss Determination Time– Lost Cmd Time (PRT-13)

The loss of communication command is perceived when communication loss occurs during the time established as ‘communication command loss determination time’.

To use communication command loss function, DRV-06 Cmd Source needs to be set into “Fieldbus’, or RV-07 Freq Ref Src as “Fieldbus”.

The loss is not recognized as an error as long as the communication is resumed within ‘communication command loss determination time’ and then system is restored to a normal state.

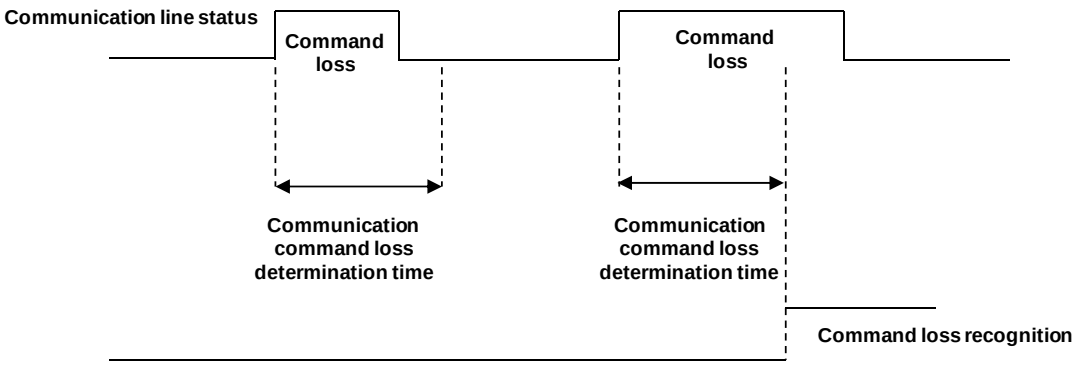

AKSA OTOMASYON
www.aksaotomasyon.com

12. Existing iS5/iG5/ iG5A compatible common area parameter

Address	Parameter	Scale	unit	R/W	Allotment for Bits
0h0000	Inverter model	-	-	R	B: iS7
0h0001	Inverter capacity	-	-	R	0: 0.75kW 1: 1.5kW 2: 2.2kW 3: 3.7kW 4: 5.5kW 5: 7.5kW 6: 11kW 7: 15kW 8: 18.5kW 9: 22kW 10: 30kW 11: 37kW 12: 45kW 13: 55kW 14: 75kW 15: 90kW 16: 110kW 17: 132kW 18: 160kW 19: 200kW 20: 220kW 21: 280kW 22: 375kW 65535: 0.4kW
0h0002	Inverter input voltage	-	-	R	0: 220V class 1: 400V class
0h0003	Version	-	-	R	(example) 0h0100: Version 1.00 0h0101: Version 1.01
0h0004	Reserved	-	-	R/W	
0h0005	Command frequency	0.01	Hz	R/W	
0h0006	Operating command (option) * see additional description	-	-	R	B15: Reserved B14, B13, B12, B11, B10, B9: 0: Keypad Freq 1: Keypad Torq 2~16: Terminal block sequential 17: Up 18: Down 19: STEADY 20: AUTO-A 21: AUTO-B 22: V1 23: 1

AKSA OTOMASYON
www.aksaotomasyon.com

Address	Parameter	Scale	unit	R/W	Allotment for Bits	
						24: V2 25: I2 26: Reserved 27: Built-in485 28: Communication option 29: PLC option 30: JOG 31: PID
					B8	0: Keypad 1: FX/RX-1 2: FX/RX-2 3: Built-in 485 4: Communication option 5: PLC option
					B7	
					B6	
				R/W	B5	Reserved
					B4	Emergency stop
					B3	W: Trip reset (0→1) R: Trip status
					B2	Reverse operation (R)
					B1	Forward operation (F)
					B0	Stop (S)
0h0007	accelerating time	0.1	sec	R/W	-	
0h0008	decelerating time	0.1	sec	R/W	-	
0h0009	output current	0.1	A	R	-	
0h000A	output frequency	0.01	Hz	R	-	
0h000B	output voltage	1	V	R	-	
0h000C	DC Link voltage	1	V	R	-	
0h000D	output power	0.1	kW	R	-	
0h000E	status of Inverter	-	-	-	B15	0: Remote, 1: Keypad Local
					B14	1: Frequency command by comm.

AKSA OTOMASYON
www.aksaotomasyon.com

Address	Parameter	Scale	unit	R/W	Allotment for Bits	
						(Built-in type, Option)
					B13	1: Run command by comm. (Built-in type, Option)
					B12	Reverse direction run command
					B11	Forward direction run command
					B10	Brake open signal
					B9	Jog mode
					B8	Stop
					B7	DC Braking
					B6	Speed reached
					B5	Decelerating
					B4	Accelerating
					B3	Operates according to the set value of Fault (Trip) *PRT-30 Trip Out Mode
					B2	Reverse operation
					B1	Forward operation
					B0	Stop
0h000F	Trip information	-	-	R	B15	Reserved
					B14	Reserved
					B13	Reserved
					B12	Reserved
					B11	Reserved
					B10	H/W-Diag
					B9	Reserved

AKSA OTOMASYON
www.aksaotomasyon.com

Address	Parameter	Scale	unit	R/W	Allotment for Bits	
					B8	Reserved
					B7	Reserved
					B6	Reserved
					B5	Reserved
					B4	Reserved
					B3	Level Type Trip
					B2	Reserved
					B1	Reserved
					B0	Latch Type Trip
0h0010	Input terminal information	-	-	R	B15	Reserved
					B14	Reserved
					B13	Reserved
					B12	Reserved
					B11	Reserved
					B10	P11 (extended I/O)
					B9	P10 (extended I/O)
					B8	P9 (extended I/O)
					B7	P8
					B6	P7
					B5	P6
					B4	P5
					B3	P4
					B2	P3

AKSA OTOMASYON
www.aksaotomasyon.com

Address	Parameter	Scale	unit	R/W	Allotment for Bits	
					B1	P2
					B0	P1
0h0011	output terminal information	-	-	R	B15	Reserved
					B14	Reserved
					B13	Reserved
					B12	Reserved
					B11	Reserved
					B10	Reserved
					B9	Reserved
					B8	Reserved
					B7	Reserved
					B6	Reserved
					B5	Relay 5(extended I/O)
					B4	Relay 4(extended I/O)
					B3	Relay 3(extended I/O)
					B2	Q1
					B1	Relay 2
					B0	Relay 1
0h0012	V1	0.01	%	R	V1 voltage input	
0h0013	V2	0.01	%	R	V2 voltage input(extended I/O)	
0h0014	I1	0.01	%	R	I1 current input	
0h0015	Motor rotation speed	1	rpm	R	Current motor rotation speed displayed	
0h0016	Reserved	-	-	-	-	

AKSA OTOMASYON
www.aksaotomasyon.com

Address	Parameter	Scale	unit	R/W	Allotment for Bits
~0h0019					
0h001A	Hz/rpm selection	-	-	R	0: Hz unit 1: rpm unit
0h001B	Motor poles displayed	-	-	R	Motor poles displayed

AKSA OTOMASYON
www.aksaotomasyon.com

www.aksaotomasyon.com

13. iS7 Extended common area parameter

13.1.1 Inverter Monitoring Area Parameter (Reading only)

Address	Parameter	Scale	unit	Allotment for Bits
0h0300	Inverter model	-	-	iS7: 000Bh
0h0301	Inverter capacity	-	-	0.75kW: 3200h
				1.5kW: 4015h, 2.2kW: 4022h, 3.7kW: 4037h, 5.5kW: 4055h, 7.5kW: 4075h, 11kW: 40B0h 15kW: 40F0h, 18.5kW: 4125h, 22kW: 4160h, 30kW: 41E0h, 37kW: 4250h, 45kW: 42D0h 55kW: 4370h, 75kW: 44B0h, 90kW: 45A0h 110kW: 46E0h, 132kW: 4840h, 160kW: 4A00h 185kW: 4B90h
0h0302	Inverter input voltage / power supply type (single phase, 3 phase) / cooling method	-	-	200V single phase open air cooling: 0220h
				200V 3 phase open air cooling: 0230h
				200V single phase forced cooling: 0221h
				200V 3 phase forced cooling: 0231h
				400V single open air cooling: 0420h
				400V 3 phase open air cooling: 0430h
				400V single phase forced cooling: 0421h
				400V 3 phase forced cooling: 0431h
0h0303	Inverter S/W version	-	-	(example) 0h0100: Version 1.00
				0h0101: Version 1.01

AKSA OTOMASYON
www.aksaotomasyon.com

Address	Parameter	Scale	unit	Allotment for Bits	
0h0304	Reserved	-	-	-	
0h0305	Inverter operating status	-	-	B15	0: normal status 4: Warning status 8: Fault status (operates according to set value of PRT-30 Trip Out Mode)
				B14	
				B13	
				B12	
				B11	-
				B10	
				B9	
				B8	
				B7	1: Speed search 2: Accelerating 3: Steady speed 4: Decelerating 5: Decelerating stop 6: H/W OCS 7: S/W OCS 8: Dwell operating
				B6	
				B5	
				B4	
				B3	0: stop 1: forward operating 2: reverse operating 3: DC operating(0 speed control)
				B2	
				B1	
				B0	
0h0306	Inverter run frequency command source	-	-	B15	Run command source 0: Keypad 1: Communication option 2:App/PLC 3. Built-in 485 4: Terminal Block 5:reserved 6:Auto 1 7:Auto 2
				B14	
				B13	
				B12	
				B11	
				B10	

AKSA OTOMASYON
www.aksaotomasyon.com

Address	Parameter	Scale	unit	Allotment for Bits	
				B9	
				B8	
				B7	Frequency command source 0: Keypad speed 1: Keypad torque 2~4:Up/Down run speed 5: V1 6: I1 7: V2 8: I2 9: Pulse 10: Built-in485 11: Communication option 12: App(PLC) 13: Jog 14: PID 15~22: Auto Step 25~39: Multi-step speed frequency
				B6	
				B5	
				B4	
				B3	
				B2	
				B1	
				B0	
0h0307	Keypad S/W version			(E.g) 0h0100: Version 1.00	
0h0308	Keypad Title version			0h0101: Version 1.01	
0h0309 ~0h30F	reserved				
0h0310	Output current	0.1	A	-	
0h0311	Output frequency	0.01	Hz	-	
0h0312	Output RPM	0	RPM	-	
0h0313	Motor feedback speed	0	RPM	-32768rpm~32767rpm (Having a polarity.)	
0h0314	Output voltage	0.1	V	-	
0h0315	DC Link voltage	0.1	V	-	
0h0316	Output power	0.1	kW	-	
0h0317	Output Torque	0.1	%	-	

AKSA OTOMASYON
www.aksaotomasyon.com

Address	Parameter	Scale	unit	Allotment for Bits	
0h0318	PID reference	0.1	%	-	
0h0319	PID feedback	0.1	%	-	
0h031A	Number of No.1 motor display	-	-	Number of No.1 motor display	
0h031B	Number of No.2 motor display	-	-	Number of No.2 motor display	
0h031C	Number of selected motor display	-	-	Number of selected motor display	
0h031D	Selection among Hz/rpm	-	-	0: Hz unit 1: rpm unit	
0h031E ~0h031F	Reserved	-	-	-	
0h0320	Digital input information			BI5	Reserved
				BI4	Reserved
				BI3	Reserved
				BI2	Reserved
				BI1	Reserved
				BI0	P11 (Extended I/O)
				B9	P10 (Extended I/O)
				B8	P9 (Extended I/O)
				B7	P8 (Basic I/O)
				B6	P7 (Basic I/O)
				B5	P6 (Basic I/O)
				B4	P5 (Basic I/O)
				B3	P4 (Basic I/O)
				B2	P3 (Basic I/O)
				B1	P2 (Basic I/O)

AKSA OTOMASYON
www.aksaotomasyon.com

Address	Parameter	Scale	unit	Allotment for Bits	
				B0	P1 (Basic I/O)
0h0321	Digital output information	-	-	BI5	Reserved
				BI4	Reserved
				BI3	Reserved
				BI2	Reserved
				BI1	Reserved
				BI0	Reserved
				B9	Reserved
				B8	Reserved
				B7	Reserved
				B6	Reserved
				B5	Relay 5 (Extended I/O)
				B4	Relay 4 (Extended I/O)
				B3	Relay 3 (Extended I/O)
				B2	Q1 (Basic I/O)
				B1	Relay 2 (Basic I/O)
				B0	Relay 1 (Basic I/O)
0h0322	Virtual digital input information	-	-	B15	Virtual DI 16 (COM85)
				B14	Virtual DI 15 (COM84)
				B13	Virtual DI 14 (COM83)
				B12	Virtual DI 13 (COM82)
				B11	Virtual DI 12 (COM81)
				BI0	Virtual DI 11 (COM80)

AKSA OTOMASYON
www.aksaotomasyon.com

Address	Parameter	Scale	unit	Allotment for Bits	
				B9	Virtual DI 10 (COM79)
				B8	Virtual DI 9 (COM78)
				B7	Virtual DI 8 (COM77)
				B6	Virtual DI 7 (COM76)
				B5	Virtual DI 6 (COM75)
				B4	Virtual DI 5 (COM74)
				B3	Virtual DI 4 (COM73)
				B2	Virtual DI 3 (COM72)
				B1	Virtual DI 2 (COM71)
				B0	Virtual DI 1 (COM70)
0h0323	Selected motor display	-	-	0: No.1 motor / 1: No.2 motor	
0h0324	AI1	0.01	%	Analog input1 (Basic I/O)	
0h0325	AI2	0.01	%	Analog input2 (Basic I/O)	
0h0326	AI3	0.01	%	Analog input3 (Extended I/O)	
0h0327	AI4	0.01	%	Analog input4 (Extended I/O)	
0h0328	AO1	0.01	%	Analog output1 (Basic I/O)	
0h0329	AO2	0.01	%	Analog output2 (Basic I/O)	
0h032A	AO3	0.01	%	Analog output3 (Extended I/O)	
0h032B	AO4	0.01	%	Analog output4 (Extended I/O)	
0h032C	Reserved	-	-	-	
0h032D	Reserved	-	-	-	
0h032E	Reserved	-	-	-	
0h032F	Reserved	-	-	-	

AKSA OTOMASYON
www.aksaotomasyon.com

Address	Parameter	Scale	unit	Allotment for Bits	
0h0330	Latch type trip information-1	-	-	BI5	Fuse Open Trip
				BI4	Overheat Trip
				BI3	Arm Short
				BI2	External Trip
				BI1	Overvoltage Trip
				BI0	Overcurrent Trip
				B9	NTC Trip
				B8	Overspeed Deviation
				B7	Overspeed
				B6	Input open-phase trip
				B5	Output open-phase trip
				B4	Ground Fault Trip
				B3	E-Thermal Trip
				B2	Inverter Overload Trip
				B1	Underload Trip
				B0	Overload Trip
0h0331	Latch type trip information-2	-	-	BI5	Reserved
				BI4	Reserved
				BI3	Inverter output cutoff by terminal block input on Safety Option (applied to above 90kW)
				BI2	Slot3 option board contact defectiveness
				BI1	Slot2 option board contact defectiveness
				BI0	Slot1 option board contact defectiveness

AKSA OTOMASYON
www.aksaotomasyon.com

Address	Parameter	Scale	unit	Allotment for Bits	
				B9	No MotorTrip
				B8	External Brake Trip
				B7	Basic IO board contact defectiveness
				B6	Pre PID Fail
				B5	Error on Parameter Write
				B4	Reserved
				B3	FAN Trip
				B2	PTC (Thermal sensor) Trip
				B1	Encoder Error Trip
				B0	MC Fail Trip
0h0332	Level type trip information	-	-	B15	Reserved
				B14	Reserved
				B13	Reserved
				B12	Reserved
				B11	Reserved
				B10	Reserved
				B9	Reserved
				B8	Reserved
				B7	Reserved
				B6	Reserved
				B5	Reserved
				B4	Reserved
				B3	Keypad Lost Command

Address	Parameter	Scale	unit	Allotment for Bits	
				B2	Lost Command
				B1	LV
				B0	BX
0h0333	H/W Diagnosis Trip information	-	-	B15	Reserved
				B14	Reserved
				B13	Reserved
				B12	Reserved
				B11	Reserved
				B10	Reserved
				B9	Reserved
				B8	Reserved
				B7	Reserved
				B6	Reserved
				B5	Reserved
				B4	Gate Drive Power Loss
				B3	Watchdog-2 error
				B2	Watchdog-1 error
				B1	EEPROM error
				B0	ADC error
0h0334	Warning information	-	-	B15	Reserved
				B14	Reserved
				B13	Reserved
				B12	Reserved

AKSA OTOMASYON
www.aksaotomasyon.com

Address	Parameter	Scale	unit	Allotment for Bits	
				B11	Reserved
				B10	Reserved
				B9	Auto Tuning fail
				B8	Keypad Lost
				B7	Encoder miss-wiring
				B6	Encoder miss-installation
				B5	DB
				B4	FAN operation
				B3	Lost command
				B2	Inverter Overload
				B1	Underload
				B0	Overload
0h0335~ 0h033F	Reserved	-	-	-	
0h0340	On Time date	0	Day	Total number date of inverter power On	
0h0341	On Time minute	0	Min	Total minute except for total date of inverter On Time	
0h0342	Run Time date	0	Day	Total number day of inverter run	
0h0343	Run Time minute	0	Min	Total minute except for total day of Run Time	
0h0344	Fan Time date	0	Day	Total day of cooling fan run	
0h0345	Fan Time minute	0	Min	Total minute except for total day of Fan time	
0h0346	Reserved	-	-	-	
0h0347	Reserved	-	-	-	
0h0348	Reserved	-	-	-	

AKSA OTOMASYON
www.aksaotomasyon.com

Address	Parameter	Scale	unit	Allotment for Bits
0h0349	Reserved	-	-	-
0h034A	Option 1	-	-	0: None 1: Reserved 2: Reserved 3: Profibus, 4: Reserved 5: Reserved 6: Reserved 7: RNet, 8: Reserved 9: Reserved 10: PLC, 20: External IO-1 23: Encorder
0h034B	Option 2	-	-	
0h034C	Option 3			

AKSA OTOMASYON
www.aksaotomasyon.com

13.1.2 Inverter Control Area Parameter (Reading and Writing Available)

Address	Parameter	Scale	unit	Allotment for Bits	
0h0380	Frequency command	0.01	Hz	command frequency setting	
0h0381	RPM command	1	rpm	command RPM setting	
0h0382	Operating command	-	-	B7	Reserved
				B6	Reserved
				B5	Reserved
				B4	Reserved
				B3	0➔1: free run stop
				B2	0➔1: trip reset
				B1	0:reverse command 1:forward command
				B0	0:stop command 1:run command
				Ex) forward operatingcommand:0003h, reverse operatingcommand:0001h	
0h0383	Accelerating time	0.1	sec	Accelerating time setting	
0h0384	Decelerating timed	0.1	sec	Decelerating time setting	
0h0385	Virtual digital input control (0:Off, 1:On)	-	-	BI5	Virtual DI 16 (COM85)
				BI4	Virtual DI 15 (COM84)
				BI3	Virtual DI 14 (COM83)
				BI2	Virtual DI 13 (COM82)
				BI1	Virtual DI 12 (COM81)
				BI0	Virtual DI 11 (COM80)
				B9	Virtual DI 10 (COM79)

AKSA OTOMASYON
www.aksaotomasyon.com

Address	Parameter	Scale	unit	Allotment for Bits	
				B8	Virtual DI 9 (COM78)
				B7	Virtual DI 8 (COM77)
				B6	Virtual DI 7 (COM76)
				B5	Virtual DI 6 (COM75)
				B4	Virtual DI 5 (COM74)
				B3	Virtual DI 4 (COM73)
				B2	Virtual DI 3 (COM72)
				B1	Virtual DI 2 (COM71)
				B0	Virtual DI 1 (COM70)
0h0386	Digital output control (0:Off, 1:On)	-	-	BI5	Reserved
				BI4	Reserved
				BI3	Reserved
				BI2	Reserved
				BI1	Reserved
				BI0	Reserved
				B9	Reserved
				B8	Reserved
				B7	Reserved
				B6	Reserved
				B5	Q4 (extended I/O, OUT36:None)
				B4	Q3 (extended I/O, OUT35:None)
				B3	Q2 (extended I/O, OUT34:None)
				B2	Q1 (basic I/O, OUT33:None)

AKSA OTOMASYON
www.aksaotomasyon.com

Address	Parameter	Scale	unit	Allotment for Bits	
				B1	Relay2 (basic I/O, OUT32:None)
				B0	Relay1 (basic I/O, OUT31:None)
0h0387	Reserved	-	-	Reserved	
0h0388	PID reference	0.1	%	PID reference command released	
0h0389	PID feedback value	0.1	%	PID feedback value	
0h038A ~0h038F	Reserved	-	-	-	
0h0390	Torque Ref	0.1	%	torque command	
0h0391	Fwd Pos Torque Limit	0.1	%	forward motor ring torque limit	
0h0392	Fwd Neg Torque Limit	0.1	%	forward regenerative torque limit	
0h0393	Rev Pos Torque Limit	0.1	%	reverse motor ring torque limit	
0h0394	Rev Neg Torque Limit	0.1	%	reverse regenerative torque limit	
0h0395	Torque Bias	0.1	%	torque Bias	
0h0395 ~0h399	Reserved	-	-	-	
0h039A	Anytime Para	-	-	CNF-20 value setting (see page 13-40)	
0h039B	Monitor Line-1	-	-	CNF-21 value setting (see page 13-40)	
0h039C	Monitor Line-2	-	-	CNF-22 value setting (see page 13-40)	
0h039D	Monitor Line-3	-	-	CNF-23 value setting (see page 13-40)	

AKSA OTOMASYON
www.aksaotomasyon.com

13.1.3 Inverter Memory Control Area Parameter(Reading and Writing Available)

In this area, if the parameter is set, it is not only reflected in the inverter but saved. Parameters of other areas, if set by communication, are reflected in the inverter but not saved. If you turn off the inverter and turn it on again, the values set by communication are all deleted and the pre-setting values are saved. Therefore you should save the parameter before turning off the inverter after setting through communication. However, in this area, set parameter values are directly saved in the inverter without the need to save the parameter values.

Address	Parameter	Scale	unit	Shift during operation	Function
0h03E0 note1)	Parameter saving	-	-	X	0: No 1:Yes
0h03E1 note1)	Monitor mode initialization	-	-	O	0: No 1:Yes
0h03E2 note1)	Parameter initialization	-	-	X	0: No 1: All Grp 2: Drv Grp 3:BAS Grp 4: ADV Grp 5:CON Grp 6:IN Grp 7:OUT Grp 8: COM Grp 9:APP Grp 10:AUT Grp 11:APO Grp 12:PRT Grp 13:M2 Grp *no setting during trip
0h03E3	Changed parameter displayed	-	-	O	0: No 1:Yes
0h03E4	Macro function item	-	-	X	0:None 1: Draw App 2: Traverse
0h03E5 note1)	All history of failure deleted	-	-	O	0: No 1:Yes
0h03E6 note1)	User registration code deleted	-	-	O	0: No 1:Yes
0h03E7 note 2)	Parameter mode hidden	0	Hex	O	writing: 0 ~ 9999 reading: 0: Unlock 1:Lock
0h03E8 note 2)	Parameter editing locked	0	Hex	O	writing: 0 ~ 9999 reading: 0: Unlock 1:Lock

AKSA OTOMASYON
www.aksaotomasyon.com

Address	Parameter	Scale	unit	Shift during operation	Function
0h03E9	Initial parameter easy setting	-	-	O	0: No 1:Yes
0h03EA note1)	Consumed power initialization	-	-	O	0: No 1:Yes
0h03EB note1)	Cumulative inverter operating time initialization	-	-	O	0: No 1:Yes
0h03EC note1)	Cumulative cooling fan operating time initialization	-	-	O	0: No 1:Yes

note1) Be careful in setting parameters. Set parameters at 0 through communication and then set them at other values. If you input a value other than 0 while it is set at a value other than 0, an error message will respond.

If you read this parameter through communication, you will know the previously set values.

**The time required might be longer because the data is saved in the inverter, thus possibly interrupting the communication. Be careful when setting.

note 2) The parameters that input password. If you input password, the Lock status becomes Unlock status and the Unlock status becomes Lock status. If you consecutively input the same password, only the first parameter is implemented and the following values are not reflected. Therefore if you want to input the same value for another time, change it to another value and input the previous value again.

E.g.) Follow the order below if you want to input 244 twice.

244 -> 0 -> 244

AKSA OTOMASYON
www.aksaotomasyon.com

Warranty

Product Name	Profibus Option	Date of Installation	
Model Name	SV-iS7 Series	Warranty Period	
Customer	Name		
	Address		
	Phone Number		
Sales Agency	Name		
	Address		
	Phone Number		

Notes
This inverter has been manufactured by LSIS using strict quality control and inspection processes. The warranty period is 18 months from the date of installation. A period of 18 months from the date of manufacture will be applied if the date of installation has not been entered. However, the warranty period may vary according to the terms of the contract.

Free after-sales servicing
If the drive fails as a result of normal usage during the warranty period, contact our agency or designated service center. We will repair the drive free of charge.

Paid Servicing
In the following instances, repair services are provided for a fee: ▪ If the damage is the result of deliberate action or negligence. ▪ If the damage is the result of power supply problems or an improper connecting device. ▪ If the damage is the result of a natural disaster (for example, fire, flood, gas, earthquake, etc.). ▪ If the inverter has been modified or repaired somewhere other than our agency or service center. ▪ If there is no LSIS name plate attached. ▪ If the warranty period is over.

Please visit the LSIS homepage (http://www.lsis.biz) for more useful information and services:

AKSA OTOMASYON
www.aksaotomasyon.com

Manual Revision History

No.	Date of Publication	Contents Changed	Version Number	Remarks
1	First Edition		V1.0	

AKSA OTOMASYON
www.aksaotomasyon.com

제품을 사용하기 전에

먼저 저희 Profibus 옵션보드를 사용하여 주셔서 감사합니다.

안전상의 주의사항

- 안전상의 주의사항은 사고나 위험을 사전에 예방하여 제품을 안전하고 올바르게 사용하기 위한 것이므로 반드시 지켜주십시오.

- 주의사항은 '경고'와 '주의'의 두 가지로 구분되어 있으며 '경고'와 '주의'의 의미는 다음과 같습니다.

⚠ **경 고** 지시사항을 위반할 때 심각한 상해나 사망이 발생할 가능성이 있는 경우

⚠ **주 의** 지시사항을 위반할 때 경미한 상해나 제품손상이 발생할 가능성이 있는 경우

- 제품과 사용설명서에 표시된 그림기호의 의미는 다음과 같습니다.

⚠ 는 위험이 발생할 우려가 있으므로 주의하라는 기호 입니다.

⚠ 는 감전의 가능성이 있으므로 주의하라는 기호 입니다.

- 사용설명서를 읽고 난 후 사용하는 사람이 언제라도 볼 수 있는 장소에 보관 하십시오.

- Profibus 옵션보드의 기능을 충분하고 안전하게 사용하기 위하여 이 사용 설명서를 잘 읽어 보십시오.

⚠ 주 의

- **옵션보드의 CMOS 소자들의 취급에 주의하십시오.**
  정전기에 의한 고장의 원인이 됩니다.
- **통신 신호선 등의 변경 접속은 인버터 전원을 내린 상태에서 하십시오.**
  통신불량 및 고장의 원인이 됩니다.
- **인버터 본체와 옵션보드 커넥터가 정확히 일치하게 접속되도록 하십시오.**
  통신불량 및 고장의 원인이 됩니다.
- **파라미터를 설정할 때는 파라미터 unit 을 확인하시기 바랍니다.**
  통신불량의 원인이 됩니다.

1. 개요

1.1 소개

Profibus 옵션을 이용하여 SV-iS7 인버터를 Profibus 네트워크에 연결할 수 있습니다.
Profibus 옵션보드를 사용하면 인버터의 제어 및 모니터링이 PLC의 시퀀스 프로그램 또는 임의의 Master Module 에 의해 제어가 가능해 집니다.
하나의 통신 선으로 다수의 인버터가 접속 동작하므로 통신을 사용하지 않을 경우보다 설치 비용을 줄일 수 있습니다. 또한 배선이 간단하므로 설치 시간을 절감할 수 있고 유지 보수가 쉬워 집니다.

1.2 제품 구성

Profibus 옵션, 9 핀 커넥터 1 개, 고정용 나사(M3), 매뉴얼

2. 제품 규격

1.1. Profibus 옵션 기본 통신 규격

- Device Type : Profibus DP Slave
- Auto Baud Rate Detect : 지원
- Sync Mode : 지원
- Freeze Mode : 지원
- Max Input Length : 8 words
- Max Output Length : 8 words
- Max Data Length : 16 words
- Baud Rate Support : 9.6K, 19.2K, 93.75K, 187.5K, 500K, 1.5M, 3M, 6M, 12M
- Modular Station : 지원
- Max Module : 2
- Connectable Device : 한 Segment 당 최대 32 국

3. 외형 및 각부 명칭

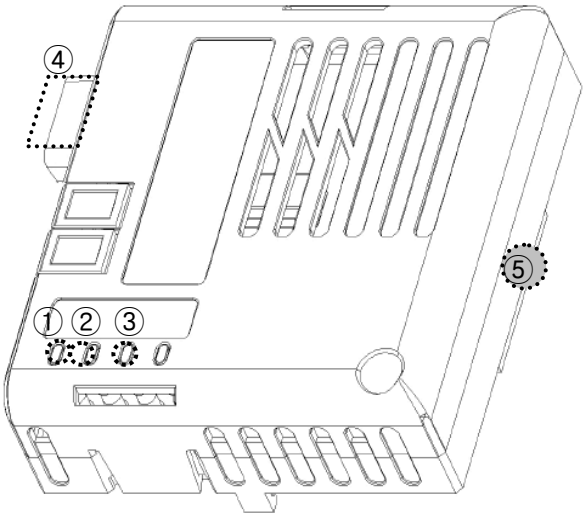

● 표시 LED

No.	명 칭	용 도
①	DATA_EX LED	Profibus가 Online상태가 되면 항시 켜집니다.
②	ERROR LED	옵션에 이상이 발생하면 점등 됩니다.
③	CPU LED	인버터에 옵션 보드를 장착 후 인버터에 전원을 공급하였을 경우 점등합니다.
④	통신연결 단자	Profibus통신 연결용 단자입니다.
⑤	인버터 연결 커넥터	인버터 본체와 연결 단자입니다.

※ 자세한 동작은 '7. 고장 처리'를 참조 하십시오.

● 통신선 연결단자

Pin No	신호	설명
1	Shield	보호 접지선
2	M24	24V 출력 GND
3	RxD/TxD-P	송수신 데이터 Plus
4	CTRL-P	리피터를 위한 제어 신호
5	DGND	신호 GND
6	VP	종단 저항을 위한 5V
7	P24	24V 출력 Plus
8	RxD/TxD-N	송수신 데이터 Negative
9	CTRL-N	리피터를 위한 제어 신호

주) 본 제품은 3,5,6,8번 신호만을 지원합니다.

4. 옵션 장착 방법

4.1 인버터 본체에 옵션 장착 방법

1) 전원을 off 합니다.

2) iS7의 전면 덮개를 분리하여 아래 그림과 같이 컨넥터를 연결 합니다

3) 동봉된 나사를 이용하여 본체에 고정합니다.

4) 인버터 전원을 투입하고 "CNF 31: Option-1 Type" 에서 Profibus가 인식 되는지 확인합니다.

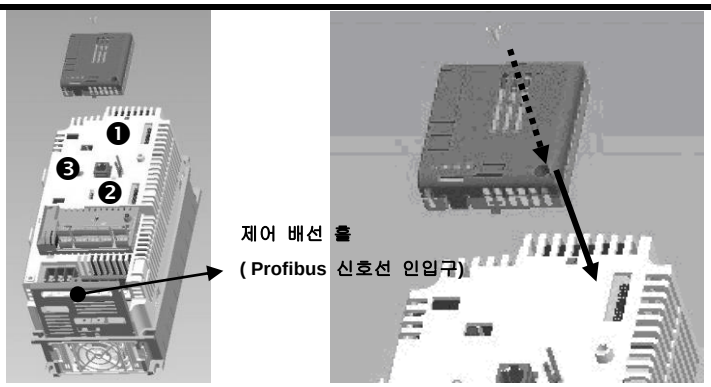

⚠ 주의

▶ 옵션 장착 및 제거 시에는 반드시 인버터 전원을 차단하십시오.
감전 및 고장의 위험이 있습니다.

알아두기

1) iS7 에는 옵션용 커넥터가 3개가 있으며, 전면 상부, 전면 하부, 좌측에 배치되어 각각 위 그림 과 같이 Option ❶ ❷ ❸으로 구분 되어 있습니다.
2) Profibus옵션의 경우 Option ❶ 커넥터에 연결하여 사용하십시오.
3) Profibus 신호선을 제어 배선 홀에 먼저 삽입한 후 연결 컨넥터 배선을 해주시기 바랍니다.

4.1 Profibus 신호선 연결 커넥터의 구조 및 커넥터 결선방법

1) 들어가는 선: 녹색선은 A1, 빨간색선은 B1에 연결합니다.
2) 나가는 선: 녹색선은 A2, 빨간색선은 B2에 연결합니다.
3) 실드는 커넥터의 클램프에 연결 합니다.
4) 커넥처를 종단에 설치시 케이블은 A1, B1에 설치하여 주십시오.

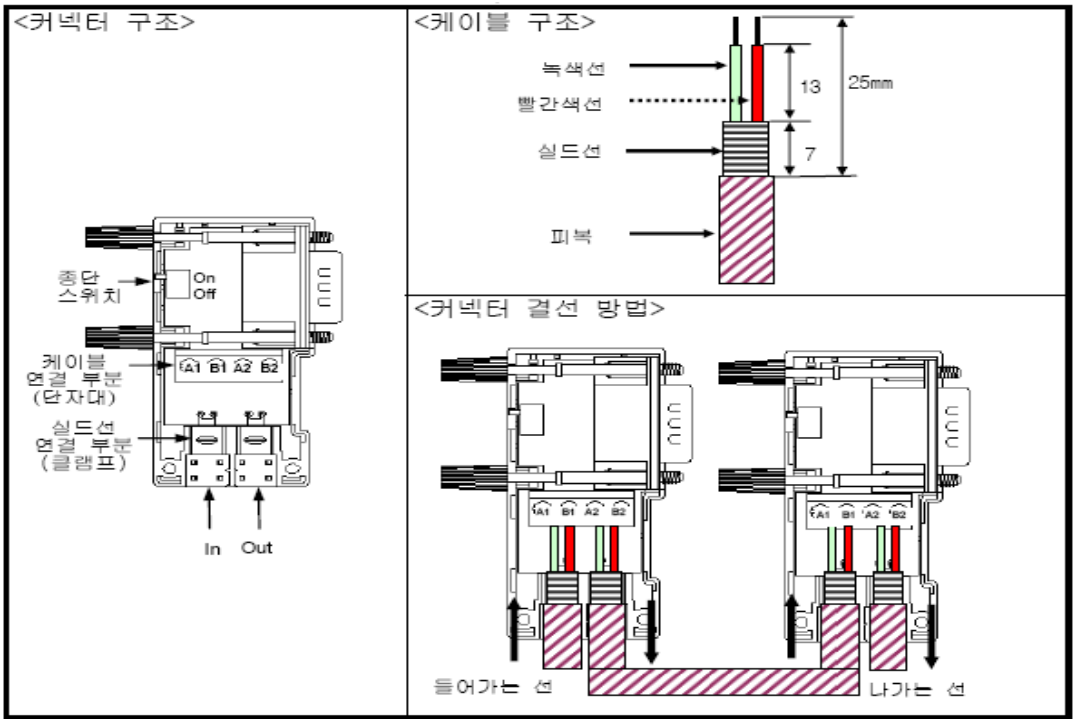

5. Profibus 파라미터

5.1 국번(Station Address) 설정

	최소값	최대값	KeyPad 상의 위치
Field Bus ID	0	125	COM 그룹의 07번

※ 국번(Station Address)은 Profibus Network에서 각 Node를 구별하는 고유의 값이므로 서로 다른 device가 같은 값을 공유할 수 없습니다. 키패드 조작을 통해 국번(Station Address)을 변경할 수 있습니다. 출하 시 이 값은 1로 되어 있습니다.

5.2 Status Data 개수 설정

출력 Data(인버터의 변수중 모니터할 변수)의 수를 정합니다.

	최소값	최대값	KeyPad 상의 위치
Para Status Num	0	8	COM 그룹의 30번

5.3 Control Data 개수 설정

입력 Data(인버터의 변수중 외부에서 지령을 내릴 변수)의 수를 정합니다.

	최소값	최대값	KeyPad 상의 위치
Para Ctrl Num	0	8	COM 그룹의 50번

5.4 출력 Data의 Address 설정

출력할 Data의 수만큼 Address 설정를 정합니다.

	최소값	최대값	KeyPad 상의 위치
Para Status 1~8	0h0000	0hFFFF	COM 그룹의 31~38번

5.5 입력 Data의 Address 설정

입력할 Data의 수만큼 Address 설정를 정합니다.

	최소값	최대값	KeyPad 상의 위치
Para Ctrl 1~8	0h0000	0hFFFF	COM 그룹의 51~58번

5.6 I/O 데이터 송수신

인버터의 키패드에서 설정한 Out Data는 Profibus Option Module을 통해 Profibus Master Module(PLC나 PC의 제어프로그램)로 전달됩니다. 반대로 Control Data는 Profibus Master

Module(PLC나 PC의 제어프로그램)으로부터 Profibus Option Module로 전달되고, Profibus Option Module에서 인버터로 전달됩니다.

5.6 Profibus 비트 Swap 설정

통신 시 전송되는 데이터의 LSB와 MSB 비트 Swap 여부를 설정합니다.
(사용하는 상위제어기가 Profibus 옵션 데이터의 LSB와 MSB를 반대로 읽는 경우 설정합니다.)

	설정값	KeyPad 상의 위치
FBus Swap Sel	0 : No 1 : Yes	COM 그룹의 68번

6. 기본 동작

인버터 전원을 올리거나 reset 이 발생했을 경우.

- 전원이 정상적으로 투입되면 CPU LED 가 깜빡입니다.
- 이상이 있으면 ERR LED 가 켜집니다.
- Keypad 를 이용하여 Configuration 을 합니다.
- 설정된 Configuration 대로 Master 국과 교신이 시작되면 Profibus 통신 상태 DATA_EX LED 가 꺼집니다.

6. 이상 동작 및 대책

제품의 아래 부분에 위치한 3개의 LED(DATA_EX,ERR,CPU)를 통해 device와 network의 상태를 나타냅니다. 각 LED의 표시 상태를 통해 현재의 상태를 알 수 있습니다.

6.1 DATA_EX LED 동작 및 이상 대책

LED	상 태	원 인	도 움
꺼짐	Off-Line	Master가 통신을 시작하지 않았을 경우	Master 에서 통신을 시작함.
		커넥터의 결선 이상	커넥터의 핀 번호와 종단 저항의 결선을 확인합니다.
		현 network안에 마스터가 없음	할당된 마스터가 없거나, 마스터 국에 문제가 있을 수 있습니다.
		국번 오류	Configuration Tool에서 LS산전 인버터의 Profibus용 Option Module에 할당한 국번과 Key Pad에서 지정한 국번이 동일하고, 네트워크 안에서 유일한지 확인합니다.
		Network Config에 문제가 있다.	Segment의 최대 길이를 초과하지 않았는지 확인합니다. Segment에 리피터를 포함하여 32국 이상이 연결되었는지 확인합니다. Network에 리피터를 포함하여 126국 이상이 연결되었는지 확인합니다.
켜짐	On-Line 상 태	Network,국번, Parameterization, Configuration모두 정상입니다.	

6.2 CPU LED 동작 및 이상 대책

LED	상 태	원 인	도 움
꺼짐	전원 공급 불량	인버터의 전원 불량/ 인버터와 옵션간의 접촉불량	인버터의 전원을 확인합니다. 인버터에 에러 상황이 있는지 확인합니다. 인버터와 연결하는 커넥터의 접속을 확인합니다.
1초 주기 점멸	정상	정상 동작.	

6.3 Error LED 동작 및 이상 대책

LED	상 태	원 인	도 움
꺼짐	정상	정상 동작	
1초 주기 점멸	인버터 옵션간 통신 ERROR	인버터와 옵션 사이의 통신 불가	옵션과 인버터 사이의 연결부분에 이상이 있는지 점검합니다. ※CPU LED와 같이 깜빡입니다.
약 1초 주기로 점멸	설정 오류 CONFIG ERROR	Master에서 Online상태를 만들었을 때 Master와 Profibus 옵션 설정 Configuration 이 다를 때	Master에 설정되어 있는 인버터의 Configuration 정보와 인버터 내의 Configuration 정보를 확인합니다. ※ Configuration Data: Status Data와 Control Data 개수입니다. ※CPU LED와 반대로 깜빡입니다.

7. 시스템 구성 및 전송 규격

7.1 종단 저항 설치 방법 및 규격

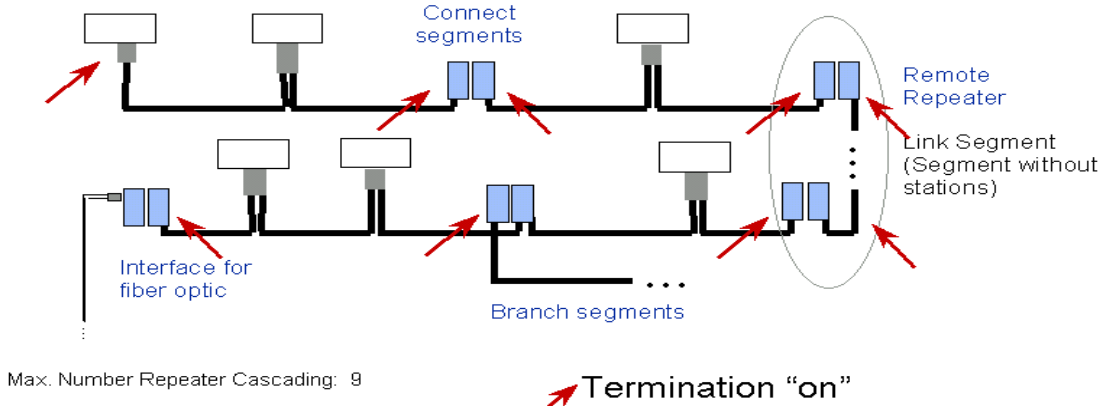

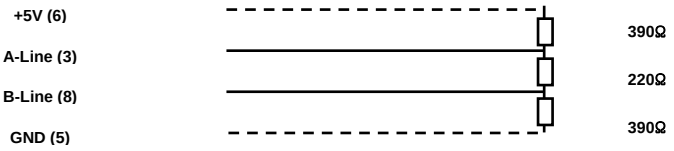

7.2 최대 전송 거리 규격

통신속도(Kbps)	최대 Segment 길이	최대 확장 거리
9.60	1000 m / 3278 feet	10000 m / 32786 feet
19.20	1000 m / 3278 feet	10000 m / 32786 feet
93.75	1000 m / 3278 feet	10000 m / 32786 feet
187.50	1000 m / 3278 feet	10000 m / 32786 feet
500.00	400 m / 1311 feet	4000 m / 13114 feet
1500.00	200 m / 655 feet	2000 m / 6557 feet
3000.00	100 m / 327 feet	1000 m / 3278 feet
6000.00	100 m / 327 feet	1000 m / 3278 feet
12000.00	100 m / 327 feet	1000 m / 3278 feet

8. 환경 설정 및 기타 기능

8.1 GSD 파일 (Electronic Data Sheets)

인버터의 Profibus Option Module에 대한 정보가 들어있는 파일입니다. Profibus Configuration Software에서 이 파일을 필요로 합니다. 반드시 iS7용 GSD파일을 사용하십시오.
해당 파일은 LS산전 홈페이지(http://www.lsis.biz)에서 다운로드 하실 수 있습니다.

- ► GSD파일 이름 : LSIS0A6C.GSD
- ► Version : 2.00
- ► ICON 파일 이름
  - Stop Icon : LSIS_INV_S.DIB
  - Run Icon : LSIS_INV_R.DIB
  - Diagnostic Icon : LSIS_INV_D.DIB
- ► Module = "9 Word Status Input Data" 0h58 에서
  Module = "16 Word Status Input Data" 0h5F 까지
  Module = "9 Word Control Output Data" 0h68 에서
  Module = "16 Word Control Output Data" 0h6F 까지
  는 지원하지 않습니다.

LSIS0A6C.GSD는 Master Configuration 프로그램에서 GSD파일을 넣어두는 폴더에 붙여 넣고ICON파일들은 ICON 저장 폴더에 붙여 넣으시면 됩니다.

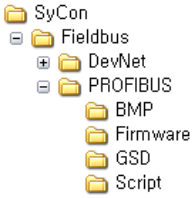

예) XGT에서 사용하는 Sycon일 경우

여기서 PROFIBUS 폴더 밑의 GSD에 LSIS0A6C.GSD를 붙여 넣고 BMP에 ICON파일들을 붙여 넣으면 됩니다.

8.2 User Parameter Setting

Cycon을 비롯하여 Profibus Master에서 Profibus 전용 User Parameter를 설정할 수 있습니다.

1). Data Word Format

인버터의 Data는 Word이며 Data전송 시에는 바이트로 분리하여 보내게 됩니다.
이때 MSB-LSB로 전송 할 것인지 LSB-MSB로 전송 할 것인지를 선택하게 됩니다.
초기 값은 MSB-LSB 입니다..

2). Config Data Update

마스터에서 인버터의 입출력 Data 개수를 강제로 설정할 것인가 아니면 Configuration Error 를 발생할 것인가를 결정합니다. 사용 안함 (Disable)과 사용(Enable))중에 선택하게 되는데 사용를 선택하면 마스터의 설정값이 인버터에 강제로 설정이 됩니다. 초기 값은 사용안함 (Disable)입니다. 인버터에서 설정한 입출력 Data개수와 마스터에서 설정된 입출력 Data 개수가 맞지 않으면 Config Err가 발생하게 됩니다. 통신 Test등을 할 때 사용(Enable)하여 인버터와 통신이 되는 것을 Test할 때 용의한 기능입니다.

8.3 Extended Diagnostic

Safety에 관련된 기능으로 인버터의 트립이 발생하거나 옵션에서 트립이 발생하였을 경우에 마스터에 Diagnostic를 발생시켜주는 기능입니다. 현재 정의된 Extended Diagnostic는 5가지 입니다.

1). Cannot Connect between the Main and the Option: 인버터와 옵션 간 통신이 통신 연결 불량
2). Inverter H/W Diag Trip: 인버터에서 Hardware Diagnostic Trip이 발생하였을 때 발생
3). Inverter Latch Type Trip: Latch Type의 Trip이 발생하였을 때 발생
4). Inverter Level Type Trip: Level Type의 Trip이 발생하였을 때 발생
5). Inverter Warning: Warning이 발생하였을 때 발생

9. 통신 파라미터

9.1 유럽형 인버터 전체 통신 파라미터 맵 구조

영역	주소	파라미터 종류
iS5시리즈 호환 공통영역	0h0000~0h00FF	
파라미터 등록 형태 영역	0h0100~0h01FF	COM Grp에 등록된 파라미터
	0h0200~0h023F	Usr Grp에 등록된 파라미터
	0h0240~0h027F	Macro Grp에 등록된 파라미터
	0h0280~0h02FF	Reserved
유럽형 공통영역	0h0300~0h037F	인버터 상태 (Read Only)파라미터
	0h0380~0h03FF	인버터 컨트롤 (Read/Write) 파라미터
	0h0400~0h0FFF	Reserved
키패드 파라미터 영역	0h1000	MAK Grp
	0h1100	DRV Grp
	0h1200	BAS Grp
	0h1300	ADV Grp

	0h1400	CON Grp
	0h1500	IN Grp
	0h1600	OUT Grp
	0h1700	COM Grp
	0h1800	APP Grp
	0h1900	AUT Grp
	0h1A00	APO Grp
	0h1B00	PRT Grp
	0h1C00	M2 Grp

9.2 주기적인 데이터 전송을 위한 파라미터 Group

통신 기능 그룹(COM)에서 등록한 어드레스를 이용하여 통신을 할 수 있습니다.

0h100 ~ 0h107 : 키패드 파라미터 COM그룹에서 Status Para #에 등록된 Inverter Status Parameter

0h110 ~ 0h117 : 키패드 파라미터 COM 그룹에서 Control Para #에 등록된 Inverter Control Paramter 나머지 영역 (0h108 ~ 0h10F, 0h117 ~ 0h1FF)은 Invalid address이다.

Address	Parameter	R/W	비트별 할당내용
0h0100	Status Paramter #1	R	COM-31에 등록된 파라미터 값
0h0101	Status Paramter #2	R	COM-32에 등록된 파라미터 값
0h0102	Status Paramter #3	R	COM-33에 등록된 파라미터 값
0h0103	Status Paramter #4	R	COM-34에 등록된 파라미터 값
0h0104	Status Paramter #5	R	COM-35에 등록된 파라미터 값
0h0105	Status Paramter #6	R	COM-36에 등록된 파라미터 값
0h0106	Status Paramter #7	R	COM-37에 등록된 파라미터 값
0h0107	Status Paramter #8	R	COM-38에 등록된 파라미터 값
0h108~0h10F	Invalid address		사용하지 않은 영역
0h0110	Control Paramter #1	R/W	COM-51에 등록된 파라미터 값
0h0111	Control Paramter #2	R/W	COM-52에 등록된 파라미터 값
0h0112	Control Paramter #3	R/W	COM-53에 등록된 파라미터 값
0h0113	Control Paramter #4	R/W	COM-54에 등록된 파라미터 값
0h0114	Control Paramter #5	R/W	COM-55에 등록된 파라미터 값
0h0115	Control Paramter #6	R/W	COM-56에 등록된 파라미터 값
0h0116	Control Paramter #7	R/W	COM-57에 등록된 파라미터 값
0h0117	Control Paramter #8	R/W	COM-58에 등록된 파라미터 값
0h118~0h1FF	Invalid address		사용하지 않은 영역

9.3 User 및 Macro Grp 전송을 위한 파라미터 Group

0h200 ~ 0h23F : 현재 등록된 User Grp 파라미터

Address	Parameter	비트별 할당내용
0h0200	User Grp. Code 1	U&M>USR->1 에 등록된 파라미터 값
0h0201	User Grp. Code 2	U&M>USR->2 에 등록된 파라미터 값
0h0202	User Grp. Code 3	U&M>USR->3 에 등록된 파라미터 값
0h0203	User Grp. Code 4	U&M>USR->4 에 등록된 파라미터 값
.	.	.
0h023C	User Grp. Code 61	U&M>USR->61 에 등록된 파라미터 값
0h023D	User Grp. Code 62	U&M>USR->62 에 등록된 파라미터 값

0h023E	User Grp. Code 63	U&M>USR->63 에 등록된 파라미터 값
0h023F	User Grp. Code 64	U&M>USR->64 에 등록된 파라미터 값

* User Grp에 등록되어 있지 않은 코드를 access하는 경우에는 "Illegal data address" error code "02"를 return 합니다.

9.4 0h240 ~ 0h27F : 현재 설정된 Macro Grp 파라미터

Address	Parameter	비트별 할당내용
0h0240	Macro Grp. Code 1	U&M>MC->1 에 등록된 파라미터 값
0h0241	Macro Grp. Code 2	U&M>MC->2 에 등록된 파라미터 값
0h0242	Macro Grp. Code 3	U&M>MC->3 에 등록된 파라미터 값
0h0243	Macro Grp. Code 4	U&M>MC->4 에 등록된 파라미터 값
.	.	.
0h024C	Macro Grp. Code 61	U&M>MC->61 에 등록된 파라미터 값
0h024D	Macro Grp. Code 62	U&M>MC->62 에 등록된 파라미터 값
0h024E	Macro Grp. Code 63	U&M>MC->63 에 등록된 파라미터 값
0h024F	Macro Grp. Code 64	U&M>MC->64 에 등록된 파라미터 값

* 현재 설정되어 있는 Macro크기 이상의 코드를 access하는 경우에는 "Illegal data address" error code "02"를 return합니다.

알아두기

1) 세부적인 인버터 통인 주소 및 기능은 iS7 본체 매뉴얼 제 11 장 '통신기능'을 참조하십시오.

12. 제품 크기

※ 옵션 사이즈

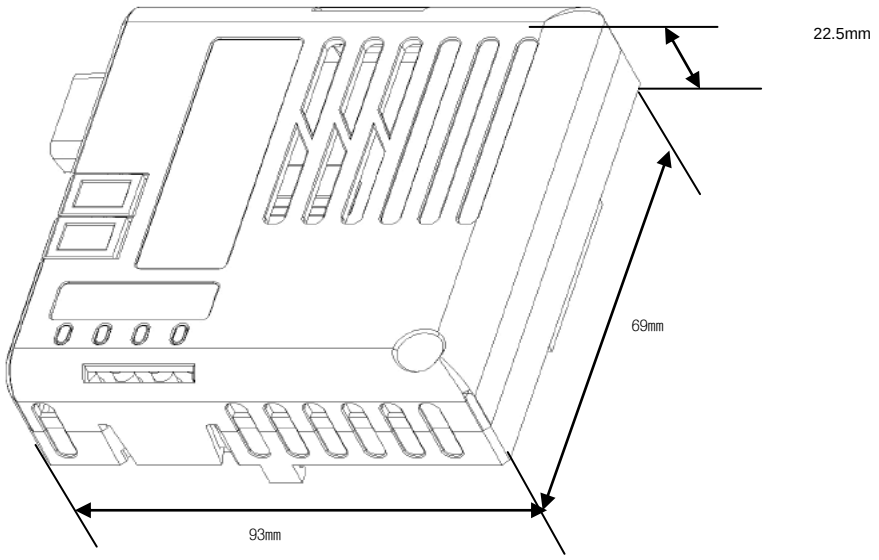

품 질 보 증 서

제품명	LS산전 통신옵션카드	설치 일자	
모델명	SV-iS7 Profibus 통신 카드	보증 기간	
고 객	성 명		
	주 소		
	전 화		
판매점	성 명		
	주 소		
	전 화		

알아두기

본 제품은 LS 산전 기술진의 엄격한 품질관리 및 검사과정을 거쳐서 만들어진 제품입니다. 제품 보증 기간은 통상 설치일로부터 12개월이며, 설치일자가 기입되지 않았을 경우에는 제조일로부터 18개월로 적용합니다. 단, 계약조건에 따라 변경 될 수 있습니다.

● 무상 서비스 안내

- 정상적인 사용상태에서 제품보증기간 이내에 고장이 발생했을 경우, 당사 특약점이나 지정 서비스 센터에 의뢰하시면 무상으로 수리하여 드립니다.

● 유상 서비스 안내

- 다음과 같은 경우에 유상 수리를 받아야 합니다.
- 소비자의 고의 또는 부주의로 고장이 발생한 경우
- 사용 전원의 이상 및 접속 기기의 불량으로 인해 고장이 발생한 경우
- 천재지변에 의해 고장이 발생한 경우(화재, 수해, 가스해, 지진등)
- LS 산전 명판이 부착되어 있지 않은 경우